City of Norman

Municipal Complex Renovation

Municipal Court

Norman, Oklahoma

Issued For Bidding
November 15, 2022

Technology Consultant
IP Design Group

Accessibility Consultant
The McIntosh Group, LLC

Court Consultant
Brinkley Sargent Wiginton

Civil Engineer
TriCore Group, LLC

Construction Manager at Risk
Crossland Construction Company, Inc.

Structural Engineer
Kirkpatrick Forest Curtis, P.C.

MEP Engineer
HP Engineering

Owner
The City of Norman

Architect
The McKinney
Partnership Architects, P.C.

Program Manager
ADG

THE MCKINNEY
PARTNERSHIP
architects

Abbreviations

A	AMP
ABV	ABOVE
A/C	AIR CONDITIONING
ACOUS	ACOUSTICAL
ACT	ACOUSTICAL TILE
ADD	ADDENDUM
ADJ	ADJACENT, ADJUSTABLE
AFF	ABOVE FINISH FLOOR
ALT	ALTERNATE
ALUM	ALUMINUM
ANOD	ANODIZED
ARCH	ARCHITECT(URAL)
BD	BOARD
BLDG	BUILDING
BLKG	BLOCKING
BM	BEAM
BOT	BOTTOM
BRG	BEARING
BRG PL	BEARING PLATE
BSMT	BASEMENT
BUR	BUILT UP ROOFING
CAB	CABINET
CIP	CAST IN PLACE
CJ	CONTROL JOINT
CLG	CEILING
CLO	CLOSET
CLR	CLEAR(ANCE)
CMU	CONCRETE MASONRY UNIT
CNTR	COUNTER
COL	COLUMN
CONC	CONCRETE
CONST	CONSTRUCTION
CONT	CONTINUOUS
CORR	CORRUGATED
CPT	CARPET
CT	CERAMIC TILE
CTR	CENTER
CW	COLD WATER
D	DEEP, DEPTH
DBL	DOUBLE
DEMO	DEMOLITION
DF	DRINKING FOUNTAIN
DIA	DIAMETER
DIM	DIMENSION
DN	DOWN
DR	DOOR
DS	DOWN SPOUT
DTL	DETAIL
DWG	DRAWING
EA	EACH
EJ	EXPANSION JOINT
ELEC	ELECTRIC(AL)
ELEV	ELEVATION, ELEVATOR
EMER	EMERGENCY
ENGR	ENGINEER
EQ	EQUAL
EQUIP	EQUIPMENT
EST	ESTIMATE
EW	EACH WAY
EWC	ELECTRIC WATER COOLER
EXH	EXHAUST
EXIST	EXISTING
EXP	EXPANSION
EXT	EXTERIOR
FD	FLOOR DRAIN
FEC	FIRE EXTINGUISHER CABINET
FHC	FIRE HOSE CABINET
FIN	FINISH
FLR	FLOOR
FLUOR	FLUORESCENT
FND	FOUNDATION
FT	FOOT
FTG	FOOTING
FURR(G)	FURRED(ING)
FF	FINISHED FLOOR
GA	GAGE, GAUGE
GAL	GALLON
GALV	GALVANIZED
GB	GRAB BAR
GEN	GENERAL
GI	GALVANIZED IRON
GLS	GLASS, GLAZING
GLS BL	GLASS BLOCK
GWB	GYPSUM WALL BOARD
GYP	GYPSUM
HB	HOSE BIB
HC	HOLLOW CORE, HANDICAP
HD	HEAVY DUTY
HDR	HEADER
HDW	HARDWARE
HD WD	HARDWOOD
HM	HOLLOW METAL
HORIZ	HORIZONTAL
HR	HOUR
HT	HEIGHT
HTG	HEATING
HVAC	HEATING/VENTILATING AIR CONDITIONING
HW	HOT WATER
ID	INSIDE DIAMETER
IN	INCH
INCAN	INCANDESCENT
INCL	INCLUDE(D)
INFO	INFORMATION
INSUL	INSULATION
INT	INTERIOR
JT	JOINT
LAM	LAMINATE
LAV	LAVATORY
LT	LIGHT
LT WT	LIGHTWEIGHT
MAS	MASONRY
MAT	MATERIAL(S)
MAX	MAXIMUM
MBR	MEMBER
MECH	MECHANIC(AL)
MFG	MANUFACTURE(ER)
MH	MAN HOLE
MIN	MINIMUM
MISC	MISCELLANEOUS
MNT	MOUNT(ED)(ING)
MO	MASONRY OPENING
MOD	MODULAR
MTL	METAL
MTL FUR	METAL FURRING
MULL	MULLION
NA	NOT APPLICABLE
NIC	NOT IN CONTRACT
NOM	NOMINAL
NTS	NOT TO SCALE
OA	OVERALL
OC	ON CENTER
OD	OUTSIDE DIAMETER
OH	OVERHEAD
PART	PARTITION
PH	PHASE
PKT	POCKET
PL	PLATE
PLAS	PLASTER
PLAS LAM	PLASTIC LAMINATE
PNL	PANEL
PR	PAIR
PSF	POUNDS/SQUARE FOOT
PSI	POUNDS/SQUARE INCH
PVC	POLYVINYL CHLORIDE
PVMT	PAVEMENT
PWD	PLYWOOD
QT	QUARRY TILE
R	RADIUS, RISE(R)
RA	RETURN AIR
RD	ROOF DRAIN
REC	RECESS(ED)
REF	REFER
REFR	REFRIGERATOR
REG	REGISTER
REINF	REINFORCE(D)(ING)
REQD	REQUIRED
REV	REVISION
RH	RIGHT HAND
RM	ROOM
RO	ROUGH OPENING
ROW	RIGHT OF WAY
R&S	ROD & SHELF
SA	SUPPLY AIR
SC	SOLID CORE
SCHED	SCHEDULE
SECT	SECTION
SHT	SHEET
SIM	SIMILAR
SPEC	SPECIFICATION(S)
SPKR	SPEAKER
SQ	SQUARE
SS	STAINLESS STEEL, SANITARY SEWER
STD	STANDARD
STL	STEEL
STO	STORAGE
STRUC	STRUCTURE(AL)
SUSP	SUSPENDED
SURF	SURFACE
T	TREAD
TB	TOWEL BAR
TD	TOWEL DISPENSER
TD/D	TOWEL DISPENSER/DISPOSAL
TELE	TELEPHONE
TEMP	TEMPER(ED)
T&G	TONGUE & GROOVE
THK	THICK(NESS)
TV	TELEVISION
TYP	TYPICAL
T&B	TOP & BOTTOM
UON	UNLESS OTHERWISE NOTED
V	VOLT
VERT	VERTICAL
VCT	VINYL COMPOSITE TILE
WP	WATERPROOFING
WT	WEIGHT
WWF	WELDED WIRE FABRIC
@	AT
W/	WITH

Legend:

EARTH
SAND
CONCRETE
WOOD FRAMING
WOOD BLOCKING
STEEL
BRICK
PLASTER / STUCCO
SUSP. ACOUSTIC CLG.
BATT INSULATION
WOOD
PLYWOOD
GYPSUM WALL BD
CMU

Contacts:

OWNER/TENANT
THE CITY OF NORMAN
P.O. BOX 370
NORMAN, OK 73070
405-366-5405
ATTN: BRENDA HALL, CITY CLERK
Brenda.Hall@NormanOK

PROGRAM MANAGER
ADG
920 W. MAIN ST.
OKLAHOMA CITY, OK 73106
405-323-5700
ATTN: RANDY W. HILL
rhill@adgokc.com

CONSTRUCTION MANAGER
CROSSLAND CONSTRUCTION CO. INC.
408 NE 145TH PLACE
OKLAHOMA CITY, OK 73013
405-748-5043
ATTN: BLAKE MADDEN
bmadden@crossland.com

ARCHITECT
THE MCKINNEY PARTNERSHIP ARCHITECTS
3600 WEST MAIN, SUITE 200
NORMAN, OK. 73072
405-360-1400
ATTN: GREG WARD, AIA, LEED AP
gward@tmparch.com

STRUCTURAL ENGINEERING
KFC ENGINEERING
525 CENTRAL PARK DR.,
SUITE 202
OKLAHOMA CITY, OK 73105
405-528-4596
ATTN: JEFF SEARS, PE
jsears@kfcengr.com

CIVIL ENGINEERING
TRICORE GROUP, LLC
405-250-3921
ATTN: GREG VANCE, PE
greg@tricoregrp.com

MEP ENGINEERING
HP ENGINEERING
205 NW 63RD STREET, SUITE 100
OKLAHOMA CITY, OK 73116
405-286-9945
ATTN: RAY POWELL, PE (MECHANICAL)
rpowell@hpengineering.com
DANIEL RIZIK, PE (ELECTRICAL)
drizik@hpengineering.com

TECHNOLOGY ENGINEERING
IP DESIGN GROUP
1201 CASS STREET
OMAHA, NEBRASKA 68102
402-346-7007
ATTN: CAMERON GILINSKY
cgilinsky@ipdesigngroup.com

COURT DESIGN CONSULTANT
BRINKLEY SARGENT WIGINTON ARCHITECTS
5000 QUORUM DRIVE, SUITE 600
972-960-9970
ATTN: GREG READ, AIA
GRead@bsw-architects.com

General Notes

1. ALL CONSTRUCTION SHALL MEET ALL APPLICABLE NATIONAL, STATE, AND LOCAL BUILDING CODES LATEST EDITIONS.
2. DO NOT SCALE FROM PLANS
3. BUILDING PERMITS SHALL BE OBTAINED BY ARCHITECT AND PAID FOR BY OWNER. TRADE PERMITS SHALL BE OBTAINED AND PAID FOR BY THE CONTRACTOR.
4. ANY CHANGES IN THE CONSTRUCTION FROM THE ORIGINAL PLANS AND SPECIFICATIONS SHALL BE APPROVED BY ARCHITECT, NOTED AND INITIALED IN RED PENCIL ON A SET LOCATED IN THE CONSTRUCTION OFFICE. ALL MAJOR SUBCONTRACTORS SHALL ALSO DOCUMENT CHANGES IN RED PENCIL AND SUBMIT TO THE ARCHITECT AT THE COMPLETION OF THE WORK FOR PREPARATION OF AS-BUILT CONSTRUCTION PLANS. MEP / STRUCTURAL / SUB CONTRACTORS TO PROVIDE AUTOCAD SUBMITTALS & AS-BUILT DRAWINGS TO ARCHITECT.
5. ANY DISCREPANCIES OR INCONGRUITIES IN THESE CONSTRUCTION PLANS OR BETWEEN THE PLANS AND SPECIFICATIONS SHALL BE SUBMITTED TO THE ARCHITECT IN WRITING PRIOR TO COMMENCING WITH THAT PORTION OF WORK.
6. ALL SUBCONTRACTORS SHALL EXAMINE THE AREAS, CONDITIONS, AND SUBSTRATES UNDER WHICH HIS WORK IS TO BE INSTALLED AND SHALL NOTIFY THE CONTRACTOR OF UNSATISFACTORY CONDITIONS. UNSATISFACTORY CONDITIONS SHALL BE CORRECTED IN A MANNER ACCEPTABLE TO THE OWNER.
7. CONTRACTORS SHALL SUBMIT ALL INSURANCE CERTIFICATES TO THE OWNER PRIOR TO COMMENCING WITH WORK. WAIVERS OF LIENS MUST BE FURNISHED BY ALL CONTRACTORS, SUBCONTRACTORS, AND MAJOR MATERIAL SUPPLIERS UPON FINAL PAYMENT.
8. CONTRACTOR SHALL SUBMIT FINAL FIRE SPRINKLER SHOP DRAWING TO THE AUTHORITY HAVING JURISDICTION FOR FINAL REVIEW AND COMMENTS.
9. CONTRACTOR SHALL SUBMIT FINAL FIRE ALARM SHOP DRAWINGS TO THE AUTHORITY HAVING JURISDICTION FOR FINAL REVIEW AND COMMENTS.
10. ALL APPROVED PLANS MUST BE AVAILABLE AT THE CONSTRUCTION SITE FOR INSPECTION PROCESS.
11. ALL WOOD BLOCKING TO BE FIRE RETARDANT TYPE.
12. PROVIDE RAISED BRAILLE EXIT SIGNS AND ACCESSIBLE TOILET SIGNS.
13. PROVIDE OCCUPANT LOAD SIGNAGE IN JURY POOL 107, COURT "A" 118, COURT "B" 140, JURY 120. POST THE SIGN IN A CONSPICUOUS PLACE, NEAR THE MAIN EXIT OR EXIT ACCESS DOORWAY FROM THE ROOM OR SPACE, COORDINATE WITH ARCHITECT.
14. CODE INFORMATION IS LOCATED ON SHEET LSF1.0.

Symbols Legend

Elevation
AFF (Above Finished Floor)
Property Line
Center Line
Number / Sheet Number — Building Section, Wall Section Reference
Number / Sheet Number — Building Section Reference
Number / Sheet Number — Building Elevation Reference
Number / Sheet Number — Detail Reference
ROOM NAME — Room Name
XXX — Room Number
XXX — Door Number
X — Window Number
1 — Wall Partition Type
X/AX.X — Interior Elevation

Vicinity Map

BUILDING SITE LOCATION –

CITY OF NORMAN MUNICIPAL COMPLEX
MUNICIPAL COURT
321 N. WEBSTER AVE.
LEGAL DESCRIPTION
NORMAN OT LOTS 1 THRU 32 BLK 74

NORTH

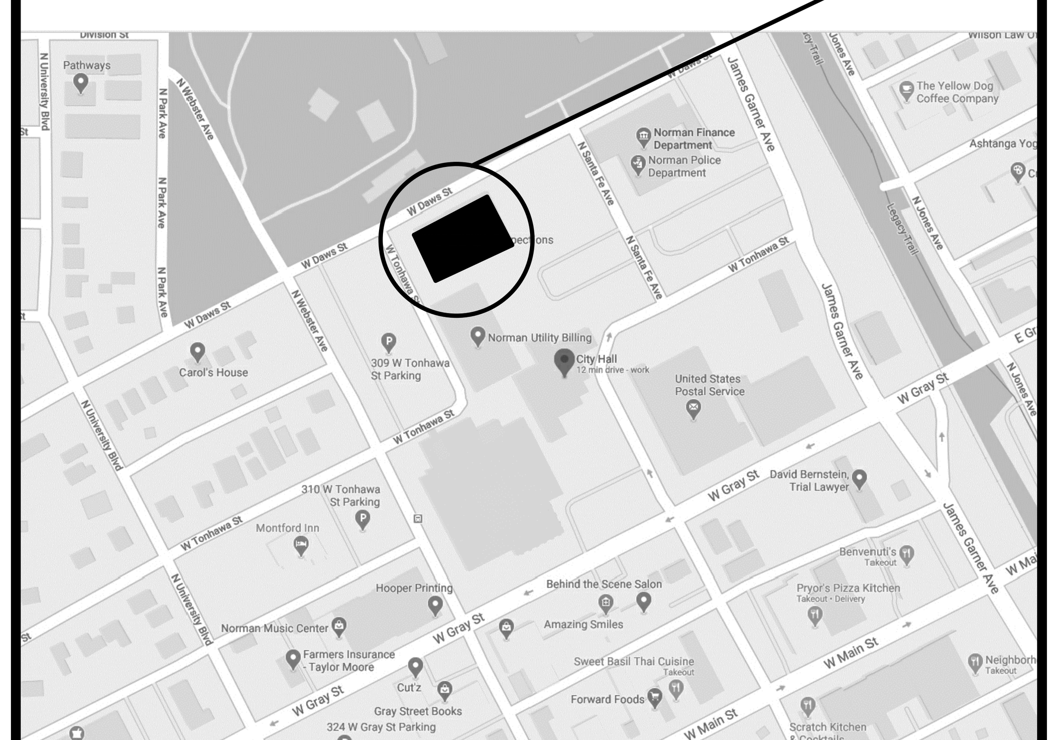

Index of Drawings

GENERAL INFORMATION	
A0.0	PROJECT INFORMATION
A0.1	PARTITION TYPES
A0.2	ACCESSIBLE FIXTURES AND MOUNTING / TOILET ACCESSORY SCHEDULE
A0.3	EXISTING SITE SURVEY
CIVIL	
C-101	UTILITY PLAN
C-201	TYPICAL DETAILS
C-202	TYPICAL DETAILS
STRUCTURAL	
S1.1	GENERAL NOTES
S1.2	SPECIAL INSPECTION
S2.0	OVERALL PLAN
S2.1	FOUNDATION AND FRAMING PLAN
S3.0	FRAMING ELEVATIONS
S4.1	FOUNDATION DETAILS
S5.1	FRAMING DETAILS
LANDSCAPE	
L1.0	LANDSCAPE PLAN
L1.1	LANDSCAPE DETAILS
ARCHITECTURAL	
LSF1.0	LIFE SAFETY PLAN/CODE REVIEW
D1.0	DEMOLITION SITE PLAN
D2.0	DEMOLITION ELEVATIONS
D3.0	DEMOLITION FLOOR PLAN
D4.0	DEMOLITION ROOF PLAN
D5.0	DEMOLITION FLOOR PLAN-EXISTING MUNICIPAL COURT
A1.0	SITE PLAN
A1.1	SITE PLAN DETAILS
A1.2	SITE PLAN DETAILS
A2.0	FLOOR PLAN
A2.1	DIMENSIONAL PLAN
A2.2	ENLARGED PLANS
A2.3	ENLARGED PLANS
A2.4	ENLARGED PLANS
A2.5	ENLARGED PLANS
A2.6	ENLARGED PLANS
A3.0	REFLECTED CEILING PLAN
A3.1	CEILING DETAILS
A4.0	ROOF PLAN
A5.0	EXTERIOR ELEVATIONS
A5.1	ENLARGED EXTERIOR ELEVATIONS
A5.2	ENLARGED EXTERIOR ELEVATIONS
A6.0	BUILDING SECTIONS
A6.1	WALL SECTIONS / DETAILS
A6.2	DETAILS
A7.0	INTERIOR ELEVATIONS
A7.1	INTERIOR ELEVATIONS
A7.2	INTERIOR ELEVATIONS
A7.3	INTERIOR ELEVATIONS
A7.4	INTERIOR ELEVATIONS
A7.5	INTERIOR ELEVATIONS
A7.6	INTERIOR ELEVATIONS
A8.0	DOOR AND WINDOW SCHEDULE / DOOR AND WINDOW ELEVATIONS
A8.1	DOOR HARDWARE SCHEDULE
A8.2	DOOR DETAILS
A8.3	DOOR DETAILS
A9.0	FINISH SCHEDULE / DETAILS
A9.1	FLOOR FINISH PLAN
A9.2	WALL FINISH PLAN
A10.0	MILLWORK SECTIONS
A10.1	MILLWORK SECTIONS
A10.2	MILLWORK SECTIONS
A10.3	MILLWORK SECTIONS

MECHANICAL	
M0.1	MECHANICAL LEGENDS AND ABBREVIATIONS
MD1.1	MECHANICAL DEMOLITION PLAN
MD1.2	MECHANICAL PIPING DEMOLITION PLAN
M1.1	HVAC PLAN
M1.2	MECHANICAL PIPING PLAN
M1.5	MECHANICAL ROOF PLAN
M5.1	MECHANICAL DETAILS
M5.2	MECHANICAL DETAILS
M5.3	MECHANICAL DETAILS
M6.1	MECHANICAL SCHEDULES
ELECTRICAL	
E0.1	ELECTRICAL NOTES AND LEGEND
ED1.1	ELECTRICAL DEMO PLAN
E1.1	ELECTRICAL POWER PLAN
E1.2	ELECTRICAL EQUIPMENT PLAN
E1.3	ELECTRICAL ROOF PLAN
E2.1	ELECTRICAL LIGHTING PLAN
E2.2	ELECTRICAL LIGHTING SCHEDULE
E3.1	ELECTRICAL RISER DIAGRAM
E3.2	ELECTRICAL SCHEDULES
E4.1	ELECTRICAL DETAILS
E4.2	FIRE ALARM
PLUMBING	
P0.1	PLUMBING LEGENDS AND ABBREVIATIONS
P1.1	PLUMBING WASTE & VENT PLAN
P2.1	PLUMBING SUPPLY PLAN
P3.1	ENLARGEMENTS – PLUMBING
P4.1	DETAILS – PLUMBING
P4.2	DETAILS – PLUMBING
P4.3	DETAILS – PLUMBING
P6.1	PLUMBING SCHEDULES
FIRE PROTECTION	
FP0.1	FIRE PROTECTION TITLE SHEET
FP1.1	FLOOR PLAN – FIRE PROTECTION
TECHNOLOGY	
T0.0	TELECOM SYMBOLS AND ABBREVIATIONS
TD1.1	FIRST FLOOR DEMO PLAN-TELECOM
T1.1	FLOOR PLAN-TELECOM
T2.0	ENLARGED FLOOR PLANS-TELECOM
T3.0	RISERS-TELECOM
T3.1	RISERS-TELECOM
T4.0	DETAILS-TELECOM
T4.1	DETAILS-TELECOM
T4.2	DETAILS-TELECOM
T4.3	DETAILS-TELECOM
T4.4	DETAILS-TELECOM
T4.5	DETAILS-TELECOM
T5.0	SCHEDULES-TELECOM
T5.1	SCHEDULES-TELECOM

Description of Scope

REMODEL OF EXISTING APPROX. 15,000 S.F. FORMER "BUILDING A" FOR A NEW MUNICIPAL COURT BUILDING FOR THE CITY OF NORMAN. THE NEW FACILITY WILL CONSIST OF COURT AND JURY SPACES, OFFICES AND MEETING AREAS. INTERIOR WORK INCLUDES A COMPLETE RENOVATION OF THE INTERIOR AND INSTALLATION OF A FIRE SPRINKLER SYSTEM. NETWORK, A/V, AND SECURITY ARE BY THE G.C. THE EXTERIOR IS TO REMAIN WITH THE EXCEPTION OF A NEW MAIN ENTRY ELEMENT, MISC. AND NEW WINDOWS/DOORS. SITE WORK INCLUDES SIDEWALK MODIFICATIONS & SITE IMPROVEMENTS.

ADD ALTERNATE #1-REPLACE RECEPTIONIST & PAY STATIONS PLAM COUNTERS IN WITH QUARTZ COUNTERS

THE MCKINNEY PARTNERSHIP
architects
3600 West Main
Suite 200
Norman, Oklahoma
73072
405.360.1400 p
405.364.8287 f
tmparch.com

Copyright © 2008 The McKinney Partnership Architects, P.C., All Rights Reserved

Seal:

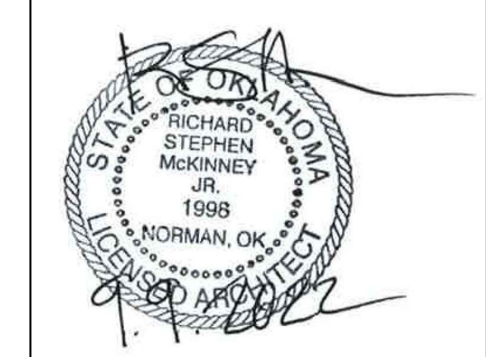

Project:
City of Norman
Municipal Complex Renovation
Municipal Court
321 N. Webster Avenue
Norman, OK

Issue Date:
11/15/22 ISSUED FOR BIDDING

Revisions:

Project Number:
CM083319

Sheet Title:
PROJECT INFORMATION

Sheet Number:
A0.0

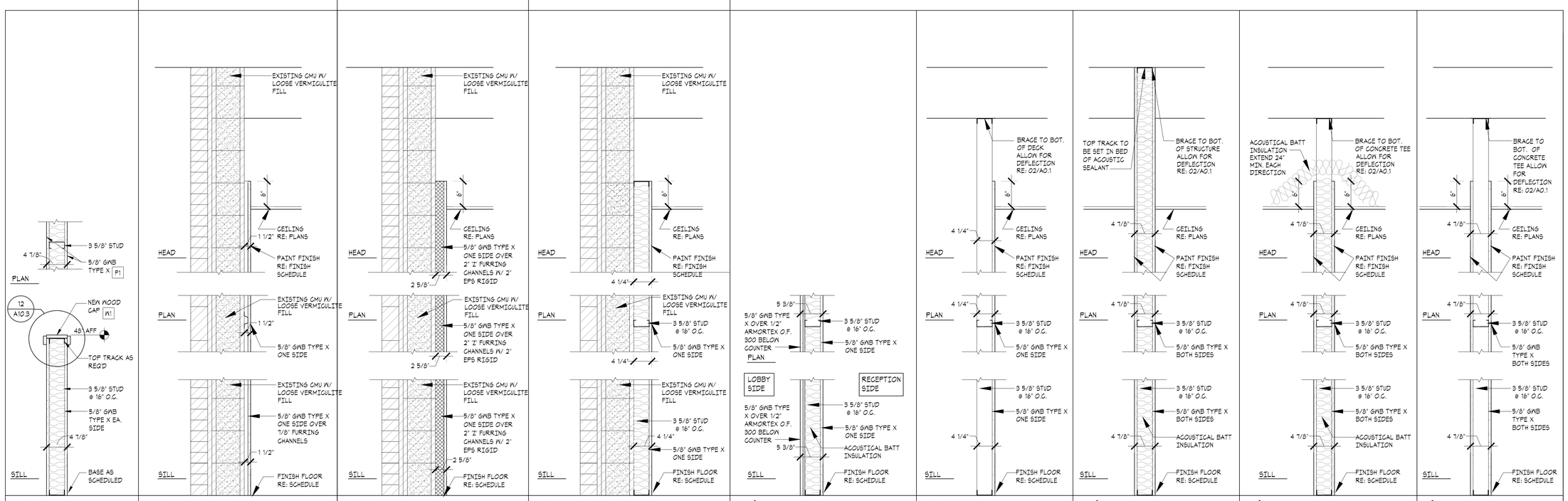

12 INTERIOR FURRING PARTITION: 3 5/8" METAL STUDS AT 16" O.C. WITH 5/8" TYPE X GWB ONE SIDE TO DECK - ALLOW FOR DEFLECTION AT HEAD

11 INTERIOR PARTITION (STC 56): 3 5/8" METAL STUDS AT 16" O.C. WITH (2) LAYERS OF 5/8" TYPE X GWB ONE SIDE AND (3) LAYERS 5/8" GWB ON COURTROOM SIDE W/ACOUSTICAL BATT INSULATION TO DECK CEILING - ALLOW FOR DEFLECTION AT HEAD

10 INTERIOR PARTITION (STC 50): 3 5/8" METAL STUDS AT 16" O.C. WITH 5/8" TYPE X GWB ONE SIDE AND (2) LAYERS 5/8" GWB ON COURTROOM SIDE W/ACOUSTICAL BATT INSULATION TO DECK CEILING - ALLOW FOR DEFLECTION AT HEAD

9 PARTIAL HT. INTERIOR PARTITION 3 5/8" METAL STUDS AT 16" O.C. WITH 5/8" TYPE X GWB EA. SIDE - INSULATE WALL FOR SOUND

8 INTERIOR FURRING PARTITION: 5/8" TYPE X GWB ONE SIDE OVER NEW 1/8" FURRING CHANNELS ON EXISTING CMU TO 6" ABOVE FINISHED CEILING - RUN 1/8" FURRING CHANNELS VERTICALLY ON WALL IN ORDER TO RUN CONDUIT DOWN WALL.

7 INTERIOR FURRING PARTITION: 5/8" GWB TYPE X ONE SIDE OVER 2" 'Z' FURRING CHANNELS W/ 2" EPS RIGID INSULATION TO 6" ABOVE FINISHED CEILING

6 INTERIOR FURRING PARTITION: 3 5/8" METAL STUDS AT 16" O.C. WITH 5/8" TYPE X GWB ONE SIDE TO 6" ABOVE FINISHED CEILING - INSULATE WALL WITH R13 BATT INSULATION - ALLOW FOR DEFLECTION AT HEAD

5 INTERIOR BALLISTIC PARTITION: 3 5/8" METAL STUDS AT 16" O.C. WITH 5/8" TYPE X GWB RECEPTION SIDE AND 5/8" TYPE X GWB LOBBY SIDE OVER 1/2" ARMORTEX UL 752 LEVEL 3 OPAQUE FIBERGLASS BELOW COUNTER-INSULATE WALL FOR SOUND -

4 INTERIOR FURRING PARTITION: 3 5/8" METAL STUDS AT 16" O.C. WITH 5/8" TYPE X GWB ONE SIDE TO 6" ABOVE FINISHED CEILING - ALLOW FOR DEFLECTION AT HEAD

4A INTERIOR FURRING PARTITION: 3 5/8" METAL STUDS AT 16" O.C. WITH 5/8" TYPE X GWB ONE SIDE - TO 6" ABOVE FINISHED CEILING- ALLOW FOR DEFLECTION AT HEAD - INSULATE WALL FOR SOUND

4B INTERIOR FURRING PARTITION: 3 5/8" METAL STUDS AT 16" O.C. WITH 5/8" TYPE X GWB ONE SIDE - TO DECK ABOVE - ALLOW FOR DEFLECTION AT HEAD - INSULATE WALL FOR SOUND

3 INTERIOR PARTITION: 3 5/8" METAL STUDS AT 16" O.C. WITH 5/8" TYPE X GWB EA. SIDE TO DECK ABOVE - INSULATE WALL FOR SOUND - ALLOW FOR DEFLECTION AT HEAD - STC 46, NGC 2018106

3A INTERIOR PARTITION: 3 5/8" METAL STUDS AT 16" O.C. WITH 5/8" TYPE X GWB EA. SIDE TO DECK ABOVE - ALLOW FOR DEFLECTION AT HEAD

3B INTERIOR PARTITION: 6" METAL STUDS AT 16" O.C. WITH 5/8" TYPE X GWB EA. SIDE TO DECK ABOVE - INSULATE WALL FOR SOUND - ALLOW FOR DEFLECTION AT HEAD - STC 44, NGC 2018130

2 INTERIOR PARTITION: 3 5/8" METAL STUDS AT 16" O.C. WITH 5/8" TYPE X GWB EA. SIDE TO 6" ABOVE FINISH CEILING - INSULATE WALL FOR SOUND - ALLOW FOR DEFLECTION AT HEAD

1 INTERIOR PARTITION: 3 5/8" METAL STUDS AT 16" O.C. WITH 5/8" TYPE X GWB EA. SIDE TO 6" ABOVE FINISH CEILING- ALLOW FOR DEFLECTION AT HEAD

01 PARTITION TYPES
SCALE: N.T.S.

NOTES:

INSTALL 5/8" REINFORCED CEMENT UNDERLAYMENT BOARD BEHIND ALL TILE ON WALLS - REFER PLANS FOR LOCATIONS

RUNNERS TO BE SET IN BED OF ACOUSTIC SEALANT AT ALL AREAS (HEAD & SILL).

CONTRACTOR TO PROVIDE SOLID, CONTINUOUS, FIRE RATED WOOD BLOCKING FOR ALL MILLWORK, ACCESSORIES AND OTHER MISCELLANEOUS ASSEMBLIES REQUIRING BLOCKING

DIAGONAL KICKERS ARE ACCEPTABLE TO BRACE WALLS NOT SHEETROCKED TO DECK.

PROVIDE 5/8" TYPE X M.R. SHEETROCK AT ALL WET AREAS.

PROVIDE FR WOOD BLOCKING AT ALL WALL MOUNTED VIDEO MONITOR LOCATIONS.

REFER STRUCTURAL SHEET S4.1 FOR INTERIOR OPENING FRAMING SCHEDULE.

THE G.C. IS TO PROVIDE AND INSTALL METAL STUDS OF A DEPTH AND GAUGE AS SHOWN ON THE PLANS. REFER TO STUD GAUGE CHART SHOWN BELOW FOR GAUGES NOT INDICATED ON PLANS (CONFORMANCE TO MANUFACTURER'S STANDARDS REMAINS THE G.C. RESPONSIBILITY):

STUD DEPTH (20 GA)	STUD SPACING	ALLOWABLE DEFLECTION LIMIT	PARTITION W/ ONE LAYER GWB EACH SIDE LIMITING HEIGHT
1 5/8"	16"o.c.	L/240	8'-5"
2 1/2"	16"o.c.	L/240	12'-10"
3 5/8"	16"o.c.	L/240	17'-11"
4"	16"o.c.	L/240	19'-2"
6"	16"o.c.	L/240	26'-1"

NOTE: UNLESS OTHERWISE NOTED, ALL WALL FRAMING SHALL BE 20 GAUGE STUDS MINIMUM AND ALL GWB SHALL BE 5/8" TYPE X IN ALL LOCATIONS.

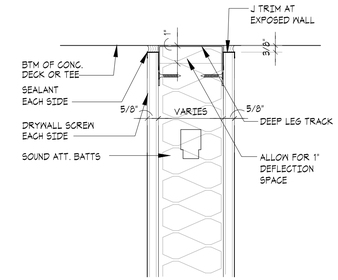

02 NON-RATED DEFLECTION HEAD
SCALE: N.T.S.

THE MCKINNEY PARTNERSHIP
architects
3600 West Main
Suite 200
Norman, Oklahoma
73072
405.360.1400 p
405.364.8287 f
tmparch.com

Seal:

STATE OF OKLAHOMA
RICHARD STEPHEN McKINNEY JR.
1998
NORMAN, OK
LICENSED ARCHITECT

Project:

City of Normal
Municipal Complex Renovation
Municipal Court
321 N. Webster Avenue
Norman, OK

Issue Date:
11/15/22 ISSUED FOR BIDDING

Revisions:

Project Number:
CM083319

Sheet Title:
PARTITION TYPES

Sheet Number:
A0.1

TOILET NOTES:

1. REFER TO PLUMBING DRAWINGS FOR PLUMBING FIXTURE SPECIFICATIONS.
2. REFER TO ACCESSIBLE FIXTURES AND ACCESSORIES MOUNTING SCHEDULE ON SHEET A0.2.
3. ALL CONSTRUCTION AND MOUNTING HEIGHTS SHALL COMPLY WITH ALL APPLICABLE CITY AND STATE ACCESSIBILITY REGULATIONS AS WELL AS THE FEDERAL ADA (AMERICANS WITH DISABILITY ACT) REGULATIONS. REFER QUESTIONABLE MOUNTING HEIGHTS TO THE ARCHITECT FOR FINAL DECISION. REFER SCHEDULE THIS SHEET
4. PROVIDE SOLID CONTINUOUS F.R. WOOD BLOCKING IN WALLS AS REQUIRED FOR ATTACHING ACCESSORIES, RAILS AND EQUIPMENT.
5. REFER TO INTERIOR ELEVATIONS ON SHEETS A1.0-A1.6 FOR LOCATION OF OTHER WALL MOUNTED ACCESSORIES.

ACCESSORIES SCHEDULE:

MARK	DESCRIPTION	MANUF./MODEL NO.	REMARKS
A	MIRROR	BRADLEY 780 -2436	24"X36" - 1/2" X 1/2" STAINLESS STEEL FRAME W/ MITERED CORNERS
B	SOAP DISPENSER	DEB STOKO WRM1LDS	WALL MOUNTED (PROVIDED BY OWNER/INSTALLED BY GC)
C	42" GRAB BAR	BRADLEY 812-001	CONCEALED ANCHORS & FASTENERS
D	48" GRAB BAR	BRADLEY 812-001	CONCEALED ANCHORS & FASTENERS
E	18" VERTICAL GRAB BAR	BRADLEY 812-001	CONCEALED ANCHORS & FASTENERS
F	TOILET PAPER DISPENSER	TORK #5555200	WALL MOUNTED (PROVIDED BY OWNER/INSTALLED BY GC)
G	COAT HOOK	BRADLEY 9114	SURFACE MOUNTED ON INSIDE OF ALL HC STALL DOORS AND INSIDE FACE OF ALL SINGLE USER TOILET DOORS
H	NOT USED		
I	PAPER TOWEL DISPENSER	TORK #5510202	WALL MOUNTED (PROVIDED BY OWNER/INSTALLED BY GC)
J	NOT USED		
K	SANITARY NAPKIN DISPOSAL	RUBBERMAID FG614000WHT	WALL MOUNTED (PROVIDED BY OWNER/INSTALLED BY GC)
L	RECESSED WASTE RECEPTACLE	BOBRICK B-3644	SEMI-RECESSED
M	BABY CHANGING STATION	KOALA KARE KB200	GREY
N	SEAT COVER DISPENSER	BRADLEY 5881	SURFACE MOUNTED BEHIND ALL TOILETS, TYP., 48" MAX. TO OPENING
O	RAISED LETTER BRAILLE EXIT SIGN	SIGN VENDOR	REFER TO L5F1.0 FOR LOCATIONS, SIZES & TYPE
P	RAISED LETTER BRAILLE ADA RESTROOM SIGN	SIGN VENDOR	REFER TO PLANS FOR TYPE (UNISEX, WOMEN, MEN)
Q	RAISED LETTER BRAILLE 'JURY ROOM' SIGN	SIGN VENDOR	REFER 01/A1.6
R	RAISED LETTER BRAILLE NOT AN EXIT SIGN	SIGN VENDOR	REFER 01/A1.0

ACCESSIBLE FIXTURES AND ACCESSORIES MOUNTING SCHEDULE:

MK.	ITEM	ACCESSIBLE DIMENSIONS REQUIRED
A	LAVATORIES - HEIGHT TO BOTTOM OF APRON	27" MIN
B	LAVATORIES - HEIGHT TO TOP OF RIM	34" MAX.
C	LAVATORIES - DEPTH FROM FINISHED WALL	17" MIN
D	URINAL - HEIGHT TO TOP OF RIM.	17" MAX.
E	URINAL - DEPTH FROM FINISHED WALL TO OUTER EDGE OF ELONGATED RIM	14" MIN.
F	GRAB BARS - HEIGHT TO TOP OF BAR.	33"
G	WATER CLOSET - HEIGHT TO TOP OF SEAT.	17"- 19"
H	WATER CLOSET - HEIGHT TO FLUSH CONTROLS	44" MAX.
J	MIRROR - HEIGHT MAXIMUM TO BOTTOM EDGE OF REFLECTING SURFACE.	40" MAX.
K	CONTROLS & DISPENSERS: (TELEPHONES INCLUDED) MAXIMUM TO CENTER LINE OF CONTROL DEVICE -	48" MAX.
L	DRINKING FOUNTAIN - HEIGHT TO TOP OF SPOUT	36" MAX.
M	DRINKING FOUNTAIN - HEIGHT TO BOTTOM OF APRON	27"
N	DRINKING FOUNTAIN - DEPTH FROM FINISHED WALL	17" MIN.
P	PAPER TOWEL DISPENSER/DRYER - HT TO OPENING/OPERABLE PARTS	48" MAX.
Q	TOILET PAPER DISPENSER - HT TO DISPENSER OPENING	15" MIN.
R	TOILET PAPER DISPENSER - DEPTH FROM WATER CLOSET	7" - 9"
S	COAT HOOK	48" MAX.
T	WATER CLOSET - CLEAR SPACE (WALL MTD)	56" MIN.
U	WATER CLOSET - FROM ADJACENT WALL TO CENTERLINE	17"
V	WATER CLOSET - CLEAR SPACE FROM ADJ. WALL	60" MIN.
W	LAVATORIES - CLEAR SPACE FROM CENTERLINE	15" MIN.
X	36" GRAB BAR - LOCATED FROM ADJACENT WALL	6"
Y	42" GRAB BAR - LOCATED FROM REAR WALL	12" MAX.
Z	18" VERTICAL GRAB BAR - LOCATED FROM ADJ. WALL	40"
AA	18" VERTICAL GRAB BAR - LOCATED FROM FLOOR	40"

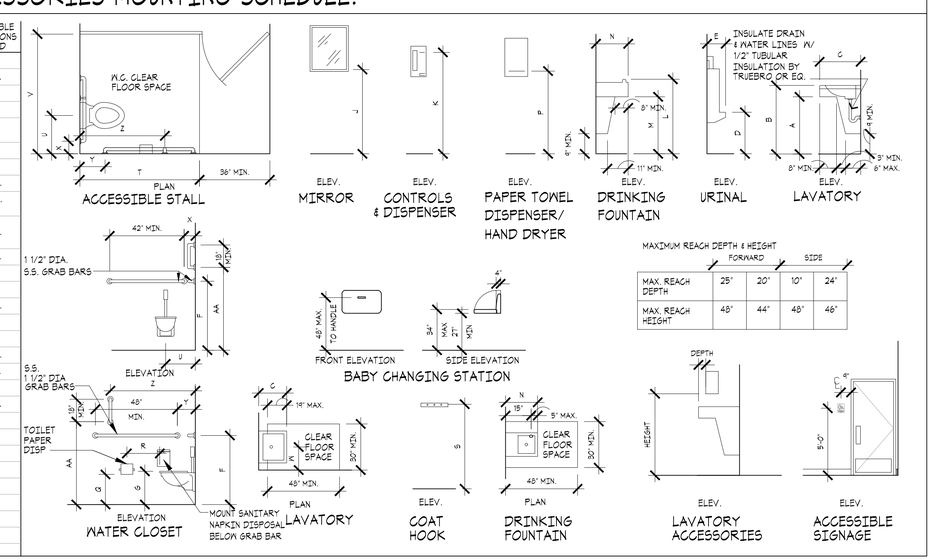

MAXIMUM REACH DEPTH & HEIGHT

	FORWARD		SIDE	
MAX. REACH DEPTH	25"	20"	10"	24"
MAX. REACH HEIGHT	48"	44"	48"	46"

THE MCKINNEY PARTNERSHIP
architects

3600 West Main
Suite 200
Norman, Oklahoma
73072
405.360.1400 p
405.364.8287 f
tmparch.com

Seal:

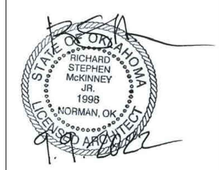

Project:

City of Norman
Municipal Complex Renovation
Municipal Court
321 N. Webster Avenue
Norman, OK

Issue Date:
11/15/22 ISSUED FOR BIDDING

Revisions:

Project Number:
CM083319

Sheet Title:
ACCESSIBLE FIXTURES & MOUNTING, TOILET ACCESSORIES

Sheet Number:
A0.2

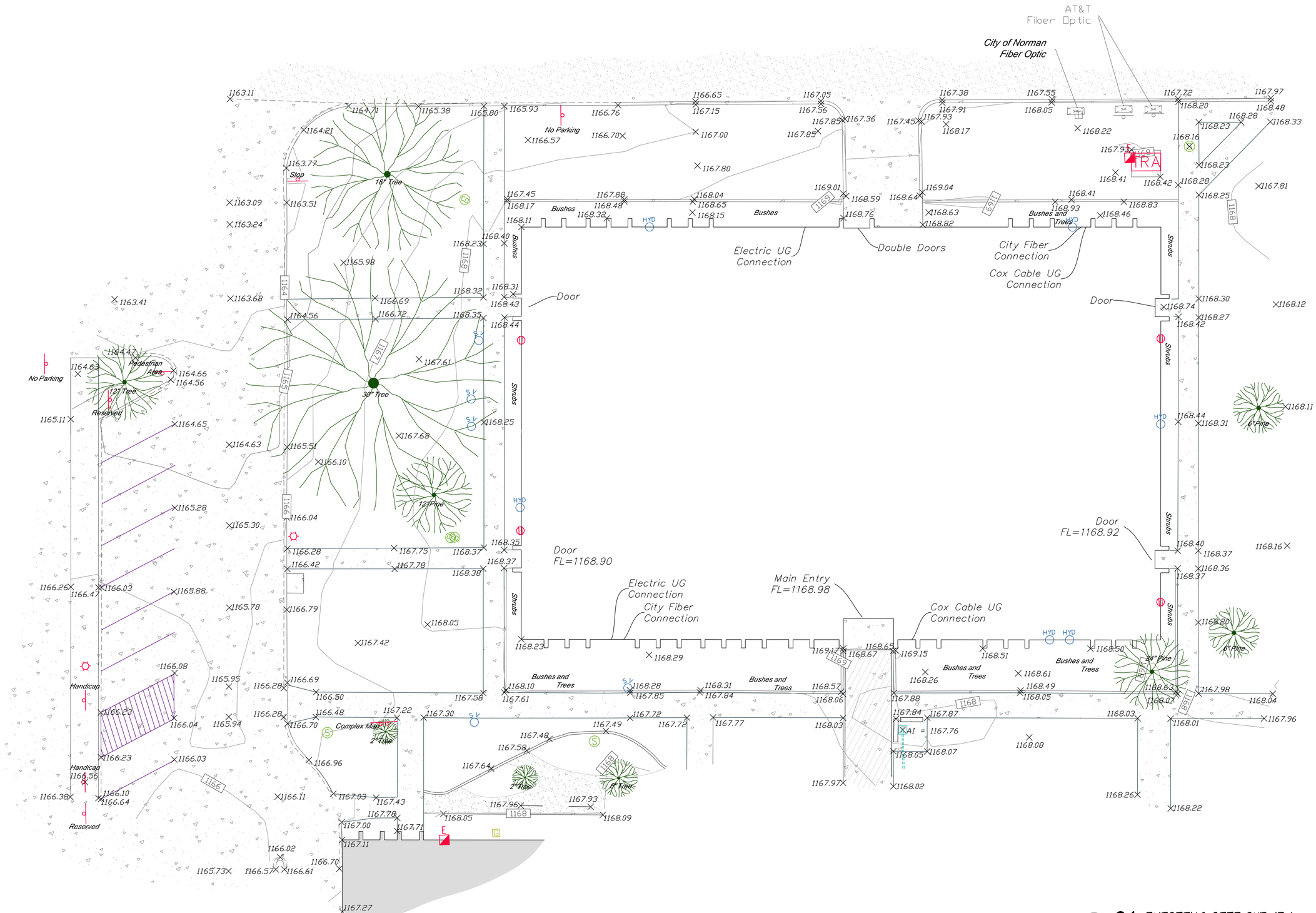

01 EXISTING SITE SURVEY

SCALE: 3/32" = 1'-0"

NOTE: SURVEY PROVIDED BY BEAU WINFREY, PLS, CITY SURVEYOR, CITY OF NORMAN PUBLIC WORKS, ENGINEERING ON 12/15/2020.

THE MCKINNEY PARTNERSHIP
architects

3600 West Main
Suite 200
Norman, Oklahoma
73072
405.360.1400 p
405.364.8287 f
tmparch.com

Seal:

STATE OF OKLAHOMA
RICHARD STEPHEN McKINNEY JR.
1998
NORMAN, OK
LICENSED ARCHITECT

Project:

City of Norman
Municipal Complex Renovation
Municipal Court
321 N. Webster Avenue
Norman, OK

Issue Date:
11/15/22 ISSUED FOR BIDDING

Revisions:

Project Number:
CM083319

Sheet Title:
EXISTING SITE SURVEY

Sheet Number:
A0.3

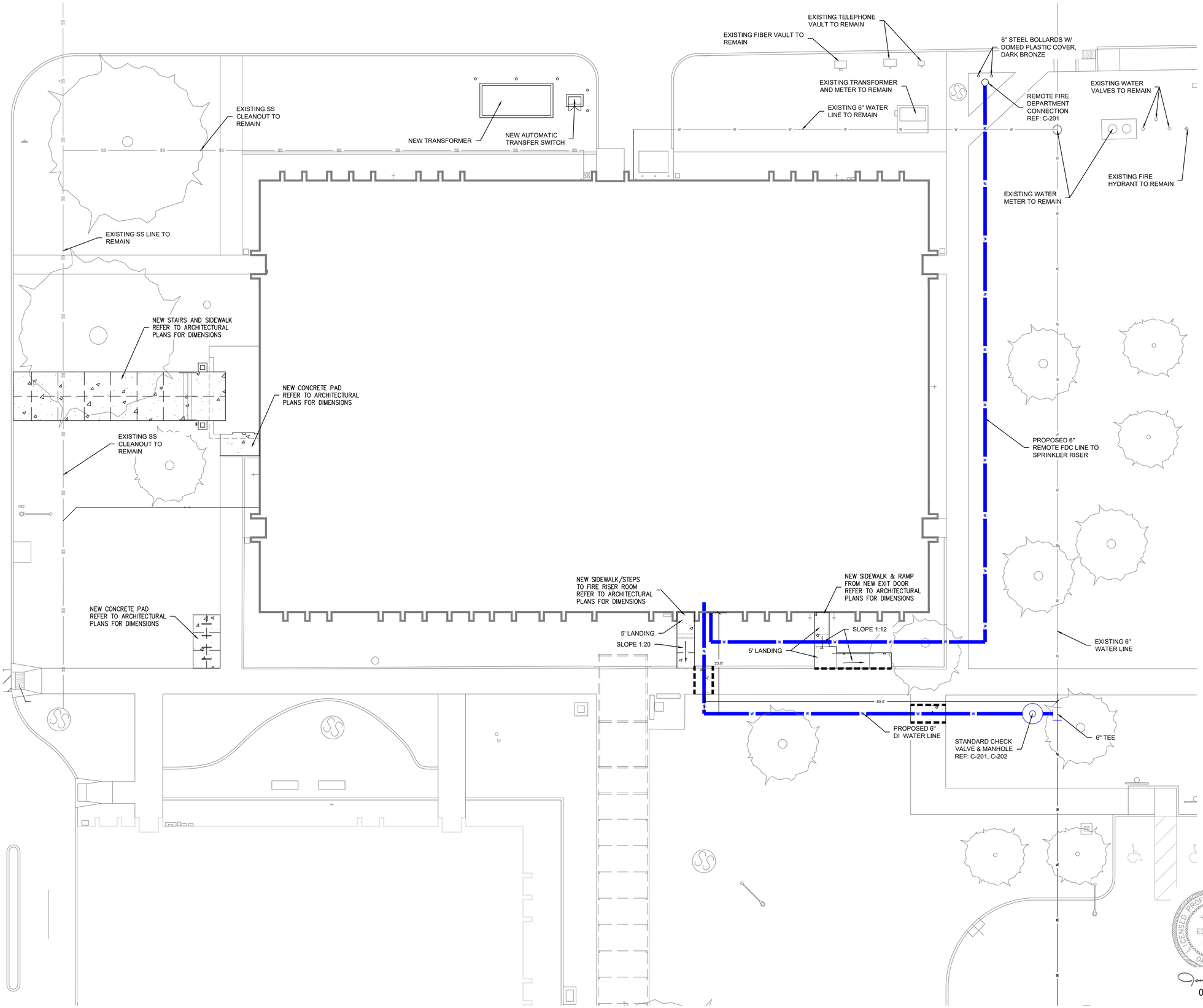

LEGEND

- SAW CUT CONTRACTION JOINT
- EXPANSION JOINT
- EXISTING WATER LINE
- PROPOSED WATER LINE
- CONCRETE SIDEWALK

DRAWING NOTES

1. LOCATIONS AND DEPTHS OF EXISTING UTILITIES ARE APPROXIMATE AND SHOULD BE FIELD VERIFIED BY CONTRACTOR PRIOR TO CONSTRUCTION.
2. ALL PIPE, PIPE FITTINGS AND INSTALLATION SHALL BE IN ACCORDANCE WITH CITY OF NORMAN STANDARD SPECIFICATIONS AND CONSTRUCTION DRAWINGS.
3. REFER TO SHEET C201, C202 FOR TYPICAL DETAILS.
4. PROPOSED 6" WATER LINE SHALL CONSIST OF CLASS 350 DUCTILE IRON PIPE MEETING THE REQUIREMENTS OF ANSI A21.51/AWWA C151.
5. ALL PIPE SHALL HAVE A WORKING PRESSURE OF 150 PSI PLUS 100 PSI SURGE AND A SAFETY FACTOR OF 2.
6. THE WATER LINE SHALL BE PRESSURE TESTED AND CHLORINATED BY CONTRACTOR UNDER THE OBSERVATION OF THE CITY OF NORMAN STAFF.
7. THE WATER LINE SHALL BE POLYETHYLENE WRAPPED IN ACCORDANCE WITH SECTION 2400 OF CITY OF NORMAN'S STANDARD SPECIFICATIONS.

0 10' 20'

1 C102 UTILITY PLAN
Scale: 1"=10'-0"

LICENSED PROFESSIONAL ENGINEER JOSEPH P. EDWARDS 25234 OKLAHOMA
09/09/2022

TRICORE
P.O. BOX 720992
OKC, OK 73172
405.256.2277

THE MCKINNEY PARTNERSHIP architects
3600 West Main
Suite 200
Norman, Oklahoma
73072
405.360.1400 p
405.364.8287 f
tmparch.com

Copyright © 2008 The McKinney Partnership Architects, P.C., All Rights Reserved

Seal:

Project:

City of Norman
Municipal Complex Renovation
Municipal Court
321 N. Webster Avenue
Norman, OK

Issue Date:
11/15/2022 ISSUED FOR BIDDING

Revisions:

Project Number:
CM083319

Sheet Title:
UTILITY PLAN

Sheet Number:
C-101

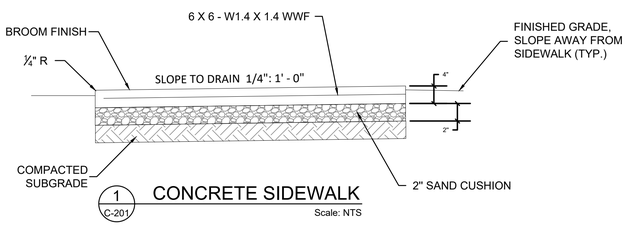

1 C-201 CONCRETE SIDEWALK

Scale: NTS

NOTES:

1. PORTLAND CEMENT CONCRETE SHALL HAVE A MIN. 28-DAY COMPRESSIVE STRENGTH OF 3,000 PSI.

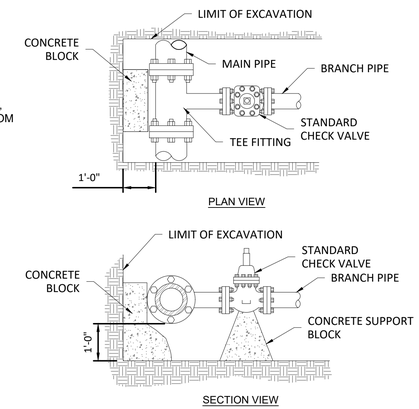

2 C-201 TYP. BARNCH LINE VALVE INSTALLATION

Scale: NTS

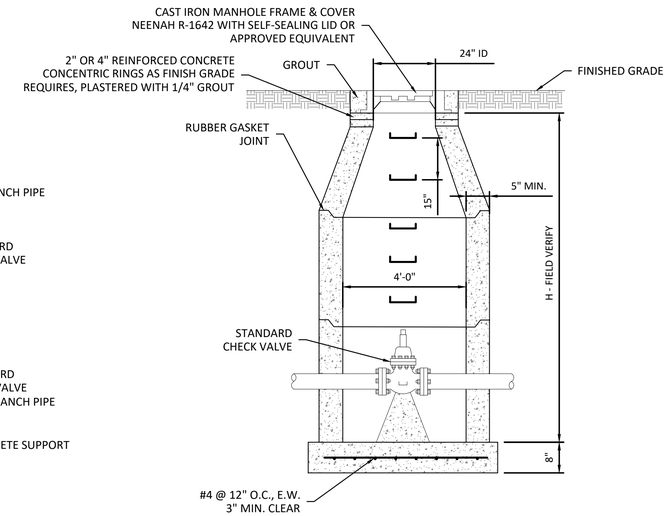

3 C-201 STANDARD PRECAST MANHOLE

Scale: NTS

NOTES:

1. PRECAST MANHOLE SHALL CONFORM TO CITY OF NORMAN STANDARDS AND ASTM C-478.
2. RUBBER GASKET JOINTS SHALL MEET ASTM C-443.
3. CONCRETE TO HAVE A MINIMUM 28-DAY COMPRESSIVE STRENGTH OF 4,000 PSI.
4. MANHOLE STEPS TO BE STANDARD POLYPROPYLENE STEPS CONFORMING TO ASTM C-478 AND AASHTO M-199, M.A. INDUSTRIES OR APPROVED EQUIVALENT.
5. BOTTOM PRECAST SECTION TO BE EMBEDDED A MINIMUM OF 3" INTO THE BASE IF A CAST-IN-PLACE BASE IS USED.

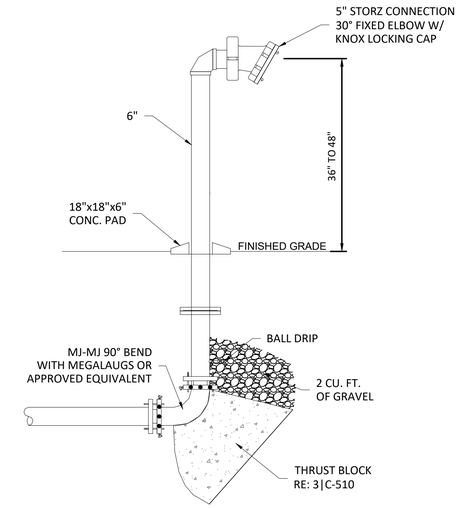

4 C-201 REMOTE FIRE DEPARTMENT CONNECTION

Scale: NTS

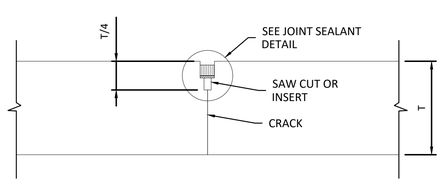

5 C-201 SAWED CONTRACTION JOINT

Scale: NTS

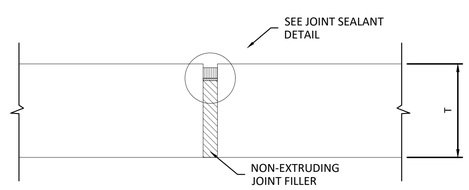

6 C-201 EXPANSION JOINT

Scale: NTS

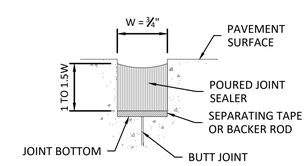

7 C-201 EXPANSION JOINT SEALANT

Scale: NTS

NOTES:

1. TOP OF SEALANT TO BE ⅛" - ¼" BELOW TOP OF PAVEMENT SURFACE.

LICENSED PROFESSIONAL ENGINEER JOSEPH P. EDWARDS 25234 OKLAHOMA

09/09/2022

TRICORE
P.O. BOX 720992
OKC, OK 73172
405.256.2277

THE MCKINNEY PARTNERSHIP architects

3600 West Main
Suite 200
Norman, Oklahoma
73072
405.360.1400 p
405.364.8287 f
tmparch.com

Copyright © 2008 The McKinney Partnership Architects, P.C., All Rights Reserved

Seal:

Project:

City of Norman
Municipal Complex Renovation
Municipal Court
321 N. Webster Avenue
Norman, OK

Issue Date:
11/15/2022 ISSUED FOR BIDDING

Revisions:

Project Number:
CM083319

Sheet Title:
TYPICAL DETAILS I

Sheet Number:
C-201

PIPE INSIDE DIAMETER MM	PIPE INSIDE DIAMETER IN.	STANDARD TRENCH WIDTH MM	STANDARD TRENCH WIDTH IN.
150	6	450	18
200	8	600	24
250	10	750	30
300	12	750	30
375	15	900	36
450	18	900	36
525	21	1,050	42
600	24	1,050	42
675	27	1,200	48
750	30	1,200	48
900	36	1,350	54
1,050	42	1,500	60
1,200	48	1,650	66

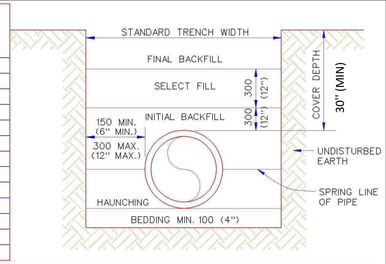

BEDDING MATERIALS

BACKFILL DESCRIPTION	NON-PAVED AREAS P V C	NON-PAVED AREAS DUCTILE IRON	NON-PAVED AREAS H D P E	PAVED AREAS (See Note 8) P V C	PAVED AREAS DUCTILE IRON	PAVED AREAS H D P E
FINAL BACKFILL	EXCAVATED MATERIAL	EXCAVATED MATERIAL	EXCAVATED MATERIAL	SBM	SBM	SBM
SELECT BACKFILL	SELECT FILL	SELECT FILL	SELECT FILL	SBM	SBM	SBM
INITIAL BACKFILL	COVER ≤10'-SAND OR SBM >10'-SBM	SELECT FILL	COVER ≤10'-SAND OR SBM >10'-SBM	SBM	SBM	SBM
HAUNCHING	COVER ≤10'-SAND OR SBM >10'-SBM	SELECT FILL	COVER ≤10'-SAND OR SBM >10'-SBM	SBM	SBM	SBM
BEDDING	See Note 5	See Note 5	See Note 5	See Note 5	See Note 5	See Note 5

NOTES:
1. INSTALLATION AND BACK FILLING SHALL MEET MANUFACTURER'S RECOMMENDATIONS.
2. SELECT FILL CONSISTS OF EXCAVATED MATERIALS CONTAINING NO ROCKS LARGER THAN 50 MM (2").
3. STANDARD BEDDING MATERIAL (SBM) SHALL CONFORM TO ODOT 703.01, TYPE A AGGREGATE BASE OR FLOWABLE FILL PER SECTION 501.02(B).
4. COMPACTION REQUIREMENTS:
   a. NON-PAVED AREAS: 90% MAXIMUM STANDARD PROCTOR DENSITY FOR COHESIONLESS SOILS AND 85% FOR COHESIVE SOILS.
   b. PAVED AREAS: 95% MAXIMUM STANDARD PROCTOR DENSITY FOR COHESIONLESS SOILS.
5. IF TRENCH IS DRY BEDDING SHALL BE 100 MM (4") SAND OR TYPE A AGGREGATE BASE, AND IF WET SHALL BE NO. 57 OR NO. 67 ROCK PER SECTION 701.06(C).
6. IN SANDY SOIL, CONTRACTOR MAY BACKFILL WITH NATIVE MATERIAL AND USE WARNING TAPE 18" ABOVE PIPE.
7. NO WATER JETTING ALLOWED.
8 THE BACKFILL MATERIAL SHALL EXTEND A MINMUM OF 2-FEET BEHIND THE BACK OF CURB, OR THE EDGE OF PAVEMENT WHERE NO CURB EXISTS.

METRIC UNITS ARE IN MM WITH ENGLISH UNITS IN PARENTHESIS, UNLESS INDICATED OTHERWISE.

WATER PIPE TRENCHING AND BEDDING

City Engineer Approval: | CITY OF NORMAN, OKLAHOMA
Approval Date: | Revision Date: 6-14-2001 | Rev. No. 3 | DRAWING NO. W 01

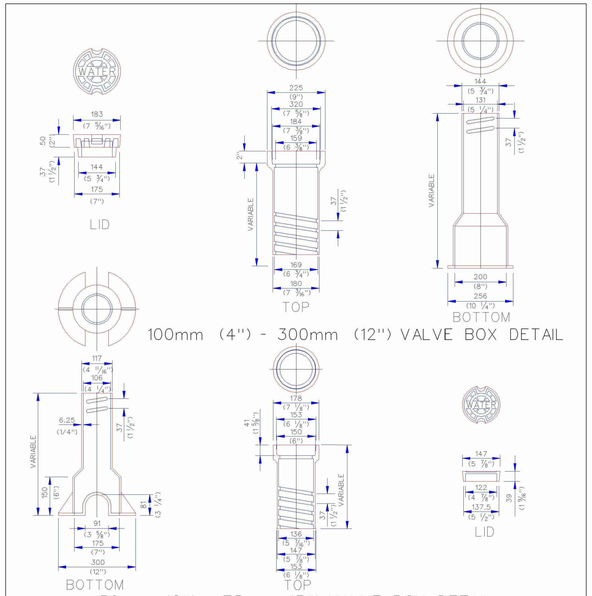

NOTES:
1. WATER LINE CONTRACTOR TO PLACE 600 MM (2') SQUARE CONCRETE PAD AROUND EACH WATER VALVE AFTER FINAL GRADING HAS BEEN COMPLETED AND TRENCHES HAVE SETTLED.
2. VALVE BOXES REQUIRING OVER 2 ADDITIONAL BOTTOM SECTIONS SHALL BE EXTENDED USING PVC PIPE WITH A BOTTOM AND TOP SECTION PLACED ON TOP OF THE PVC PIPE.
3. FOR VALVE BOXES IN STREETS REFER TO ST 15.

METRIC UNITS ARE IN MM WITH ENGLISH UNITS IN PARENTHESIS, UNLESS INDICATED OTHERWISE.

VALVE BOX

City Engineer Approval: | CITY OF NORMAN, OKLAHOMA
Approval Date: | Revision Date: | Rev. No. 0 | DRAWING NO. W 08

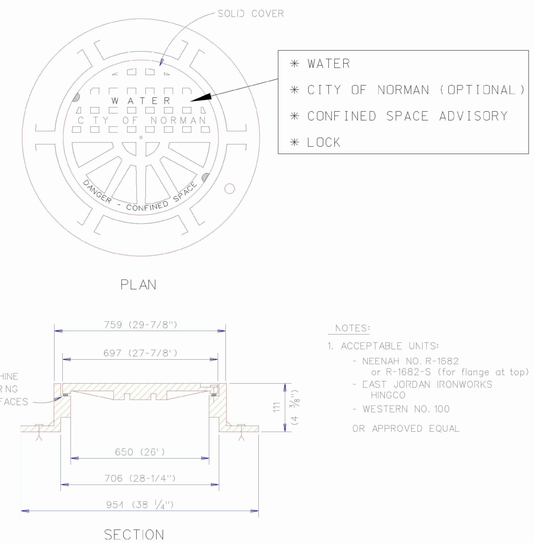

NOTES:
1. ACCEPTABLE UNITS:
   - NEENAH NO. R-1682 or R-1682-S (for flange at top)
   - EAST JORDAN IRONWORKS HINGCO
   - WESTERN NO. 100

   OR APPROVED EQUAL

METRIC UNITS ARE IN MM WITH ENGLISH UNITS IN PARENTHESIS, UNLESS INDICATED OTHERWISE.

WATER VAULT FRAME AND COVER

City Engineer Approval: | CITY OF NORMAN, OKLAHOMA
Approval Date: | Revision Date: 6-8-2006 | Rev. No. 1 | DRAWING NO. W 05

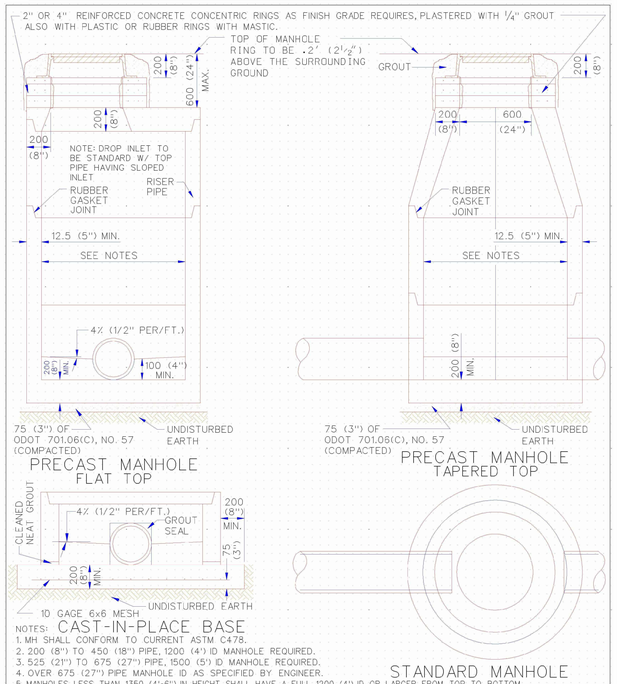

NOTES:
1. MH SHALL CONFORM TO CURRENT ASTM C478.
2. 200 (8") TO 450 (18") PIPE, 1200 (4') ID MANHOLE REQUIRED.
3. 525 (21") TO 675 (27") PIPE, 1500 (5') ID MANHOLE REQUIRED.
4. OVER 675 (27") PIPE MANHOLE ID AS SPECIFIED BY ENGINEER.
5. MANHOLES LESS THAN 1350 (4'-6") IN HEIGHT SHALL HAVE A FULL 1200 (4') ID OR LARGER FROM TOP TO BOTTOM.
6. MIN. CONCRETE STRENGTH TO BE ODOT CLASS A, 20.7 MPa (3000 PSI).
7. IN ASPHALT STREETS, MANHOLES SHALL HAVE 1200 X 1200 X 200 (4'X4'X8") CONCRETE COLLARS W/4-#6 REINFORCING BARS.

METRIC UNITS ARE IN MM WITH ENGLISH UNITS IN PARENTHESIS, UNLESS INDICATED OTHERWISE.

PRECAST MANHOLE

City Engineer Approval: | CITY OF NORMAN, OKLAHOMA
Approval Date: | Revision Date: 6-09-2006 | Rev. No. 1 | DRAWING NO. SS 02

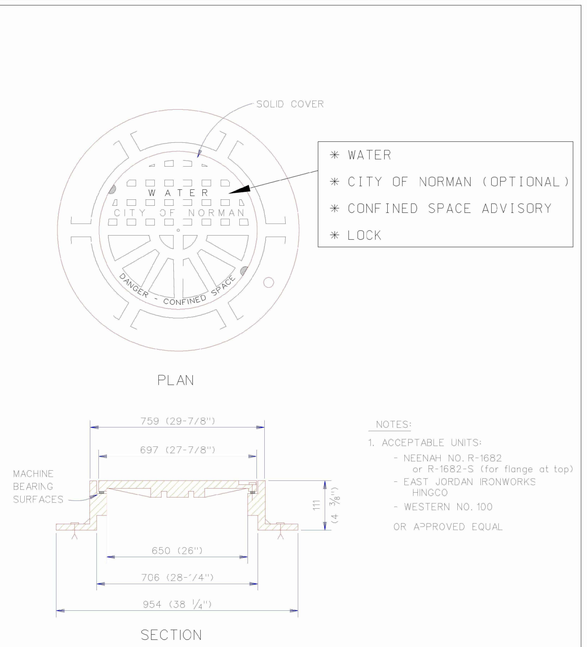

NOTES:
1. ACCEPTABLE UNITS:
   - NEENAH NO. R-1682 or R-1682-S (for flange at top)
   - EAST JORDAN IRONWORKS HINGCO
   - WESTERN NO. 100

   OR APPROVED EQUAL

METRIC UNITS ARE IN MM WITH ENGLISH UNITS IN PARENTHESIS, UNLESS INDICATED OTHERWISE.

WATER VAULT FRAME AND COVER

City Engineer Approval: | CITY OF NORMAN, OKLAHOMA
Approval Date: | Revision Date: 6-8-2006 | Rev. No. 1 | DRAWING NO. W 05

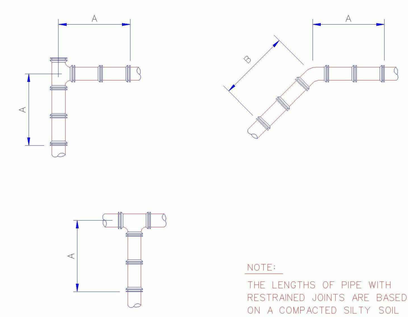

NOTE:
THE LENGTHS OF PIPE WITH RESTRAINED JOINTS ARE BASED ON A COMPACTED SILTY SOIL SURROUNDING THE PIPE

SIZE MM	SIZE IN.	A TEE & PLUG M	A TEE & PLUG FT.	90° BEND M	90° BEND FT.	B 45° BEND M	45° BEND FT.	22-1/2° BEND M	22-1/2° BEND FT.	11-1/4° BEND M	11-1/4° BEND FT.
150	6	3.7	12	5.2	17	3	10	1.8	6	0.9	3
200	8	4.9	16	6.7	22	4	13	2.4	8	1.2	4
250	10	5.8	19	8.2	27	4.9	16	2.7	9	1.5	5
300	12	7.0	23	9.7	32	5.8	19	3.4	11	1.8	6
350	14	7.9	26	11	36	6.3	21	3.7	12	2.1	7
400	16	8.7	29	12.3	41	7.3	24	4.3	14	2.4	8
450	18	9.7	32	13.5	45	7.9	26	4.6	15	2.4	8
500	20	10.7	35	15	50	8.7	29	4.9	16	2.7	9
600	24	12.3	41	17.4	58	10.4	34	5.8	19	3	10
750	30	15	50	20	70	12	40	6.7	22	3.7	12
900	36	17.4	58	25.5	82	13.8	46	7.9	26	4.3	14
1050	42	19.2	66	28.3	93	15.6	52	8.7	29	4.6	15

(LENGTH REQUIRED FOR RESTRAINING JOINTS)

RESTRAINED JOINTS

City Engineer Approval: | CITY OF NORMAN, OKLAHOMA
Approval Date: | Revision Date: | Rev. No. 0 | DRAWING NO. W 04

THE MCKINNEY PARTNERSHIP architects
3600 West Main
Suite 200
Norman, Oklahoma
73072
405.360.1400 p
405.364.8287 f
tmparch.com

Copyright © 2008 The McKinney Partnership Architects, P.C., All Rights Reserved

Seal:

Project:

City of Norman
Municipal Complex Renovation
Municipal Court
321 N. Webster Avenue
Norman, OK

Issue Date:
11/15/2022 ISSUED FOR BIDDING

Revisions:

LICENSED PROFESSIONAL ENGINEER JOSEPH P. EDWARDS 25234 OKLAHOMA
09/09/2022

TRICORE
P.O. BOX 720992
OKC, OK 73172
405.256.2277

Project Number:
CM083319

Sheet Title:
TYPICAL DETAILS II

Sheet Number:
C-202

1. GENERAL INFORMATION

A. GOVERNING BUILDING CODE: 2015 INTERNATIONAL BUILDING CODE (IBC-2015).

B. BUILDING RISK CATEGORY: THE BUILDING RISK CATEGORY ACCORDING TO IBC-2015 TABLE 1604.5 AND ASCE 7-10 TABLE 1.5-1 IS CATEGORY II.

C. ELEVATIONS: REFERENCE FINISHED FLOOR ELEVATIONS OF 100'-0" EQUALS ACTUAL EXISTING FINISH FLOOR OF THE EXISTING BUILDING.

D. CONTRACT DOCUMENTS:

1) THE CONTRACT DOCUMENTS CONSIST OF THE AGREEMENT BETWEEN THE OWNER AND CONTRACTOR, CONDITIONS OF THE CONTRACT, DRAWINGS, SPECIFICATIONS, ADDENDA ISSUED PRIOR TO EXECUTION OF THE CONTRACT, OTHER DOCUMENTS LISTED IN THE AGREEMENT AND MODIFICATIONS ISSUED AFTER EXECUTION OF THE CONTRACT.

2) THE GENERAL CONTRACTOR IS RESPONSIBLE FOR OBTAINING AND DISSEMINATING ALL CONTRACT DOCUMENTS AND LATEST ADDENDA TO ALL SUB-CONTRACTORS PRIOR TO DETAILING, FABRICATION OR INSTALLATION OF WORK.

3) CORRELATION OF THE CONTRACT DOCUMENTS: THE CONTRACT DOCUMENTS ARE COMPLEMENTARY, AND WHAT IS REQUIRED BY ONE SHALL BE AS BINDING AS IF REQUIRED BY ALL. IF CONFLICTING REQUIREMENTS ARE FOUND BETWEEN THE DRAWINGS, SPECIFICATIONS AND/OR THESE GENERAL NOTES, THE MORE STRINGENT AND HIGHEST COST REQUIREMENT SHALL CONTROL UNLESS DIRECTED OTHERWISE IN WRITING BY THE OWNER'S REPRESENTATIVE.

4) THE GENERAL CONTRACTOR SHALL COMPARE THE ARCHITECTURAL AND STRUCTURAL DRAWINGS FOR DISCREPANCIES BETWEEN EACH SET, AND WITHIN EACH SET OF DRAWINGS, AND REPORT DISCREPANCIES, IF ANY, TO THE CONSTRUCTION MANAGER PRIOR TO THE DETAILING, FABRICATION AND INSTALLATION OF AFFECTED WORK.

5) GENERAL CONTRACTOR SHALL COORDINATE SIZES AND LOCATIONS OF OPENINGS THROUGH FLOORS, ROOF, AND WALLS SHOWN ON ELECTRICAL, PLUMBING, AND FIRE SUPPRESSION SYSTEM DESIGN DOCUMENTS WITH ASSOCIATED SUBCONTRACTORS.

6) ALTHOUGH NOT NECESSARILY SPECIFICALLY REFERENCED IN THE CONTRACT DOCUMENTS, TYPICAL DETAILS AND GENERAL NOTES APPLY TO THE ENTIRE PROJECT WHEREVER CONDITIONS SIMILAR TO THOSE DETAILED OR NOTED EXIST.

7) THE USE OF ELECTRONIC FILES OR REPRODUCTION OF CONTRACT DOCUMENTS BY ANY TRADE OR MATERIAL SUPPLIER IN LIEU OF COMPLETELY INDEPENDENT PREPARATION OF SHOP DRAWINGS SIGNIFIES THE SUPPLIER'S CERTIFICATION THAT ALL INFORMATION SHOWN IN THE SHOP DRAWINGS IS CORRECT, AND ASSIGNS THEMSELVES TO RESPONSIBILITY FOR ANY JOB EXPENSE ARISING DUE TO ANY ERRORS OCCURRING THEREIN.

2. DESIGN LOADS

A. DEAD LOAD: SELF WEIGHT OF MATERIALS, UNLESS NOTED OTHERWISE

B. ROOF DEAD LOAD:
1) ROOFING SYSTEM..6 PSF
2) RIGID INSULATION..2 PSF
3) METAL ROOF DECK...3 PSF
4) JOIST SELF-WEIGHT...2 PSF
5) CEILING SYSTEM..2 PSF
6) ROOF COLLATERAL (LIGHTING, DUCTWORK, SPRINKLER PIPING, BRIDGING & MISC. FRAMING)..5 PSF
7) TOTAL..20 PSF

C. UNIFORM LIVE LOADS:
1) ROOF LIVE LOAD (UN-REDUCIBLE)............................20 PSF
2) SLAB-ON-GRADE...250 PSF

D. WIND LOADS:
1) GOVERNING CODE:.......................................ASCE 7-10
2) RISK CATEGORY: II
3) EXPOSURE CATEGORY:...C
4) INTERNAL PRESSURE COEFFICIENT, GCPI:....... ....+/- 0.18
5) TOPOGRAPHIC FACTOR, KZT:...................................1.0
6) DIRECTIONALITY FACTOR, KD:................................0.85
7) ULTIMATE DESIGN WIND SPEED, Vult:.......................115 MPH
8) NOMINAL DESIGN WIND SPEED, Vasd:.........................90 MPH
9) DESIGN WIND PRESSURE TO BE USED FOR EXTERIOR COMPONENTS AND CLADDING (BASED ON 100 SQ.FT. AREA):
A) INTERIOR ZONES ....+23.9PSF/-26.2PSF
B) END ZONES,(8'-0")..........................+23.9PSF/-29.1PSF

E. SNOW LOADS:
1) GOVERNING CODE:.......................................ASCE 7-10
2) SNOW IMPORTANCE FACTOR, Is:................................1.0
3) GROUND SNOW LOAD, Pg:...................................10 PSF
4) EXPOSURE OF ROOF: ....PARTIALLY EXPOSED
5) EXPOSURE FACTOR, Ce:.......................................1.0
6) THERMAL FACTOR, Ct:..1.0
7) ROOF SLOPE FACTOR, Cs:.....................................1.0
8) CALCULATED FLAT ROOF SNOW LOAD, Pf:....................7.0 PSF
9) MINIMUM FLAT ROOF SNOW LOAD, I*Pg:......................10 PSF
10) RAIN ON SNOW SURCHARGE LOAD:.............................5 PSF

F. SEISMIC DESIGN CRITERIA:
1) GOVERNING CODE:.......................................ASCE 7-10
2) RISK CATEGORY: II
3) SEISMIC IMPORTANCE FACTOR, Ie:............................1.00
4) SOIL SITE CLASSIFICATION:....................................D
5) 0.2 SEC. MAPPED SPECTRAL ACCELERATION, Ss:...............0.272
6) 1.0 SEC. MAPPED SPECTRAL ACCELERATION, S1:...............0.079
7) SITE COEFFICIENT, 0.2 SEC. PERIOD, Fa:...................1.582
8) SITE COEFFICIENT, 1.0 SEC. PERIOD, Fv:....................2.40
9) 0.2 SEC. DESIGN SPECTRAL ACCELERATION, Sds:..............0.287
10) 1.0 SEC. DESIGN SPECTRAL ACCELERATION, Sd1:..............0.127
11) SEISMIC DESIGN CATEGORY:.....................................B

3. MATERIAL DESIGN VALUES

A. CONCRETE (MINIMUM ULTIMATE COMPRESSIVE STRENGTH AT 28 DAYS, NORMAL WEIGHT U.N.O.)
1) FOUNDATIONS:...3,500 PSI
2) SLAB-ON-GRADE:.......................................4,000 PSI
3) ALL OTHER STRUCTURAL CONCRETE, U.N.O:................4,000 PSI

B. CONCRETE AND MASONRY REINFORCEMENT (MINIMUM YIELD STRENGTH)
1) ALL PLAIN AND DEFORMED BARS (ASTM A615, GRADE 60)......FY = 60 KSI
2) WELDED PLAIN WIRE REINFORCEMENT (ASTM A1064)...........FY = 65 KSI
3) WELDED DEFORMED WIRE REINFORCEMENT (ASTM A1064)........FY = 70 KSI
4) WELDABLE REINFORCING BARS (ASTM A706) ....FY = 60 KSI

C. STRUCTURAL STEEL (MINIMUM YIELD STRENGTH)
1) ALL WIDE FLANGE SHAPES (ASTM A992)....................FY = 50 KSI
2) SQUARE AND RECTANGULAR HSS (ASTM A500, GRADE B)........FY = 46 KSI
3) ROUND HSS (ASTM A500, GRADE B).........................FY = 42 KSI
4) ANCHOR RODS (ASTM F1554, GRADE 36).....................FY = 36 KSI
5) DEFORMED BAR ANCHORS (AWS D1.1 TYPE C, ASTM A496)......FY = 70 KSI
6) ALL OTHER SHAPES AND PLATES UNLESS NOTED (ASTM A36)....FY = 36 KSI

D. COLD FORMED STEEL (MINIMUM YIELD STRENGTH)
1) ROOF DECK (ASTM A653, SS GRADE 33, G-60 GALVANIZED)....FY = 33 KSI
2) COLD FORMED METAL STUDS, 43 MIL AND LIGHTER (ASTM A1003/A, GRADE ST33H, G-60 GALVANIZED)...FY = 33 KSI
3) COLD FORMED METAL STUDS, 54 MIL AND HEAVIER (ASTM A1003/A, GRADE ST50H, G-60 GALVANIZED)...FY = 50 KSI
4) COLD FORMED METAL CLIPS (ASTM A653, SS GRADE 50,G-90 GALVANIZED)...FY = 50 KSI

4. CONSTRUCTION LOADS AND STABILITY

A. THE CONTRACTOR SHALL BE RESPONSIBLE FOR VERIFYING ALL TEMPORARY CONSTRUCTION LOADS CAN BE SAFELY SUPPORTED BY THE STRUCTURE DURING CONSTRUCTION.

B. THE STRUCTURAL FRAMING SYSTEM AND FOUNDATIONS HAVE BEEN DESIGNED AS A COMPLETE STRUCTURAL SYSTEM FOR SUPPORT OF THE LOADS INDICATED IN THE CONSTRUCTION DOCUMENTS. THE STRUCTURE HAS NOT BEEN DESIGNED OR CHECKED FOR TEMPORARY CONSTRUCTION LOADS NOR HAS IT BEEN DESIGNED OR CHECKED FOR ADEQUACY OR STABILITY AS A PARTIALLY ERECTED STRUCTURE.

C. THE CONTRACTOR SHALL BE RESPONSIBLE FOR CONFIRMING THE ABILITY OF THE PARTIALLY COMPLETED OR FULLY COMPLETED STRUCTURE TO RESIST ALL CONSTRUCTION LOADS INCLUDING BUT ARE NOT NECESSARILY LIMITED TO MATERIAL STAGING, PERSONNEL, AND EQUIPMENT.

D. THE CONTRACTOR SHALL PROVIDE TEMPORARY SHORES, GUYS, BRACES, AND OTHER SUPPORTS DURING CONSTRUCTION TO KEEP STRUCTURAL FRAMING COMPONENTS SECURE, PLUMB, AND IN ALIGNMENT AGAINST TEMPORARY CONSTRUCTION LOADS AND LOADS EQUAL IN INTENSITY TO DESIGN LOADS. THE TEMPORARY SUPPORTS SHALL BE SUFFICIENT TO SECURE THE PARTIALLY ERECTED STRUCTURE OR ANY PORTION THEREOF AGAINST LOADS THAT ARE LIKELY TO BE ENCOUNTERED DURING CONSTRUCTION, INCLUDING THOSE DUE TO WIND AND THOSE THAT RESULT FROM CONSTRUCTION OPERATIONS.

E. THE CONTRACTOR SHALL NOT REMOVE TEMPORARY SUPPORTS UNTIL THE INSTALLATION OF ALL STRUCTURAL ELEMENTS IS COMPLETE AND HAS BEEN ACCEPTED AS COMPLETE BY THE OWNER'S REPRESENTATIVE.

5. FOUNDATION NOTES

A. EXISTING PIER FOUNDATIONS: RECORD DRAWINGS INDICATE EXISTING STRUCTURE IS SUPPORTED ON PIER AND GRADE BEAM FOUNDATIONS. WHERE SIGNIFICANT ADDITIONAL LOADS ARE ADDED TO EXISTING PIERS, THESE DRAWINGS INDICATE THE ADDITION OF HELICAL PIERS TO SUPPLEMENT THE EXISTING PIERS.

B. OBSERVATION OF BEARING CONDITIONS: THE GENERAL CONTRACTOR SHALL ENGAGE A GEOTECHNICAL ENGINEER TO OBSERVE THE FOUNDATION EXCAVATIONS PRIOR TO STEEL OR CONCRETE PLACEMENT TO DETERMINE IF FOUNDATION MATERIALS ARE CAPABLE OF SUPPORTING THE DESIGN LOADS NOTED ABOVE.

C. HELICAL PIER FOUNDATIONS:

1) HELICAL PIER FOUNDATIONS SHALL BE DESIGNED TO SUPPORT THE SERVICE LOADS SHOWN ON THE DRAWINGS. DESIGNS SHALL BE SUBMITTED FOR APPROVAL.

2) SUBMIT SHOP DRAWINGS SHOWING PROFILES AND PRODUCT COMPONENTS. SUBMIT CALCULATIONS FOR THE PIER DESIGN, INCLUDING ICC EVALUATION TEST REPORTS SHOWING COMPLIANCE WITH ICC AC358. CALCULATION SHALL BE PREPARED BY AND SEALED BY AN ENGINEER LICENSED IN THE STATE OF OKLAHOMA.

3) MANUFACTURED COMPONENTS SHALL BE HOT DIPPED GALVANIZED.

4) TESTS AND INSPECTIONS SHALL BE MADE IN ACCORDANCE WITH ICC AC358.

5) SUBMIT MANUFACTURER'S INSTALLATION INSTRUCTIONS AND LIFETIME WARRANTY DOCUMENT EXECUTED BY AUTHORIZED COMPANY OFFICIAL.

6) INSTALLATION SHALL BE BY CERTIFIED INSTALLER OR DEALER

A) PROVIDE INSTALLATION TORQUE UNITS, ROTARY TYPE, FORWARD AND REVERSE CAPABILITY, ELECTRIC OR HYDRAULIC POWERED, CAPABLE OF POSITIONING THE SCREW ANCHOR AT THE DESIGNED ANGLE. MINIMUM DRIVE EQUIPMENT RATING TO EQUAL OR EXCEED THE MAXIMUM TORQUE RATING OF THE SPECIFIED SCREW ANCHOR. PROVIDE TORQUE MONITORING DEVICE AS PART OF THE INSTALLING UNIT OR AS A SEPARATE IN-LINE DEVICE. MAKE AVAILABLE CALIBRATION TORQUE MONITORING DATA FOR ENGINEER, INSPECTOR, AND OWNER.

B) POSITION SCREW ANCHOR AS INDICATED ON CONSTRUCTION DOCUMENTS. ESTABLISH PROPER ALIGNMENT AT THE START OF CONSTRUCTION.

C) CONNECT THE INSTALLATION UNIT TO THE ANCHOR WITH MANUFACTURER'S APPROVED ADAPTERS. PROVIDE SAFE AND SECURE CONNECTION TO SCREW ANCHORS AND EXTENSIONS. APPLY SUFFICIENT DOWNWARD PRESSURE TO ADVANCE ANCHOR. INSTALL IN A SMOOTH AND CONTINUOUS MANNER AT APPROPRIATE RATE OF ANCHOR ROTATION.

D) MONITOR TORQUE APPLIED BY USING THE INSTALLING UNIT DURING THE ENTIRE INSTALLATION, AND RECORD VALUES ACHIEVED ON EACH SCREW ANCHOR. REMOVE ENCOUNTERED OBSTRUCTIONS, OR RELOCATE SCREW ANCHOR AND ADJACENT ANCHORS AS REQUIRED.

E) PROVIDE EXTENSION MATERIAL TO OBTAIN INDICATED DEPTH, COUPLE WITH BOLTS PROVIDED AS PART OF EXTENSION. INSTALL TO MINIMUM DEPTH INDICATED. PROVIDE GROUND COVER (5 FT MINIMUM) ABOVE THE TOP HELIX. OBTAIN WRITTEN PERMISSION FROM ENGINEER BEFORE PROCEEDING IF INDICATED DEPTH OR MINIMUM TORQUE CANNOT BE OBTAINED.

F) CONNECT SCREW ANCHOR TO PIER CAP; USE MANUFACTURER APPROVED STEEL BRACKET OR APPROVED DEVELOPED REINFORCING BARS.

7) PROJECT RECORD DOCUMENTS FOR INSTALLED MATERIALS SHALL BE IN ACCORDANCE WITH DIVISION 1 CLOSEOUT SUBMITTALS (PROJECT RECORD DOCUMENTS) SECTION. ACCURATELY RECORD THE FOLLOWING: TYPE (NUMBER AND SIZE OF HELICES) AND SIZE; ACTUAL LOCATIONS OF SCREW ANCHORS, ANCHOR DIAMETER AND ANCHOR LENGTH, INSTALLATION ANGLE BELOW HORIZONTAL; EXTENSION LENGTH ALONG SHAFT AND DATUM; ANCHOR TESTING (IF REQUIRED); TORQUE INSTALLATION RECORDS ON ALL SCREW ANCHORS AND TORQUE MONITORING CALIBRATION DATA.

6. CONCRETE CONSTRUCTION NOTES

A. DESIGN CRITERIA: THE DESIGN OF CONCRETE IS GOVERNED BY "BUILDING CODE REQUIREMENTS FOR STRUCTURAL CONCRETE (ACI 318-14) AND COMMENTARY (ACI 318R-14)."

B. CONCRETE CONSTRUCTION CRITERIA: ALL CONCRETE CONSTRUCTION SHALL COMPLY WITH THE PROVISIONS OF "SPECIFICATIONS FOR STRUCTURAL CONCRETE (ACI 301-16)."

C. TOLERANCES: TOLERANCES FOR CONCRETE CONSTRUCTION SHALL BE IN ACCORDANCE WITH "SPECIFICATION FOR TOLERANCES FOR CONCRETE CONSTRUCTION AND MATERIALS (ACI 117-10) AND COMMENTARY (ACI 117R-10)."

D. CONCRETE MIXTURES:

1) CEMENTITIOUS MATERIALS
A) PORTLAND CEMENT: ASTM C150 TYPE I OR II UNLESS SPECIFICALLY NOTED OTHERWISE.
B) FLY ASH: ASTM C618 CLASS F OR C. THE MAXIMUM PERCENTAGE OF FLY ASH SHALL NOT EXCEED 25 PERCENT OF THE TOTAL CEMENTITIOUS MATERIAL.

2) ALL CONCRETE MIXES SHALL BE COMPRISED OF NORMAL WEIGHT AGGREGATES CONFORMING TO ASTM C33, EXCEPT WHERE SPECIFICALLY INDICATED AS LIGHTWEIGHT, IN WHICH CASE AGGREGATES SHALL CONFORM TO ASTM C330.

3) MIXING WATER SHALL CONFORM TO ASTM C1062. MIXING WATER, INCLUDING THAT PORTION OF MIXING WATER CONTRIBUTED IN THE FORM OF FREE MOISTURE ON AGGREGATES, SHALL NOT CONTAIN DELETERIOUS AMOUNTS OF CHLORIDE IONS.

4) ADMIXTURES, IF USED, SHALL CONFORM TO THE FOLLOWING:
A) WATER REDUCTION AND SETTING TIME MODIFICATION: ASTM C494.
B) PRODUCING FLOWING CONCRETE: ASTM C1017.
C) AIR ENTRAINMENT: ASTM C260.
D) INHIBITING CHLORIDE INDUCED CORROSION: ASTM C1582.

5) MIX DESIGNS SHALL BE PROPORTIONED BASED ON THE FOLLOWING MIX CHARACTERISTICS;

A) BELOW GRADE FOUNDATIONS AND WALLS
1) EXPOSURE CLASSES, F1, S0, W0, C1
2) 28-DAY COMPRESSIVE STRENGTH: 3,500 PSI
3) MAXIMUM WATER/CEMENT RATIO: 0.55
4) MAXIMUM AGGREGATE SIZE: 1 1/2 INCHES
5) TARGET AIR CONTENT: 4.5 PERCENT PLUS OR MINUS 1.5 PERCENT
6) MAXIMUM WATER-SOLUBLE CHLORIDE ION CONTENT IN CONCRETE, PERCENT BY WEIGHT OF CEMENT: 0.30

B) INTERIOR SLABS-ON-GRADE AND ELEVATED CAST-IN-PLACE SLABS
1) EXPOSURE CLASSES, F0, S0, W0, C0
2) 28-DAY COMPRESSIVE STRENGTH: 4,000 PSI
3) MAXIMUM WATER/CEMENT RATIO: 0.45
4) MAXIMUM AGGREGATE SIZE: 1 1/2-INCHES
5) TARGET AIR CONTENT: DO NOT ALLOW AIR CONTENT OF TROWEL-FINISHED FLOORS TO EXCEED 3 PERCENT
6) MAXIMUM WATER-SOLUBLE CHLORIDE ION CONTENT IN CONCRETE, PERCENT BY WEIGHT OF CEMENT: 1.00

6) CONCRETE MIX PROPORTIONS SHALL BE ESTABLISHED IN ACCORDANCE WITH ARTICLE 4.2.3 OF "SPECIFICATIONS FOR STRUCTURAL CONCRETE (ACI 301)." SO THAT THE CONCRETE SATISFIES THE FOLLOWING THREE REQUIREMENTS:
A) THE CONCRETE CAN BE PLACED READILY WITHOUT SEGREGATION INTO FORMS AND AROUND REINFORCEMENT UNDER ANTICIPATED PLACEMENT CONDITIONS. THE CONCRETE PRODUCER SHALL DETERMINE WHETHER ADMIXTURES ARE NECESSARY FOR WATER REDUCTION, SET TIME, OR SLUMP REQUIREMENTS.
B) THE CONCRETE SHALL MEET REQUIREMENTS FOR THE ASSIGNED EXPOSURE CLASSES OUTLINED HEREIN.
C) THE CONCRETE SHALL CONFORM TO STRENGTH TEST REQUIREMENTS FOR STANDARD-CURED SPECIMENS.

7) DOCUMENTATION OF CONCRETE MIXTURE CHARACTERISTICS SHALL BE SUBMITTED FOR REVIEW BEFORE THE MIXTURE IS USED. EVIDENCE OF THE ABILITY OF THE PROPOSED MIXTURE TO COMPLY WITH THE CONCRETE MIXTURE REQUIREMENTS IN THE CONSTRUCTION DOCUMENTS SHALL BE INCLUDED IN THE SUBMITTAL. THE EVIDENCE SHALL BE BASED ON FIELD TEST RECORDS OR LABORATORY TRIAL BATCHES.

E. CONCRETE MISCELLANEOUS:

1) WATERSTOPS AND WATERPROOFING: ALL CONSTRUCTION JOINTS (VERTICAL AND HORIZONTAL) IN BELOW-GRADE CONCRETE WALLS, TRENCHES AND PITS SHALL BE KEYED AND HAVE BENTONITE WATERSTOPS INSTALLED UNLESS NOTED OTHERWISE. ALL BELOW-GRADE CONCRETE WALLS, PITS AND TRENCHES SHALL BE WATERPROOFED AS SHOWN IN ARCHITECTURAL DRAWINGS, UNLESS NOTED OTHERWISE.

2) EQUIPMENT PADS: PROVIDE CONCRETE EQUIPMENT PADS OF SIZE REQUIRED FOR EQUIPMENT FURNISHED. SEE MECHANICAL, PLUMBING, FIRE PROTECTION AND ELECTRICAL DRAWINGS FOR NUMBER, SIZE, AND LOCATION OF SUCH PADS. UNLESS OTHERWISE SHOWN, MINIMUM PAD THICKNESS SHALL BE 4" AND SHALL EXTEND A MINIMUM OF 6" BEYOND THE FACE OF THE EQUIPMENT. MINIMUM REINFORCING SHALL BE #4 BARS AT 12" O.C. EACH WAY. TOOLED OR CHAMFERED EDGES SHALL BE PROVIDED AT ALL EQUIPMENT PADS. ANCHORAGE TO SUPPORTING SLAB SHALL BE MADE. REFER TO TYPICAL DETAILS.

3) CHAMFERED EDGES: UNLESS NOTED OTHERWISE ON ARCHITECTURAL DRAWINGS, PROVIDE 3/4" CHAMFER ON ALL EXPOSED CONCRETE EDGES.

4) SURFACE FINISH: ALL HORIZONTAL CONCRETE SURFACES SHALL HAVE A TROWELED FINISH UNLESS NOTED OTHERWISE IN ARCHITECTURAL DRAWINGS OR FLOORING SPECIFICATIONS.

5) MOIST CURING OF SLABS: SLABS-ON-GRADE AND SLABS-ON-DECK SHALL BE WATER CURED FOR A MINIMUM OF 7 DAYS BY PONDING, SPRAYING, SPRINKLING OR BY USE OF SATURATED COVERINGS. CURING COMPOUNDS ARE EXPRESSLY PROHIBITED.

7. POST-INSTALLED ANCHORS AND DOWELS

A. QUALIFICATION REQUIREMENTS FOR INSTALLERS

1) CONTRACTOR SHALL REQUEST, SCHEDULE AND FACILITATE THE ANCHOR AND/OR ADHESIVE MANUFACTURER'S REPRESENTATIVE TO PROVIDE ONSITE INSTALLATION TRAINING FOR ALL THE MANUFACTURER'S SPECIFIED ANCHORING PRODUCTS. THE ENGINEER MUST RECEIVE DOCUMENTED CONFIRMATION THAT ALL OF THE CONTRACTOR'S ANCHOR INSTALLATION PERSONNEL ARE TRAINED PRIOR TO COMMENCEMENT OF ANCHOR INSTALLATION OPERATIONS.

2) PER ACI 318-14 SECTION 17.8.2.2, INSTALLATION OF ADHESIVE ANCHORS HORIZONTALLY OR UPWARDLY INCLINED SHALL BE PERFORMED BY PERSONNEL CERTIFIED BY AN APPLICABLE CERTIFICATION PROGRAM. CERTIFICATION SHALL INCLUDE WRITTEN AND PERFORMANCE TESTS IN ACCORDANCE WITH THE ACI/CRSI ADHESIVE ANCHOR INSTALLER (AAI) CERTIFICATION PROGRAM, OR EQUIVALENT.

B. QUALIFICATION REQUIREMENTS FOR PRODUCTS

1) POST-INSTALLED EXPANSION AND UNDERCUT ANCHORS SHALL MEET THE ASSESSMENT CRITERIA OF ACI 355.2 "QUALIFICATION OF POST-INSTALLED MECHANICAL ANCHORS IN CONCRETE."

2) POST-INSTALLED ADHESIVE ANCHORS SHALL MEET THE ASSESSMENT CRITERIA OF ACI 355.4 "QUALIFICATION OF POST-INSTALLED ADHESIVE ANCHORS IN CONCRETE."

C. APPROVED ANCHORING PRODUCTS: THE ANCHORING SYSTEMS SHOWN BELOW HAVE BEEN USED IN THE ANCHOR DESIGNS SHOWN IN THE CONSTRUCTION DOCUMENTS. SUBSTITUTION REQUESTS FOR ALTERNATE PRODUCTS MUST BE APPROVED IN WRITING BY THE ENGINEER OF RECORD PRIOR TO USE. CONTRACTOR SHALL PROVIDE CALCULATIONS DEMONSTRATING THAT THE SUBSTITUTED PRODUCT IS CAPABLE OF ACHIEVING THE PERFORMANCE VALUES OF THE SPECIFIED PRODUCT. SUBSTITUTIONS WILL BE EVALUATED BY THEIR HAVING AN ICC ESR SHOWING COMPLIANCE WITH THE RELEVANT BUILDING CODE FOR SEISMIC USES, LOAD RESISTANCE, INSTALLATION CATEGORY, AND AVAILABILITY OF COMPREHENSIVE INSTALLATION INSTRUCTIONS. ADHESIVE ANCHOR EVALUATION WILL ALSO CONSIDER CREEP, IN-SERVICE TEMPERATURE AND INSTALLATION TEMPERATURE.

1) ANCHORAGE TO CONCRETE

A) ADHESIVE ANCHORS:
(1) HILTI HIT-HY 200 SYSTEM WITH HILTI HIT-Z ROD OR HAS-E THREADED ROD [ICC ESR-3187].
(2) HILTI HIT-RE 500 V3 SYSTEM WITH HILTI HAS-E THREADED ROD [ICC ESR-3814].

B) MEDIUM DUTY MECHANICAL ANCHORS:
(1) HILTI KWIK HUS-EZ AND KWIK HUS-EZ I SCREW ANCHORS [ICC ESR-3027]
(2) HILTI KWIK BOLT-TZ EXPANSION ANCHORS [ICC ESR-1917].
(3) HILTI KWIK BOLT 3 EXPANSION ANCHORS (UNCRACKED CONCRETE ONLY) [ICC ESR-2302]

C) HEAVY DUTY MECHANICAL ANCHORS:
(1) HILTI HDA UNDERCUT ANCHORS [ICC ESR-1546]
(2) HILTI HSL-3 EXPANSION ANCHORS [ICC ESR-1545]

2) REBAR DOWELING INTO CONCRETE

A) ADHESIVE ANCHORS:
(1) HILTI HIT-HY 200 SYSTEM WITH CONTINUOUSLY DEFORMED REBAR [ICC ESR-3187].
(2) HILTI HIT-RE 500 V3 SYSTEM WITH CONTINUOUSLY DEFORMED REBAR [ICC ESR-3814].

D. PREPARATION PRIOR TO INSTALLATION

1) CURING OF BASE MATERIAL: DO NOT DRILL OR CORE HOLES INTO SUPPORTING CONCRETE OR MASONRY MATERIALS UNTIL THE CONCRETE, MORTAR AND/OR GROUT HAVE BEEN ADEQUATELY CURED TO ACHIEVE FULL DESIGN STRENGTH.

2) AVOIDANCE OF EMBEDDED ITEMS: PRIOR TO DRILLING OR CORING OPERATIONS, THE CONTRACTOR SHALL LOCATE AND MARK ALL POTENTIALLY CONFLICTING REINFORCING BARS, UTILITIES AND OTHER EMBEDDED ITEMS BY INDUCTION SCANNING, GROUND PENETRATING RADAR, X-RAY, OR OTHER APPROVED NON-DESTRUCTIVE METHOD. CONTRACTOR SHALL AVOID DRILLING OR CORING HOLES THAT MAY DAMAGE THESE EMBEDDED ITEMS. NOTIFY THE ENGINEER IF CONFLICTING EMBEDDED ITEMS DO NOT ALLOW INSTALLATION OF POST-INSTALLED ANCHORS IN ACCORDANCE WITH THE CONSTRUCTION DOCUMENTS AND/OR APPROVED SHOP DRAWINGS.

E. INSTALLATION

1) ALL DRILLING AND CORING EQUIPMENT AND ALL METHODS FOR INSTALLATION OF POST-INSTALLED ANCHORS AND DOWELS SHALL BE IN ACCORDANCE WITH THE MANUFACTURER'S PRINTED INSTALLATION INSTRUCTIONS (MPII).

2) UNLESS SPECIFICALLY SHOWN OTHERWISE, ALL HOLES SHALL BE INSTALLED PERPENDICULAR TO THE CONCRETE OR MASONRY SURFACE.

3) ANCHOR CAPACITY IS DEPENDENT UPON SPACING BETWEEN ADJACENT ANCHORS AND PROXIMITY OF ANCHORS TO EDGES OF CONCRETE. INSTALL ANCHORS IN ACCORDANCE WITH SPACING AND EDGE CLEARANCES INDICATED ON THE DRAWINGS. ANCHOR SPACING AND EDGE DISTANCE VALUES SHALL NOT BE LESS THAN RECOMMENDED BY THE ANCHOR MANUFACTURER.

F. SPECIAL INSPECTION REQUIREMENTS

1) PER ACI 318-14 SECTION 17.8.2.4, ADHESIVE ANCHORS INSTALLED IN HORIZONTALLY OR UPWARDLY INCLINED ORIENTATIONS SHALL BE CONTINUOUSLY INSPECTED DURING INSTALLATION BY AN INSPECTOR SPECIFICALLY APPROVED FOR THAT PURPOSE BY THE BUILDING OFFICIAL. THE SPECIAL INSPECTOR SHALL FURNISH A REPORT TO THE ENGINEER AND BUILDING OFFICIAL THAT THE WORK COVERED BY THE REPORT HAS BEEN PERFORMED AND THAT THE MATERIALS AND INSTALLATION PROCEDURES USED CONFORM WITH THE APPROVED CONSTRUCTION DOCUMENTS AND THE MANUFACTURER'S PRINTED INSTALLATION INSTRUCTIONS (MPII).

2) PERIODIC SPECIAL INSPECTIONS SHALL BE PROVIDED FOR ALL OTHER POST-INSTALLED ANCHORS NOT INCLUDED IN THE NOTE ABOVE.

A. PARAMETERS FOR EXPANSION AND UNDERCUT ANCHORS
B. PARAMETERS FOR ADHESIVE ANCHORS
C. PROOF LOADING OF ADHESIVE ANCHORS
D. CORROSION PROTECTION FOR EXPOSED ANCHORS INTENDED FOR ATTACHMENT WITH FUTURE WORK.

8. STEEL CONSTRUCTION NOTES

A. GOVERNING STANDARDS: ALL STRUCTURAL STEEL SHALL BE DETAILED, FABRICATED, AND ERECTED IN ACCORDANCE WITH THE FOLLOWING STANDARDS AND AS SUPPLEMENTED BY THESE GENERAL NOTES AND THE PROJECT DRAWINGS AND SPECIFICATIONS.

1) ANSI/AISC 360-10 "SPECIFICATION FOR STRUCTURAL STEEL BUILDINGS" (JUNE 22, 2010).
2) AISC 303-10 "CODE OF STANDARD PRACTICE FOR STEEL BUILDINGS AND BRIDGES" (APRIL 14, 2010).
3) ANSI/AWS "D1.1-STRUCTURAL WELDING CODE - STEEL", 2011 EDITION.
4) RCSC-2010 "SPECIFICATION FOR STRUCTURAL JOINTS USING HIGH-STRENGTH BOLTS" (DECEMBER 31, 2009).

B. STRUCTURAL BOLTS & ANCHOR RODS:

1) STEEL CONTRACTOR SHALL FURNISH ERECTION BOLTS AS REQUIRED FOR FIELD CONNECTIONS.

2) ALL BOLTS SHALL BE 3/4 IN. DIAMETER ASTM A325 WITH SUITABLE WASHERS AND NUTS UNLESS OTHERWISE SHOWN IN THE CONSTRUCTION DOCUMENTS OR APPROVED IN WRITING BY THE OWNER'S REPRESENTATIVE.

3) ALL BOLTS SHALL BE TIGHTENED TO THE SNUG-TIGHTENED JOINT REQUIREMENTS OF RCSC-10 EXCEPT AT SLIP-CRITICAL JOINTS OR WHERE NOTED OTHERWISE IN CONSTRUCTION DOCUMENTS OR IN FABRICATOR'S CONNECTION DESIGN.

4) UNLESS OTHERWISE INDICATED IN THE DRAWINGS, ALL ANCHOR RODS SHALL CONFORM TO THE SPECIFIED MATERIAL GRADE SHALL BE A MINIMUM 3/4 INCH DIAMETER WITH A MINIMUM FOUNDATION EMBEDMENT AS INDICATED IN STRUCTURAL DETAILS. THE EMBEDDED END SHALL HAVE EITHER A STANDARD BOLT HEAD, A HEAVY HEX NUT WITH THE THREADS SPOILED ABOVE AND BELOW THE NUT, OR JAMMED DOUBLE NUTS. BASE PLATES SHALL BE LEVELED WITH LEVELING NUTS AND OVERSIZED WASHER PLATES OR WITH SHIM PACKS AT THE ERECTOR'S OPTION.

5) STEEL PLATE TEMPLATES SHALL BE PROVIDED TO FACILITATE PLACEMENT OF ANCHOR RODS IN DETAILED PLAN POSITIONS AND ELEVATIONS WHILE PLACING CONCRETE.

6) AFTER FINAL BASE PLATE POSITIONING, ANCHOR ROD NUTS SHALL BE INSTALLED TO A SNUG-TIGHT CONDITION AND WASHER PLATES SHALL BE FIELD WELDED AS INDICATED IN THE CONSTRUCTION DOCUMENTS.

C. STEEL FABRICATION & FINISH:

1) SHOP DRAWINGS SHALL BE SUBMITTED TO AND REVIEWED BY THE OWNER'S REPRESENTATIVE PRIOR TO COMMENCING FABRICATION. ANY FABRICATION INITIATED PRIOR TO APPROVAL OF SHOP DRAWINGS WILL BE AT THE SOLE RISK OF THE FABRICATOR.

2) ALL SHOP AND FIELD WELDS SHALL BE MADE IN ACCORDANCE WITH THE ANSI/AWS "D1.1-STRUCTURAL WELDING CODE - STEEL", 2011 EDITION. ALL WELDING SHALL USE LOW HYDROGEN PROCESSES.

3) ALL BEAMS THAT ARE REQUIRED TO HAVE CAMBER SHALL BE FABRICATED WITH CAMBER UPWARD. BEAMS WITHOUT SPECIFIED CAMBER SHALL BE FABRICATED SUCH THAT AFTER ERECTION, ANY NATURAL CAMBER DUE TO ROLLING OR SHOP FABRICATION IS UPWARD.

4) CUTS, HOLES, COPING, ETC. REQUIRED FOR WORK OF OTHER TRADES SHALL BE SHOWN ON THE SHOP DRAWINGS AND MADE IN THE SHOP. CUTS OR BURNING OF HOLES IN STRUCTURAL STEEL MEMBERS IN THE FIELD WILL NOT BE PERMITTED.

5) THE FABRICATOR SHALL BE RESPONSIBLE FOR ALL ERECTION AIDS. ANY SUCH ERECTION AIDS SHALL BE REMOVED FROM THE COMPLETED STRUCTURE IF DIRECTED BY THE OWNER'S REPRESENTATIVE.

6) ALL EXTENSION BARS, RUN-OFF PLATES, AND BACKING BARS USED IN WELDED CONNECTIONS SHALL BE REMOVED AND THE JOINTS SHALL BE GROUND SMOOTH WHERE SUCH CONNECTION IS PERMANENTLY EXPOSED TO VIEW OR IS DESIGNATED AS ARCHITECTURALLY EXPOSED STRUCTURAL STEEL.

7) SHOP PRIMER
A) ALL STEEL EXPOSED TO EXTERIOR WEATHER OR AN UNCONTROLLED ENVIRONMENT SHALL BE BLAST CLEANED AND PRIMED WITH A SUBMITTED AND APPROVED ZINC-RICH PRIMER.
B) INTERIOR STEEL SHALL BE SHOP PRIMED WITH THE FABRICATORS STANDARD SHOP PRIMER.
C) SHOP PRIMER SHALL NOT BE APPLIED TO THE FOLLOWING AREAS:
i) SURFACES EMBEDDED IN CONCRETE OR MORTAR. EXTEND PRIMING OF PARTIALLY EMBEDDED MEMBERS TO A DEPTH OF 2 INCHES.
ii) SURFACES TO BE FIELD WELDED.
iii) SURFACES TO BE HIGH-STRENGTH BOLTED WITH SLIP-CRITICAL CONNECTIONS.
iv) SURFACES TO RECEIVE SPRAYED FIRE-RESISTIVE MATERIALS.
v) GALVANIZED SURFACES.

D. STEEL MISCELLANEOUS:

1) ALL EDGE ANGLES SUPPORTING ROOF OR FLOOR DECK SHALL BE SPLICED OVER SUPPORTS.

2) ALL ELEVATED MECHANICAL EQUIPMENT SHALL BE SUPPORTED BY STEEL FRAMING. IF SPECIFIC FRAMING SIZES ARE NOT PROVIDED ON THE FRAMING PLAN, REFER TYPICAL DETAILS FOR ROOF OPENING FRAME DETAIL.

3) SUBSTITUTION OF POST-INSTALLED ANCHORS FOR EMBEDDED ANCHORS SHOWN ON THE DRAWINGS WILL NOT BE PERMITTED UNLESS SPECIFICALLY APPROVED IN WRITING BY THE STRUCTURAL ENGINEER.

4) WHERE POST-INSTALLED ANCHORS ARE USED IN CONTINUOUS ANGLES, FABRICATE ANGLE WITH OPTIONAL HOLE LOCATIONS TO ALLOW REMEDIATION OF CASES WHERE ANCHORS FOUL WITH REBAR. AS AN EXAMPLE, FOR A CONTINUOUS ANGLE WITH ANCHORS AT 24" ON CENTER, PROVIDE HOLES AT 6" ON CENTER.

Kirkpatrick Forest Curtis PC
Structural Engineering
OK CA #3888, EXP. 06/30/23
525 Central Park Drive, Suite 202
Oklahoma City, OK 73105
405.528.4596 | kfcengr.com

THE MCKINNEY PARTNERSHIP
architects
3600 West Main
Suite 200
Norman, Oklahoma
73072
405.360.1400 p
405.364.8287 f
tmparch.com

Copyright © 2008 The McKinney Partnership Architects, P.C., All Rights Reserved

Seal:

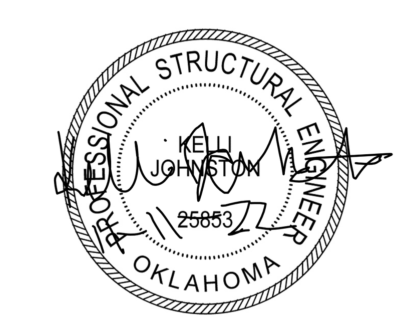

Project:

City of Norman
Municipal Complex Renovation
Municipal Court
321 N. Webster Avenue
Norman, OK

Issue Date:
11/15/22 ISSUED FOR BIDDING

Revisions:

Project Number:
CM083319

Sheet Title:
GENERAL NOTES

Sheet Number:
S1.1

1. STATEMENT OF SPECIAL INSPECTIONS NOTES:

A. THIS STATEMENT OF SPECIAL INSPECTIONS IS INCLUDED AS REQUIRED BY SECTION 1704.3 OF CHAPTER 17 OF 2015 INTERNATIONAL BUILDING CODE.

B. SPECIAL INSPECTIONS SHALL CONFORM TO CHAPTER 17 OF THE 2015 INTERNATIONAL BUILDING CODE, AISC 360, AND ACI 530 AS SUMMARIZED HEREIN. GENERAL REQUIREMENTS ARE LISTED BELOW AND IN THE ATTACHED INSPECTION TABLES.

C. REFER TO PROJECT SPECIFICATIONS FOR ADDITIONAL SPECIAL INSPECTION REQUIREMENTS. IF CONFLICTING REQUIREMENTS ARE FOUND BETWEEN STATEMENTS OF SPECIAL INSPECTIONS AND THE PROJECT SPECIFICATIONS, THE MORE STRINGENT PROVISION SHALL CONTROL UNLESS DIRECTED OTHERWISE IN WRITING BY THE STRUCTURAL ENGINEER OF RECORD.

D. THE OWNER SHALL EMPLOY ONE OR MORE SPECIAL INSPECTORS FOR THIS PROJECT. THE SPECIAL INSPECTOR SHALL BE A QUALIFIED PERSON WHO SHALL DEMONSTRATE COMPETENCE, TO THE SATISFACTION OF THE BUILDING OFFICIAL, FOR THE INSPECTION OF THE PARTICULAR TYPE OF CONSTRUCTION OR OPERATION REQUIRING SPECIAL INSPECTION.

E. PRIOR TO THE START OF CONSTRUCTION, EACH SPECIAL INSPECTOR SHALL PROVIDE WRITTEN DOCUMENTATION TO THE BUILDING OFFICIAL DEMONSTRATING HIS OR HER COMPETENCE AND RELEVANT EXPERIENCE OR TRAINING. EXPERIENCE OR TRAINING SHALL BE CONSIDERED RELEVANT WHEN THE DOCUMENTED EXPERIENCE OR TRAINING IS RELATED IN COMPLEXITY TO THE SAME TYPE OF SPECIAL INSPECTION ACTIVITIES FOR PROJECTS OF SIMILAR COMPLEXITY AND MATERIAL QUALITIES.

F. THE CONTRACTOR SHALL MAINTAIN ACCESS FOR THE SPECIAL INSPECTOR. THE CONSTRUCTION OR WORK FOR WHICH SPECIAL INSPECTION OR TESTING IS REQUIRED SHALL REMAIN ACCESSIBLE AND EXPOSED FOR SPECIAL INSPECTION OR TESTING PURPOSES UNTIL COMPLETION OF THE REQUIRED SPECIAL INSPECTION OR TESTING.

G. THE CONTRACTOR IS RESPONSIBLE FOR PROVIDING REASONABLE NOTICE TO THE SPECIAL INSPECTOR(S) REGARDING WHEN ELEMENTS OF THE PROJECT WILL BE READY FOR EFFICIENT IMPLEMENTATION OF SPECIAL INSPECTIONS.

H. THE CONTRACTOR SHALL PROVIDE ACCESS TO THE LATEST VERSION OF ALL APPROVED PLANS AND SHOP DRAWINGS FOR THE SPECIAL INSPECTOR'S USE IN PERFORMING SPECIAL INSPECTIONS.

I. CONTRACTOR SHALL GRANT ACCESS TO OWNER'S SPECIAL INSPECTOR AS IS REASONABLY NECESSARY FOR THE PROPER PERFORMANCE OF SPECIAL INSPECTIONS.

J. SPECIAL INSPECTIONS DO NOT RELIEVE THE CONTRACTOR OF RESPONSIBILITY TO COMPLY WITH ALL REQUIREMENTS OF THE CONTRACT DOCUMENTS. CONSTRUCTION MEANS AND METHODS AND JOBSITE SAFETY ARE SOLELY THE RESPONSIBILITY OF THE CONTRACTOR.

K. APPROVED SPECIAL INSPECTORS SHALL KEEP RECORDS OF THEIR SPECIAL INSPECTIONS AND TESTS. THE SPECIAL INSPECTOR SHALL SUBMIT REPORTS OF SPECIAL INSPECTIONS AND TESTS TO THE BUILDING OFFICIAL AND TO THE REGISTERED DESIGN PROFESSIONALS IN RESPONSIBLE CHARGE. REPORTS SHALL INDICATE THAT WORK INSPECTED OR TESTED WAS OR WAS NOT COMPLETED IN CONFORMANCE TO APPROVED CONSTRUCTION DOCUMENTS. DISCREPANCIES SHALL BE BROUGHT TO THE IMMEDIATE ATTENTION OF THE BUILDING OFFICIAL AND TO THE REGISTERED DESIGN PROFESSIONAL IN RESPONSIBLE CHARGE PRIOR TO THE COMPLETION OF THAT PHASE OF THE WORK. A FINAL REPORT DOCUMENTING REQUIRED SPECIAL INSPECTIONS AND TESTS, AND CORRECTION OF DISCREPANCIES SHALL BE SUBMITTED AT A POINT IN TIME AGREED UPON PRIOR TO THE START OF WORK BY THE OWNER OR OWNER'S AUTHORIZED AGENT TO THE BUILDING OFFICIAL.

L. SPECIAL INSPECTION OF FABRICATED ITEMS: WHERE FABRICATION OF STRUCTURAL, LOAD-BEARING OR LATERAL LOAD-RESISTING MEMBERS OR ASSEMBLIES IS BEING CONDUCTED ON THE PREMISES OF A FABRICATOR'S SHOP, SPECIAL INSPECTION OF FABRICATED ITEMS SHALL BE PERFORMED DURING FABRICATION. THIS REQUIREMENT MAY BE WAIVED IF THE EXCEPTIONS OUTLINED BELOW ARE MET.

1) EXCEPTION 1: SPECIAL INSPECTIONS DURING FABRICATION ARE NOT REQUIRED WHERE THE FABRICATOR MAINTAINS APPROVED DETAILED FABRICATION AND QUALITY CONTROL PROCEDURES THAT PROVIDE A BASIS FOR CONTROL OF THE WORKMANSHIP AND THE FABRICATOR'S ABILITY TO CONFORM TO APPROVED CONSTRUCTION DOCUMENTS AND IBC 2015. APPROVAL SHALL BE BASED UPON REVIEW OF FABRICATION AND QUALITY CONTROL PROCEDURES AND PERIODIC INSPECTION OF FABRICATION PRACTICES BY THE BUILDING OFFICIAL.

2) EXCEPTION 2: SPECIAL INSPECTIONS ARE NOT REQUIRED WHERE THE FABRICATOR IS REGISTERED AND APPROVED IN ACCORDANCE WITH SECTION 1704.2.5.1 OF IBC 2015.

A) FABRICATOR APPROVAL: SPECIAL INSPECTIONS DURING FABRICATION ARE NOT REQUIRED WHERE THE WORK IS DONE ON THE PREMISES OF FABRICATOR REGISTERED AND APPROVED TO PERFORM SUCH WORK WITHOUT SPECIAL INSPECTION. APPROVAL SHALL BE BASED UPON REVIEW OF THE FABRICATOR'S WRITTEN PROCEDURAL AND QUALITY CONTROL MANUALS AND PERIODIC AUDITING OF FABRICATION PRACTICES BY AN APPROVED AGENCY. AT COMPLETION OF FABRICATION, THE APPROVED FABRICATOR SHALL SUBMIT A CERTIFICATE OF COMPLIANCE TO THE OWNER OR OWNER'S AUTHORIZED AGENT FOR SUBMITTAL TO THE BUILDING OFFICIAL AS SPECIFIED IN SECTION 1704.5 OF IBC 2015 STATING THAT THE WORK WAS APPROVED IN ACCORDANCE WITH THE APPROVED CONSTRUCTION DOCUMENTS.

M. PER IBC SECTION 1704.3.2, THE SEISMIC FORCE RESISTING SYSTEMS FOR THIS FACILITY ARE DEFINED IN THE "DESIGN LOADS" SECTION OF THE GENERAL NOTES. NOTE THAT PER IBC SECTION 1705.12.1.1, THE EXCEPTION IS ENVOKED FOR STEEL SYSTEMS WITH AN R=3 AND A SEISMIC DESIGN CATEGORY C.

2. REQUIRED SPECIAL INSPECTIONS AND TESTS

A. THE SPECIAL INSPECTOR SHALL PROVIDE CONTINUOUS OR PERIODIC INSPECTIONS AS SHOWN IN THE ATTACHED INSPECTION TABLES.

1) CONTINUOUS INSPECTION: THE SPECIAL INSPECTOR SHALL BE PRESENT AT ALL PROCEDURAL EVENTS.

2) PERIODIC INSPECTION: THE SPECIAL INSPECTOR SHALL BE PRESENT AT THE START OF THE WORK AND PERIODIC INSPECTION IS MADE TO VERIFY PROGRESS OF WORK IS IN COMPLIANCE.

B. STRUCTURAL STEEL AND DECKING

1) STEEL QUALITY CONTROL AND QUALITY ASSURANCE

A) QUALITY CONTROL (QC) AS SPECIFIED IN AISC 360 CHAPTER N AND SUMMARIZED HEREIN SHALL BE PROVIDED BY THE FABRICATOR AND ERECTOR.

B) QUALITY ASSURANCE (QA) AS SPECIFIED IN AISC 360 CHAPTER N AND SUMMARIZED HEREIN SHALL BE PROVIDED BY AN INDEPENDENT INSPECTOR.

C) NONDESTRUCTIVE TESTING (NDT) SHALL BE PERFORMED BY THE AGENCY OR FIRM RESPONSIBLE FOR QUALITY ASSURANCE (QA).

D) COORDINATED INSPECTION: WHERE A TASK IS NOTED TO BE PERFORMED BY BOTH QC AND QA, IT IS PERMITTED TO COORDINATE THE INSPECTION FUNCTION BETWEEN THE QUALITY CONTROL INSPECTOR (QCI) AND QUALITY ASSURANCE INSPECTOR (QAI) SO THAT THE INSPECTION FUNCTIONS ARE PERFORMED BY ONE PARTY. THE QAI SHALL PERFORM COORDINATED INSPECTION UNLESS OTHERWISE AUTHORIZED BY THE EOR AND AHJ.

2) STEEL QUALITY INSPECTOR QUALIFICATIONS

A) QUALITY CONTROL INSPECTOR (QAC) OF ERECTOR/FABRICATOR SHALL BE QUALIFIED TO THE SATISFACTION OF THE ERECTOR/ FABRICATOR'S QC PROGRAM AND AISC 360 SECTION N.4.1 REQUIREMENTS.

B) QUALITY ASSURANCE INSPECTOR (QAI) SHALL BE QUALIFIED BY A QA AGENCY AND AISC 360 SECTION N.4.2 REQUIREMENTS.

C) NON-DESTRUCTIVE TESTING PERSONNEL, OR OTHER THAN VISUAL, SHALL BE QUALIFIED IN ACCORDANCE WITH EMPLOYER'S WRITTEN PRACTICE MEETING OR EXCEEDING REQUIREMENTS OF AWS D1.1/D1.1M AND EITHER ANST SNT-TC-1A OR ANST CP-189 REQUIREMENTS.

3) INSPECTION/APPROVAL OF STEEL FABRICATORS: WHERE FABRICATION OF STRUCTURAL STEEL LOADBEARING MEMBERS AND ASSEMBLIES IS BEING PERFORMED ON THE PREMISES OF A STEEL FABRICATOR'S SHOP, REFER TO PARAGRAPH 1.L ABOVE.

4) REFER ATTACHED TABLES FOR SPECIAL INSPECTIONS AND TESTING FOR STEEL CONSTRUCTION.

C. CONCRETE CONSTRUCTION

1) SPECIAL INSPECTIONS AND TESTS OF CONCRETE CONSTRUCTION SHALL BE PERFORMED IN ACCORDANCE WITH ITEMS IDENTIFIED IN IBC TABLE 1705.3.

2) IBC SECTION 1705.3, EXCEPTION 1 DOES NOT REQUIRE SPECIAL INSPECTIONS FOR ISOLATED FOOTINGS OF BUILDINGS LESS THAN THREE STORIES IN HEIGHT THAT ARE FULLY SUPPORTED ON EARTH OR ROCK. NOTE THAT ALL ISOLATED FOOTINGS IN THE GYMNASIUM AND ISOLATED FOOTINGS IN THE CLASSROOM BUILDING SUPPORTING COLUMNS AND/OR DIAGONALS ASSOCIATED WITH THE LATERAL BRACING SYSTEM SHALL BE SPECIALLY INSPECTED AND TESTED.

D. SOILS

1) REQUIRED SPECIAL INSPECTIONS AND SOIL TESTS ARE AS SHOWN IN TABLE 1705.6 OF IBC.

2) HELICAL PIERS ARE TO BE PERFORMANCE SPECIFIED. THE CONTRACTOR SHALL MAKE APPROVED SUBMITTALS AVAILABLE TO THE SPECIAL INSPECTOR. GRADATION VERIFICATION OF RAMMED EARTH IS REQUIRED. VERIFICATION OF PLACEMENT TECHNIQUES AND VIBRATORY EQUIPMENT IS REQUIRED FOR SPECIAL INSPECTION AS WELL.

TABLE 1705.3
REQUIRED SPECIAL INSPECTIONS AND TESTS OF CONCRETE CONSTRUCTION

TYPE	CONTINUOUS SPECIAL INSPECTION	PERIODIC SPECIAL INSPECTION	REFERENCED STANDARD	IBC REFERENCE
1) Inspect reinforcement, including prestressing tendon, and verify placement.	-	X	ACI 318 Ch. 20, 25.2, 25.3, 26.6.1-26.6.3	1908.4
2) Reinforcing bar welding:				
a) Verify weldability of reinforcing bars other than ASTM A706;	-	X	AWS D1.4 ACI 318: 26.5.4	-
b) Inspect single-pass fillet welds, maximum 5/16"; and	-	X		
c) Inspect all other welds.	X	-		
3) Inspect anchors cast in concrete.	-	X	ACI 318:17.8.2	-
4) Inspect size, embedment, and installation of post-installed anchors.	X	-	Manuf. Requirements	
5) Verify use of required design mix.	-	X	ACI 318: Ch. 19, 26.4.3, 26.4.4	1904.1, 1904.2, 1908.2, 1908.3
6) Prior to concrete placement, fabricate specimens for strength tests, perform slump and air content tests, and determine the temperature of the concrete.	X	-	ASTM C 172 ASTM C 31 ACI 318: 26.4, 26.12	1908.10
7) Inspect concrete and shotcrete placement for proper application techniques.	X	-	ACI 318: 26.5	1908.6, 1908.7, 1908.8
8) Verify maintenance of specified curing temperature and techniques.	-	X	ACI 318: 26.5.3-26.5.5	1908.9
9) Inspect prestressed concrete for:				
a) Application of prestressing forces; and	X	-	ACI 318: 26.10	-
b) Grouting of bonded prestressing tendons.	X	-		
10) Inspect erection of precast concrete members.	-	X	ACI 318: Ch. 26.8	-
11) Verify in-situ concrete strength, prior to stressing of tendons in post-tensioned concrete and prior to removal of shores and forms from beams and structural slabs.	-	X	ACI 318: 26.11.2	-
12) Inspect formwork for shape, location and dimensions of the concrete member being formed.	-	X	ACI 318: 26.11.1.2(b)	-

REQUIRED VERIFICATION AND INSPECTION OF STEEL CONSTRUCTION

VERIFICATION AND INSPECTION	FREQUENCY OF INSPECTION: CONTINUOUS (inspect each joint/member)	FREQUENCY OF INSPECTION: PERIODIC (inspect random joint/members)	REFERENCED STANDARD
5. Inspection of welding:			
a. AISC 360 requirements for welding structural steel			
1) Use of qualified welders	-	QC and QA	AISC 360, Table N5.4-2 During Welding
2) Packaging and exposure control and handling of welding consumables.	-	QC and QA	
3) Welding over cracked tack welds	-	QC and QA	
4) Environmental conditions including but not limited to precipitation, temperature and wind.	-	QC and QA	
5) Verify settings on equipment, travel speeds, elected materials, shielding gas type/floow rate, preheating interpass temperatures and proper position meets WPS standards.	-	QC and QA	
6) Verify welding techniques for interpass, final cleaning, profile limitations, and quality requirements.	-	QC and QA	
7) Welds are cleaned and painted where required.	-	QC and QA	AISC 360, Table N5.4-2 After Welding
8) Verify size, length and locations of welds.	QC and QA	-	
9) Visually verify welds for crack prohibition, weld/base-metal fusion, crater cross section, weld profiles, weld size, undercutting, and porosity.	QC and QA	-	
10) Arc strikes, k-area cracks within 3" of weld, removal of backing, and repair activities as applicable.	QC and QA	-	
11) Documentation of acceptance or rejection of welded joint or member.	QC and QA	-	
b. American Welding Society requirements for structural steel and cold-formed steel deck:			
1) Complete and partial joint penetration groove welds.	X	-	AWS D1.1
2) Multipass fillet welds.	X	-	
3) Single-pass fillet welds > 5/ 16"	X	-	
4) Plug and slot welds.	X	-	
5) Single-pass fillet welds ≤ 5/ 16"	-	X	
6) Floor and roof deck welds.	-	X	AWS D1.3
7) Welded studs & deformed bar anchors (DBA's).	-	X	AWS D1.1
8) Welded sheet steel for cold-formed steel members	-	X	AWS D1.3
9) Welding of stairs & railing systems	-	X	AWS D1.1
c. Reinforcing steel:			AWS D1.4, ACI 318: Section 3.5.2
1) Verification of weldability of reinforcing steel other than ASTM A 706.	-	X	
2) Reinforcing steel resisting flexural and axial forces in intermediate and special moment frames, and boundary elements of special structural walls of concrete and shear reinforcement.	X	-	
3) Shear reinforcement.	X	-	
4) Other reinforcing steel.	-	X	
6. Inspection of steel elements of composite construction prior to concrete placement:			
a. Placement and installation of steel deck.	QC and QA	-	AISC 360, Table N6.1
b. Placement and installation of steel HSA.	QC and QA	-	AISC 360, Table N6.1
c. Documentation of acceptance or rejection of steel elements.	QC and QA	-	AISC 360, Table N6.1

TABLE 1705.6
REQUIRED SPECIAL INSPECTIONS AND TESTS OF SOILS

TYPE	CONTINUOUS SPECIAL INSPECTION	PERIODIC SPECIAL INSPECTION
1. Verify materials below shallow foundations are adequate to achieve the design bearing capacity.	-	X
2. Verify excavations are extended to proper depth and have reached proper material.	-	X
3. Perform classification and testing of compacted fill materials.	-	X
4. Verify use of proper materials, densities and lift thicknesses during placement and compaction of compacted fill.	X	-
5. Prior to placement of compacted fill, inspect subgrade and verify that site has been prepared properly.	-	X

REQUIRED VERIFICATION AND INSPECTION OF STEEL CONSTRUCTION

VERIFICATION AND INSPECTION	FREQUENCY OF INSPECTION: CONTINUOUS (inspect each joint/member)	FREQUENCY OF INSPECTION: PERIODIC (inspect random joint/members)	REFERENCED STANDARD
1. Material verification of high-strength bolts, nuts and washers:			
a. Identification markings to conform to ASTM standards specified in the approved construction documents.	-	QC and QA	AISC 360, Section A3.3 and applicable ASTM material standards
b. Manufacturer's certifications available for fastener materials.	QA	QC	AISC 360, Table N5.6-1
c. Fasteners marked in accordance with ASTM requirements.	-	QC and QA	
d. Proper fasteners selected for the joint detail (grade, type, bolt length if threads are to be excluded from shear plane).	-	QC and QA	
e. Proper bolting procedure selected for joint detail.	-	QC and QA	
f. Connecting elements, including the appropriate faying surface condition and hole preparation, if specified, meet applicable requirements.	-	QC and QA	
g. Pre-installation verification testing by installation personnel observed and documented for fastener assemblies and methods used.	QC	QA	
h. Proper storage provided for bolts, nuts, washers and other fastener components.	-	QC and QA	
2. Inspection of high-strength bolting:			
• For bolts requiring pretensioning, the special inspector shall observe the preinstallation testing and calibration procedures; determine that all plies of connected materials have been drawn together and properly snugged prior to pretentioning and monitor the installation of bolts to verify that fasteners are pretensioned in accordance with the RCSC Specification, progressing systematically from the most rigid point to the free edges. • For joints required to be tightened only to the snug-tight condition, the special inspector need only verify that the connected materials have been drawn together and properly snugged.			
a. Snug-tight joints.	-	QC and QA	AISC 360, Section M2.5
b. Pretensioned and slip-critical joints using turn-of-nut with matchmarking, twist-off bolt or direct tension indicator methods of installation.	-	QC and QA	
c. Pretensioned and slip-critical joints using turn-of-nut without matchmarking or calibrated wrench methods of installation.	QC and QA	-	
d. Fastener assemblies, of suitable condition, placed in all holes and washers (if required) are positioned as required.	-	QC and QA	AISC 360, Table N5.6-2
e. Fastener component not turned by the wrench prevented from rotating.	-	QC and QA	
f. Document acceptance or rejection of bolted connections.	QC and QA	-	AISC 360, Table N5.6-3
3. Material verification of structural steel and cold-formed steel deck U.N.O.:			
a. For structural steel, identification markings to conform to AISC 360.	-	QC and QA	AISC 360, Section M1
b. For other steel, identification markings to conform to ASTM standards specified in the approved construction documents.	-	QC and QA	Applicable ASTM material standards
4. Inspection prior to welding:			
a. Verify identification markings of weld filler materials conform to AWS specification in the approved construction documents.	-	QC and QA	AISC 360, Section A3.5 and applicable AWS AS documents
b. Welding procedure specifications are available.	QC and QA	-	AISC 360, Table N5.4-1
c. Manufacturer certifications for welding consumables available.	QC and QA	-	
d. Material identification (type/grade) and welded identification system.	-	QC and QA	
e. Fit-up of welds including but not limited to joint preparation, dimensions, cleanliness, tacking, and backing type/fit as applicable.	-	QC and QA	
f. Configuration and finish of access holes	-	QC and QA	
g. Check welding equipment.	-	QC	

KFC engineering
Kirkpatrick Forest Curtis PC
Structural Engineering
OK CA #3888, EXP. 06/30/23
525 Central Park Drive, Suite 202
Oklahoma City, OK 73105
405.528.4596 | kfcengr.com

THE MCKINNEY PARTNERSHIP
architects
3600 West Main
Suite 200
Norman, Oklahoma
73072
405.360.1400 p
405.364.8287 f
tmparch.com

Copyright © 2008 The McKinney Partnership Architects, P.C., All Rights Reserved

Seal:

Project:

City of Norman
Municipal Complex Renovation
Municipal Court
321 N. Webster Avenue
Norman, OK

Issue Date:
11/15/22 ISSUED FOR BIDDING

Revisions:

Project Number:
CM083319

Sheet Title:
SPECIAL INSPECTION

Sheet Number:
S1.2

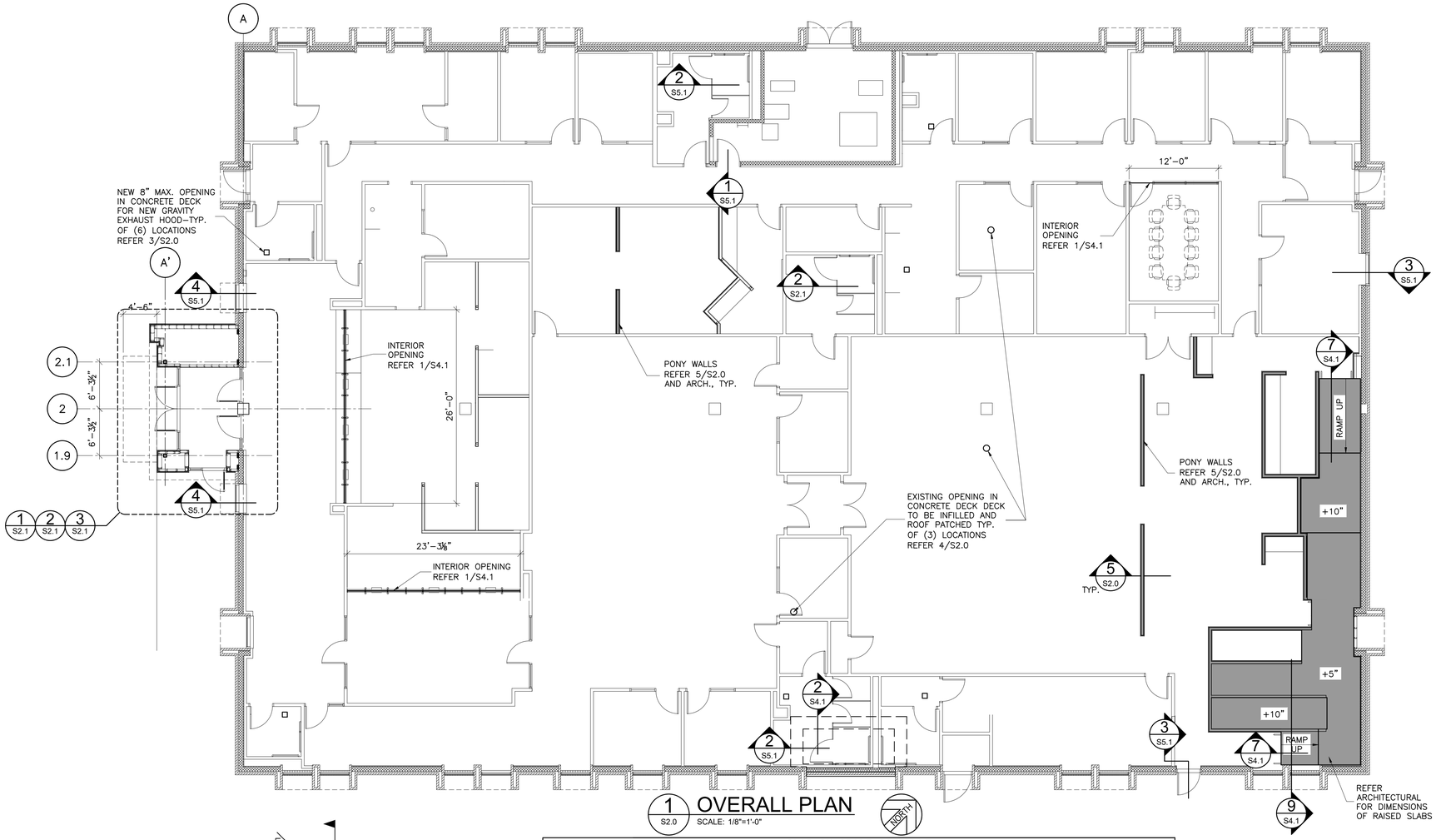

1 OVERALL PLAN
S2.0 SCALE: 1/8"=1'-0"

TENSION DEVELOPMENT AND LAP–SPLICE LENGTHS FOR UNCOATED REINFORCING BARS

BAR SIZE	LAP CLASS	LENGTHS (IN.) PER CONCRETE STRENGTH f'c=4000 psi (NORMAL WEIGHT) TOP BARS CASE 1	TOP BARS CASE 2	OTHER BARS CASE 1	OTHER BARS CASE 2
#3	A	19	28	15	22
	B	24	36	19	28
#4	A	25	37	19	29
	B	32	48	25	37
#5	A	31	47	24	36
	B	40	60	31	47
#6	A	37	56	29	43
	B	48	72	37	56
#7	A	54	81	42	63
	B	70	106	54	81
#8	A	62	93	48	71
	B	80	121	62	93
#9	A	70	105	54	81
	B	91	136	70	105
#10	A	79	118	61	91
	B	102	153	79	118
#11	A	87	131	67	101
	B	113	170	87	131
#14	N/A	105	157	81	121
#18	N/A	139	209	107	161

2 REINFORCING LAP LENGTHS
S2.0 SCALE: NONE

NOTES: 1 in.=25.4 mm.

1. TABULATED VALUES ARE BASED ON GRADE 60 REINFORCING BARS AND NORMAL WEIGHT CONCRETE. LENGTHS ARE IN INCHES.
2. TENSION DEVELOPMENT LENGTHS AND TENSION LAP–SPLICE LENGTHS ARE CALCULATED PER ACI 318, SECTIONS 25.4 AND 25.5, RESPECTIVELY. TABULATED VALUES FOR BEAMS OR COLUMNS ARE BASED ON TRANSVERSE REINFORCEMENT AND CONCRETE COVER MEETING MINIMUM CODE REQUIREMENTS.
3. CASES 1 AND 2, WHICH DEPEND ON THE TYPE OF STRUCTURAL ELEMENT, CONCRETE COVER, AND CENTER–TO–CENTER SPACING OF THE BARS, ARE DEFINED AS: BEAMS OR COLUMNS: CASE 1–COVER AT LEAST $1.0d_b$ AND CENTER–TO–CENTER SPACING AT LEAST $2.0d_b$ AND CASE 2–COVER LESS THAN $1.0d_b$ OR CENTER–TO–CENTER SPACING LESS THAN $2.0d_b$. ALL OTHERS: CASE 1–COVER AT LEAST $1.0d_b$ AND CENTER–TO–CENTER SPACING AT LEAST $3.0d_b$. CASE 2–COVER LESS THAN $1.0d_b$ OR CENTER–TO–CENTER SPACING LESS THAN $3.0d_b$.
4. LAP SPLICE LENGTHS ARE MULTIPLES OF TENSION DEVELOPMENT LENGTHS; CLASS A=$1.0l_d$ AND CLASS B=$1.3l_d$ (ACI 318, SECTION 25.5.2).
5. ACI 318 DOES NOT ALLOW TENSION LAP SPLICES OF #14 OR #18 BARS. THE TABULATED VALUES FOR THOSE BAR SIZES ARE THE TENSION DEVELOPMENT LENGTHS.
6. TOP BARS ARE HORIZONTAL BARS WITH MORE THAN 12 in. OF CONCRETE CAST BELOW THE BARS.
7. FOR LIGHTWEIGHT–AGGREGATE CONCRETE, MULTIPLY THE TABULATED VALUES BY 1.3.

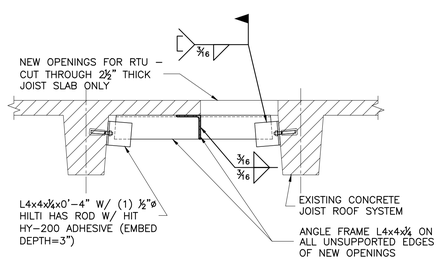

3 SECTION AT NEW GRAVITY HOOD
S2.0 SCALE: 1"=1'-0"

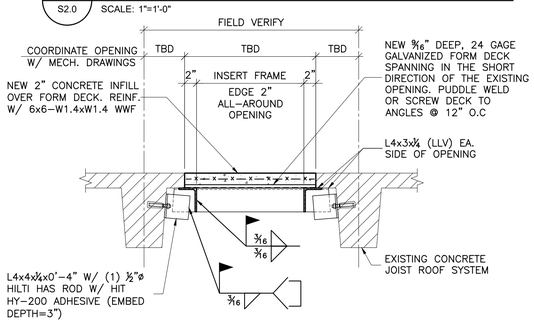

4 SECTION AT IN-FILLED OPENING
S2.0 SCALE: 1"=1'-0"

SLAB-ON-GRADE SCHEDULE

SLAB THICKNESS, T	SLAB REINFORCING: BAR SIZE & SPACING	SLAB REINFORCING: CLEAR COVER ABOVE TOP BARS	SLAB REINFORCING: CHAIR HEIGHT BELOW BOTTOM BARS	CONTRACTION JOINTS: MAXIMUM SPACING OF JOINTS	CONTRACTION JOINTS: DEPTH OF SAW CUT	SMOOTH DOWELS AT CONSTRUCTION JOINTS
4"	#3 @ 15" EW	1.50"	1.75"	12 FT.	1.00"	3/4" DIA. X 14" @ 12" O.C.
5"	#3 @ 12" EW	1.50"	2.75"	13 FT.	1.25"	3/4" DIA. X 14" @ 12" O.C.

SLAB-ON-GRADE JOINT NOTES:

1. THE SLAB-ON-GRADE CONTRACTION JOINTS SHOWN ON THE PLANS SHALL BE CONSIDERED THE MINIMUM NUMBER OF JOINTS REQUIRED. THE CONTRACTOR MAY ADD ADDITIONAL CONTRACTION JOINTS PROVIDED THEY COMPLY WITH THE REQUIREMENTS OUTLINED HEREIN.

2. UNLESS SPECIFICALLY INDICATED AS A CONSTRUCTION JOINT ON PLANS, SLAB JOINTS SHOWN ON THE PLANS MAY BE EITHER SAWCUT JOINTS OR DOWELED CONSTRUCTION JOINTS AT THE CONTRACTOR'S OPTION.

3. A SLAB JOINT LAYOUT PLAN SHALL BE SUBMITTED BY THE CONTRACTOR FOR REVIEW AND APPROVAL BY THE ARCHITECT AND ENGINEER A MINIMUM OF 3 WEEKS PRIOR TO SCHEDULED PLACEMENT OF ANY CONCRETE SLABS-ON-GRADE.

4. IN ORDER TO MINIMIZE THE RISK OF BAR CHAIR DISPLACEMENT DURING CONCRETE PLACEMENT OPERATIONS, CONTINUOUS SLAB BOLSTERS SHALL BE USED TO SUPPORT THE BOTTOM REINFORCING BARS.

5. CONCRETE POURS EITHER SIDE OF CONSTRUCTION JOINTS SHALL NOT BE CONCURRENT. CONCRETE SHALL BE ALLOWED TO CURE A MINIMUM OF 7 DAYS PRIOR TO SECOND CONCRETE PLACEMENT.

6. UNLESS INDICATED OTHERWISE ON THE PLANS, CONTRACTION JOINTS SHALL BE LOCATED ON COLUMN GRID LINES WITH ADDITIONAL OFF-GRID LOCATIONS AS REQUIRED TO ACHIEVE THE MAXIMUM JOINT SPACING INDICATED ABOVE.

7. CONTRACTION JOINT SPACING IN EACH DIRECTION SHALL RESULT IN RECTANGULAR SLAB PANELS WITH A MAXIMUM LENGTH-TO-WIDTH RATIO OF 1.5 FOR EACH PANEL; HOWEVER SQUARE PANELS WITH A RATIO OF 1 TO 1 ARE PREFERRED.

8. SAWCUT CONTRACTION JOINTS SHALL BE CONTINUOUS ACROSS INTERSECTING JOINTS AND SHALL NOT BE STAGGERED OR OFFSET.

9. AT ALL SAWCUT CONTRACTION JOINTS, ALTERNATE REINFORCING BARS SHALL BE CUT BACK APPROXIMATELY 3 IN. AWAY FROM THE JOINT AND ON EACH SIDE OF THE JOINT SO THAT ONLY HALF THE NUMBER OF BARS CROSS THE JOINT.

10. REBAR LAPS SHALL NOT OCCUR AT CONTRACTION JOINTS.

11. CONTRACTOR SHALL USE AN EARLY-ENTRY DRY-CUT SAW TO CUT ALL SAWCUT CONTRACTION JOINTS.

    a. SAWED JOINTS SHALL BE INSTALLED ON THE SAME DAY THAT THE CONCRETE IS PLACED AND BEFORE THE COOLER AMBIENT TEMPERATURES OF NIGHT OCCUR.

    b. EARLY-ENTRY SAW CUTTING OPERATIONS SHALL COMMENCE IN 1 TO 4 HOURS AFTER COMPLETING THE FINISHING OF THE SLAB AT THAT JOINT LOCATION. COMMENCE IN APPROXIMATELY 1 HOUR IN HOT WEATHER OR 4 HOURS IN COLD WEATHER.

    C. THE EARLY-ENTRY SAW SHALL INCLUDE AN ANTI-RAVEL SKID PLATE TO MINIMIZE THE RISK OF CHIPPING AND SPALLING SAW CUTTING OPERATIONS. SKID PLATES SHALL BE CHANGED IN A TIMELY MANNER IN ACCORDANCE WITH MANUFACTURER'S RECOMMENDATIONS.

REFERENCES:

1. REINFORCING QUANTITY:
   a. ACI 224.4R-13 *GUIDE TO DESIGN DETAILING TO MITIGATE CRACKING*, PAGE 17.

2. CONTRACTION JOINT SPACING:
   a. ACI 224.4R-13 *GUIDE TO DESIGN DETAILING TO MITIGATE CRACKING*, FIGURE 8.2D.
   b. ACI 360R-10 *GUIDE TO DESIGN OF SLABS ON GROUND*, FIGURE 6-12.

3. DOWELS FOR CONSTRUCTION AND CONTRACTION JOINTS:
   a. ACI 360R-10 *GUIDE TO DESIGN OF SLABS ON GROUND*, TABLE 6.1.

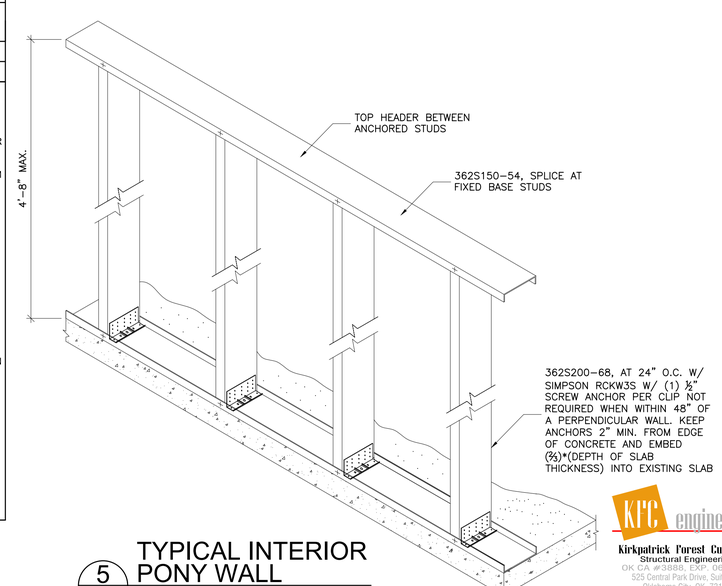

5 TYPICAL INTERIOR PONY WALL
S2.0 SCALE: NONE

KFC engineering
Kirkpatrick Forest Curtis PC
Structural Engineering
OK CA #:3888, EXP. 06/30/23
525 Central Park Drive, Suite 202
Oklahoma City, OK 73105
405.528.4596 | kfcengr.com

THE MCKINNEY PARTNERSHIP
architects
3600 West Main
Suite 200
Norman, Oklahoma
73072
405.360.1400 p
405.364.8287 f
tmparch.com

Copyright © 2008 The McKinney Partnership Architects, P.C., All Rights Reserved

Seal:

Project:

City of Norman
Municipal Complex Renovation
Municipal Court
321 N. Webster Avenue
Norman, OK

Issue Date:
11/15/22 ISSUED FOR BIDDING

Revisions:

Project Number:
CM083319

Sheet Title:
OVERALL PLAN

Sheet Number:
S2.0

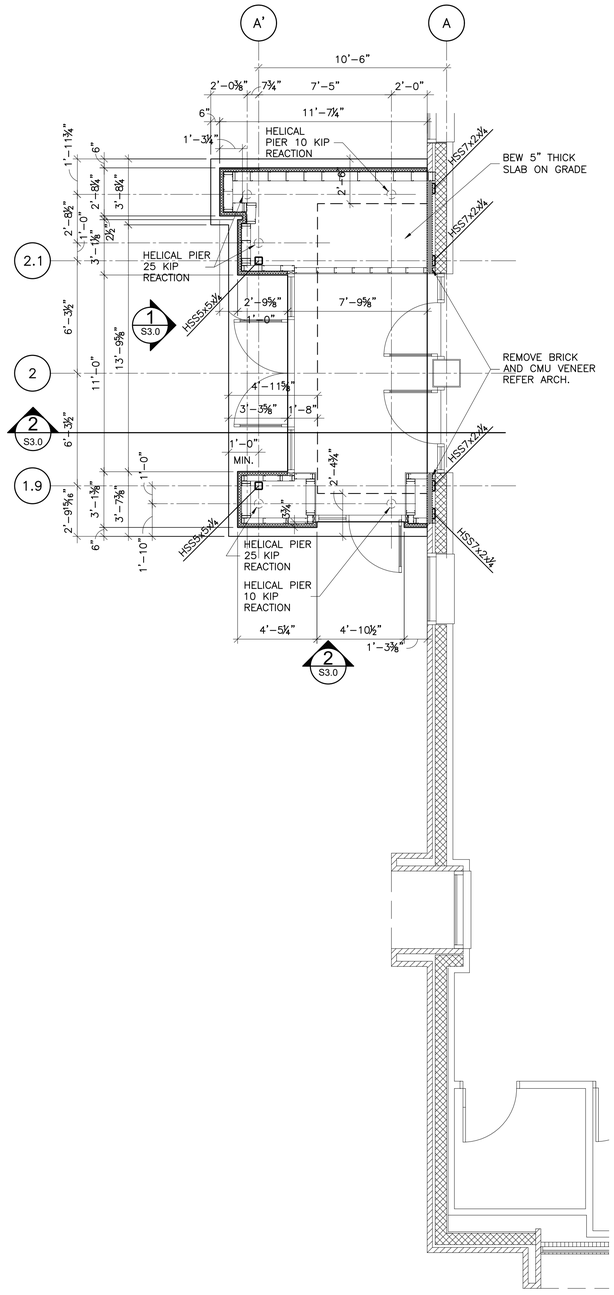

1 S2.1 FOUNDATION PLAN
SCALE: 1/4"=1'-0"

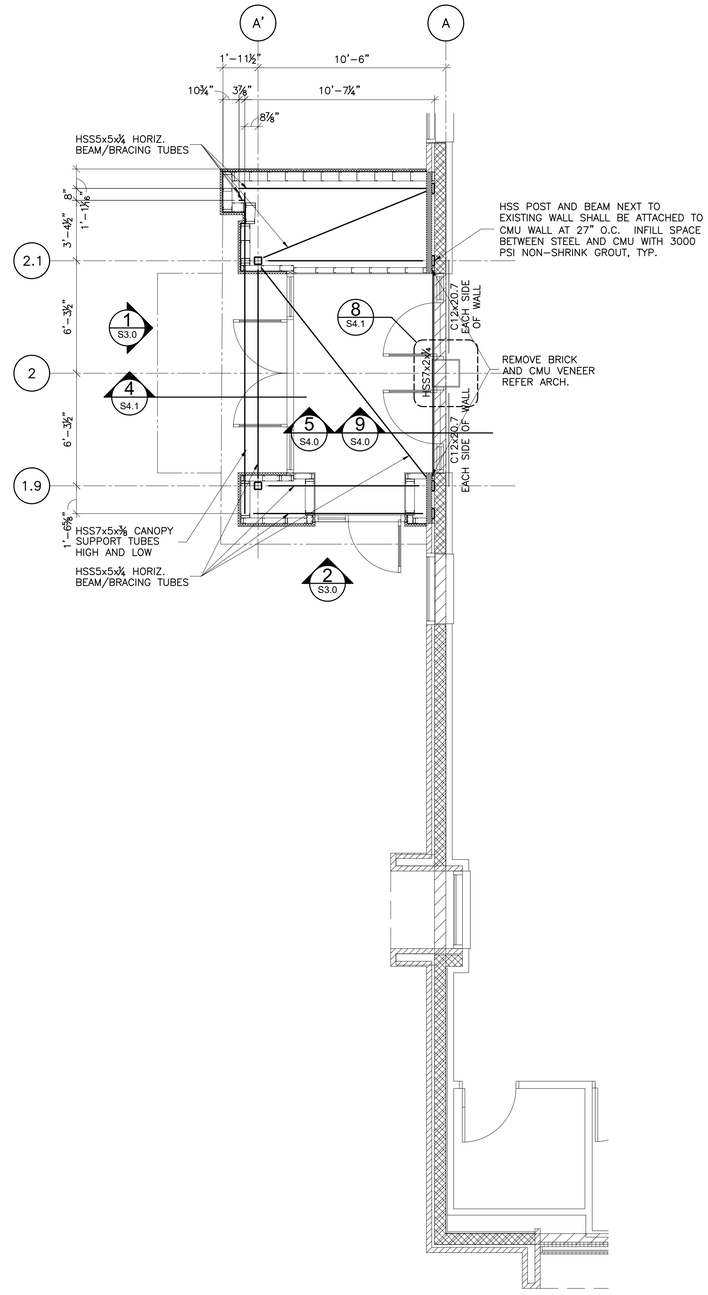

2 S2.1 FRAMING PLAN
SCALE: 1/4"=1'-0"

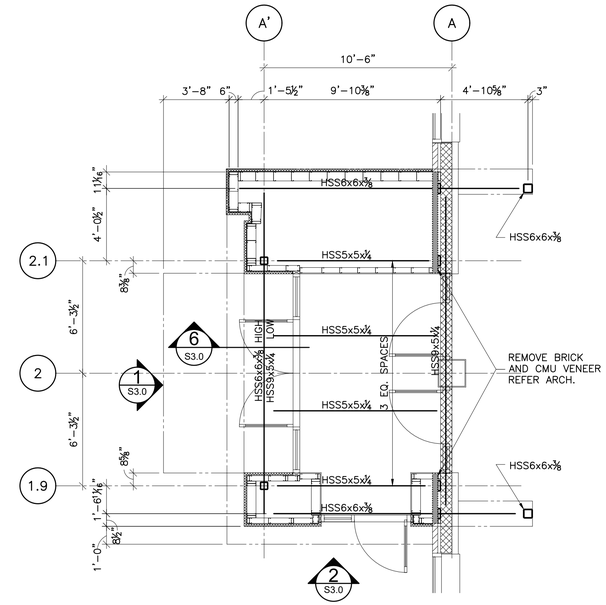

3 S2.1 ROOF FRAMING PLAN
SCALE: 1/4"=1'-0"

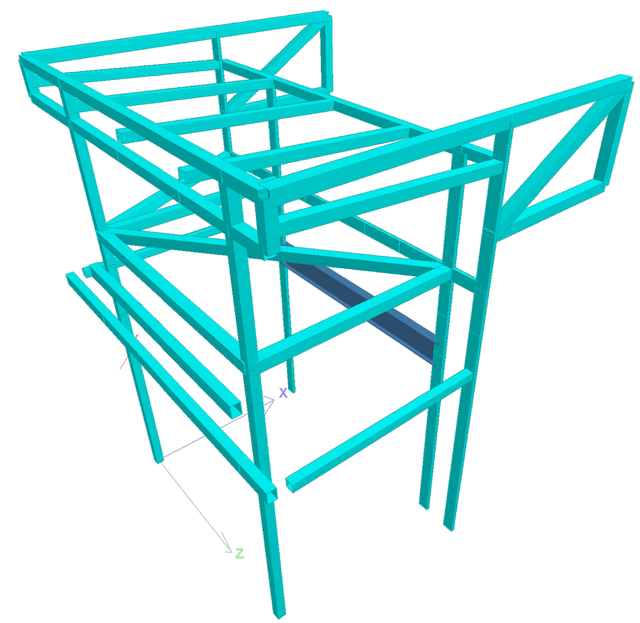

4 S2.1 ISOMETRIC OF STEEL
SCALE: NONE

THE MCKINNEY PARTNERSHIP
architects
3600 West Main
Suite 200
Norman, Oklahoma
73072
405.360.1400 p
405.364.8287 f
tmparch.com

Copyright © 2008 The McKinney Partnership Architects, P.C., All Rights Reserved

Seal:

Project:

City of Norman
Municipal Complex Renovation
Municipal Court
321 N. Webster Avenue
Norman, OK

Issue Date:
11/15/22 ISSUED FOR BIDDING

Revisions:

Project Number:
CM083319

Sheet Title:
FOUNDATION AND FRAMING PLAN

Sheet Number:
S2.1

KFC engineering
Kirkpatrick Forest Curtis PC
Structural Engineering
OK CA #3888, EXP. 06/30/23
525 Central Park Drive, Suite 202
Oklahoma City, OK 73105
405.528.4596 | kfcengr.com

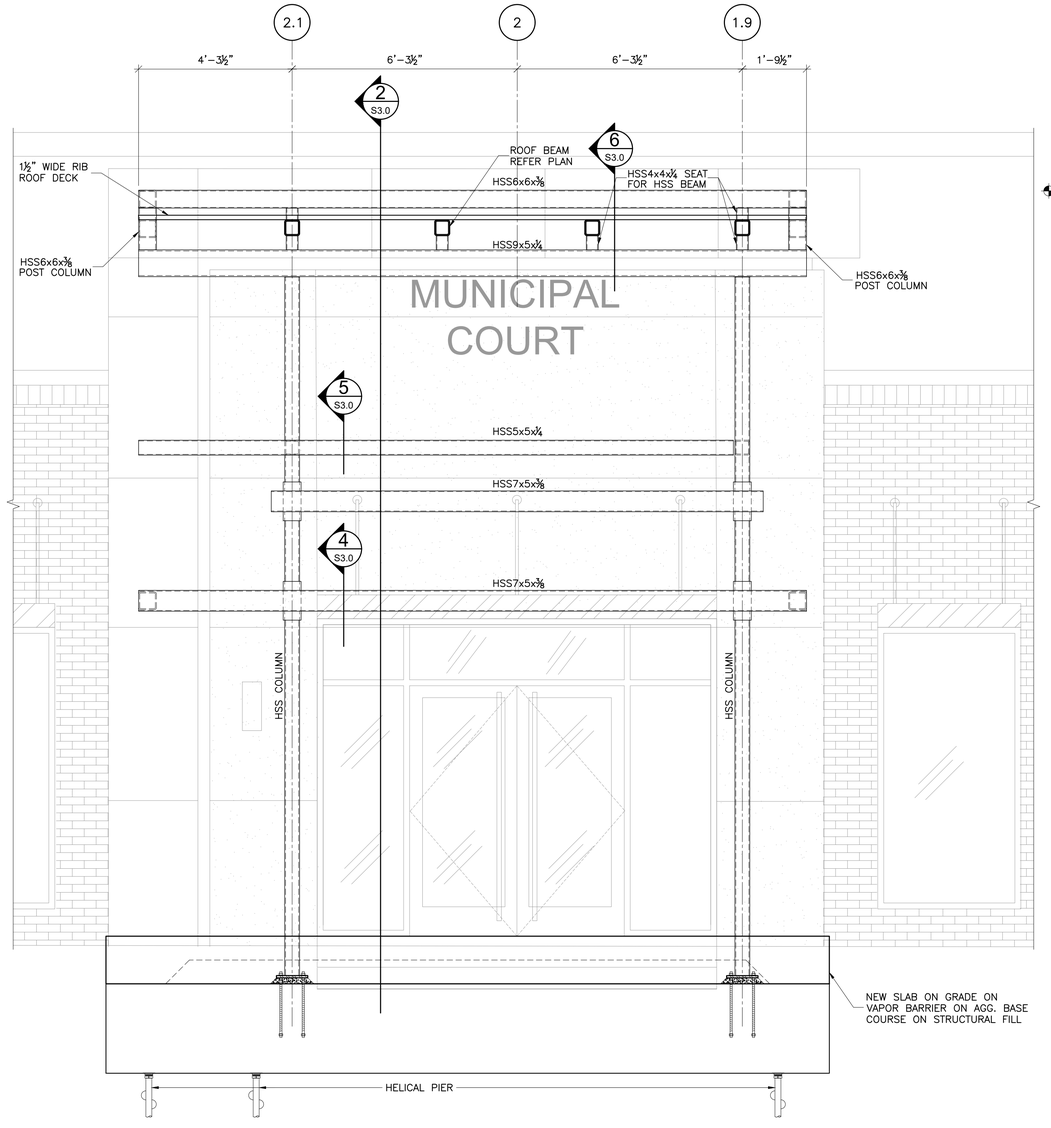

1 S3.0 ELEVATION
SCALE: 1/2"=1'-0"

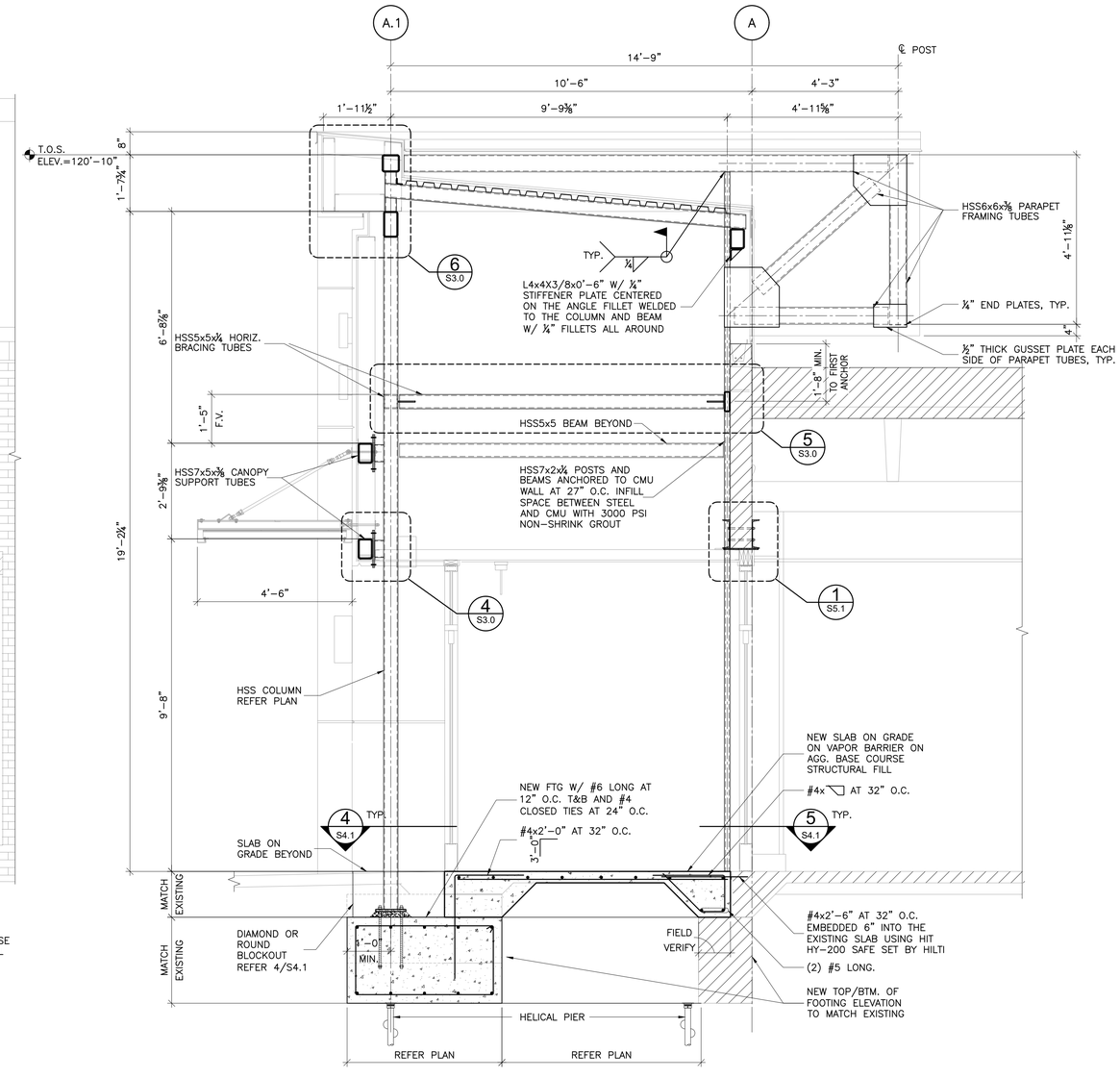

2 S3.0 SECTION
SCALE: 1/2"=1'-0"

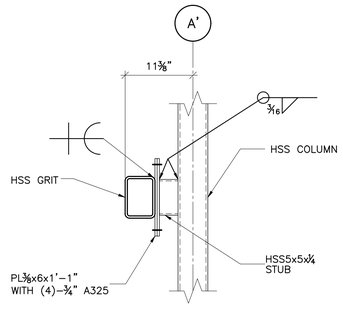

4 S3.0 SECTION
SCALE: 1"=1'-0"

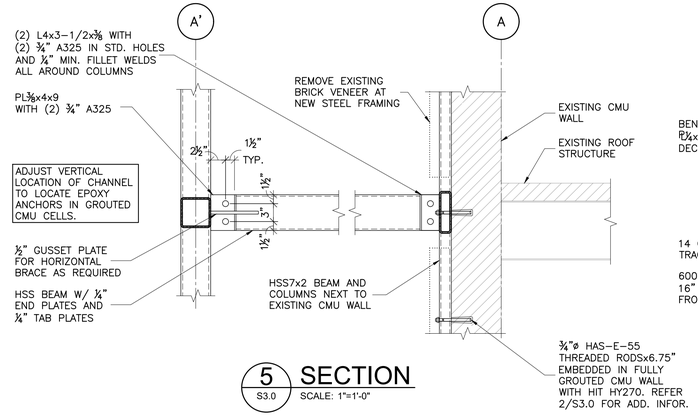

5 S3.0 SECTION
SCALE: 1"=1'-0"

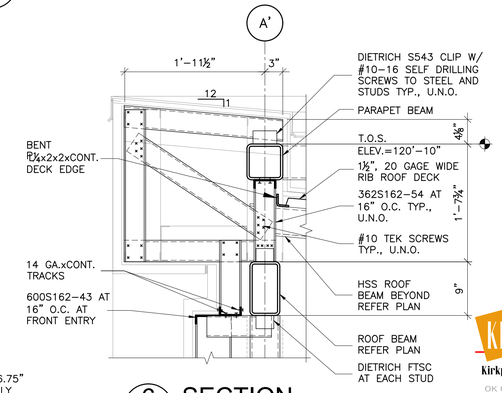

6 S3.0 SECTION
SCALE: 1"=1'-0"

KFC engineering
Kirkpatrick Forest Curtis PC
Structural Engineering
OK CA #3888, EXP. 06/30/23
525 Central Park Drive, Suite 202
Oklahoma City, OK 73105
405.528.4596 | kfcengr.com

THE MCKINNEY PARTNERSHIP
architects
3600 West Main
Suite 200
Norman, Oklahoma
73072
405.360.1400 p
405.364.8287 f
tmparch.com

Copyright © 2008 The McKinney Partnership Architects, P.C., All Rights Reserved

Seal:

PROFESSIONAL STRUCTURAL ENGINEER
KELLI JOHNSTON
25853
OKLAHOMA

Project:

City of Norman
Municipal Complex Renovation
Municipal Court
321 N. Webster Avenue
Norman, OK

Issue Date:
11/15/22 ISSUED FOR BIDDING

Revisions:

Project Number:
CM083319

Sheet Title:
FRAMING ELEVATIONS

Sheet Number:
S3.0

INTERIOR OPENING FRAMING SCHEDULE (MAX. WALL HEIGHT = 12'–6")		
MAX. OPENING WIDTH	JAMB STUD	HEADER
8'–0"	(2) 362S162–33	362T125–33
12'–2"	(2) 362S162–33 + (1) 362T125–33	(2) 362T125–33 + (1) 362S162–33
14'–0"	(2) 362S162–54 + (1) 362T150–54	(2) 362T150–54 + (1) 362S162–54
26'–0"	(2) 362S162–54 (50ksi) + (1) 362T150–54	(2) 1200S250–97 + (2) 1200T125–97 + (1) 600S200–68 + (4) 600T200–26

WHERE OPENING WIDTH EXCEEDS 14'–0", PROVIDE JAMB AND HEADER FOR 8'–0" WIDE OPENING, AND PROVIDE 362S162–33 KICKERS UP TO STRUCTURE AT 48" O.C. ALONG HEADER

1 S4.1 INTERIOR OPENING SCHEDULE
SCALE: NONE

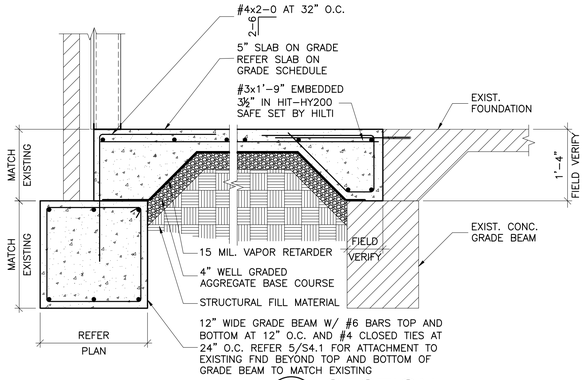

2 S4.1 SECTION
SCALE: 3/4"=1'-0"

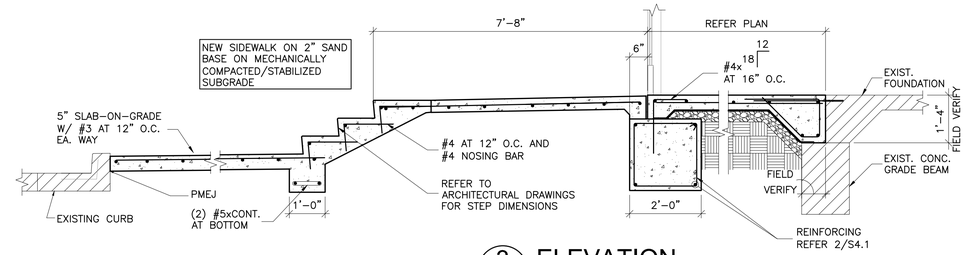

3 S4.1 ELEVATION
SCALE: 1/2"=1'-0"

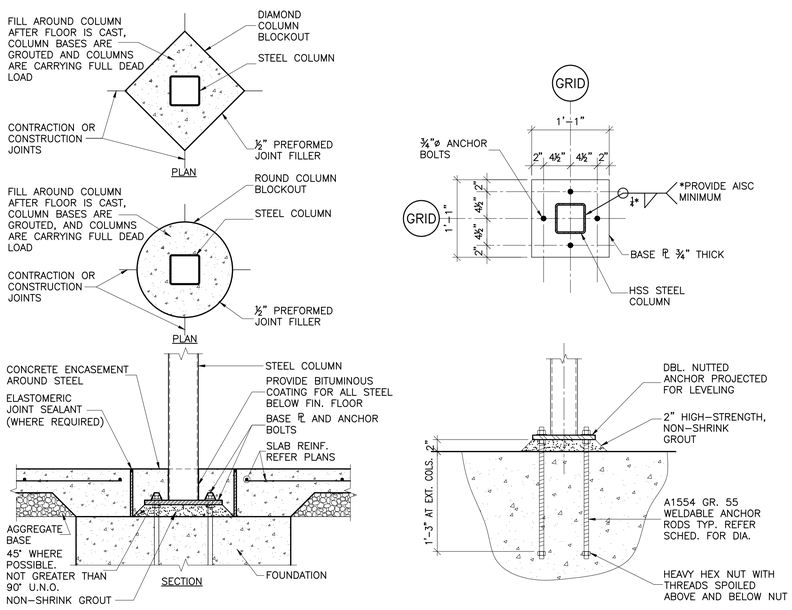

4 S4.1 BASE PLATE INFORMATION
SCALE: 1"=1'-0"

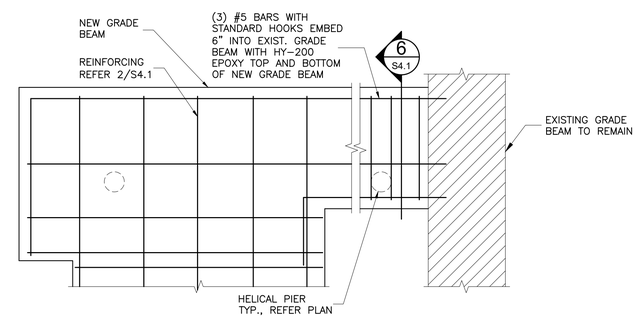

5 S4.1 ENLARGED PLAN
SCALE: 3/4"=1'-0"

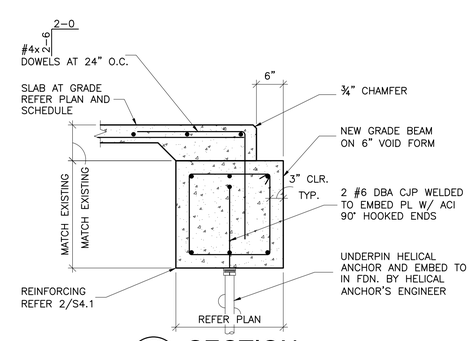

6 S4.1 SECTION
SCALE: 3/4"=1'-0"

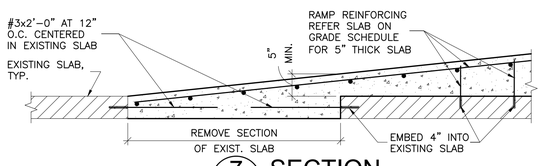

7 S4.1 SECTION
SCALE: 3/4"=1'-0"

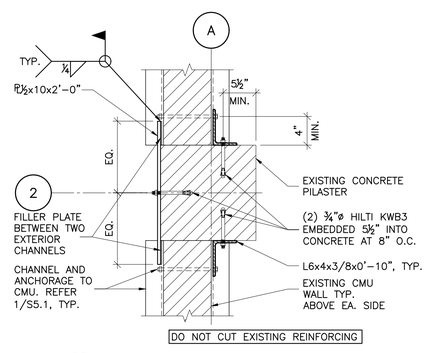

8 S4.1 ENLARGED PLAN
SCALE: 1"=1'-0"

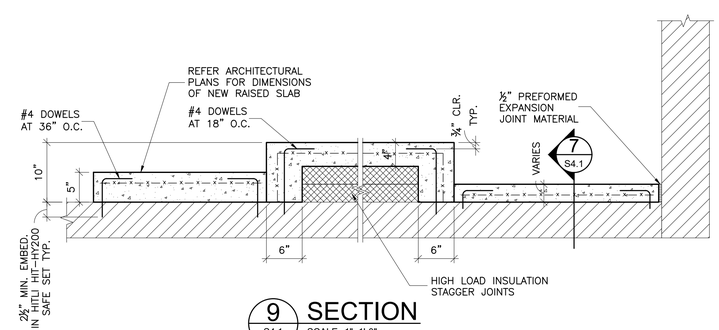

9 S4.1 SECTION
SCALE: 1"=1'-0"

THE MCKINNEY PARTNERSHIP
architects
3600 West Main
Suite 200
Norman, Oklahoma
73072
405.360.1400 p
405.364.8287 f
tmparch.com

Copyright © 2008 The McKinney Partnership Architects, P.C., All Rights Reserved

Seal:

Project:

City of Norman
Municipal Complex Renovation
Municipal Court
321 N. Webster Avenue
Norman, OK

Issue Date:
11/15/22 ISSUED FOR BIDDING

Revisions:

Project Number:
CM083319

Sheet Title:
FOUNDATION DETAILS

Sheet Number:
S4.1

KFC engineering
Kirkpatrick Forest Curtis PC
Structural Engineering
OK CA #3898, EXP. 06/30/23
525 Central Park Drive, Suite 202
Oklahoma City, OK 73105
405.528.4596 | kfcengr.com

SEQUENCING NOTES:
1. REMOVE ALL LIVE LOAD FROM WALL DURING STEEL INSTALLATION AT OPENING.
2. INSTALL CHANNELS THAT EXTEND PAST EACH JAMB OF FUTURE OPENING TO NEAREST VERT. REINF. CELL (MIN.=16").
3. DEMO WALL BELOW PLATE IN 32" WIDE SECTIONS. (MAX.)
4. INSTALL BOTTOM PLATE AS INDICATED.
5. PARGE BETWEEN MASONRY WYTHES W/ 3,000 PSI GROUT ABOVE PLATE.
6. REPEAT STEP 3, 4, AND 5 UNTIL INSTALLATION OF BOTTOM PLATE IS COMPLETE.

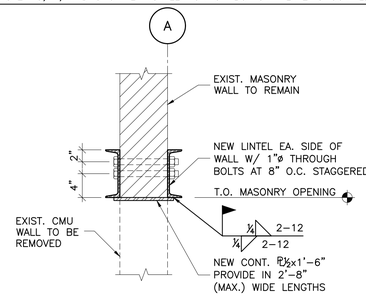

1 SECTION TYP. AT NEW OPENING IN EXISTING MASONRY

S5.1 SCALE: 1"=1'-0"

NOTES:
1) COORDINATE BOTTOM ANGLE BEAM ASSEMBLY AS NECESSARY TO SUPPORT TOILET PARTITION IN PLAN AS WELL AS ELEVATION.
2) COORDINATE BOLT HOLE SIZES AND LOCATIONS W/ FABRICATOR.
3) PROVIDE AN OUT OF PLANE DIAGONAL BRACE L3x3x¼ AT EA. HANGER.

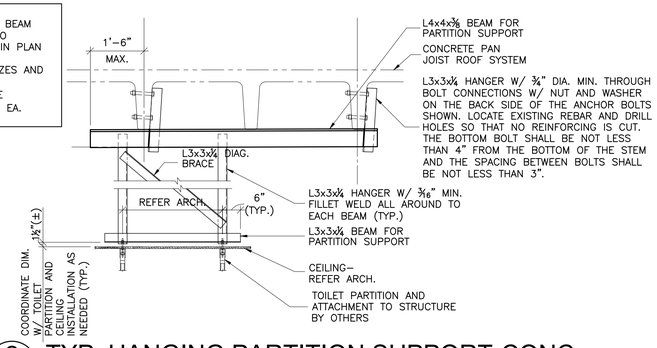

2 TYP. HANGING PARTITION SUPPORT-CONC.

S5.1 SCALE: 1/2"=1'-0"

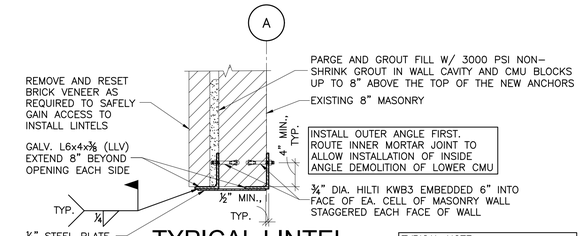

3 TYPICAL LINTEL AT NEW OPENING

S5.1 SCALE: 1"=1'-0"

TYPICAL NOTE:
PAINT ALL STEEL EXPOSED TO AN UNCONTROLLED ENVIRONMENT WITH A ZINC RICH, HIGH PERFORMANCE PAINT AND PRIMER. TOUCH UP ALL WELDS AND SCRATCHES ARE REQUIRED.

NOTE:
REFER 3/S5.1 FOR ADDITIONAL INFORMATION.

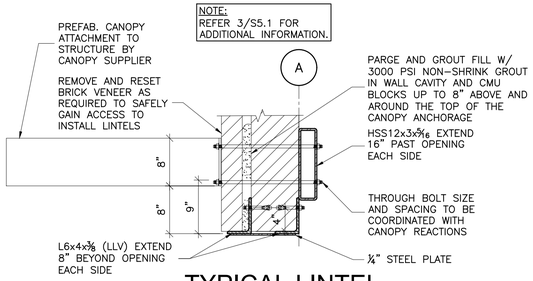

4 TYPICAL LINTEL AT NEW OPENING

S5.1 SCALE: 1"=1'-0"

THE MCKINNEY PARTNERSHIP
architects
3600 West Main
Suite 200
Norman, Oklahoma
73072
405.360.1400 p
405.364.8287 f
tmparch.com

Copyright © 2008 The McKinney Partnership Architects, P.C., All Rights Reserved

Seal:

Project:

City of Norman
Municipal Complex Renovation
Municipal Court
321 N. Webster Avenue
Norman, OK

Issue Date:
11/15/22 ISSUED FOR BIDDING

Revisions:

Project Number:
CM083319

Sheet Title:
FRAMING DETAILS

Sheet Number:
S5.1

KFC engineering
Kirkpatrick Forest Curtis PC
Structural Engineering
OK CA #3888, EXP. 06/30/23
525 Central Park Drive, Suite 202
Oklahoma City, OK 73105
405.528.4596 | kfcengr.com

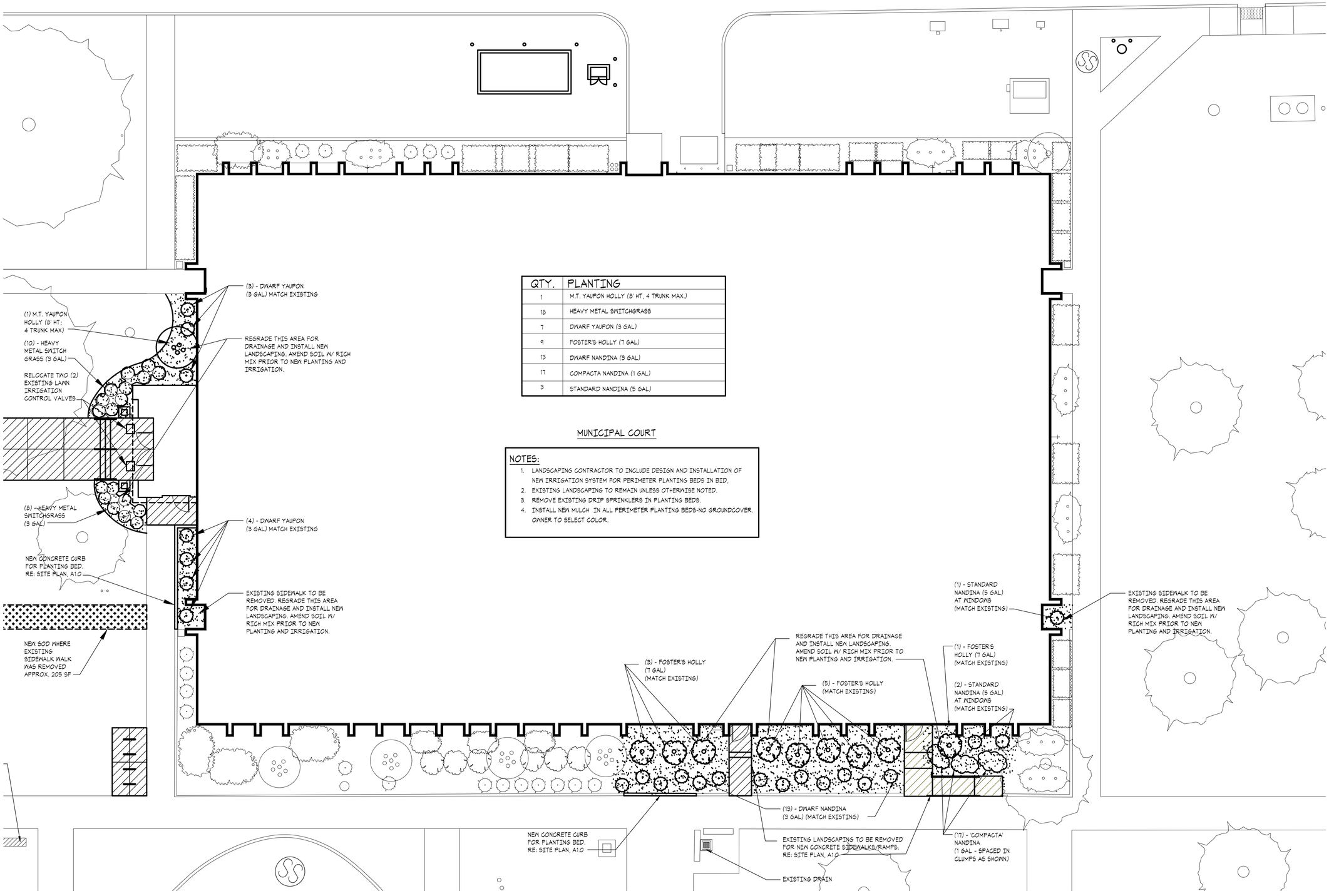

QTY.	PLANTING
1	M.T. YAUPON HOLLY (8' HT, 4 TRUNK MAX.)
18	HEAVY METAL SWITCHGRASS
7	DWARF YAUPON (3 GAL)
9	FOSTER'S HOLLY (7 GAL)
13	DWARF NANDINA (3 GAL)
17	COMPACTA NANDINA (1 GAL)
3	STANDARD NANDINA (5 GAL)

MUNICIPAL COURT

NOTES:

1. LANDSCAPING CONTRACTOR TO INCLUDE DESIGN AND INSTALLATION OF NEW IRRIGATION SYSTEM FOR PERIMETER PLANTING BEDS IN BID.
2. EXISTING LANDSCAPING TO REMAIN UNLESS OTHERWISE NOTED.
3. REMOVE EXISTING DRIP SPRINKLERS IN PLANTING BEDS.
4. INSTALL NEW MULCH IN ALL PERIMETER PLANTING BEDS-NO GROUNDCOVER. OWNER TO SELECT COLOR.

01 LANDSCAPE PLAN
SCALE: 1/8" = 1'-0"

THE MCKINNEY PARTNERSHIP
architects

3600 West Main
Suite 200
Norman, Oklahoma
73072
405.360.1400 p
405.364.8287 f
tmparch.com

Seal:

STATE OF OKLAHOMA
RICHARD STEPHEN McKINNEY JR.
1998
NORMAN, OK
LICENSED ARCHITECT

Project:

City of Norman
Municipal Complex Renovation
Municipal Court
321 N. Webster Avenue
Norman, OK

Issue Date:
11/15/22 ISSUED FOR BIDDING

Revisions:

Project Number:
CM083319

Sheet Title:
LANDSCAPE PLAN

Sheet Number:
L1.0

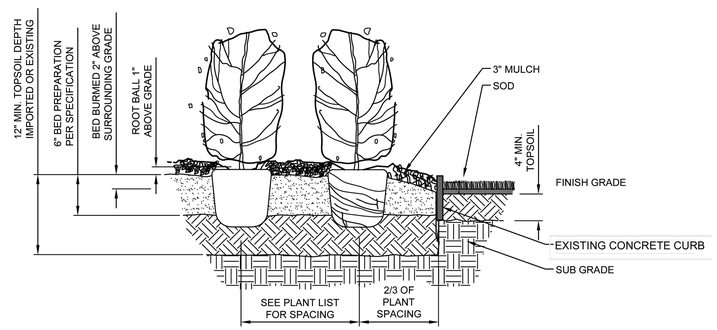

02 PLANTING DETAIL
SCALE: N.T.S.

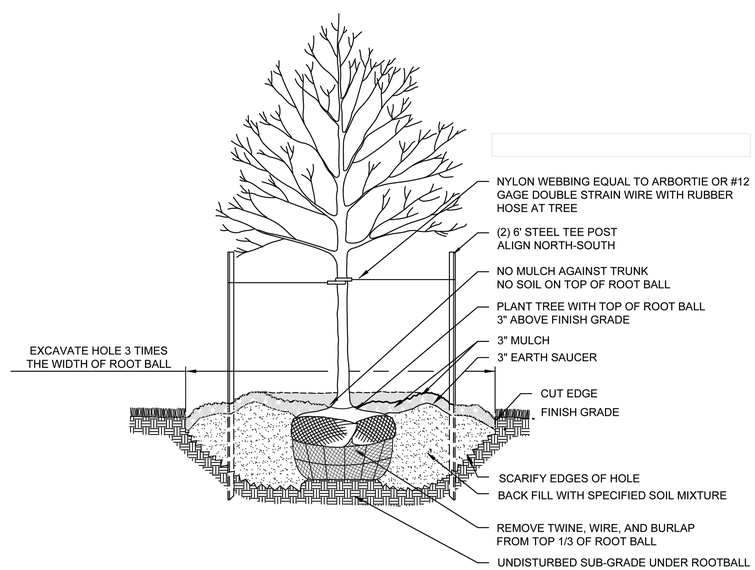

01 TREE PLANTING DETAIL
SCALE: N.T.S.

General Notes

1. ALL PLANTS SHALL BE GUARANTEED TO REMAIN ALIVE AND HEALTHY FOR THE FULL TWELVE MONTH PERIOD AFTER SUBSTANTIAL COMPLETION. REPLACEMENTS SHALL BE GUARANTEED AN ADDITIONAL TWELVE MONTHS. THE CONTRACTOR SHALL REPLACE ANY PLANTS WHICH ARE DEAD OR ARE IN AN UNHEALTHY OR UNSIGHTLY CONDITION. THE COST OF SUCH REPLACEMENTS SHALL BE BORNE BY THE CONTRACTOR.
2. CONTRACTOR TO MAINTAIN LANDSCAPING MATERIALS AND SOD FOR A PERIOD OF NOT LESS THAN 30 DAYS AFTER ACCEPTANCE OF PROJECT BY OWNERS REPRESENTATIVE.
3. THE CONTRACTOR SHALL BE RESPONSIBLE FOR THE VERIFICATION OF ALL UNDERGROUND UTILITY LINES (TELEPHONE, GAS, WATER, ELECTRIC, CABLE TV, ETC.) PRIOR TO THE START OF ANY WORK.
4. THE CONTRACTOR IS RESPONSIBLE FOR CALCULATING ALL QUANTITIES OF MATERIALS FROM THE PLANTING PLAN. WHEN DISCREPANCIES OCCUR BETWEEN THE PLAN AND THE MATERIALS LIST,THE PLANTING PLAN SUPERSEDES THE MATERIALS LIST IN ALL CASES.

Planting Notes

1. ALL PLANT MATERIALS TO BE IN ACCORDANCE WITH AMERICAN STANDARD FOR NURSERY STOCK ANSI Z60.1 - CURRENT EDITION.
2. PLANTING SHALL BE LOCATED WHERE IT IS SHOWN ON THE PLAN EXCEPT WHERE OVERHEAD OR BELOW GROUND OBSTRUCTIONS ARE ENCOUNTERED. SHOULD OBSTRUCTIONS BE FOUND, THE CONTRACTOR SHALL PROMPTLY NOTIFY THE LANDSCAPE ARCHITECT WHO WILL RELOCATE THE PLANT MATERIAL.
3. ALL PLANTING BEDS SHALL BE PREPARED IN THE FOLLOWING MANNER: REMOVE ALL WEEDS AND GRASSES FROM PLANTING BEDS PRIOR TO BEGINNING SOIL PREPARATION. IF BERMUDA GRASS IS PRESENT IT SHALL BE ERADICATED BY APPROVED MEANS. SPREAD 2" OF COMPOST (BACK TO EARTH SOIL CONDITIONER), 1" OF PINE BARK MULCH, AND OSMOCOTE FERTILIZER (1 LB. PER 100 SQ. FT.) INCORPORATE TO A DEPTH OF 6".
4. ALL PLANTING BEDS AND TREE WELLS SHALL RECEIVE A MINIMUM OF 3" OF CEDAR MULCH. COLOR BY OW
5. ALL TREES SHALL BE PLANTED 2" ABOVE FINISH GRADE.
6. TWINE AND BURLAP SHALL BE CUT AND REMOVED FROM THE UPPER 1/3 OF THE ROOT BALL ON ALL TREES AND SHRUBS.
7. FINISH GRADES OF ALL PLANTING BEDS SHALL PROVIDE POSITIVE DRAINAGE OUT OF PLANTED AREA.
8. AREAS WITHIN THE PROPERTY LINES, THE R.O.W. PARALLEL TO THE PROPERTY LINES, AND ALL OTHER LAWN AREAS DISTURBED BY THE CONSTRUCTION PROCESS THAT ARE NOT DESIGNATED TO RECEIVE OTHER PLANTING, PAVING OR BUILDINGS ARE TO BE SODDED WITH SOLID SOD BERMUDA GRASS.
9. ALL AREAS RECEIVING SOD SHALL RECEIVE A MINIMUM 4" OF TOPSOIL. SOD SHALL BE STRONGLY ROOTED, FREE OF WEEDS AND UNDESIRABLE NATIVE GRASSES, AND SHALL BE NOT LESS THAN 2 YEARS OLD. APPLY A 10-20-10 FERTILIZER AT A RATE OF TEN(10) POUNDS PER 1,000 SQUARE FEET TO ALL LAWN AREAS PRIOR TO SODDING.
10. NOT USED
11. BACK FILL ALL TREE PITS WITH A SOIL MIXTURE CONSISTING OF 1 PART TOP SOIL AND 1 PART COMPOST AND 1/2 POUND OSMOCOTE FERTILIZER PER TREE.
12. ALL PLANTS SHALL BE TRUE OF SPECIES AND VARIETY AND SHALL CONFORM TO MEASUREMENTS (CALIPER, SIZE, AND TRUNK HEIGHT) AS SPECIFIED ON THE DRAWING.
13. SIX WEEKS AFTER THE INSTALLATION OF SOD, A GRANULAR APPLICATION OF BARRICADE PRE-EMERGENT WEED CONTROL SHALL BE APPLIED AT A RATE OF 10 POUNDS PER 1,000 S.F. AND THEREAFTER, ANNUAL APPLICATIONS SHALL BE APPLIED DURING THE SECOND WEEK OF FEBRUARY.
14. SIX WEEKS AFTER THE INSTALLATION OF THE LANDSCAPE MATERIALS, THE FIRST OF TWO ANNUAL LIQUID APPLICATIONS OF PENDULUM PRE-EMERGENT WEED CONTROL SHALL BE APPLIED TO THE MULCH SURFACE IN ALL SHRUB AND GROUND COVER AREAS.
15. STAKING AND GUYING TO BE REMOVED BY THE LANDSCAPE CONTRACTOR NINE MONTHS AFTER PLANTING.

THE MCKINNEY PARTNERSHIP
architects
3600 West Main
Suite 200
Norman, Oklahoma
73072
405.360.1400 p
405.364.8287 f
tmparch.com

Seal:

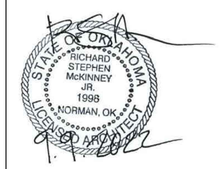

Project:

City of Norman
Municipal Complex Renovation
Municipal Court
321 N. Webster Avenue
Norman, OK

Issue Date:
11/15/22 ISSUED FOR BIDDING

Revisions:

Project Number:
CM083319

Sheet Title:
LANDSCAPE DETAILS

Sheet Number:
L1.1

CODE REVIEW

LOCAL MUNICIPALITY:	CITY OF NORMAN OKLAHOMA
APPLICABLE BUILDING CODE:	2015 INTERNATIONAL EXISTING BUILDING CODE (IEBC) INCLUDING STATE AND LOCAL AMENDMENTS
	2015 INTERNATIONAL BUILDING CODE (IBC) INCLUDING STATE AND LOCAL AMENDMENTS
MECHANICAL CODE:	2015 INTERNATIONAL MECHANICAL CODE (IMC) INCLUDING STATE AND LOCAL AMENDMENTS
PLUMBING CODE:	2015 INTERNATIONAL PLUMBING CODE (IPC) INCLUDING STATE AND LOCAL AMENDMENTS
ELECTRICAL CODE:	2014 NATIONAL ELECTRICAL CODE (NEC) NFPA 70 INCLUDING STATE AND LOCAL AMENDMENTS
FIRE CODE:	2015 INTERNATIONAL FIRE CODE (IFC) INCLUDING STATE AND LOCAL AMENDMENTS
ACCESSIBILITY CODE:	ICC A117.1 - 2009
CONSTRUCTION TYPE:	TYPE IIB NON-COMBUSTIBLE - FULLY SPRINKLED
OCCUPANCY TYPE:	A-3 (COURTROOM)
SPRINKLER SYSTEM:	AUTOMATIC SPRINKLER SYSTEM
FIRE ALARM: PER 907.2	FIRE ALARM SYSTEM WITH MANUAL PULL STATIONS
ALLOWABLE AREA: PER 506.2	A-3: 38,000 S.F.
EXISTING AREA:	14,550 GSF
IEBC COMPLIANCE METHOD: PER CHAPTER 4	PRESCRIPTIVE METHOD
FIRE RESISTANCE:	PRIMARY STRUCTURAL FRAME — 0 HR. PER TABLE 601
	EXTERIOR WALLS LOADBEARING — 0 HR. PER TABLE 601
	INTERIOR WALLS LOADBEARING — 0 HR. PER TABLE 601
	INTERIOR WALLS AND PARTITIONS NON-LOADBEARING — 0 HR. PER TABLE 601
	ROOF CONSTRUCTION AND ASSOCIATED SECONDARY MEMBERS — 0 HR. PER TABLE 601
	CORRIDORS (MAX. DEAD END LENGTH = 20'-A, 50'-B PER 1020.4) — 0 HR. PER TABLE 1020.1
	CORRIDORS (MAX. DEAD END LENGTH = 20'-A, 50'-B PER 1020.4) — 0 HR. PER TABLE 1020.1

MEANS OF EGRESS SIZING: PER 1005.3.2	COMPONENTS OTHER THAN STAIRWAYS - 0.2 INCHES PER OCCUPANT	
MINIMUM NUMBER OF EXITS: PER 1006.3.1	1-500 OCCUPANTS = 2 EXITS, 3 EXITS PROVIDED	
EXIT SEPARATION: PER 1007.1.1	FULLY SPRINKLERED: 1/3 DIAGONAL OF AREA SERVED	
	EXITS PROVIDED ARE SPACED APART GREATER THAN 1/3 DIAGONAL OF AREA SERVED	
EXIT ACCESS TRAVEL DISTANCE: 1017.2, 1017.3	FULLY SPRINKLERED: A = 250' MAX. FROM MOST REMOTE POINT UNOBSTRUCTED TO AN EXIT	
	EXIT ACCESS TRAVEL IS LESS THAN 250'	
OCCUPANT LOAD: (REFER TO BREAKDOWN BY AREAS ON LSF1.0)	TOTAL OCCUPANT LOAD = 500 OCCUPANTS	
TRAVEL DISTANCE TO: RESTROOMS: 2902.3.2	LESS THAN 500'-0"	
PLUMBING FIXTURES REQ'D: PER TABLE 2902.1 ASSEMBLY A-3	WATER CLOSETS: (244) MEN 1/125	2 MENS REQ'D / 6 PROVIDED
	(245) WOMEN 1/65	4 WOMENS REQ'D / 6 PROVIDED
	LAVATORIES: (244) MEN 1/200	2 MENS REQ'D / 4 PROVIDED
	(245) WOMEN 1/200	2 MENS REQ'D / 5 PROVIDED
		+ ONE UNISEX HOLDING RESTROOM PROVIDED
	DRINKING FOUNTAINS: (488) 1 PER 500	1 REQ'D / 1 BILEVEL UNIT PROVIDED
	SERVICE SINK:	1 REQ'D / 1 PROVIDED

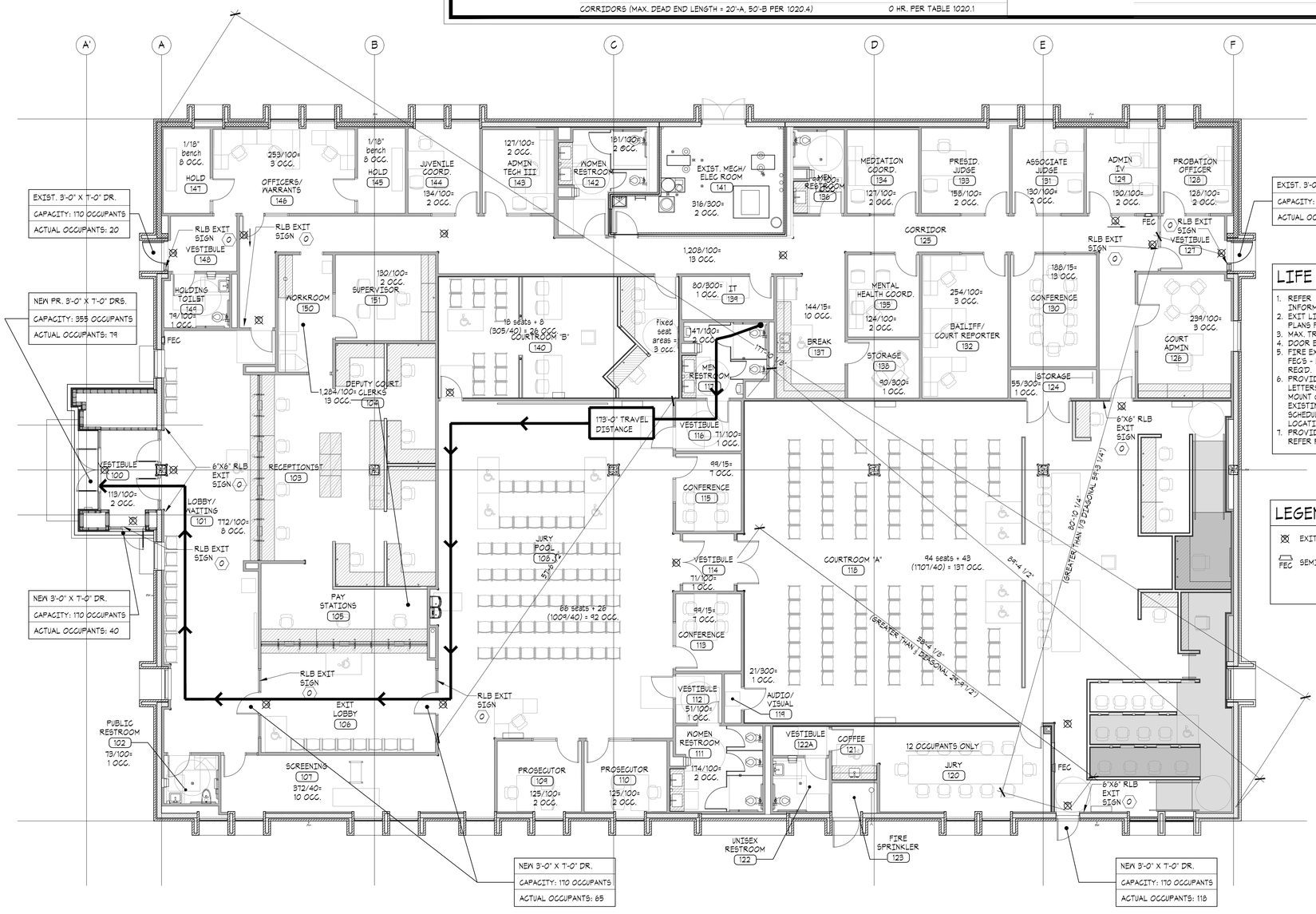

LIFE SAFETY PLAN GENERAL NOTES:

1. REFER TO CODE REVIEW ON SHEET LSF1.0 FOR DETAILED INFORMATION.
2. EXIT LIGHTS ARE SHOWN FOR REFERENCE ONLY. REFER TO ELECTRICAL PLANS FOR DETAILED LOCATIONS.
3. MAX. TRAVEL DISTANCE = 250' (A-3) NOT EXCEEDED PER IBC 1017.2.
4. DOOR EGRESS WIDTH SHOWN AT 0.20" PER OCCUPANT PER IBC 1005.3.2.
5. FIRE EXTINGUISHERS TO BE RE-USED FROM EXISTING FECS FOR NEW FECS - LARSENS AL2404-R3 OR EQ.. INSPECT AND MAINTAIN FES AS REQ'D.
6. PROVIDE NEW 2"X8" RAISED LETTER BRAILLE EXIT SIGNS WITH WHITE LETTERS ON BLACK BACKGROUND AT ALL EXIT DOORS, TYPICAL U.N.O. MOUNT ON THE EXISTING ALUMINUM MULLION ADJACENT TO THE EXISTING DOUBLE DOORS. INSTALL AND MOUNT PER ACCESSORIES SCHEDULE AND MOUNTING HEIGHTS ON SHEET A0.2. REFER PLAN FOR LOCATIONS.
7. PROVIDE 6" X 6" RAISED LETTER BRAILLE EXIT SIGNS AT ALL EXITS. REFER PLAN FOR LOCATIONS.

LEGEND:

- EXIT SIGN
- FEC SEMI-RECESSED FIRE EXTINGUISHER CABINET

01 LIFE SAFETY PLAN
SCALE: 1/8" = 1'-0"

THE MCKINNEY PARTNERSHIP
architects

3600 West Main
Suite 200
Norman, Oklahoma
73072
405.360.1400 p
405.364.8287 f
tmparch.com

Seal:

STATE OF OKLAHOMA
RICHARD STEPHEN McKINNEY JR.
1998
NORMAN, OK
LICENSED ARCHITECT

Project:

City of Norman
Municipal Complex Renovation
Municipal Court
321 N. Webster Avenue
Norman, OK

Issue Date:
11/15/22 ISSUED FOR BIDDING

Revisions:

Project Number:
CM083319

Sheet Title:
LIFE SAFETY PLAN
CODE REVIEW

Sheet Number:
LSF1.0

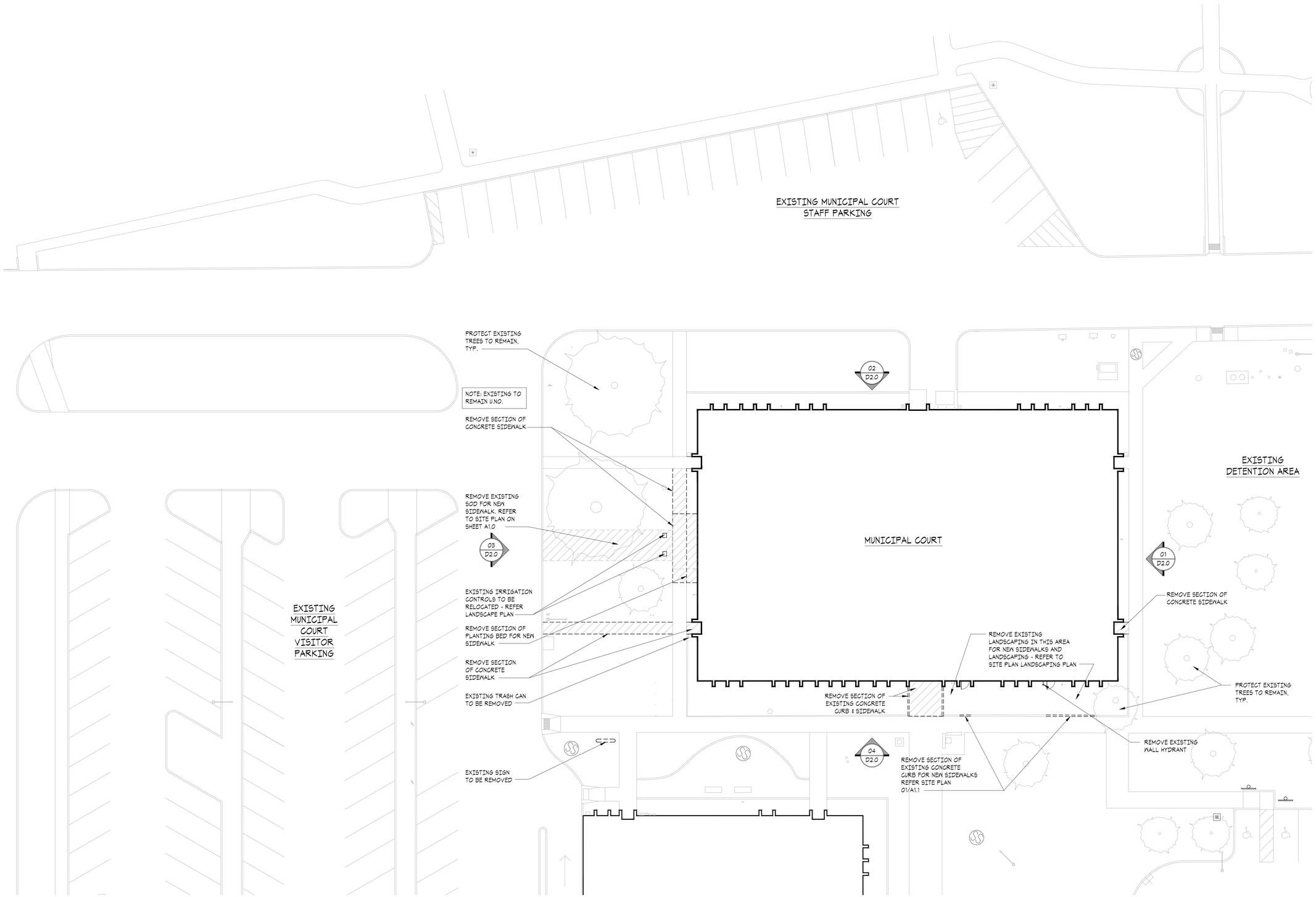

01 DEMOLITION SITE PLAN
SCALE: 1/8" = 1'-0"

THE MCKINNEY PARTNERSHIP
architects

3600 West Main
Suite 200
Norman, Oklahoma
73072
405.360.1400 p
405.364.8287 f
tmparch.com

Seal:

STATE OF OKLAHOMA
RICHARD STEPHEN McKINNEY JR.
1998
NORMAN, OK
LICENSED ARCHITECT

Project:

City of Norman
Municipal Complex Renovation
Municipal Court
321 N. Webster Avenue
Norman, OK

Issue Date:
11/15/22 ISSUED FOR BIDDING

Revisions:

Project Number:
CM083319

Sheet Title:
DEMOLITION SITE PLAN

Sheet Number:
D1.0

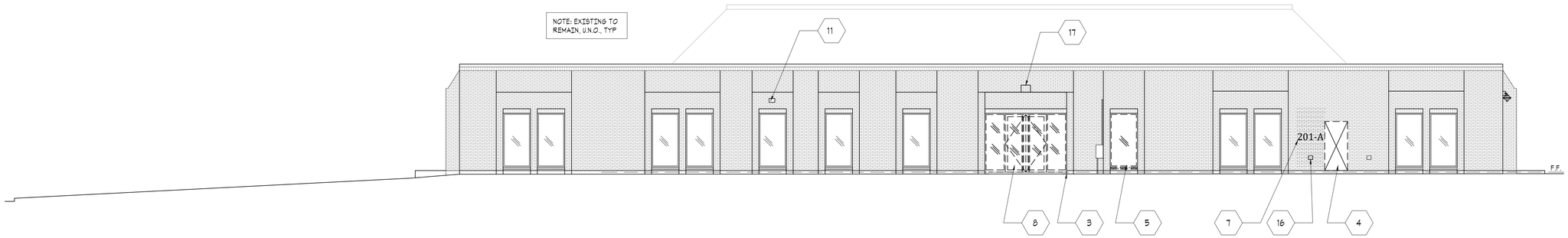

04 SOUTH DEMOLITION ELEVATION
SCALE: 1/8" = 1'-0"

DEMOLITION KEY NOTES:

1. REMOVE PORTION OF EXISTING NON-LOADBEARING MASONRY WALL FOR NEW 4'-0"W X 8'-4"H ALUMINUM WINDOWS-REFER STRUCTURAL FOR BRACING/SHORING OF EXISTING MASONRY. ALIGN WITH NEAREST VERTAGAL BRICK JOINT. SAVE BRICK FOR REUSE.
2. REMOVE EXISTING HM DOOR, HM FRAME & SIDELITE. SAVE ACCESS CONTROL HARDWARE FOR REUSE-REFER TECHNOLOGY DEMO PLAN. PROTECT EXISTING SOLIDER BRICK COURSE TO REMAIN.
3. REMOVE EXISTING SECTION OF CONCRETE SIDEWALK.
4. REMOVE PORTION OF EXISTING MASONRY WALL FOR NEW 3'-0" X 7'-0" HM DOOR-REFER STRUCTURAL FOR BRACING/ SHORING OF EXISTING MASONRY. SAVE BRICK FOR REUSE.
5. REMOVE EXISTING ALUMINUM WINDOW AND MASONRY SILL FOR NEW HM DOOR. SAVE BRICK FOR REUSE.
6. NOT USED
7. REMOVE EXISTING ADDRESS SIGNAGE.
8. REMOVE EXISTING ALUMINUM/GLASS ENTRY DOORS, FRAME AND HARDWARE.
9. REMOVE EXISTING OPENINGS IN EXISTING CMU WALLS FOR NEW ENTRY ELEMENT-REFER STRUCTURAL.
10. NOT USED
11. REMOVE EXISTING LIGHT FIXTURE, J-BOX & WIRING BACK TO PANEL.
12. NOT USED
13. REMOVE EXISTING NON-LOADBEARING BRICK VENEER FOR NEW ENTRY ELEMENT-REFER STRUCTURAL. SAVE BRICK FOR REUSE.
14. REMOVE PORTION OF EXISTING PREFINISHED METAL COPING AND WOOD BLOCKING FOR NEW ENTRY STRUCTURE.
15. NOT USED
16. REMOVE EXISTING WALL HYDRANT
17. REMOVE EXTERIOR WALL PACK AND SAVE FOR REUSE

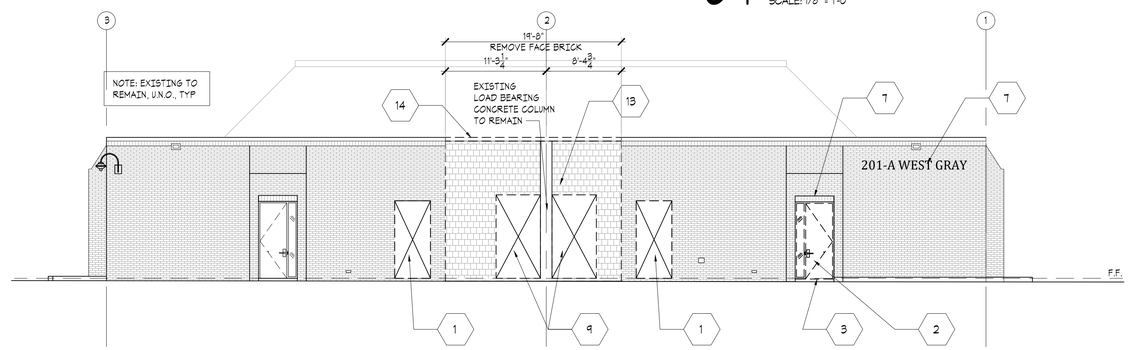

03 WEST DEMOLITION ELEVATION
SCALE: 1/8" = 1'-0"

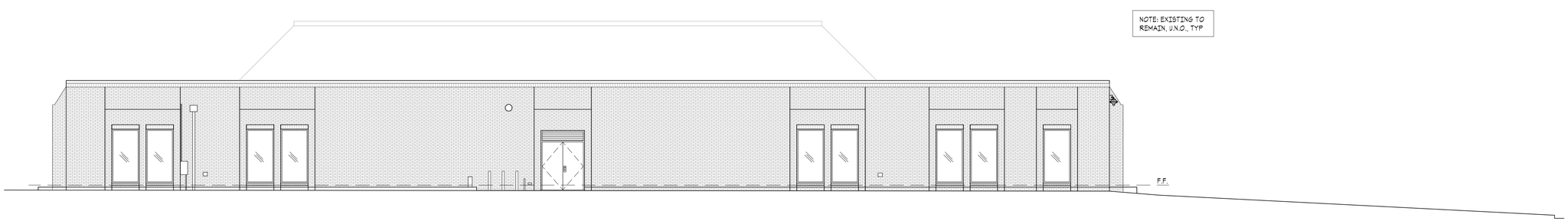

02 NORTH DEMOLITION ELEVATION
SCALE: 1/8" = 1'-0"

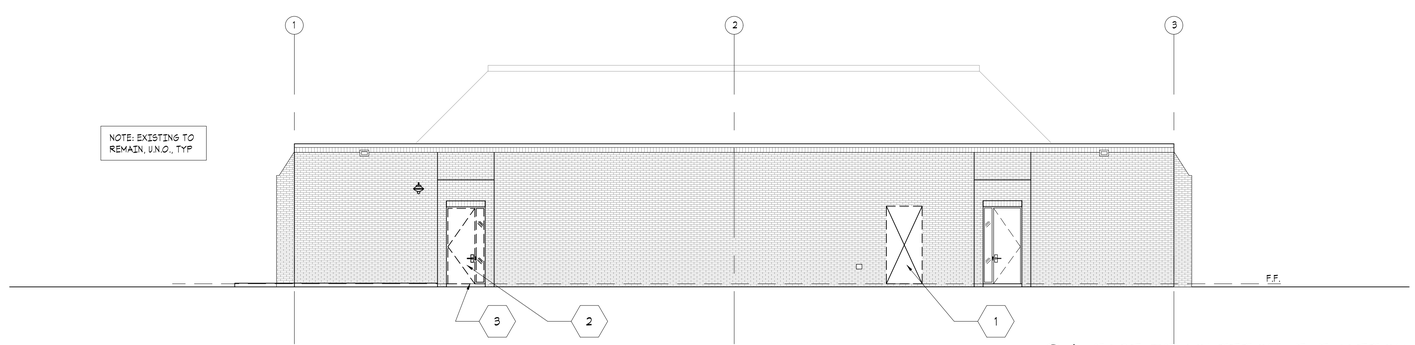

01 EAST DEMOLITION ELEVATION
SCALE: 1/8" = 1'-0"

THE MCKINNEY PARTNERSHIP
architects
3600 West Main
Suite 200
Norman, Oklahoma
73072
405.360.1400 p
405.364.8287 f
tmparch.com

Copyright © 2008 The McKinney Partnership Architects, P.C., All Rights Reserved

Seal:

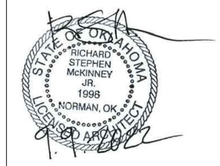

Project:

City of Norman
Municipal Complex Renovation
Municipal Court
321 N. Webster Avenue
Norman, OK

Issue Date:
11/15/22 ISSUED FOR BIDDING

Revisions:

Project Number:
CM083319

Sheet Title:
DEMOLITION ELEVATIONS

Sheet Number:
D2.0

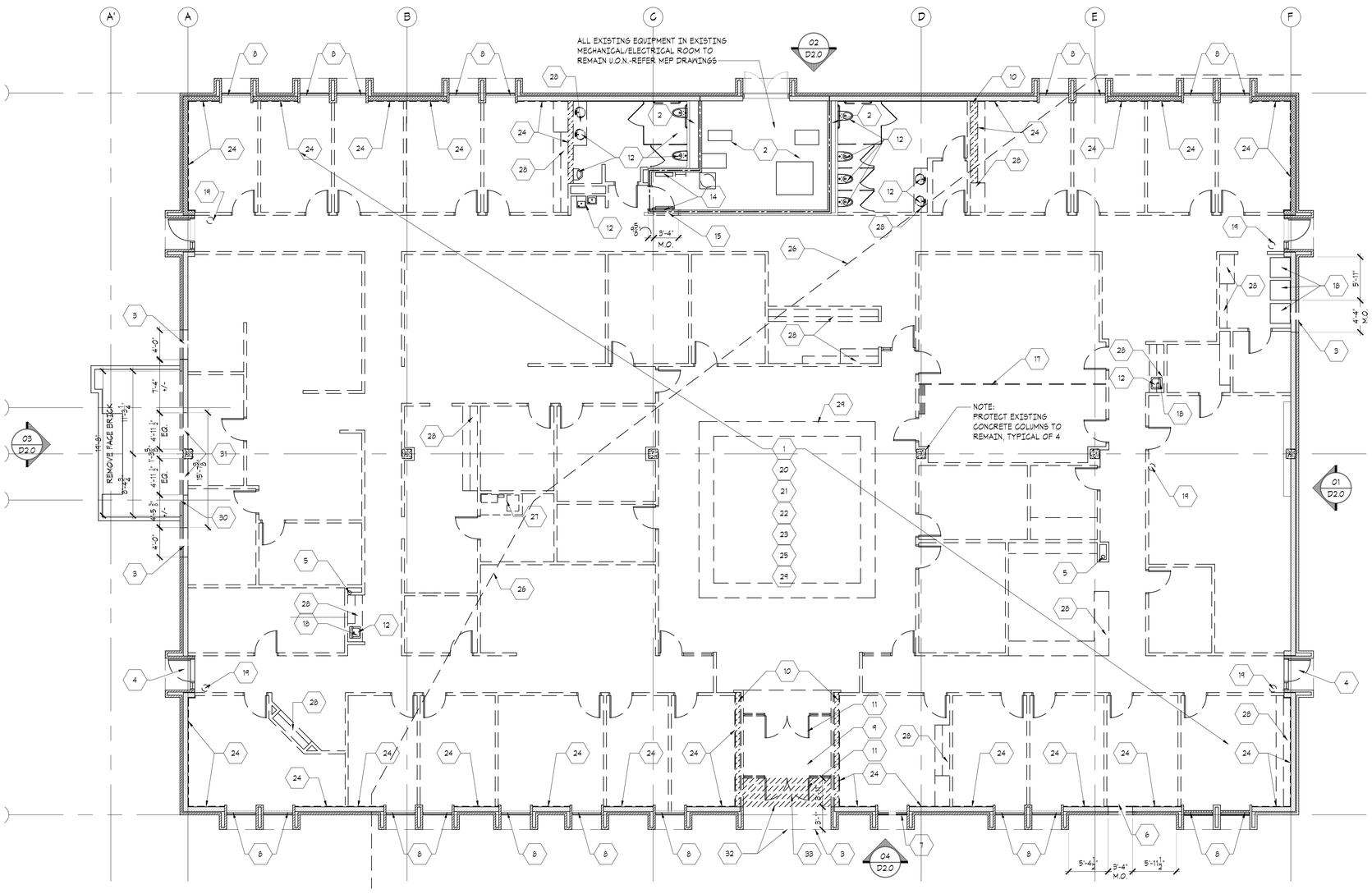

01 DEMOLITION FLOOR PLAN

SCALE: 1/8" = 1'-0"

DEMOLITION KEY NOTES:

1. REMOVE ALL INTERIOR EXISTING PARTITIONS, FLOORING, CEILINGS, INTERIOR DOORS, INTERIOR FRAMES, MILLWORK, WINDOW BLINDS, U.O.N.
2. EXISTING MECH. ROOM & PLUMBING CHASES TO REMAIN UNLESS OTHERWISE NOTED.
3. REMOVE PORTION OF EXISTING NON-LOADBEARING FACE BRICK AND CMU WALL FOR NEW ALUMINUM WINDOW-REFER STRUCTURAL.
4. REMOVE EXISTING HM DOOR, HM FRAME & SIDELIGHT. SAVE ACCESS CONTROL HARDWARE FOR REUSE-REFER TECHNOLOGY PLANS.
5. RELOCATE EXISTING 6" DIA. ROOF DRAIN. RISER TO REMAIN.
6. REMOVE EXISTING MASONRY WALL FOR NEW 3'-6" X 7'-0" HM DOOR-REFER STRUCTURAL.
7. REMOVE EXISTING ALUMINUM WINDOW, ALUM. BLIND, AND MASONRY SILL FOR NEW HM DOOR.
8. REMOVED EXISTING ALUM. MINI BLINDS AND MOUNTING BRACKETS.
9. REMOVE EXISTING ENTRY VESTIBULE AND BRICK PAVERS.
10. REMOVE, ASSUMED, NON-LOAD BEARING EXISTING MASONRY WALLS-REFER STRUCTURAL.
11. REMOVE EXISTING ALUM/GLASS ENTRY DOORS.
12. REMOVE EXISTING PLUMBING FIXTURE-REFER PLUMBING.
13. REMOVE EXISTING EXTERIOR WALL PACK AND SAVE FOR REUSE.
14. REMOVE EXISTING ABANDONED PHONE EQUIPMENT-REQUIRES PREGON MEETING WITH CITY IT STAFF PRIOR TO DEMO OF ANY EQUIPMENT.
15. REMOVE PORTION OF EXISTING CMU WALL FOR NEW 3'-0" X 7'-0" HM DOOR-REFER STRUCTURAL FOR BRACING / SHORING.
16. NOT USED
17. REMOVE EXISTING FOLDING PARTITION & STRUCTURE ABOVE CEILING.
18. REMOVE EXISTING BREAKROOM ICE, REF AND VENDING AND RETURN TO OWNER.
19. REMOVE EXISTING FIRE EXTINGUISHER AND RETURN TO OWNER.
20. REMOVE ALL EXISTING INTERIOR POWER & DATA OUTLETS, CONDUIT AND WIRING BACK TO EXISTING PANEL. REFER: ELECTRICAL.
21. REMOVE ALL EXISTING INTERIOR LIGHT FIXTURES, CONDUIT AND WIRING BACK TO EXISTING PANEL. REFER: ELECTRICAL
22. REMOVE ALL EXISTING METAL SHELVING, FURNITURE, EQUIP., ETC. ABANDONED BY OWNER.
23. REMOVE ALL EXISTING INTERIOR DUCTWORK, THERMOSTATS. REFER: MECHANICAL
24. REMOVE EXISTING 1" THICK INTERIOR WOOD PANELING APPLIED DIRECTLY TO CMU.
25. REMOVE ALL EXISTING INTERIOR BATT INSULATION ABOVE THE ACOUSTICAL CEILING TILE THROUGHOUT.
26. APPROX. LOCATION OF EXISTING (2) FIBER LINES IN ORANGE SLEEVES ABOVE CEILING TO REMAIN - DO NOT CUT OR DEMO - REQUIRES PREGON MEETING WITH CITY IT STAFF PRIOR TO DEMO OF ANY EQUIPMENT.
27. REMOVE AND SAVE EXISTING FIBEROPTIC/IT EQUIPMENT (WIRE CAGE, DOOR ACCESS CONTROL PANEL, VERTICAL PLUG STRIP, UPS, FIBER SPLICE, AND WALL MOUNTED RACK) AND RETURN TO OWNER-REQUIRES PREGON MEETING WITH CITY IT STAFF PRIOR TO DEMO OF ANY EQUIPMENT.
28. REMOVE EXISTING BUILT-IN MILLWORK.
29. REMOVE EXISTING COFFERED CEILING.
30. REMOVE EXISTING NON-LOADBEARING FACE BRICKVENEER-REFER STRUCTURAL AND DEMOLITION ELEVATION SHEET D2.0 FOR EXTENTS.
31. REMOVE EXISTING NON-LOADBEARING CMU-REFER STRUCTURAL AND DEMOLITION ELEVATION SHEET D2.0 FOR EXTENTS.
32. REMOVE EXISTING DOWNLIGHTS IN EXISTING SOFFIT AND WALL MOUNTED LIGHT FIXTURE. EXISTING CEILING MOUNTED CAMERA TO REMAIN.
33. REMOVE PARTIAL EXISTING PLASTER SOFFIT. APPROXIMATELY 3'-1" TO REMAIN. REFER 02/A6.1.

WALL LEGEND

EXISTING CONSTRUCTION TO REMAIN

EXISTING CONSTRUCTION TO BE DEMOLISHED

THE MCKINNEY PARTNERSHIP
architects

3600 West Main
Suite 200
Norman, Oklahoma
73072
405.360.1400 p
405.364.8287 f
tmparch.com

Copyright © 2008 The McKinney Partnership Architects, P.C., All Rights Reserved

Seal:

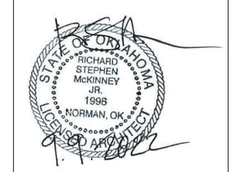

Project:

City of Norman
Municipal Complex Renovation
Municipal Court
321 N. Webster Avenue
Norman, OK

Issue Date:
11/15/22 ISSUED FOR BIDDING

Revisions:

Project Number:
CM083319

Sheet Title:
DEMOLITION FLOOR PLAN

Sheet Number:
D3.0

GENERAL DEMOLITION NOTES

1. THE SCOPE OF THE WORK INCLUDES ALL ELEMENTS NECESSARY TO ACCOMMODATE THE NEW WORK. ALL EXISTING CONSTRUCTION TO REMAIN U.N.O.
2. THE DEMO CONTRACTOR SHALL VERIFY ALL FIELD CONDITIONS AND NOTIFY GENERAL CONTRACTOR OF ANY DISCREPANCIES PRIOR TO COMMENCEMENT OF THE WORK.
3. DURING THE DEMOLITION PHASE THE DEMO CONTRACTOR SHALL SUPPORT ALL EXISTING STRUCTURES AS REQUIRED TO MAINTAIN A SAFE WORKING ENVIRONMENT. ANY DAMAGE CAUSED BY THE DEMOLITION PROCESS WILL BE CORRECTED BY THE DEMO CONTRACTOR AT NO COST TO OWNER.
4. IF THE DEMOLITION PROCESS RESULTS IN AN UNSAFE WORKING ENVIRONMENT, STOP WORK IMMEDIATELY AND NOTIFY THE APPROPRIATE AUTHORITY, GENERAL CONTRACTOR AND ARCHITECT PRIOR TO PROCEEDING.
5. PROVIDE ALL LIFE SAFETY SYSTEMS INCLUDING, BUT NOT LIMITED TO, TEMPORARY LIGHTING BARRICADES AND GUARD RAILS, AS REQUIRED BY LOCAL, STATE AND FEDERAL JURISDICTIONS.
6. DEMO CONTRACTOR SHALL ARRANGE TO IMMEDIATELY REMOVE AND LEGALLY DISPOSE OF ALL DEMOLITION MATERIALS.
7. PROCEED WITH DEMOLITION IN ACCORDANCE WITH ALL APPLICABLE CODES AND REGULATIONS.
8. COORDINATE WITH OWNER ON RUBBISH REMOVAL PROCEDURES, LOCATION OF TRASH DUMPSTERS TIME SCHEDULES, ETC. DISPOSE OF ALL RUBBISH IN A MANNER COMPLIANT WITH ALL LAWS, REGULATIONS, ETC.
9. PRIOR TO THE START OF ANY NEW CONSTRUCTION, CLEAN THE SITE OF ALL DEMOLITION DEBRIS. DEMO CONTRACTOR SHALL ASSURE THAT THE DEMOLITION WORK IS COMPLETE TO THE POINT WHERE NO ADDITIONAL DEMOLITION SHALL BE REQUIRED.
10. CONSULT WITH GENERAL CONTRACTOR PRIOR TO THE START OF DEMOLITION TO DETERMINE THE SCOPE OF ALL MATERIALS, FINISHES AND SYSTEMS THAT ARE TO BE REUSED.
11. ALL UTILITIES TO REMAIN U.N.O.
12. CONTRACTOR MUST UTILIZE REQUIRED ROOFING CONTRACTOR TO MAINTAIN EXISTING WARRANTY.

ROOF DEMOLITION PLAN KEYNOTES:

1. REMOVE EXISTING SECTION OF METAL COPING AND WOOD BLOCKING FOR NEW ENTRY STRUCTURE-REFER EXTERIOR ELEVATIONS.
2. REFER MECHANICAL, ELECTRICAL AND PLUMBING DEMOLITION PLANS FOR ANY ROOF EQUIPMENT TO BE REMOVED.
3. EXISTING EXHAUST FAN TO BE REMOVED AND ROOF PATCHED-REFER MECHANICAL DEMOLITION PLAN.

EXISTING ROOF:
TREMCO 3-PLY COLD PROCESSED SYSTEM WITH FLOOD COAT AND GRAVEL BALLAST

REQUIRED ROOFING CONTRACTOR:
WTI TREMCO
JAIME CARTER
304-444-6489
JCarter@tremcoinc.com

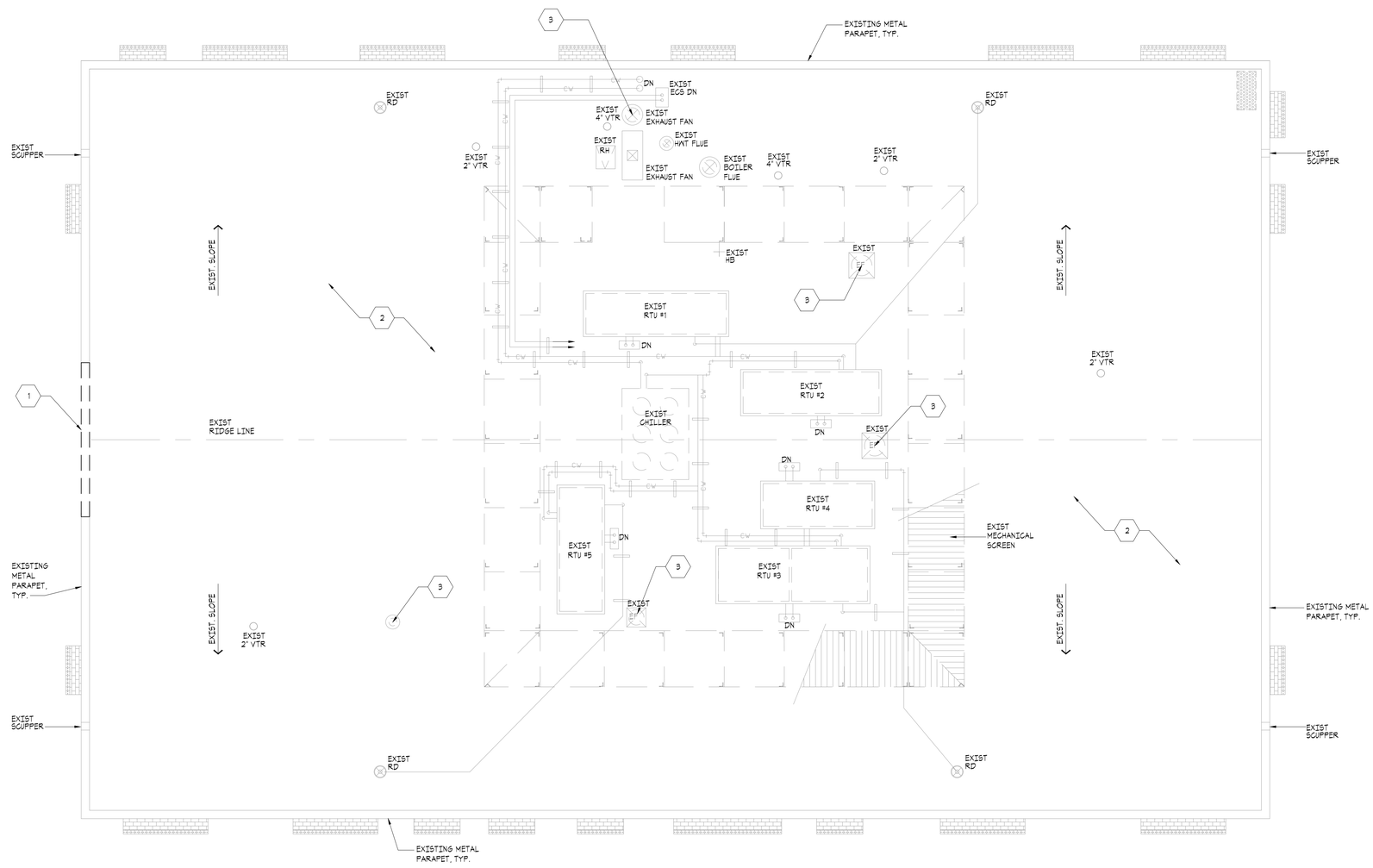

01 DEMOLITION ROOF PLAN
SCALE: 1/8" = 1'-0"

THE MCKINNEY PARTNERSHIP
architects
3600 West Main
Suite 200
Norman, Oklahoma
73072
405.360.1400 p
405.364.8287 f
tmparch.com

Copyright © 2008 The McKinney Partnership Architects, P.C., All Rights Reserved

Seal:

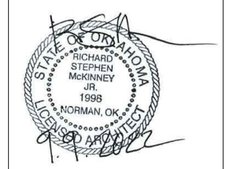

Project:

City of Norman
Municipal Complex Renovation
Municipal Court
321 N. Webster Avenue
Norman, OK

Issue Date:
11/15/22 ISSUED FOR BIDDING

Revisions:

Project Number:
CM083319

Sheet Title:
DEMOLITION ROOF PLAN

Sheet Number:
D4.0

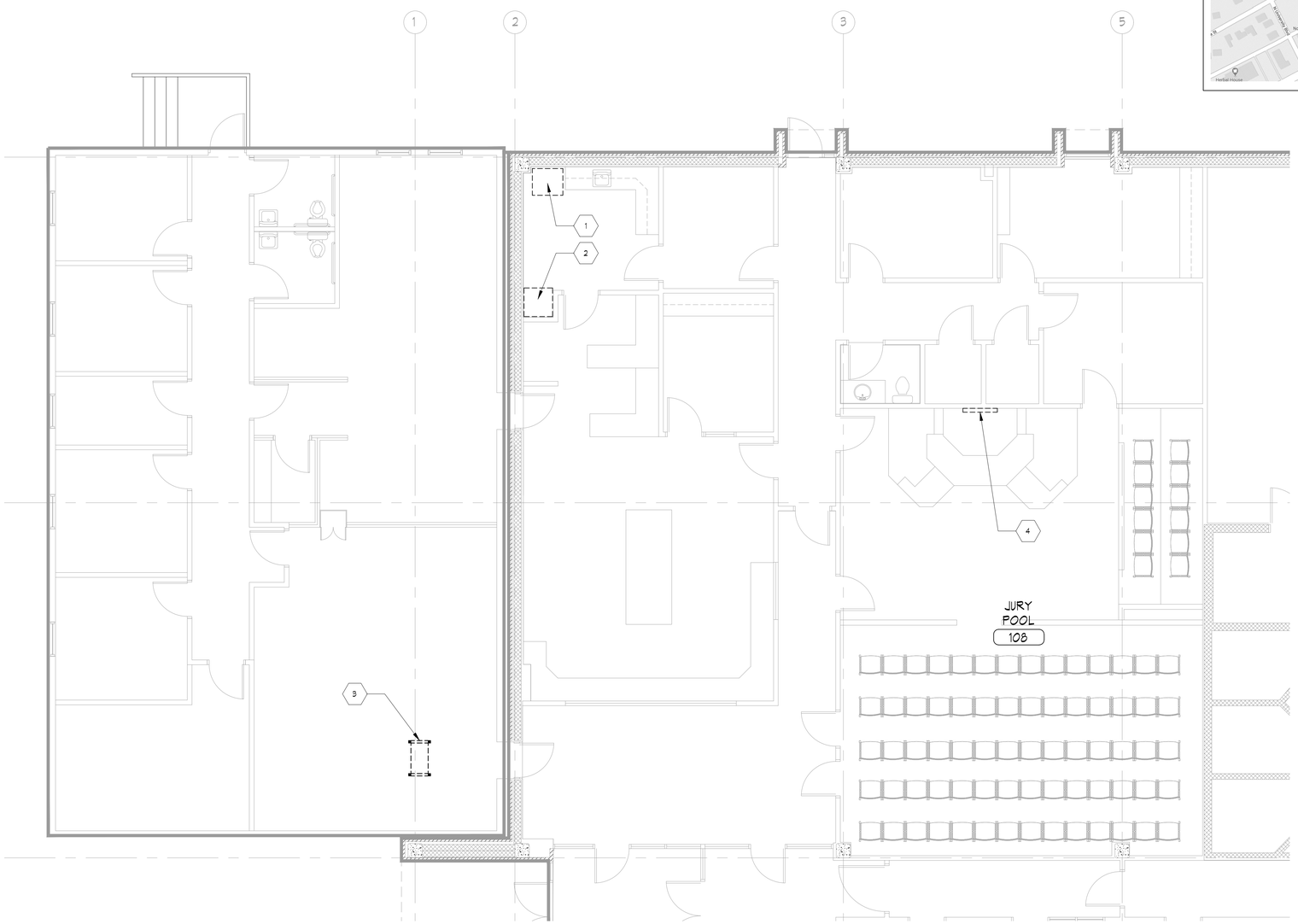

01 DEMOLITION FLOOR PLAN- EXISTING MUNICIPAL COURT

SCALE: 3/16" = 1'-0"

KEY PLAN

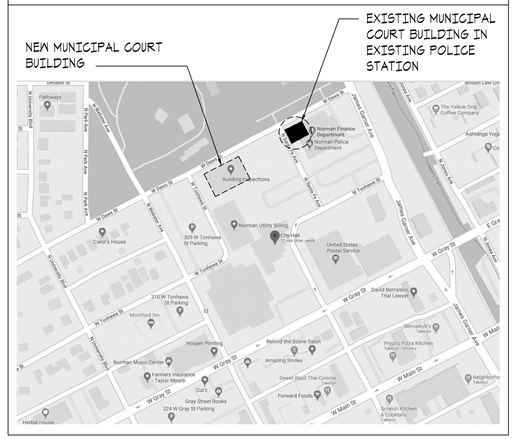

DEMOLITION NOTES:

1. OWNER RESPONSIBLE FOR MOVING FURNITURE, EQUIPMENT, AND FURNISHINGS U.O.N.

DEMOLITION KEY NOTES:

1. CONTRACTOR TO RELOCATE EXISTING REFRIGERATOR TO NEW MUNICIPAL COURT BUILDING.
2. CONTRACTOR TO RELOCATE EXISTING SAFE TO NEW MUNICIPAL COURT BUILDING.
3. CONTRACTOR TO RELOCATE EXISTING METAL DETECTOR TO NEW MUNICIPAL COURT BUILDING.
4. CONTRACTOR TO PROTECT AND REMOVE EXISTING WALL MOUNTED CITY OF NORMAN SEAL AND RELOCATE TO NEW MUNICIPAL COURT BUILDING.

WALL LEGEND

EXISTING CONSTRUCTION TO REMAIN

EXISTING FURNITURE/EQUIPMENT TO BE RELOCATED TO NEW MUNICIPAL COURT

THE MCKINNEY PARTNERSHIP
architects

3600 West Main
Suite 200
Norman, Oklahoma
73072
405.360.1400 p
405.364.8287 f
tmparch.com

Copyright © 2008 The McKinney Partnership Architects, P.C., All Rights Reserved

Seal:

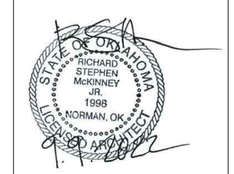

Project:

City of Norman
Municipal Complex Renovation
Municipal Court
321 N. Webster Avenue
Norman, OK

Issue Date:
11/15/22 ISSUED FOR BIDDING

Revisions:

Project Number:
CM083319

Sheet Title:
DEMOLITION FLOOR PLAN - EXISTING MUNICIPAL COURT

Sheet Number:
D5.0

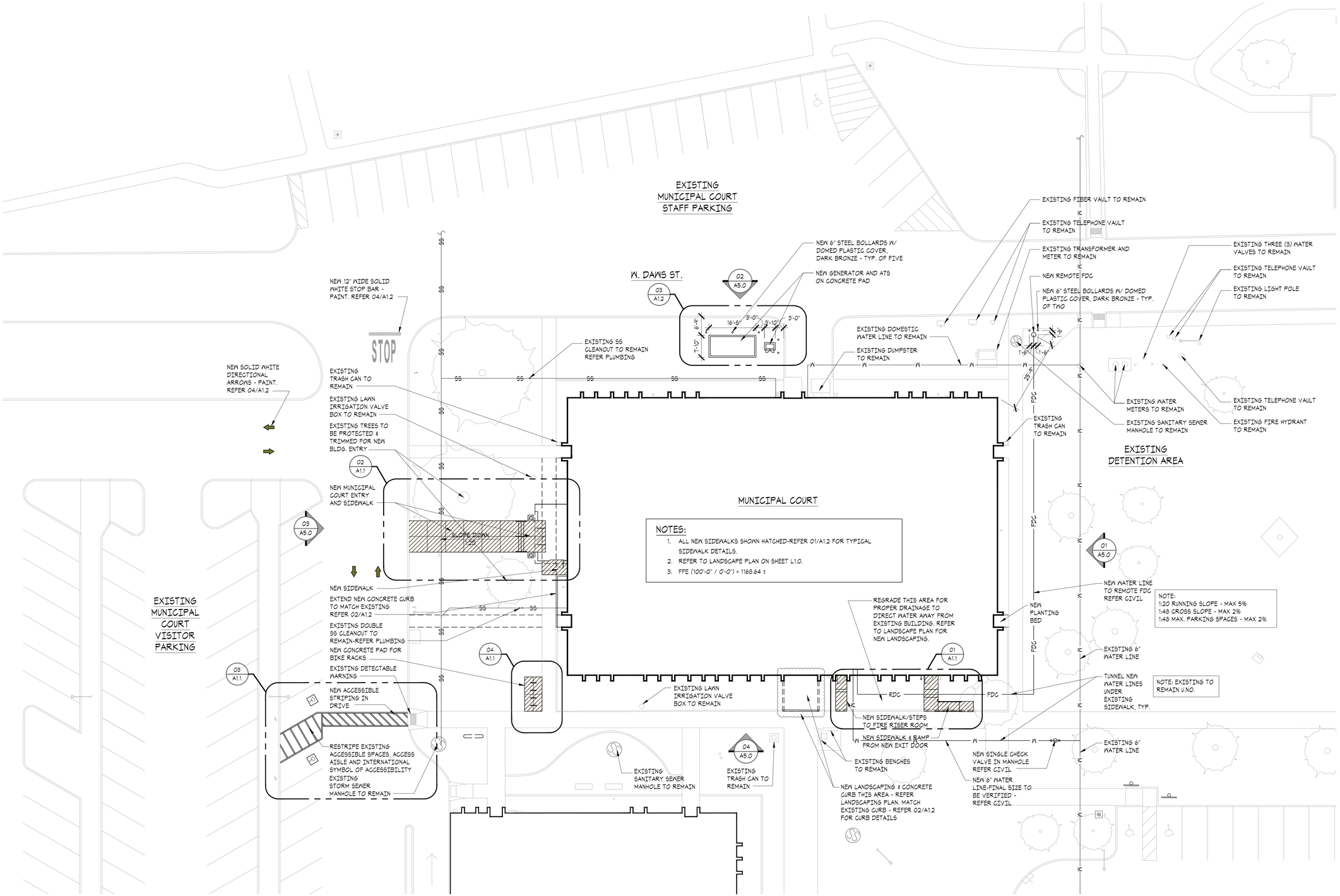

01 SITE PLAN
SCALE: 1/8" = 1'-0"

THE MCKINNEY PARTNERSHIP
architects

3600 West Main
Suite 200
Norman, Oklahoma
73072
405.360.1400 p
405.364.8287 f
tmparch.com

Copyright © 2008 The McKinney Partnership Architects, P.C., All Rights Reserved

Seal:

STATE OF OKLAHOMA
RICHARD STEPHEN McKINNEY JR.
1998
NORMAN, OK
LICENSED ARCHITECT

Project:

City of Norman
Municipal Complex Renovation
Municipal Court
321 N. Webster Avenue
Norman, OK

Issue Date:
11/15/22 ISSUED FOR BIDDING

Revisions:

Project Number:
CM083319

Sheet Title:
SITE PLAN

Sheet Number:
A1.0

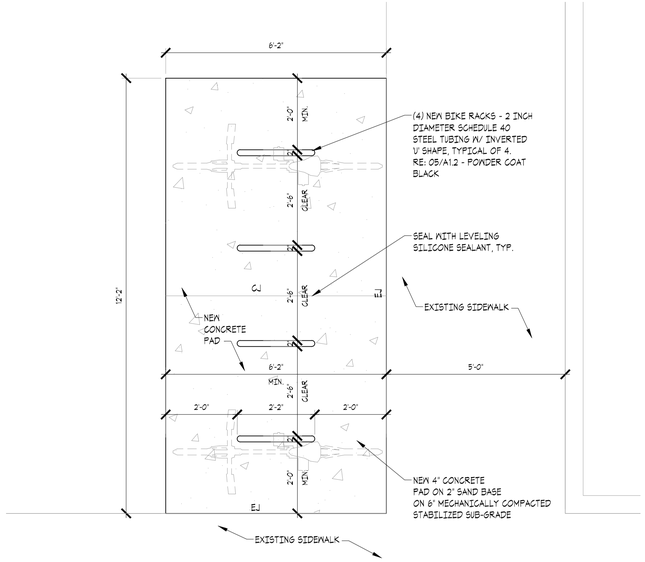

04 ENLARGED PLAN - BIKE RACK
SCALE: 1/2" = 1'-0"

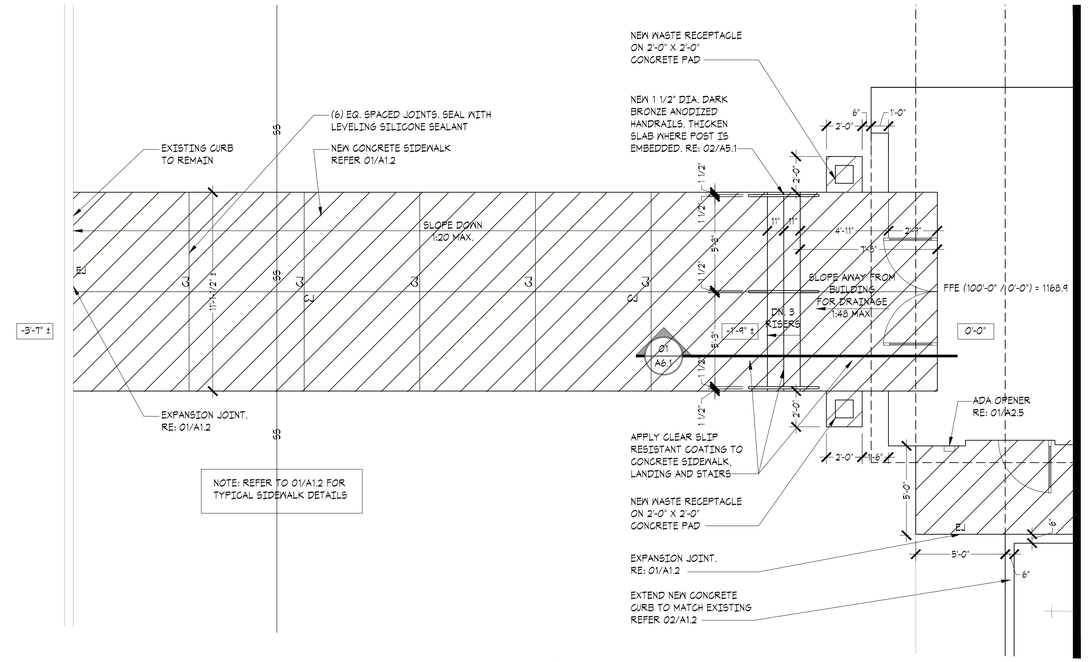

02 ENLARGED PLAN - SIDEWALK
SCALE: 1/4" = 1'-0"

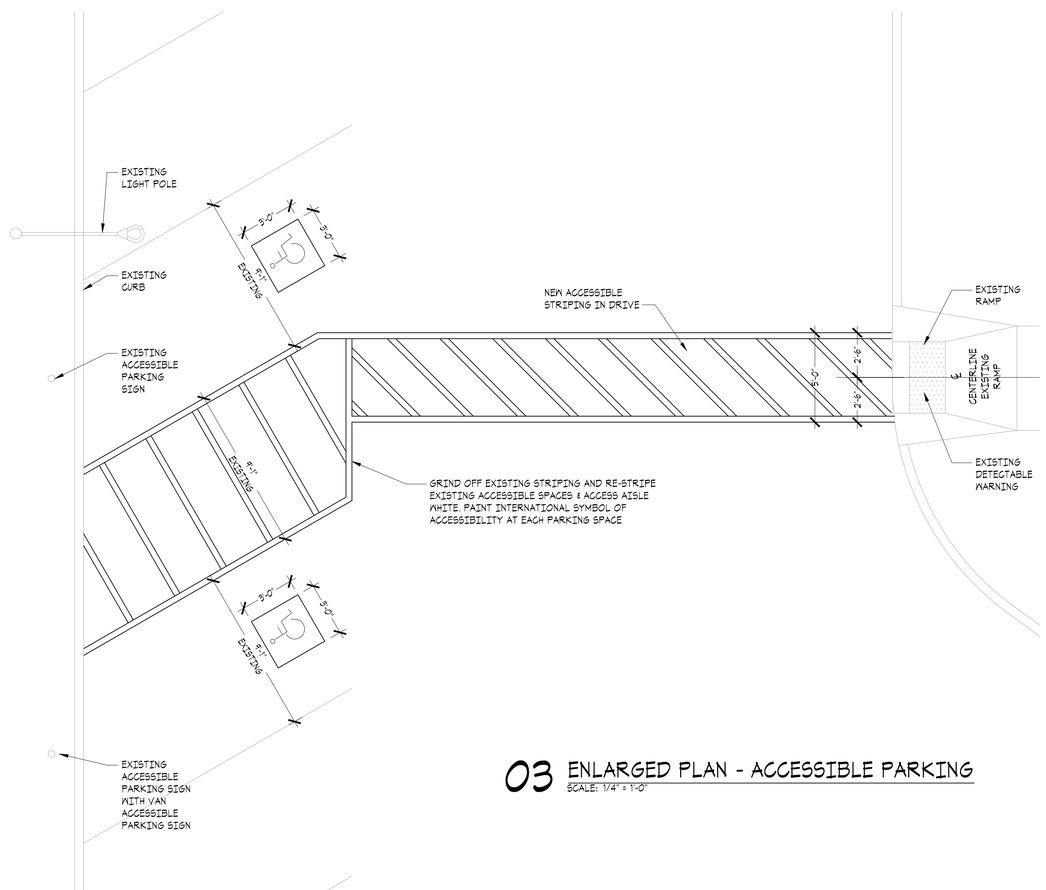

03 ENLARGED PLAN - ACCESSIBLE PARKING
SCALE: 1/4" = 1'-0"

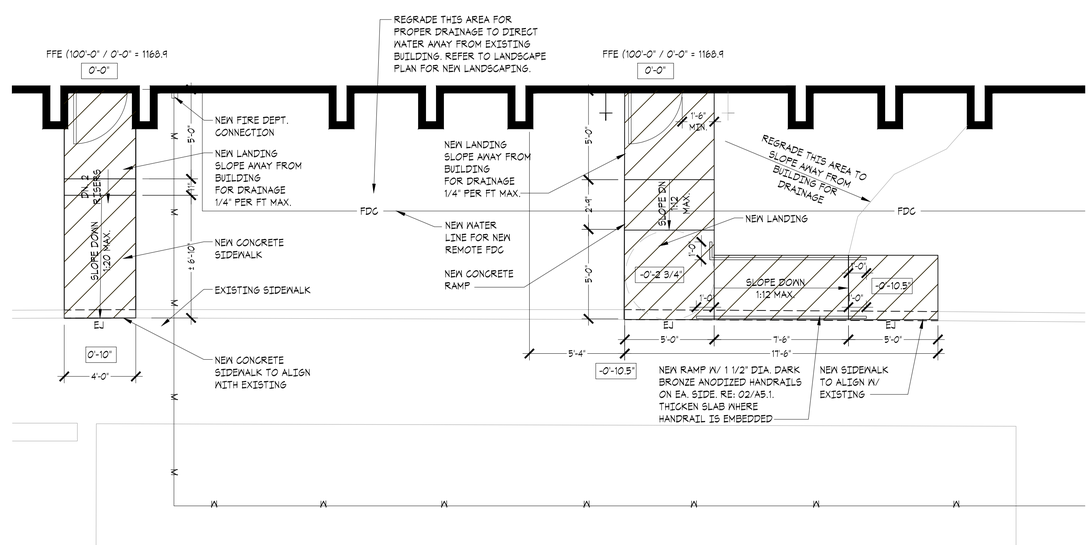

01 ENLARGED PLAN - SIDEWALK
SCALE: 1/4" = 1'-0"

THE MCKINNEY PARTNERSHIP
architects

3600 West Main
Suite 200
Norman, Oklahoma
73072
405.360.1400 p
405.364.8287 f
tmparch.com

Seal:

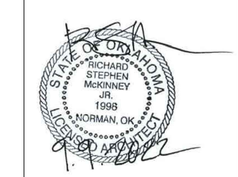

Project:

City of Norman
Municipal Complex Renovation
Municipal Court
321 N. Webster Avenue
Norman, OK

Issue Date:
11/15/22 ISSUED FOR BIDDING

Revisions:

Project Number:
CM083319

Sheet Title:
SITE PLAN DETAILS

Sheet Number:
A1.1

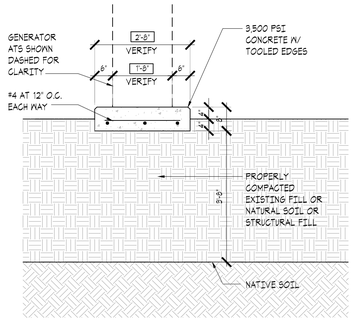

07 SECTION - ATS
SCALE: 1/2" = 1'-0"

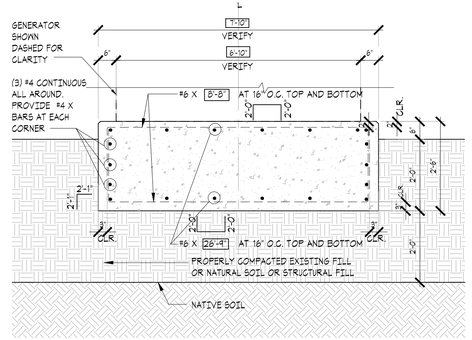

NOTES:
GENERATOR MANUFACTURER SHALL PROVIDE ANCHOR BOLTS AND TEMPLATES FOR EQUIPMENT AND VERIFICATION OF OPERATIONAL HEIGHTS FOR REVIEW BY STRUCTURAL ENGINEER.

ALL DIMENSIONS INDICATED THUS ▭ TO BE VERIFIED WITH FINAL EQUIPMENT SELECTION AND ADJUSTMENTS MADE TO THESE DIMENSIONS PRIOR TO CONSTRUCTION.

REFER STRUCTURAL PLANS FOR ALL GENERAL NOTES.

ALL CONCRETE TO BE AIR ENTRAINED 4-6% AND BE 4,000 PSI.

06 SECTION - GENERATOR PAD
SCALE: 1/2" = 1'-0"

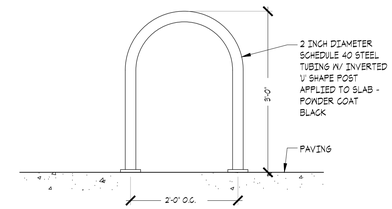

05 TYPICAL BIKE RACK DETAIL
SCALE: 3/4" = 1'-0"

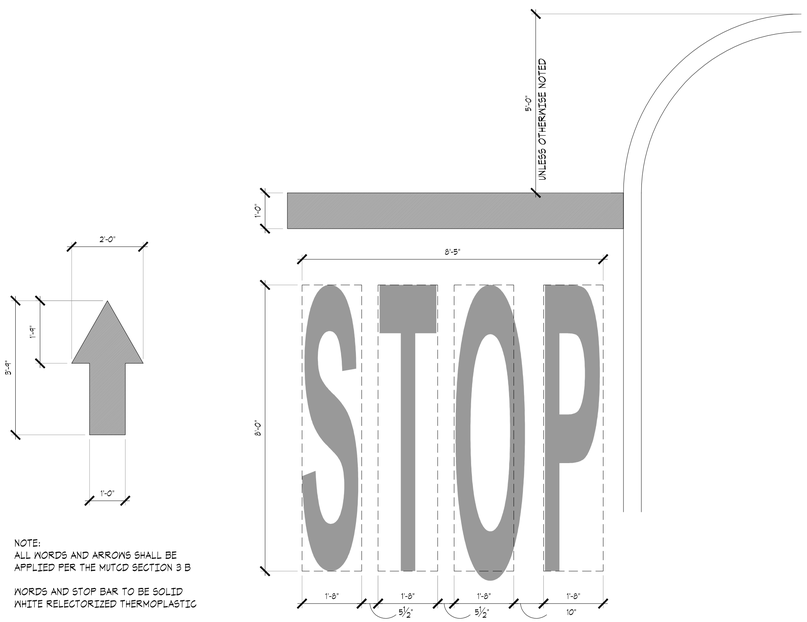

04 ENLARGED PLAN - TRAFFIC MARKINGS
SCALE: 1/2" = 1'-0"

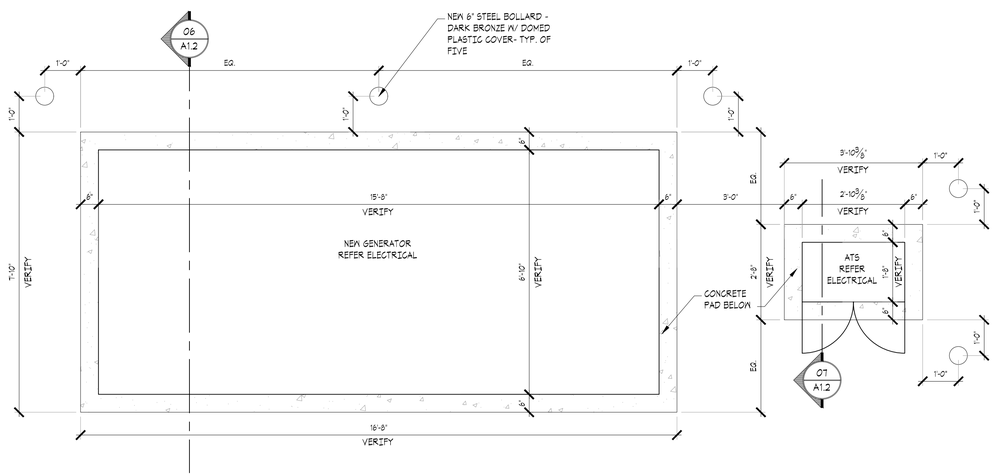

03 ENLARGED PLAN - GENERATOR PAD
SCALE: 1/2" = 1'-0"

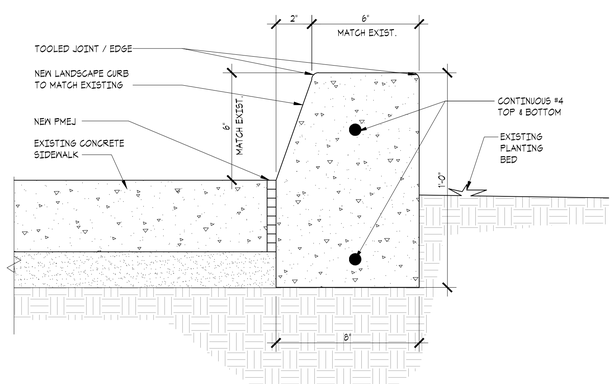

02 TYPICAL RAISED PLANTER CURB DETAIL
SCALE: 3/4" = 1'-0"

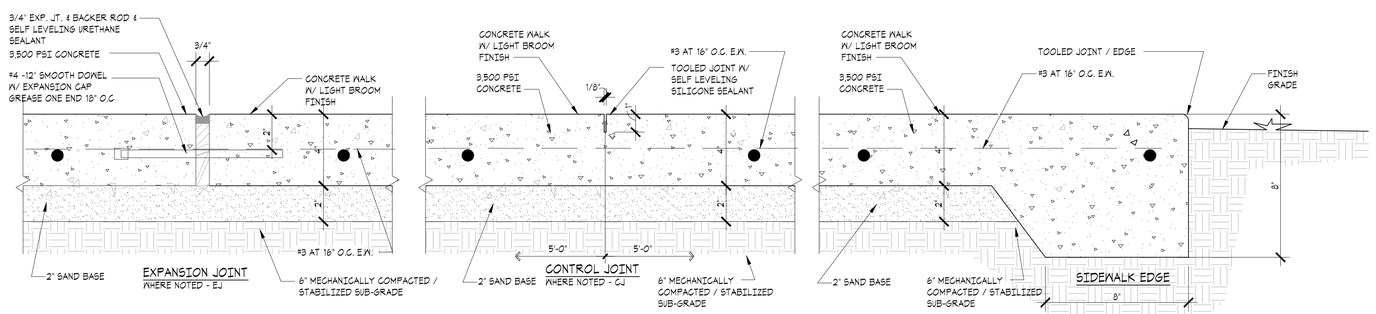

01 TYPICAL SIDEWALK SECTION DETAIL
SCALE: 3" = 1'-0"

THE MCKINNEY PARTNERSHIP
architects
3600 West Main
Suite 200
Norman, Oklahoma
73072
405.360.1400 p
405.364.8287 f
tmparch.com

Seal:

Project:

City of Norman
Municipal Complex Renovation
Municipal Court
321 N. Webster Avenue
Norman, OK

Issue Date:
11/15/22 ISSUED FOR BIDDING

Revisions:

Project Number:
CM083319

Sheet Title:
SITE PLAN DETAILS

Sheet Number:
A1.2

FLOOR PLAN GENERAL NOTES:

1. ALL CONSTRUCTION TO CONFORM TO ALL APPLICABLE BUILDING CODES - LATEST ADOPTED EDITIONS - REFER LSP1.0
2. ANY DISCREPANCIES BETWEEN DRAWINGS AND / OR SPECIFICATIONS AND FIELD CONDITIONS SHALL BE REFERRED TO ARCHITECT FOR ADJUSTMENT DURING BIDDING OR BEFORE WORK COMMENCES.
3. INSTALL ALL PRODUCTS AND ASSEMBLIES IN STRICT ACCORDANCE WITH MANUFACTURERS SPECIFICATIONS AND INSTRUCTIONS.
4. ALL DIMENSIONS ARE SHOWN TO FINISH FACE OF GWB U.O.N. ON PLANS. DOORS SHALL BE LOCATED 4" FROM ADJACENT PERPENDICULAR WALL U.O.N. ON PLANS.
5. ALL FURN. & EQUIP. BY OWNER SHOWN DASHED - N.I.C. ALL EQUIPMENT NOT IN CONTRACT PROVIDED BY OWNER AND INSTALLED BY OWNER'S EQUIPMENT VENDOR U.O.N. COORDINATE ALL REQUIREMENTS OF ITEMS WITH OWNER. ALL BREAK (S) AND COFFEE (S) EQUIPMENT SHALL BE PROVIDED BY OWNER AND INSTALLED BY G.C. THIS INCLUDES UNDER COUNTER DISHWASHER, UNDER COUNTER REFRIGERATOR, FULL SIZE REFRIGERATOR, MICROWAVE, AND COFFEE MACHINES.
6. CAULK ALL JOINTS OR CRACKS WHICH OCCUR WHERE DISSIMILAR MATERIALS INTERSECT PERPENDICULAR TO EA. OTHER, AND THE INTERSECTION IS EXPOSED TO VIEW. U.O.N.
7. PROVIDE SLIP JOINT CONNECTIONS AT THE TOPS OF ALL PARTITIONS WHICH INTERSECT STRUCTURE. SEE PARTITION TYPES FOR TYPICAL SLIP JOINT CONNECTION DESIGN. IF AMOUNT OF DEFLECTION IS NOT INDICATED, SEEK CLARIFICATION FROM ARCHITECT PRIOR TO INSTALLATION.
8. INSTALLATION DETAILS AND DIMENSIONS MAY DIFFER FROM THOSE SHOWN. CONTRACTOR SHALL VERIFY INSTALLATION REQUIREMENTS FOR ALL PRODUCTS TO BE INCORPORATED IN THE WORK (INCLUDING PARTITION THICKNESS FOR RECESSED PRODUCTS). I'ZS RESPONSIBLE FOR ACCOMMODATING ANY CHANGES TO OTHER MATERIALS OR PRODUCTS THAT ARE NECESSARY BECAUSE OF THESE DIFFERENCES.
9. REFER TO A0.1 FOR PARTITION TYPES
10. PROVIDE AND INSTALL GWB WALL CONTROL JOINTS (CJ) AT MAXIMUM 30'-0" ON CENTER SPACING ON ALL WALLS. COORDINATE LOCATION IN FIELD WITH ARCHITECT PRIOR TO INSTALLATION. IT IS THE INTENT OF THE DESIGN TO ALIGN WITH CJS IN THE CEILING PLANE AS MUCH AS POSSIBLE
11. CONTRACTOR TO PROVIDE SOLID, CONTINUOUS, FIRE RATED WOOD BLOCKING FOR ALL MILLWORK AND OTHER MISCELLANEOUS ASSEMBLIES REQUIRING BLOCKING.
12. ALL DOORS AND DOOR CLEARANCES, AND FIXTURES SHALL COMPLY WITH LOCAL ACCESSIBILITY GUIDELINES.
13. REFER TO OWNER'S DIMENSIONAL PLAN ON SHEET A2.1.
14. REFER SHEET A4.2 FOR CORNER GUARD LOCATIONS.

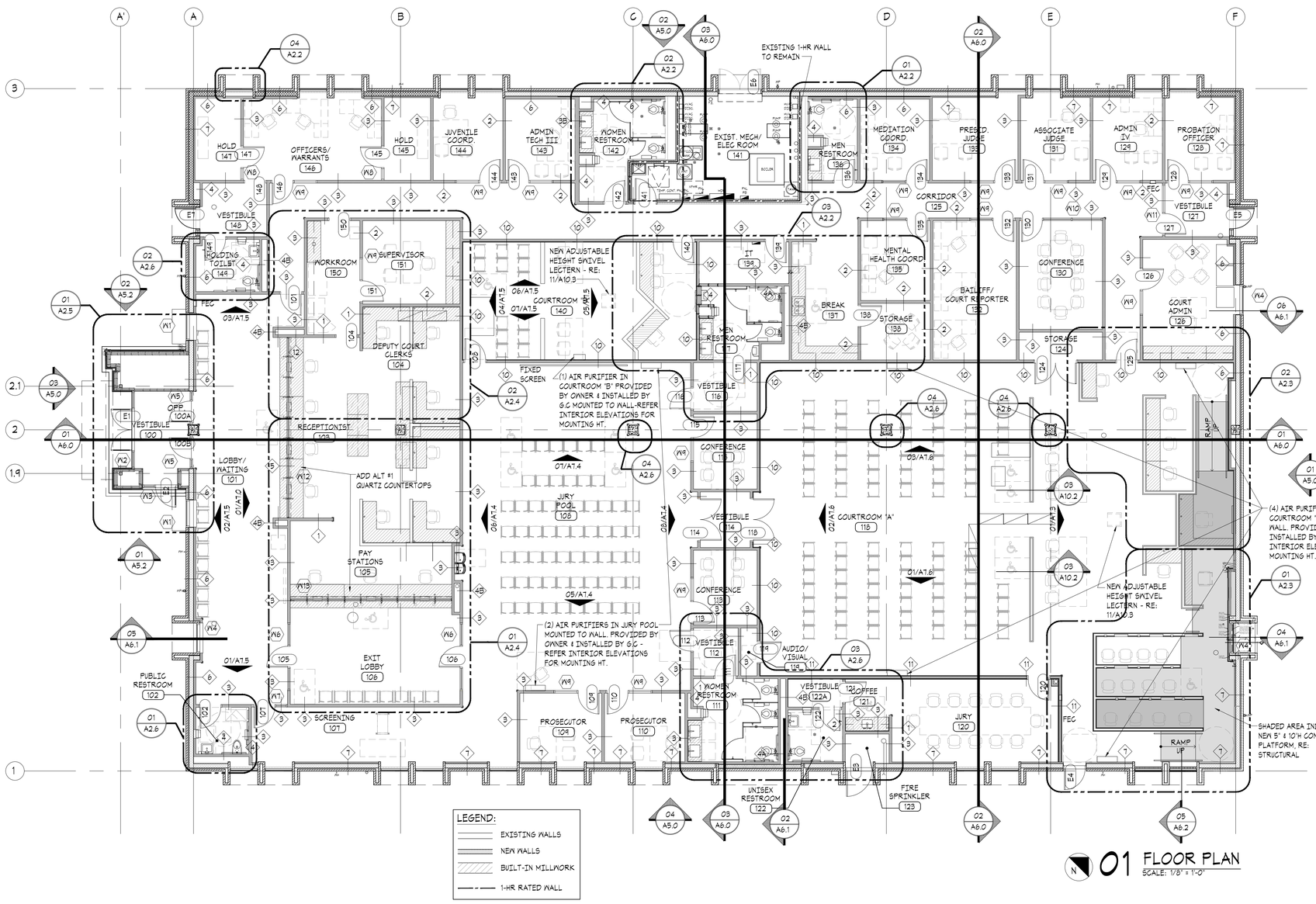

01 FLOOR PLAN
SCALE: 1/8" = 1'-0"

THE MCKINNEY PARTNERSHIP
architects

3600 West Main
Suite 200
Norman, Oklahoma
73072
405.360.1400 p
405.364.8287 f
tmparch.com

Seal:

STATE OF OKLAHOMA
RICHARD STEPHEN McKINNEY JR.
1998
NORMAN, OK.
LICENSED ARCHITECT

Project:

City of Norman
Municipal Complex Renovation
Municipal Court
321 N. Webster Avenue
Norman, OK

Issue Date:
11/15/22 ISSUED FOR BIDDING

Revisions:

Project Number:
CM083319

Sheet Title:
FLOOR PLAN

Sheet Number:
A2.0

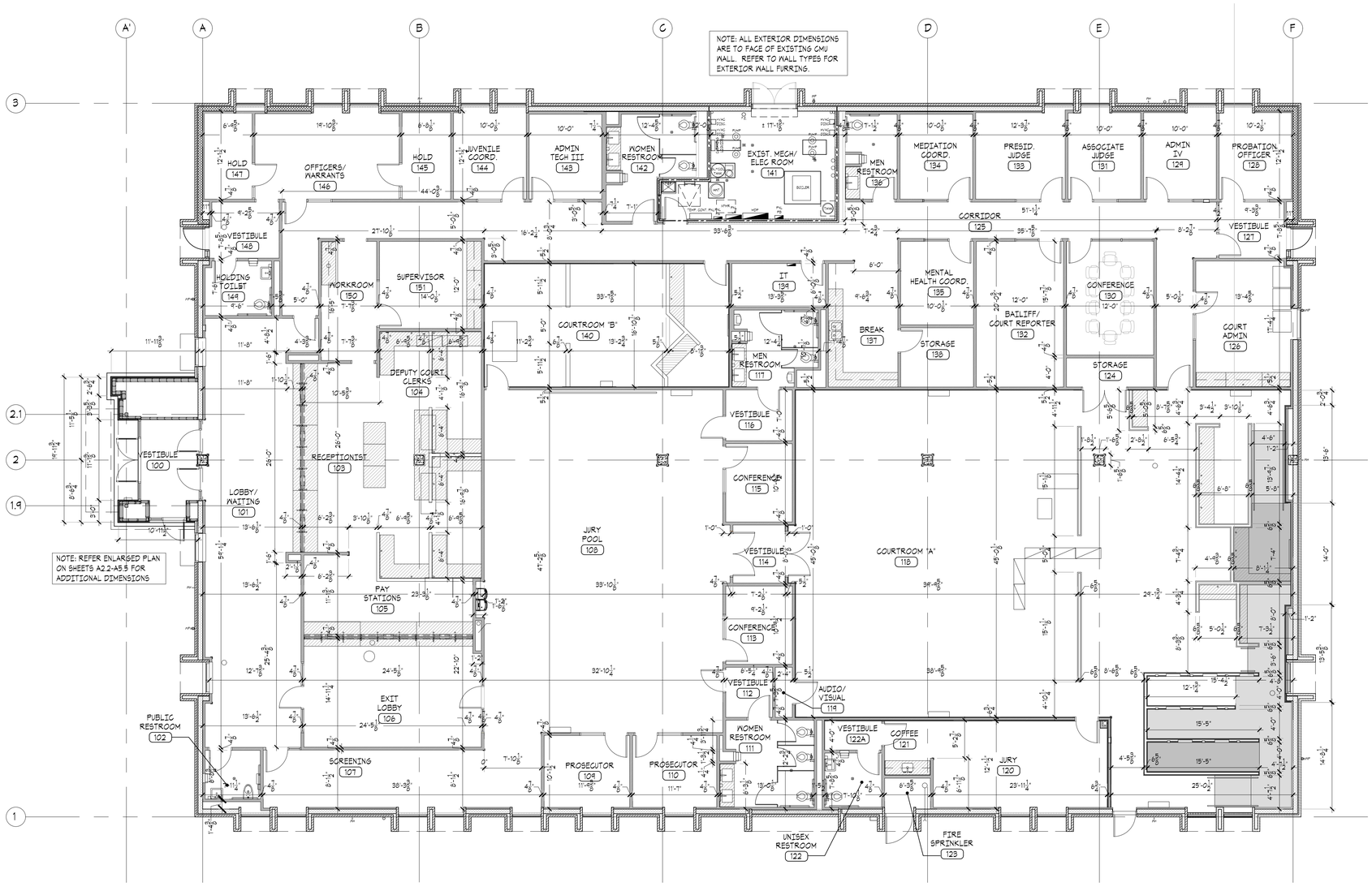

01 DIMENSIONAL PLAN
SCALE: 1/8" = 1'-0"

THE MCKINNEY PARTNERSHIP
architects

3600 West Main
Suite 200
Norman, Oklahoma
73072
405.360.1400 p
405.364.8287 f
tmparch.com

Seal:

STATE OF OKLAHOMA
RICHARD STEPHEN McKINNEY JR.
1998
NORMAN, OK
LICENSED ARCHITECT

Project:

City of Norman
Municipal Complex Renovation
Municipal Court
321 N. Webster Avenue
Norman, OK

Issue Date:
11/15/22 ISSUED FOR BIDDING

Revisions:

Project Number:
CM083319

Sheet Title:
DIMENSIONAL PLAN

Sheet Number:
A2.1

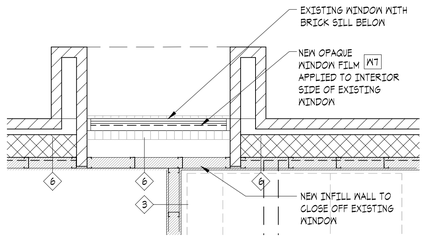

04 ENLARGED PLAN WINDOW INFILL
SCALE: 1/2" = 1'-0"

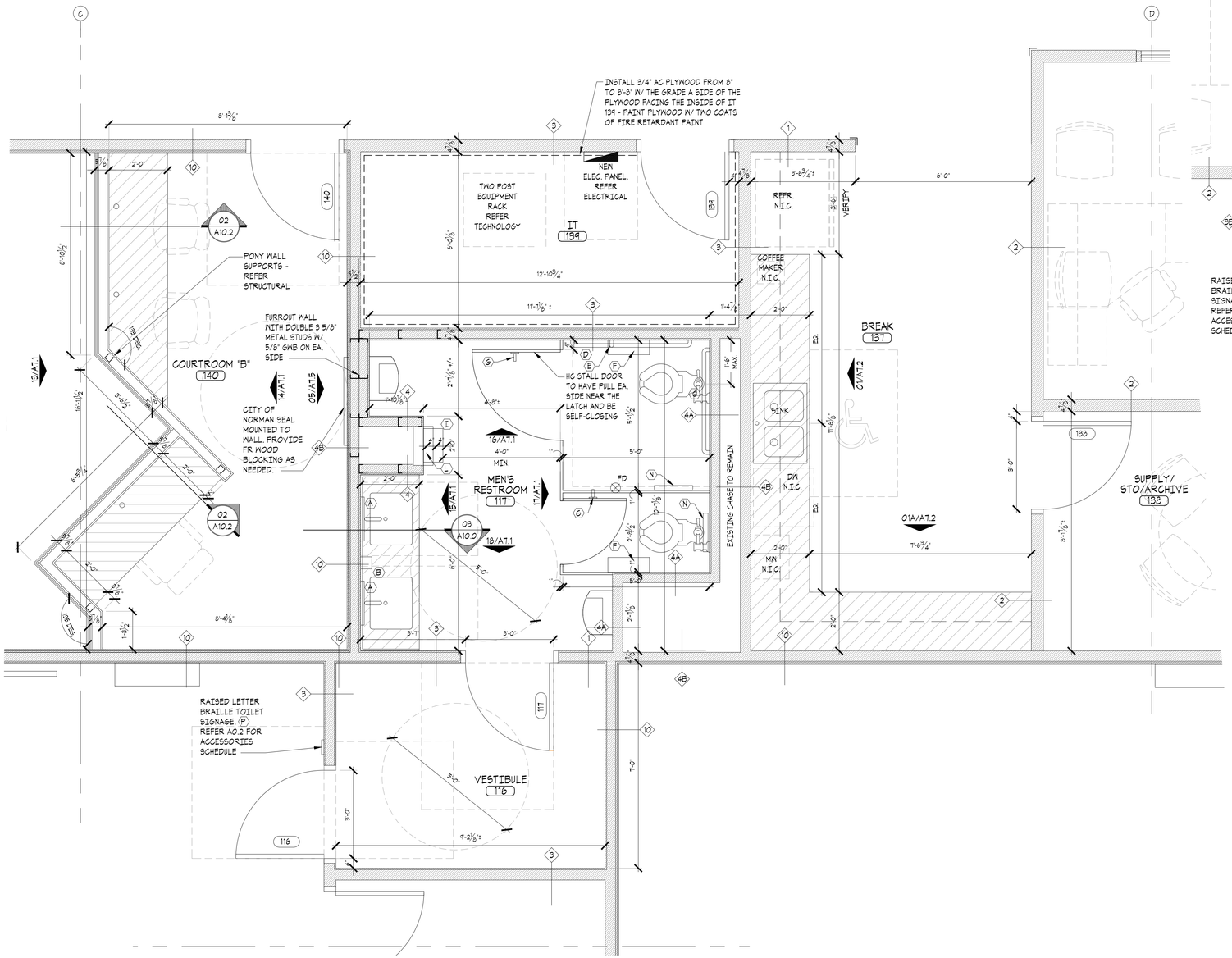

03 ENLARGED PLAN MEN'S RESTROOM 117/KITCHEN 137/COURTROOM "B" 140
SCALE: 1/2" = 1'-0"

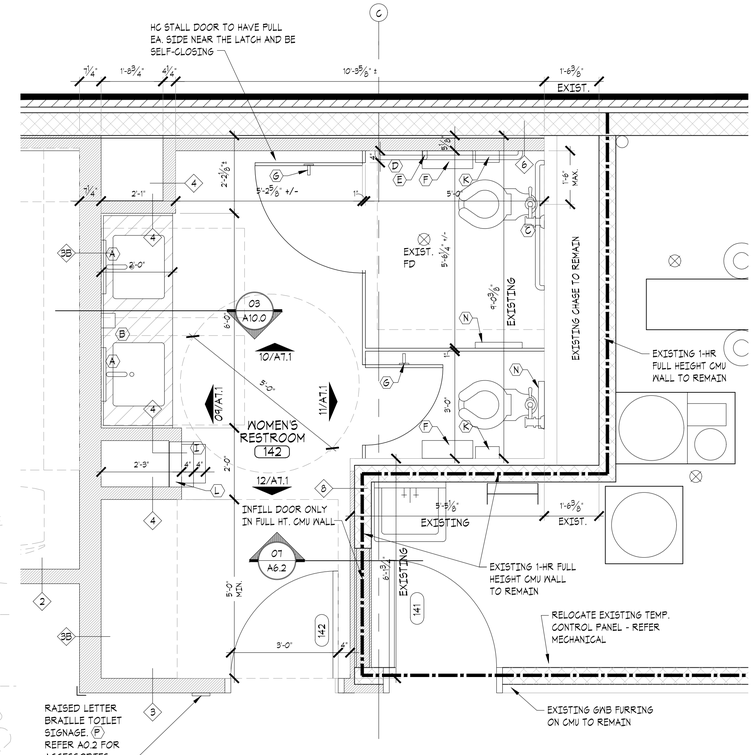

02 ENLARGED PLAN WOMEN'S RESTROOM 142
SCALE: 1/2" = 1'-0"

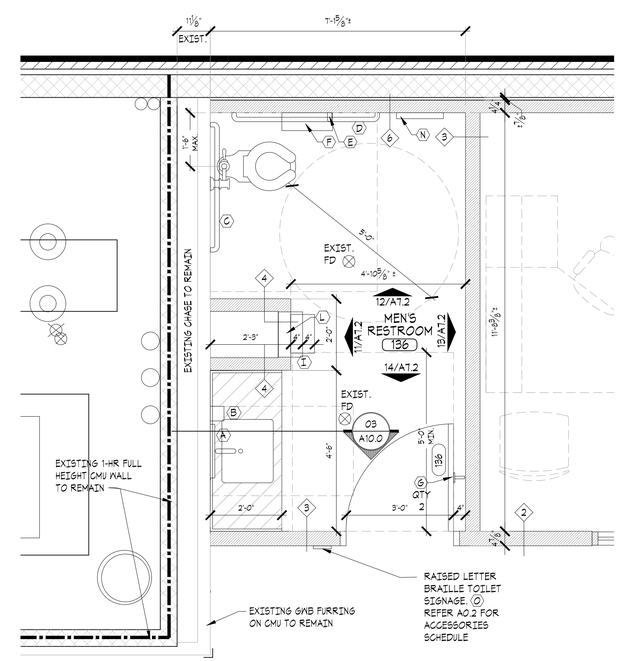

01 ENLARGED PLAN MEN'S RESTROOM 136
SCALE: 1/2" = 1'-0"

THE MCKINNEY PARTNERSHIP
architects
3600 West Main
Suite 200
Norman, Oklahoma
73072
405.360.1400 p
405.364.8287 f
tmparch.com

Seal:

STATE OF OKLAHOMA
RICHARD STEPHEN McKINNEY JR.
1998
NORMAN, OK.
LICENSED ARCHITECT

Project:

City of Norman
Municipal Complex Renovation
Municipal Court
321 N. Webster Avenue
Norman, OK

Issue Date:
11/15/22 ISSUED FOR BIDDING

Revisions:

Project Number:
CM083319

Sheet Title:
ENLARGED PLANS

Sheet Number:
A2.2

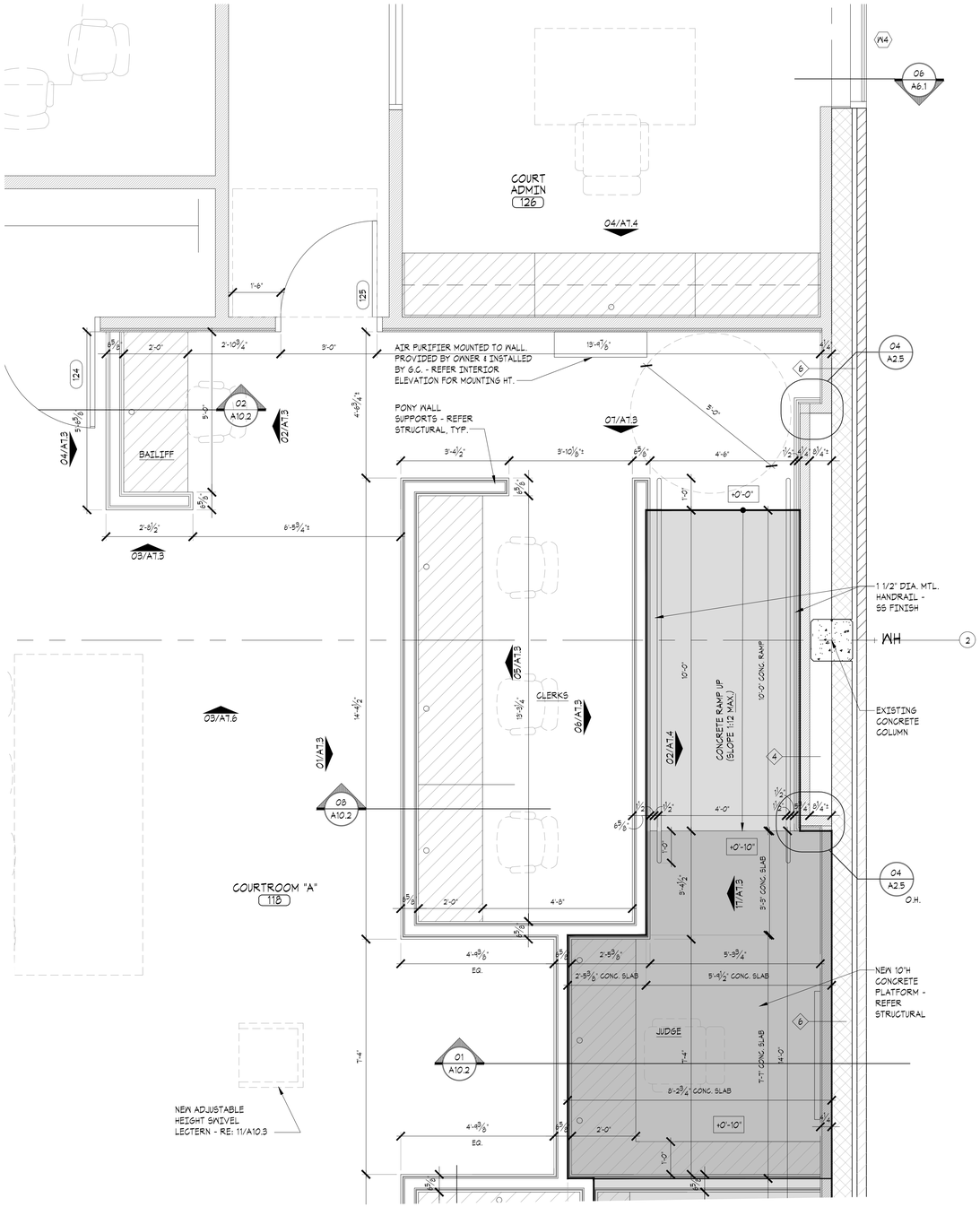

02 ENLARGED PLAN COURTROOM "A" 118
SCALE: 1/2" = 1'-0"

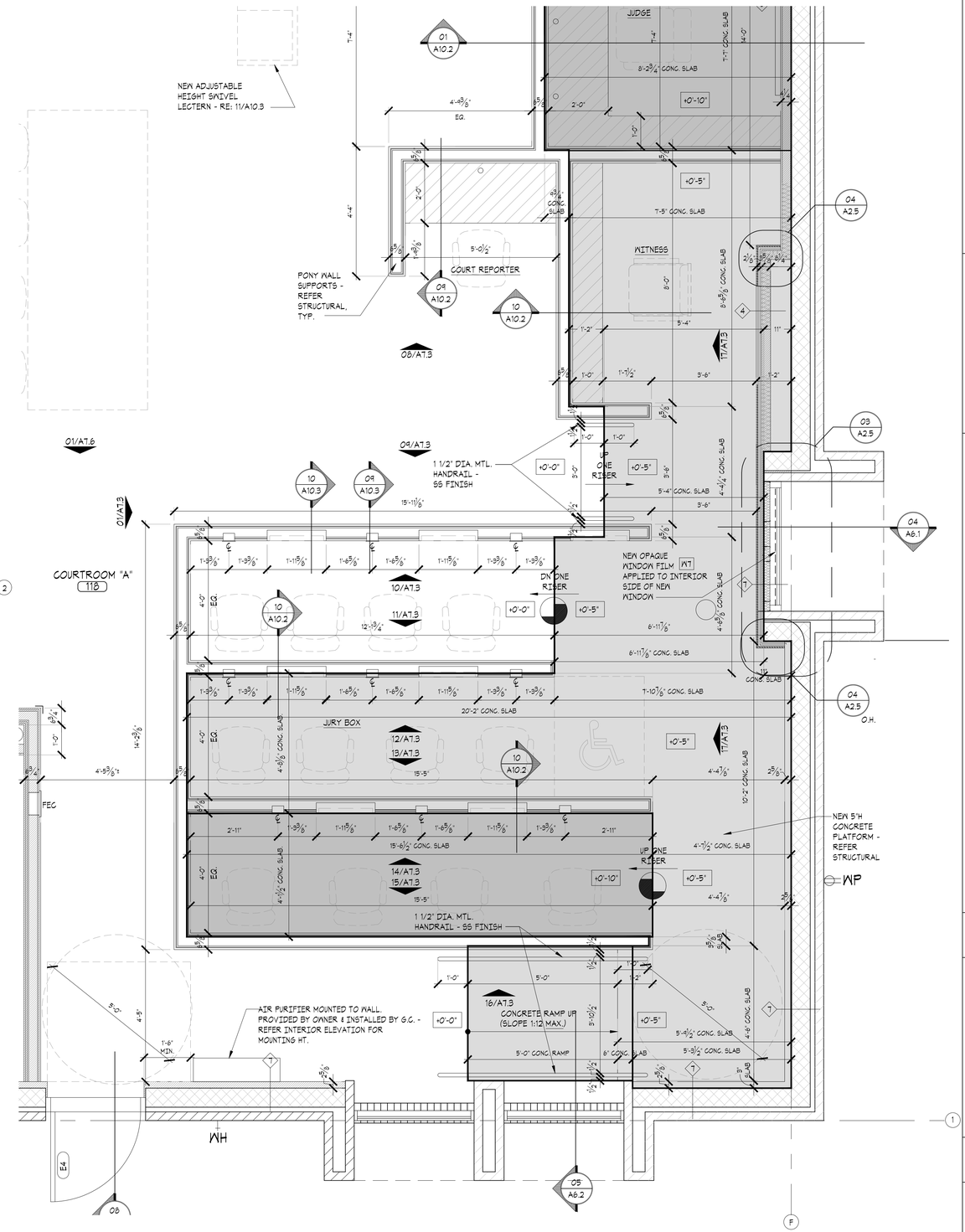

01 ENLARGED PLAN COURTROOM "A" 118
SCALE: 1/2" = 1'-0"

THE MCKINNEY PARTNERSHIP
architects

3600 West Main
Suite 200
Norman, Oklahoma
73072
405.360.1400 p
405.364.8287 f
tmparch.com

Seal:

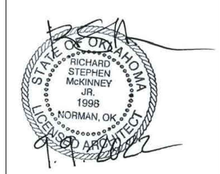

Project:

City of Norman
Municipal Complex Renovation
Municipal Court
321 N. Webster Avenue
Norman, OK

Issue Date:
11/15/22 ISSUED FOR BIDDING

Revisions:

Project Number:
CM083319

Sheet Title:
ENLARGED PLANS

Sheet Number:
A2.3

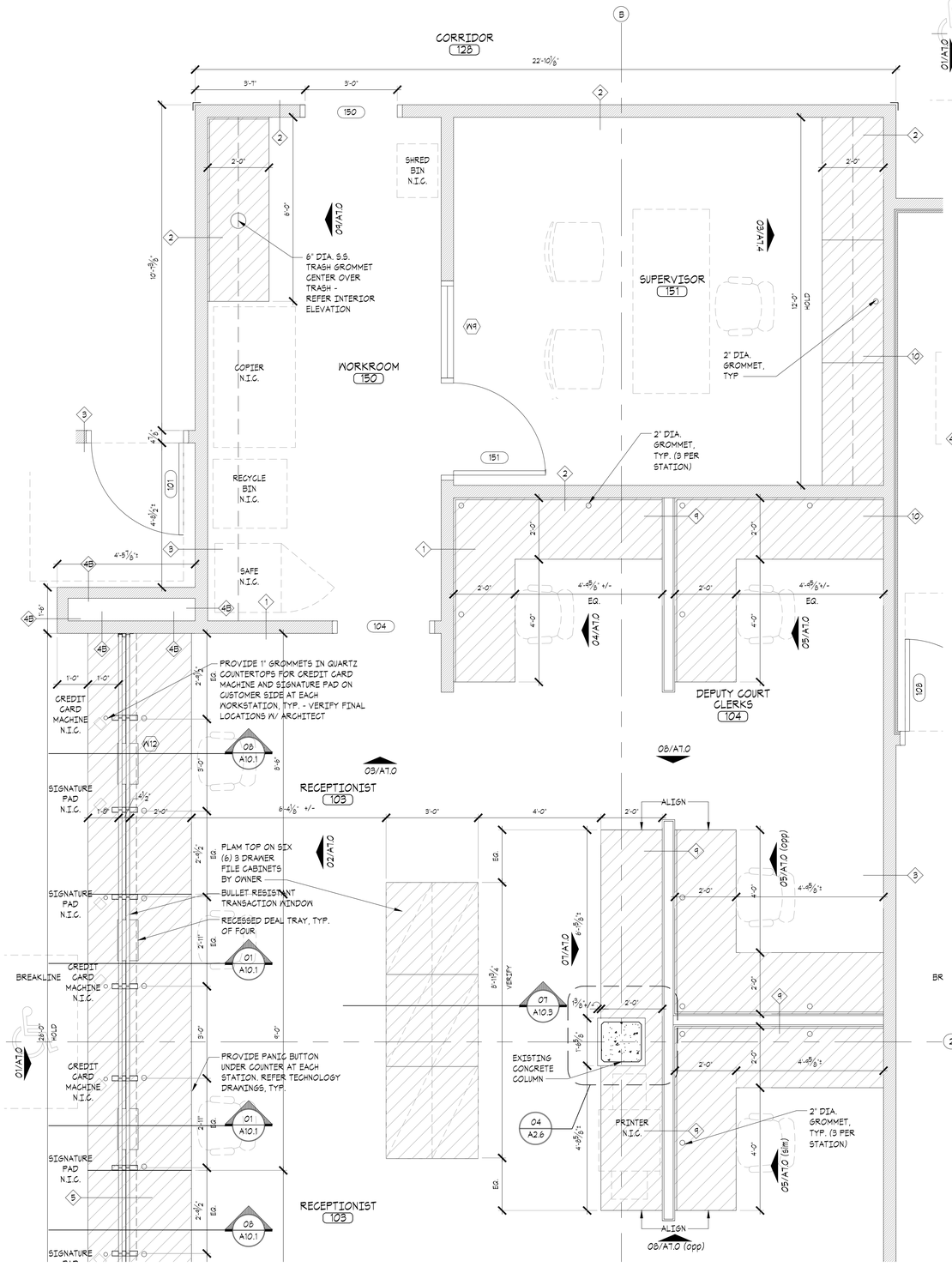

02 ENLARGED PLAN RECEPTIONIST 103/DEPUTY COURT CLERKS 104 WORKROOM 151/SUPERVISOR 152

SCALE: 1/2" = 1'-0"

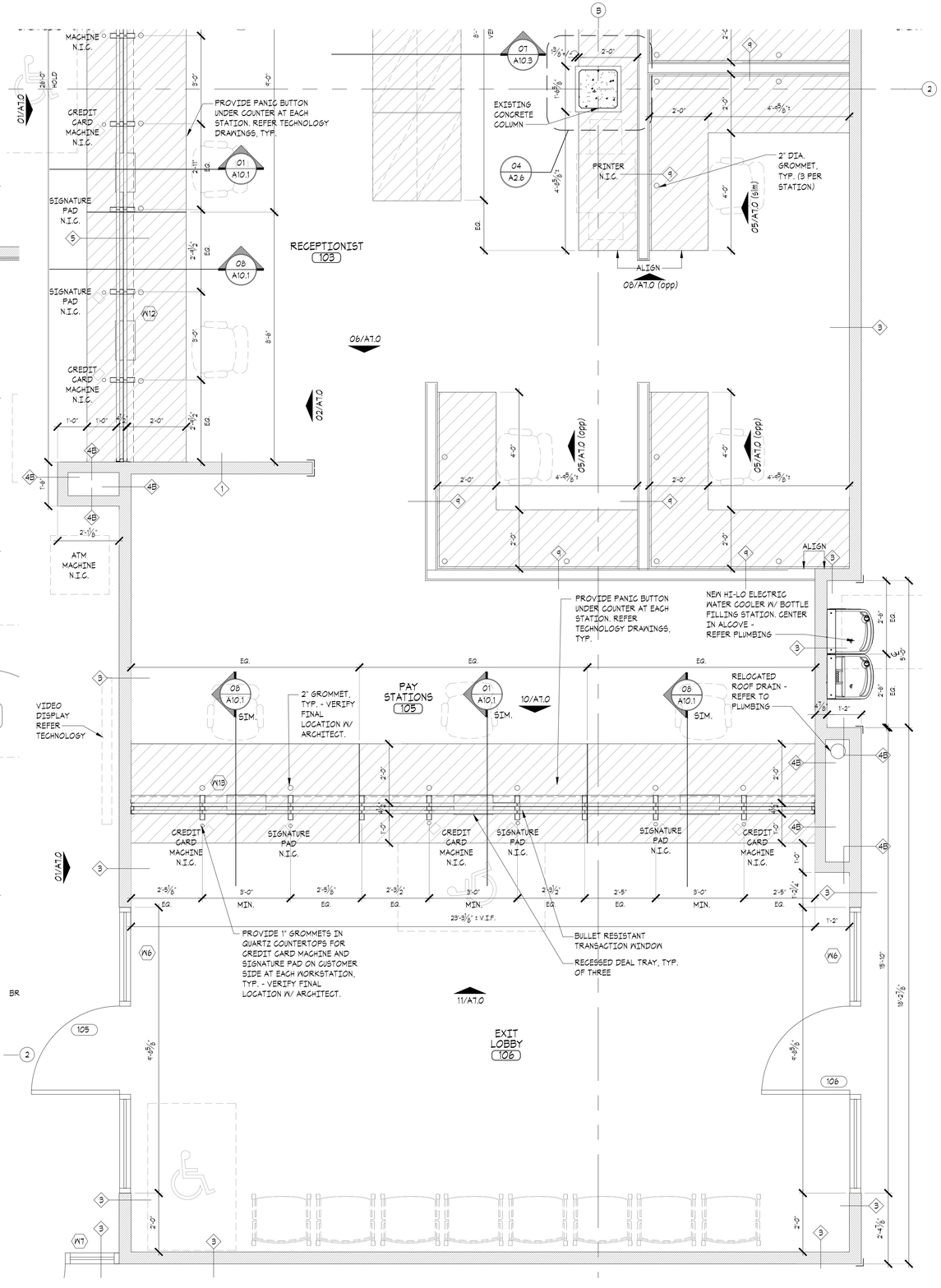

01 ENLARGED PLAN RECEPTIONIST 103/PAY STATIONS 105

SCALE: 1/2" = 1'-0"

THE MCKINNEY PARTNERSHIP
architects

3600 West Main
Suite 200
Norman, Oklahoma
73072
405.360.1400 p
405.364.8287 f
tmparch.com

Seal:

Project:

City of Norman
Municipal Complex Renovation
Municipal Court
321 N. Webster Avenue
Norman, OK

Issue Date:
11/15/22 ISSUED FOR BIDDING

Revisions:

Project Number:
CM083319

Sheet Title:
ENLARGED PLANS

Sheet Number:
A2.4

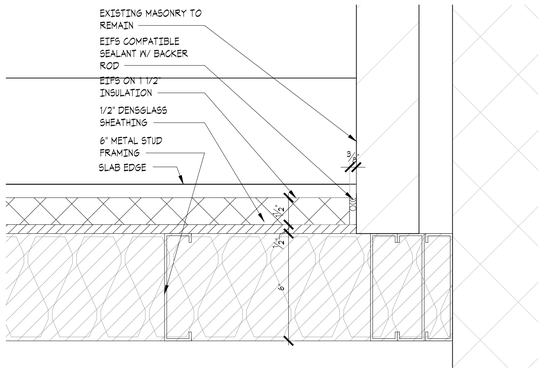

05 ENLARGED PLAN DETAIL
SCALE: 3" = 1'-0"

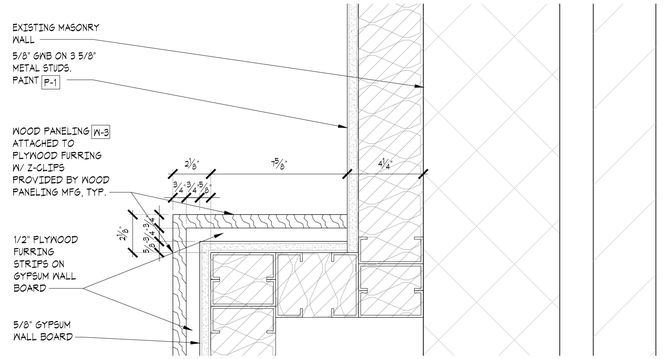

04 ENLARGED PLAN DETAIL
SCALE: 3" = 1'-0"

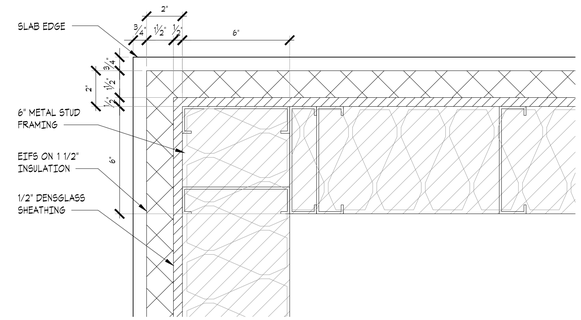

02 ENLARGED PLAN DETAIL
SCALE: 3" = 1'-0"

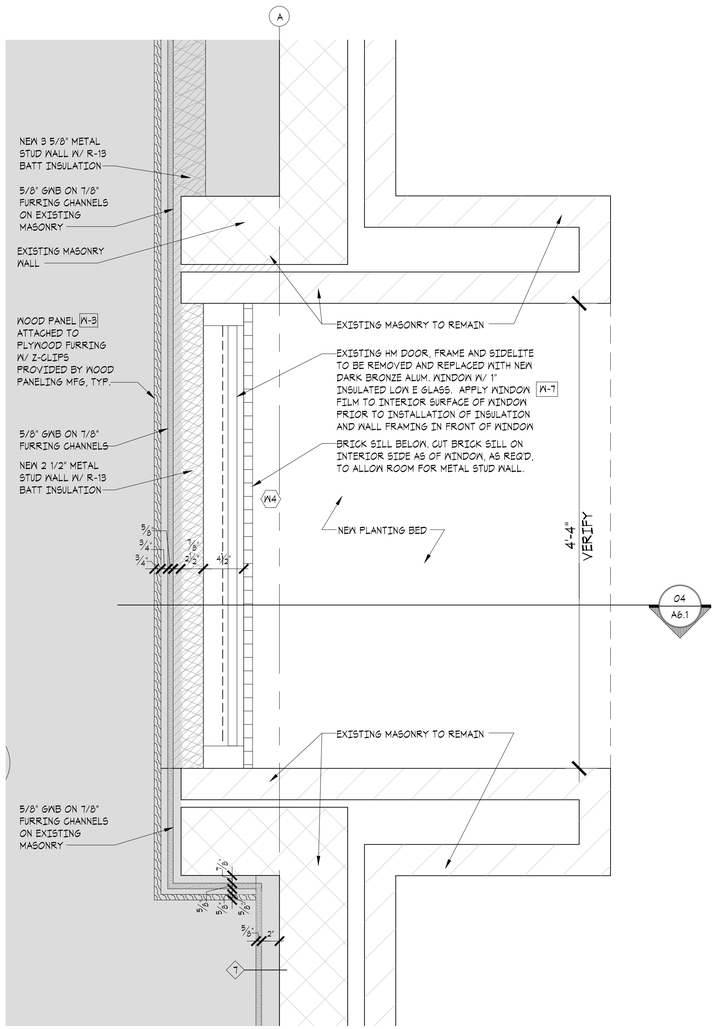

03 ENLARGED PLAN DETAIL
SCALE: 1 1/2" = 1'-0"

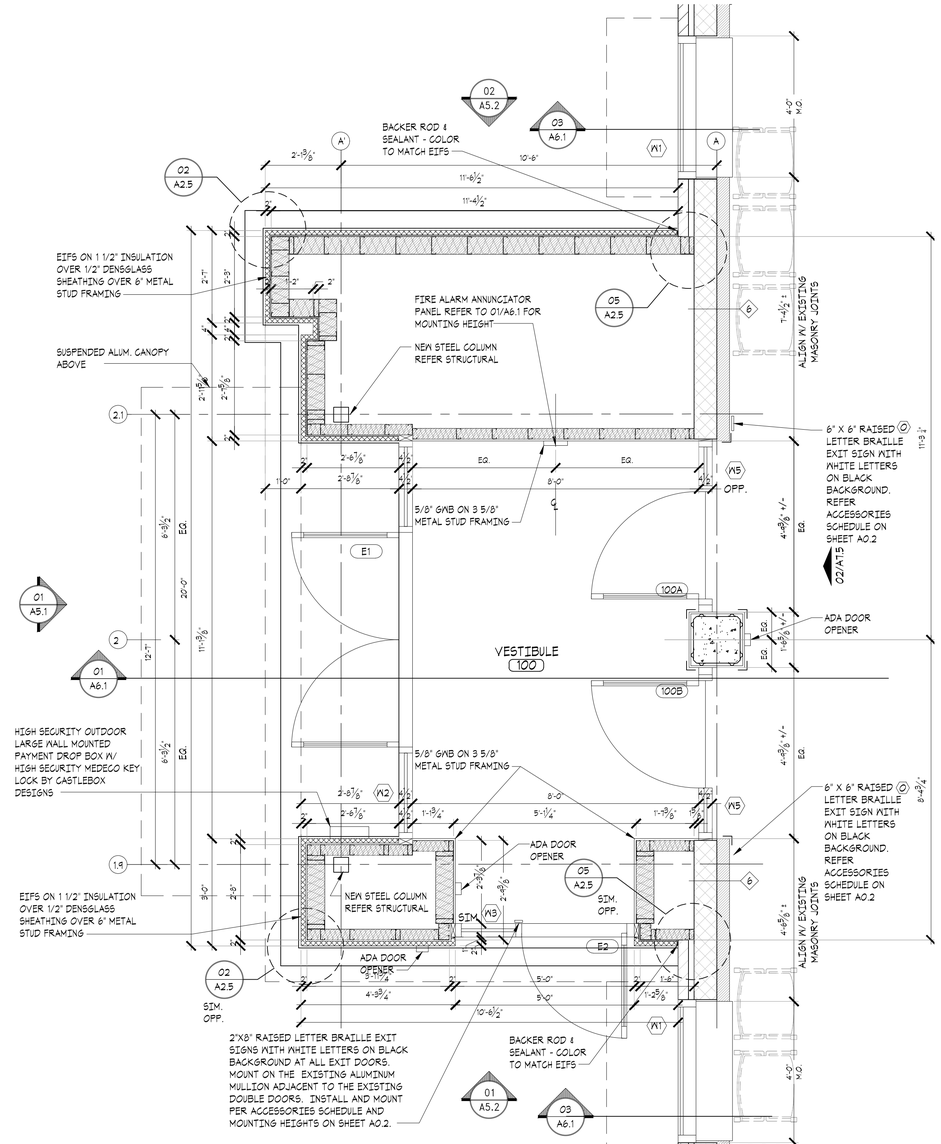

01 ENLARGED PLAN VESTIBULE 100
SCALE: 1/2" = 1'-0"

THE MCKINNEY PARTNERSHIP
architects

3600 West Main
Suite 200
Norman, Oklahoma
73072
405.360.1400 p
405.364.8287 f
tmparch.com

Seal:

Project:

City of Norman
Municipal Complex Renovation
Municipal Court
321 N. Webster Avenue
Norman, OK

Issue Date:
11/15/22 ISSUED FOR BIDDING

Revisions:

Project Number:
CM083319

Sheet Title:
ENLARGED PLANS

Sheet Number:
A2.5

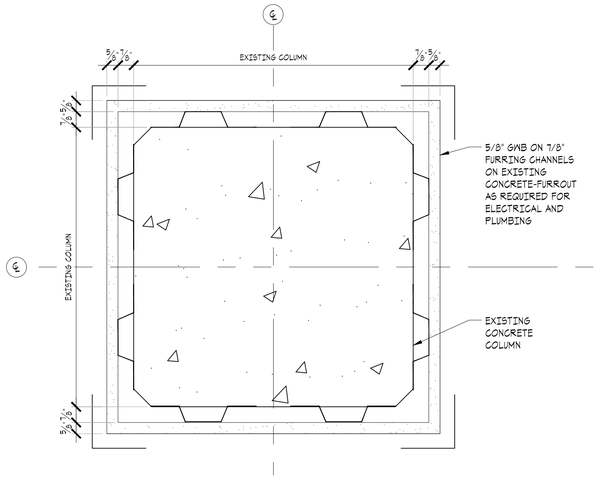

04 ENLARGED COLUMN PLAN
SCALE: 3" = 1'-0"

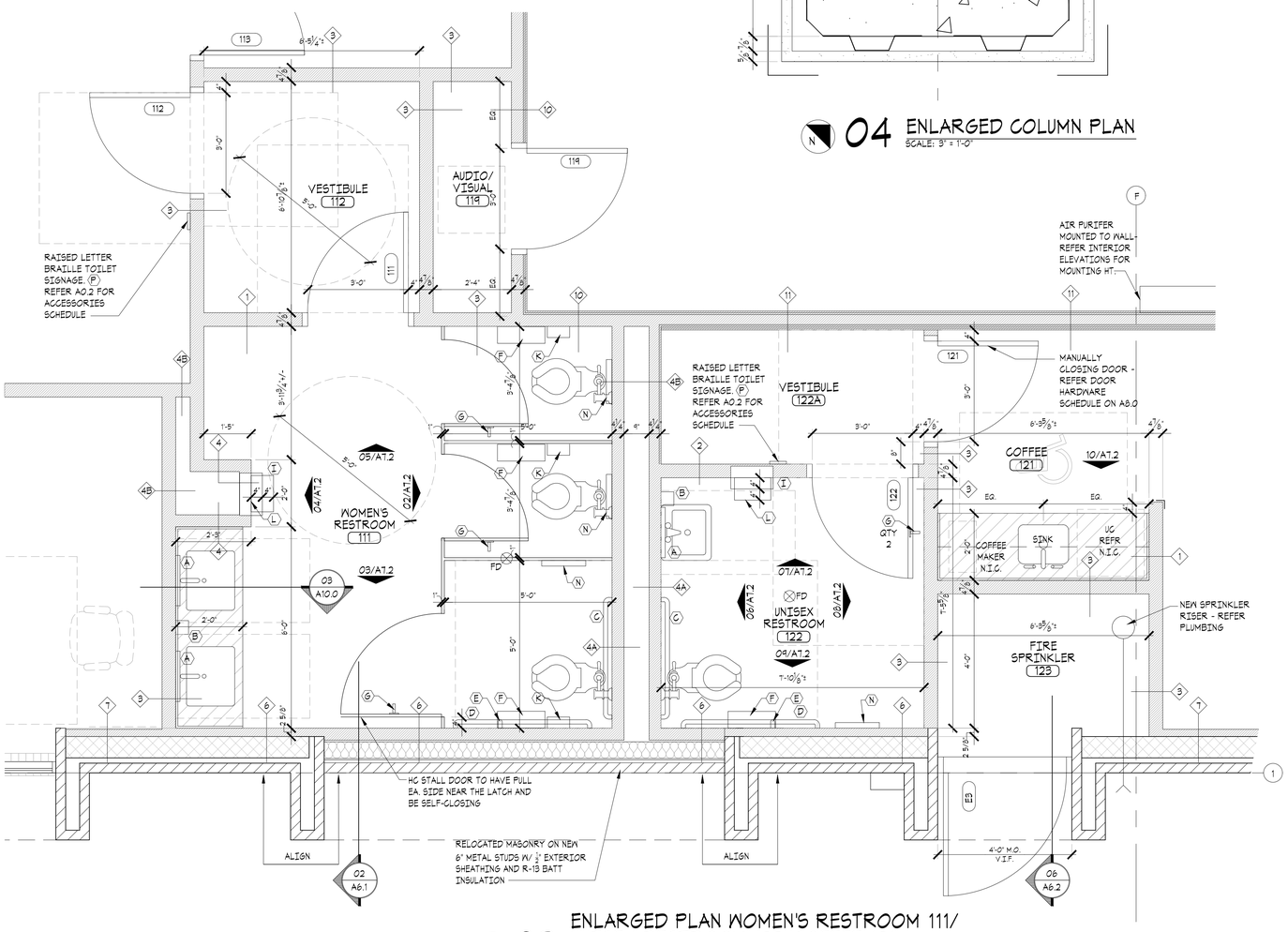

03 ENLARGED PLAN WOMEN'S RESTROOM 111/ UNISEX RESTROOM 122/COFFEE 121
SCALE: 1/2" = 1'-0"

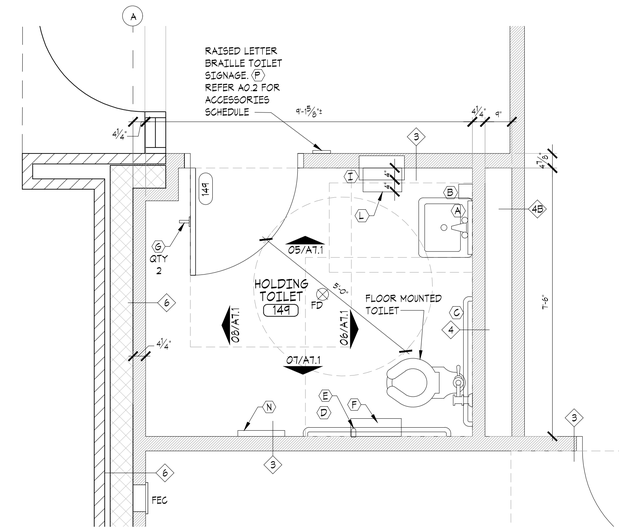

02 ENLARGED PLAN HOLDING TOILET 149
SCALE: 1/2" = 1'-0"

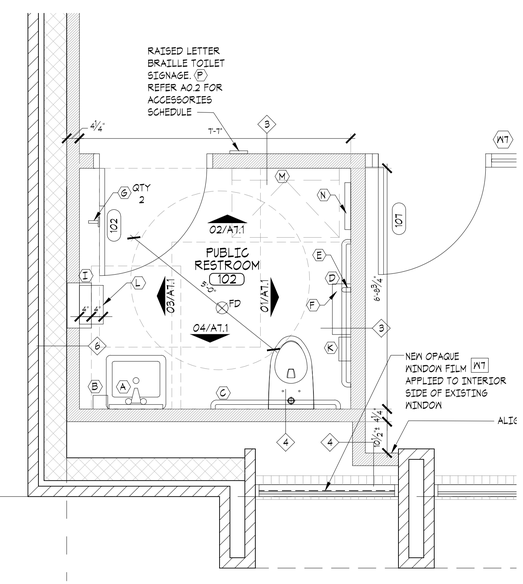

01 ENLARGED PLAN PUBLIC RESTROOM 102
SCALE: 1/2" = 1'-0"

THE MCKINNEY PARTNERSHIP
architects

3600 West Main
Suite 200
Norman, Oklahoma
73072
405.360.1400 p
405.364.8287 f
tmparch.com

Seal:

Project:

City of Norman
Municipal Complex Renovation
Municipal Court
321 N. Webster Avenue
Norman, OK

Issue Date:
11/15/22 ISSUED FOR BIDDING

Revisions:

Project Number:
CM083319

Sheet Title:
ENLARGED PLANS

Sheet Number:
A2.6

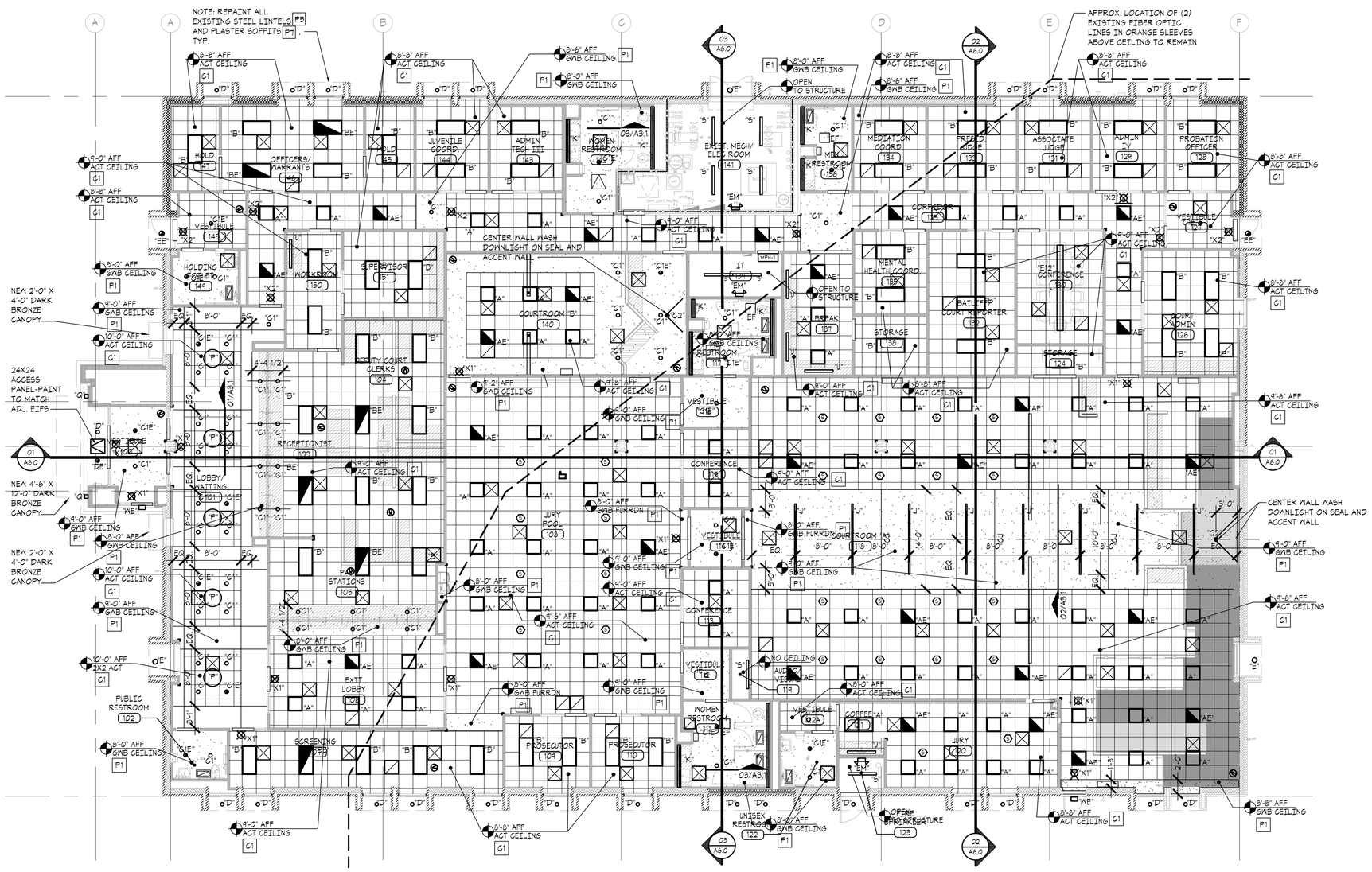

01 REFLECTED CEILING PLAN

SCALE: 1/8" = 1'-0"

REFLECTED CEILING PLAN GENERAL NOTES:

1. REFER ELECTRICAL FOR ALL LIGHTING AND DESIGNATIONS AND TYPES.
2. MEP PLANS SUPERCEDE ARCHITECTURAL PLANS W/ RESPECT TO SPECIFICATION AND WIRING. ARCHITECTURAL PLANS ILLUSTRATE LAYOUT AND ALIGNMENT. ARCHITECTURAL DRAWINGS TAKE PRECEDENCE OVER THE ENGINEERING PLANS FOR THE LOCATION OF ALL ITEMS. REFER ALL RFIs TO ARCHITECT IN WRITING PRIOR TO COMMENCING.
3. ALL LIGHTS, SPRINKLERS, AND MISC. ITEMS TO BE CENTERED IN CEILING PLANE/ CEILING TILE.
4. STRIP FIXTURES TO BE CENTERED IN ROOM IN BOTH DIRECTIONS.
5. VERIFY ALL LIGHTING ROUGH-INS WITH ARCHITECT PRIOR TO DRYWALL INSTALLATION.
6. LIGHT FIXTURES SHOWN HATCHED TO HAVE EMERGENCY OPTION. RE: ELECTRICAL.
7. PROVIDE DAMP RATED FIXTURES AT ALL EXTERIOR AND WET LIGHT FIXTURE LOCATIONS.
8. PAINT ALL DIFFUSERS AND RETURNS IN GWB CEILING TO MATCH ADJACENT CEILING.
9. THE GENERAL CONTRACTOR SHALL PROVIDE FLUSH MOUNTED ACCESS DOORS AS NECESSARY PER CODE FOR ACCESS TO ELECTRICAL AND MECHANICAL EQUIPMENT. IF NOT SPECIFICALLY NOTED ON THE CEILING PLAN, CONFIRM THE PROPOSED LOCATION WITH THE ARCHITECT. PAINT TO MATCH ADJ. CEILING.
10. REFER A9.0 FINISH SCHEDULE FOR FINISHES.
11. ALL EXPOSED STRUCTURE, SUSPENSION WIRE, CONDUIT, DUCTS, UNISTRUT, PIPING SHALL BE PAINTED TO MATCH ADJACENT CEILING, WITH EXCEPTION OF I.T. CABLING, TYPICAL. DO NOT PAINT IT CABLING.
12. CJ = CONSTRUCTION JOINT - CLARK DIETRICH 0HB ZINC CONTROL JOINT OR EQ. - PAINTED TO MATCH CEILING.
13. REFER ELECTRICAL LIGHTING DRAWINGS FOR ADDITIONAL INFORMATION.
14. EXTERIOR LIGHT FIXTURES THAT WERE REMOVED AND NOT REPLACED NEED TO BE PATCHED TO MATCH ADJ. FINISHES.

21

REFLECTED CEILING PLAN LEGEND

"A"	2'x4' RECESSED LED FIXTURE
"AE"	2'x4' RECESSED LED FIXTURE W/ EMERGENCY OPTION
"B"	2'x4' RECESSED LED FIXTURE
"BE"	2'x4' RECESSED LED FIXTURE W/ EMERGENCY OPTION
"C1"	4" RECESSED LED DOWNLIGHT
"C1E"	4" RECESSED LED DOWNLIGHT W/ EMERGENCY OPTION
"C2"	4" RECESSED LED DOWNLIGHT-WALL WASHER
"D"	6" RECESSED EXTERIOR LED DOWNLIGHT
"E"	8" RECESSED EXTERIOR LED DOWNLIGHT
"EE"	8" RECESSED EXTERIOR LED DOWNLIGHT W/ EMERGENCY OPTION
"J"	8' LINEAR RECESSED LED
"K"	WALL MTD. LINEAR DIRECT/INDIRECT LED (REFER PLAN FOR LENGTH)
"E12"	12'-0" LONG PENDANT
"P"	LED PENDANT
"Q"	LED WALL SCONCE
"S"	4' LED STRIP LIGHT
"U"	4' UNDERCABINET LED LIGHT
"X1"	EDGELIT EXIT LIGHT - RECESS INTO GWB CEILING
"X2"	PLASTIC EXIT LIGHT
"EM"	WALL MOUNTED EMERGENCY LIGHT
"WE"	EXTERIOR EMERGENCY WALL PACK LIGHT
	CEILING MOUNTED FIXED DOME CAMERA
	CEILING MOUNTED PROJECTOR
	CEILING MOUNTED LOUDSPEAKER
	CEILING MOUNTED MICROPHONE OUTLET
	CEILING MOUNTED WIRELESS ACCESS POINT
	2'x2' SUPPLY AIR DIFFUSER
	2'x2' RETURN AIR DIFFUSER
	1'x2' SUPPLY AIR DIFFUSER
	1'x2' RETURN AIR DIFFUSER

1

THE MCKINNEY PARTNERSHIP
architects

3600 West Main
Suite 200
Norman, Oklahoma
73072
405.360.1400 p
405.364.8287 f
tmparch.com

Seal:

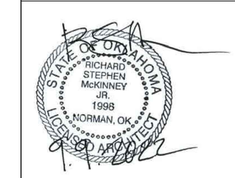

Project:

City of Norman
Municipal Complex Renovation
Municipal Court
321 N. Webster Avenue
Norman, OK

Issue Date:
11/15/22 ISSUED FOR BIDDING

Revisions:

Project Number:
CM083319

Sheet Title:
REFLECTED CEILING PLAN

Sheet Number:
A3.0

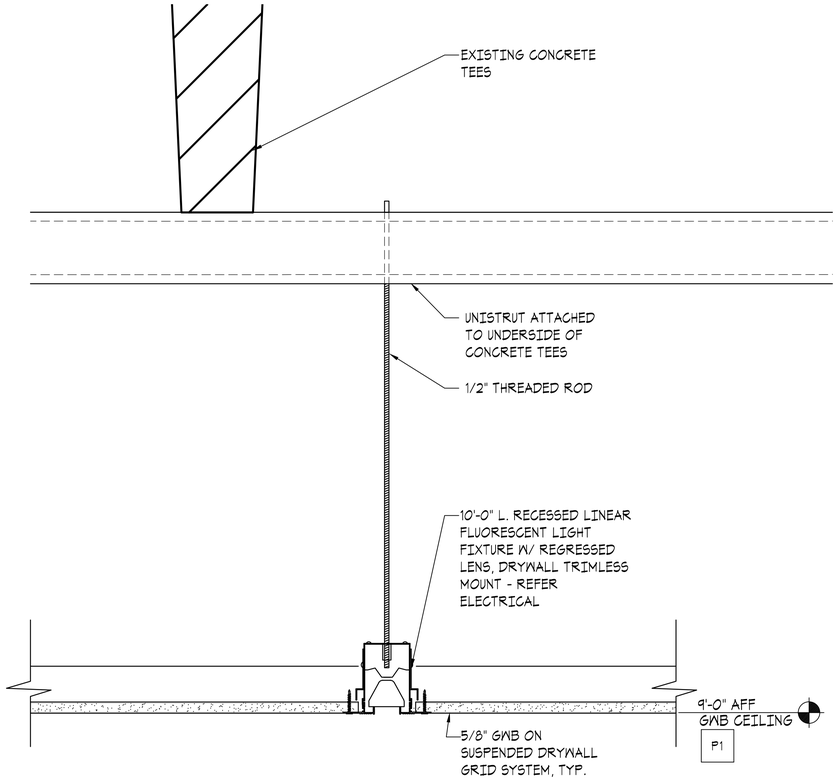

03 LIGHT FIXTURE DETAIL AT COURTROOM 'A'
SCALE: 3" = 1'-0"

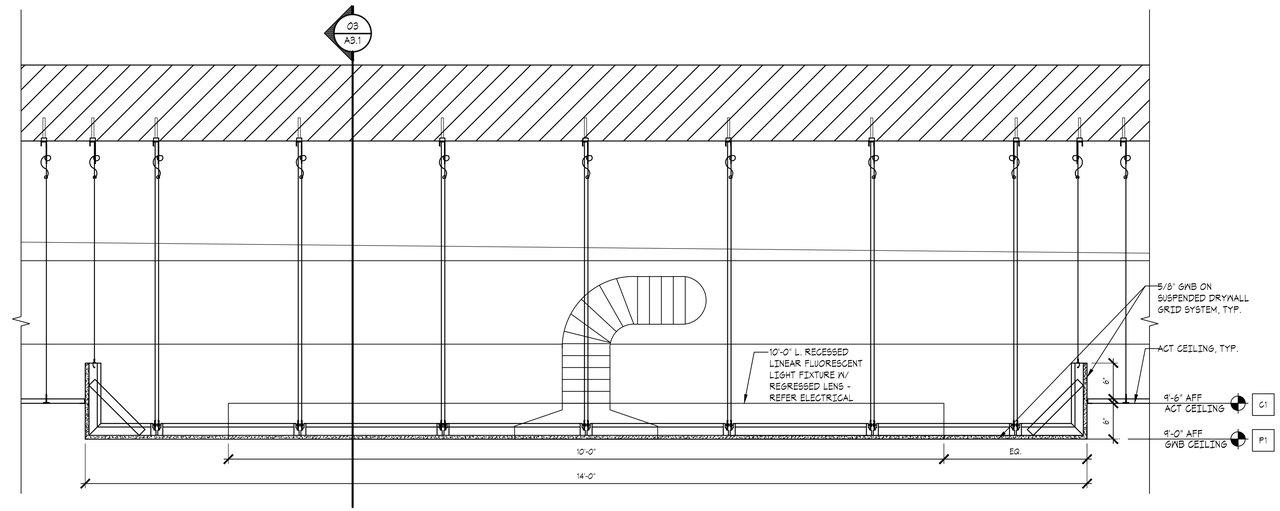

02 FURRDOWN DETAIL AT COURTROOM 'A'
SCALE: 1" = 1'-0"

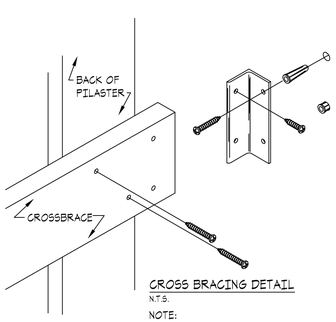

CROSS BRACING DETAIL
N.T.S.

NOTE:
CROSS BRACING TO BE PLACED BEHIND THE PILASTERS AT 82" ABOVE THE FLOOR. INSTALL CROSS BRACING PER MANUFACTURER'S WRITTEN INSTRUCTIONS. GC TO FIELD VERIFY EXISTING CONDITIONS PRIOR TO ORDERING AND INSTALLATION.

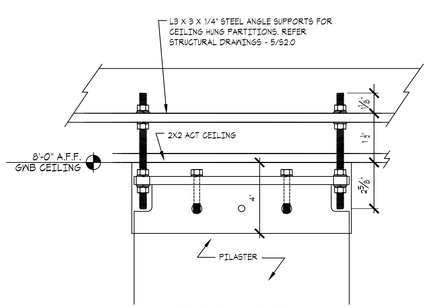

CEILING MOUNT DETAIL

03 TYP. CEILING HUNG PARTITION DETAIL
SCALE: 1 1/2" = 1'-0"

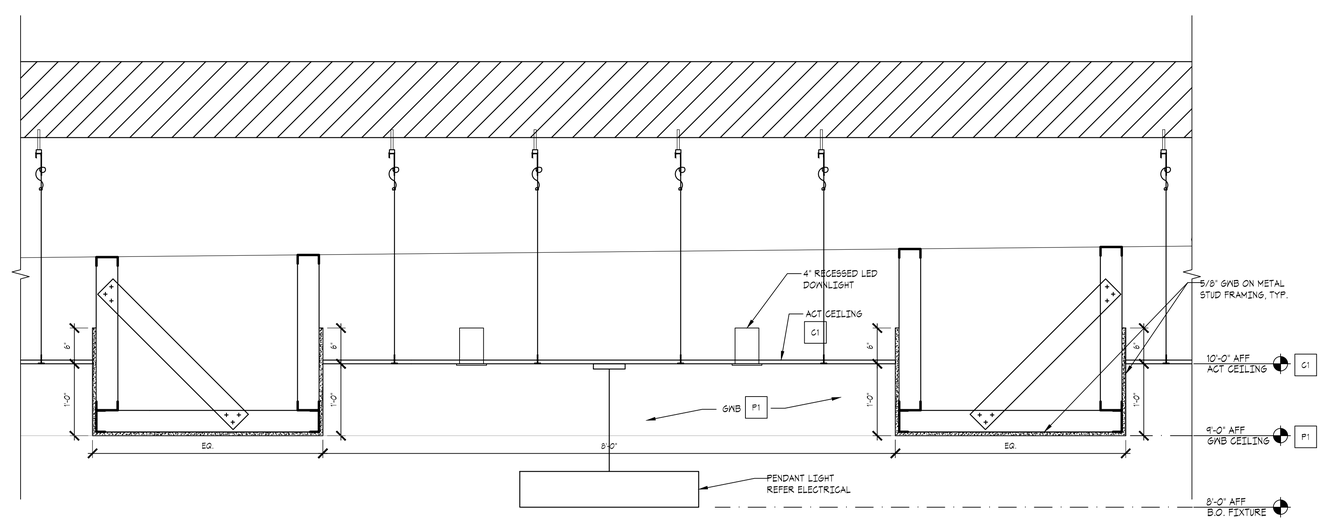

01 FURRDOWN DETAIL AT LOBBY/WAITING
SCALE: 1" = 1'-0"

THE MCKINNEY PARTNERSHIP
architects

3600 West Main
Suite 200
Norman, Oklahoma
73072
405.360.1400 p
405.364.8287 f
tmparch.com

Seal:

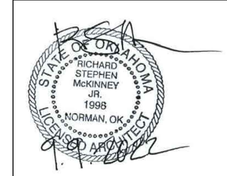

Project:

City of Norman
Municipal Complex Renovation
Municipal Court
321 N. Webster Avenue
Norman, OK

Issue Date:
11/15/22 ISSUED FOR BIDDING

Revisions:

Project Number:
CM083319

Sheet Title:
CEILING DETAILS

Sheet Number:
A3.1

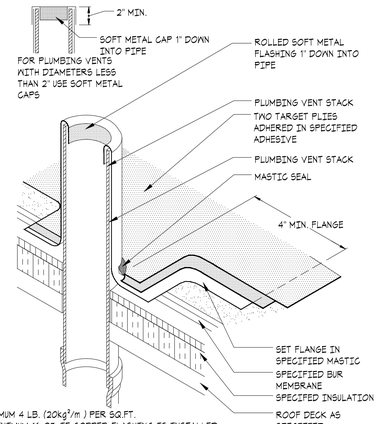

1. SHEET LEAD: MINIMUM 4 LB. ($20kg^2/m$) PER SQ.FT.
2. SHEET COPPER: MINIMUM 16 OZ. IF COPPER FLASHING IS INSTALLED OVER AN IRON OR STEEL PIPE, WRAP AN ASPHALT COATED ROOFING FELT TO PREVENT DIRECT CONTACT BETWEEN TWO DISSIMILAR METALS.

02 VENT FLASHING DETAIL
SCALE: N.T.S

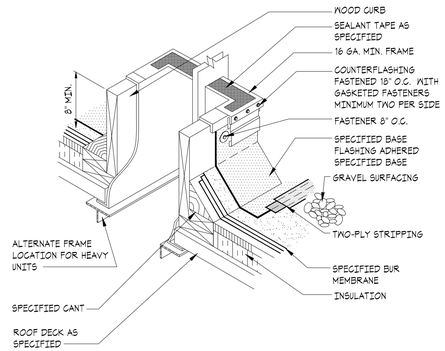

03 GRAVITY HOOD CURB DETAIL
SCALE: N.T.S

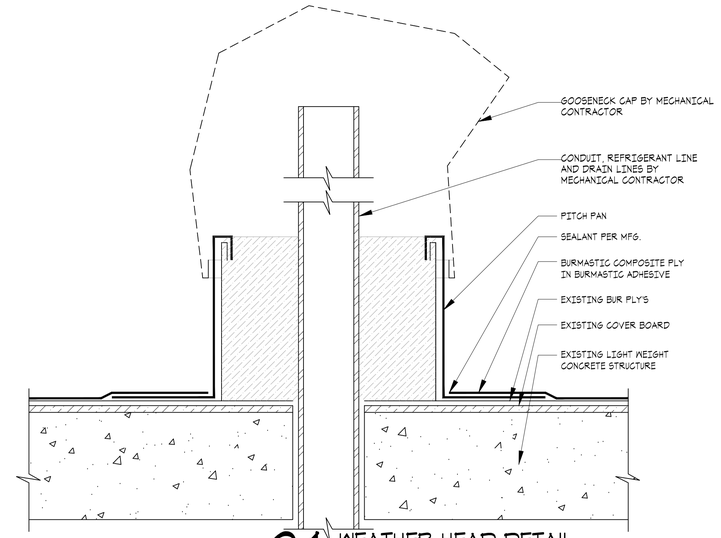

EXISTING ROOF:
TREMCO 3-PLY COLD PROCESSED SYSTEM WITH FLOOD COAT AND GRAVEL BALLAST

REQUIRED ROOFING CONTRACTOR:
NTI TREMCO
JAIME CARTER
304-444-6489
JCarter@tremcoinc.com

NOTE: ALL NEW ROOFING WORK TO BE INSTALLED PER MFG. SPECIFICATIONS TO MAINTAIN EXISTING WARRANTY.

04 WEATHER HEAD DETAIL
SCALE: N.T.S

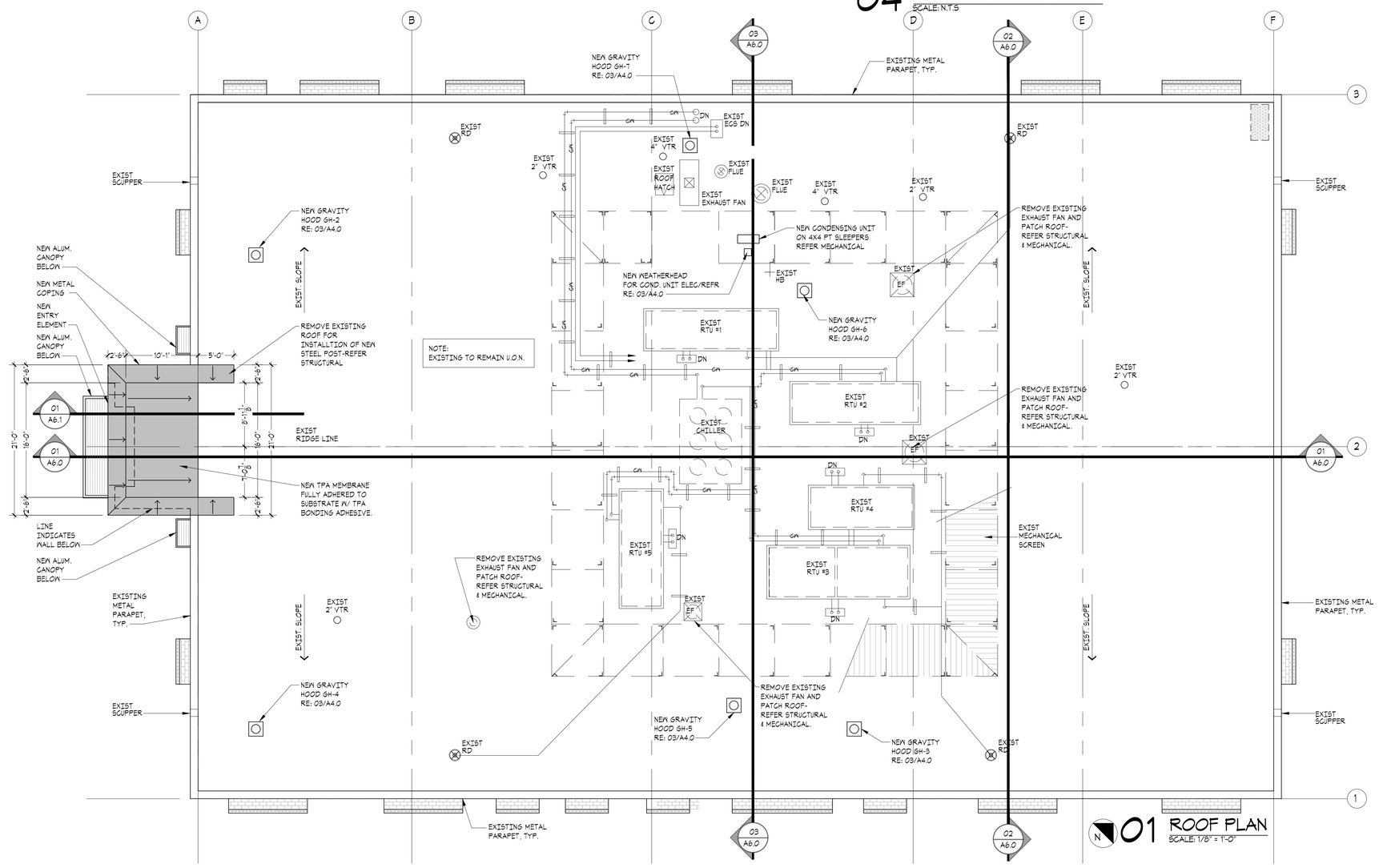

01 ROOF PLAN
SCALE: 1/8" = 1'-0"

THE MCKINNEY PARTNERSHIP
architects
3600 West Main
Suite 200
Norman, Oklahoma
73072
405.360.1400 p
405.364.8287 f
tmparch.com

Seal:

Project:

City of Norman
Municipal Complex Renovation
Municipal Court
321 N. Webster Avenue
Norman, OK

Issue Date:
11/15/22 ISSUED FOR BIDDING

Revisions:

Project Number:
CM083319

Sheet Title:
ROOF PLAN

Sheet Number:
A4.0

GENERAL NOTES:

1. POWER WASH ALL EXISTING MASONRY.

ELEVATION KEY NOTES:

1. PATCH MASONRY WHERE LIGHT FIXTURE AND JBOX WAS REMOVED
2. NEW 4'-0"W X 8'-4"H DARK BRONZE ALUM. FRAME WITH 1" INSULATED LOW E GLASS IN EXISTING MASONRY WALL. TOOTH-IN MASONRY AROUND WINDOWS AS REQUIRED.
3. INFILL EXISTING OPENING WITH SALVAGED MASONRY FROM NEW WEST ENTRY-MATCH MORTAR TINT.
4. REMOVE EXIST. ALUM. WINDOW AND REPLACE WITH NEW 3'-0" X 7'-0" HM DOOR, FRAME & HARDWARE.
5. NEW EIFS ENTRY VESTIBULE. REFER TO SHEET A5.1 FOR ENLARGED ELEVATION
6. NOT USED
7. NEW ALUM. CANOPY OVER NEW WINDOWS
8. NEW 3'-6" X 7'-0" HM DOOR AND HM FRAME IN EXIST. MASONRY WALL-PAINT FINISH 'P5'
9. NEW CONCRETE STEPS AND CONCRETE SIDEWALK
10. EXISTING HM DOOR AND HM FRAME TO RECEIVE NEW PAINT FINISH 'P5'
11. EXISTING METAL BOLLARDS TO RECEIVE NEW PAINT FINISH 'P5'. (QUANTITY OF 3)
12. NEW REMOTE FIRE DEPARTMENT CONNECTION. REFER PLUMBING.
13. NEW WALL MOUNTED EMERGENCY LIGHT FIXTURE REFER ELECTRICAL
14. NEW GENERATOR, ATS & CONCRETE PADS REFER ELECTRICAL
15. NEW WASTE RECEPTACLE (QUANTITY OF 2)
16. NEW DARK BRONZE ANODIZED HANDRAILS
17. ADD OPAQUE WINDOW FILM (N7) TO INTERIOR OF GLASS
18. NEW BIKE RACKS
19. FIRE SPRINKLER RISER SIGN - MOUNT PER ACCESSORIES MOUNTING SCHEDULE ON SHEET A0.2
20. REPAINT ALL EXISTING BRICK LINTELS 'P8' AND PLASTER SOFFITS 'P1'
21. NOT USED
22. 6" STEEL BOLLARD W/ DOMED PLASTIC COVER (QUANTITY OF 4)
23. NEW RAMP W/ 1 1/2" DIA. DARK BRONZE ANODIZED HANDRAILS ON EA. SIDE. RE: 02/A5.1. THICKEN SLAB WHERE HANDRAIL IS EMBEDDED

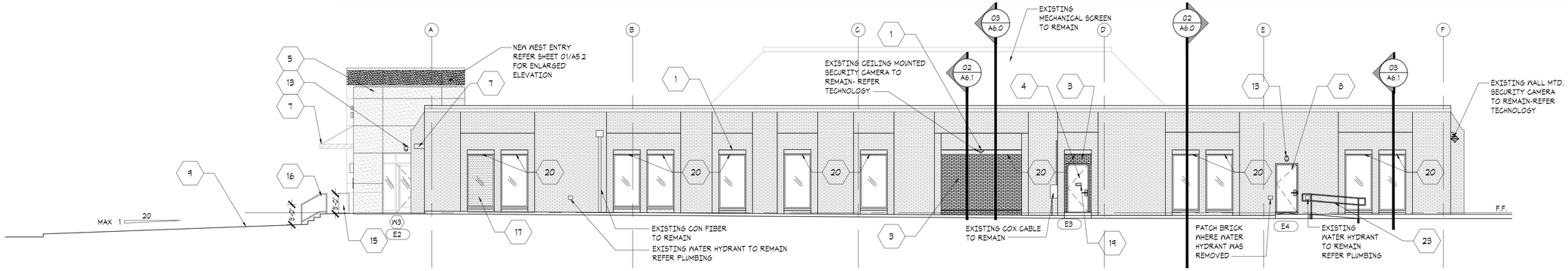

04 SOUTH ELEVATION
SCALE: 1/8" = 1'-0"

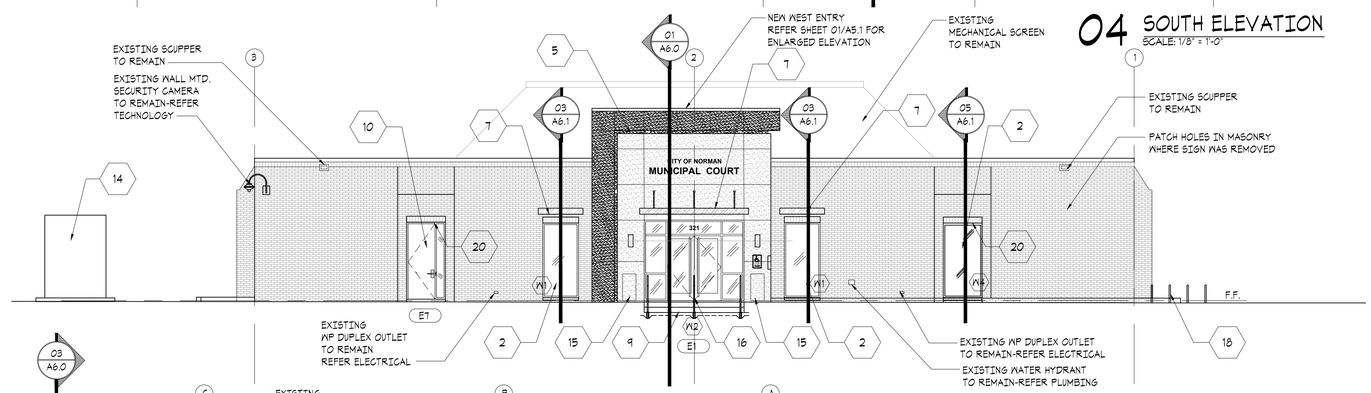

03 WEST ELEVATION
SCALE: 1/8" = 1'-0"

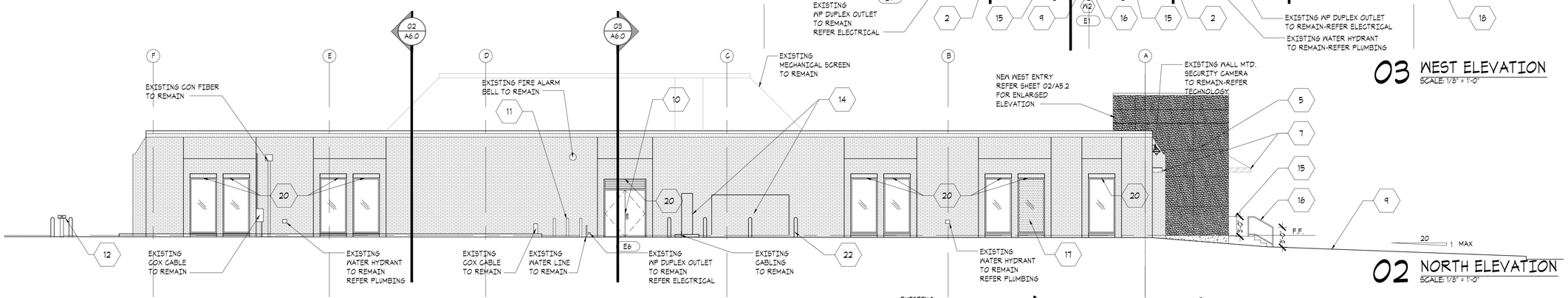

02 NORTH ELEVATION
SCALE: 1/8" = 1'-0"

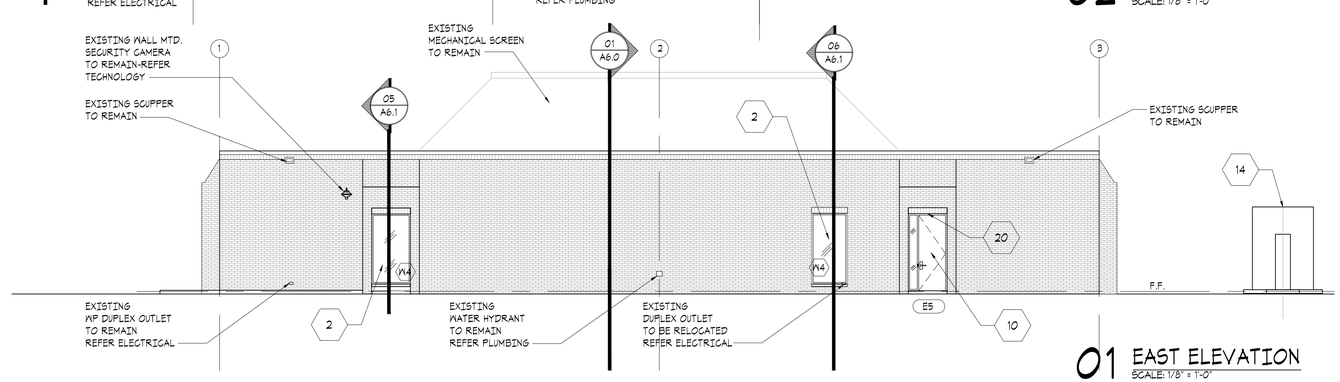

01 EAST ELEVATION
SCALE: 1/8" = 1'-0"

THE MCKINNEY PARTNERSHIP
architects

3600 West Main
Suite 200
Norman, Oklahoma
73072
405.360.1400 p
405.364.8287 f
tmparch.com

Copyright © 2008 The McKinney Partnership Architects, P.C., All Rights Reserved

Seal:

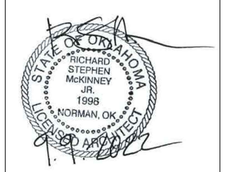

Project:

City of Norman
Municipal Complex Renovation
Municipal Court
321 N. Webster Avenue
Norman, OK

Issue Date:
11/15/22 ISSUED FOR BIDDING

Revisions:

Project Number:
CM083319

Sheet Title:
EXTERIOR ELEVATIONS

Sheet Number:
A5.0

03 EIFS JOINT DETAIL
SCALE: FULL SCALE

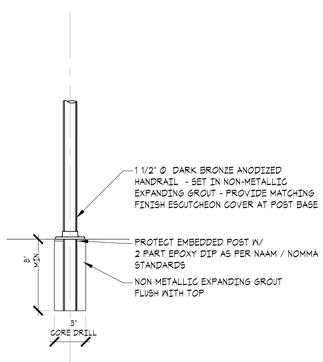

02 HANDRAIL POST DETAIL
SCALE: 1 1/2" = 1'-0"

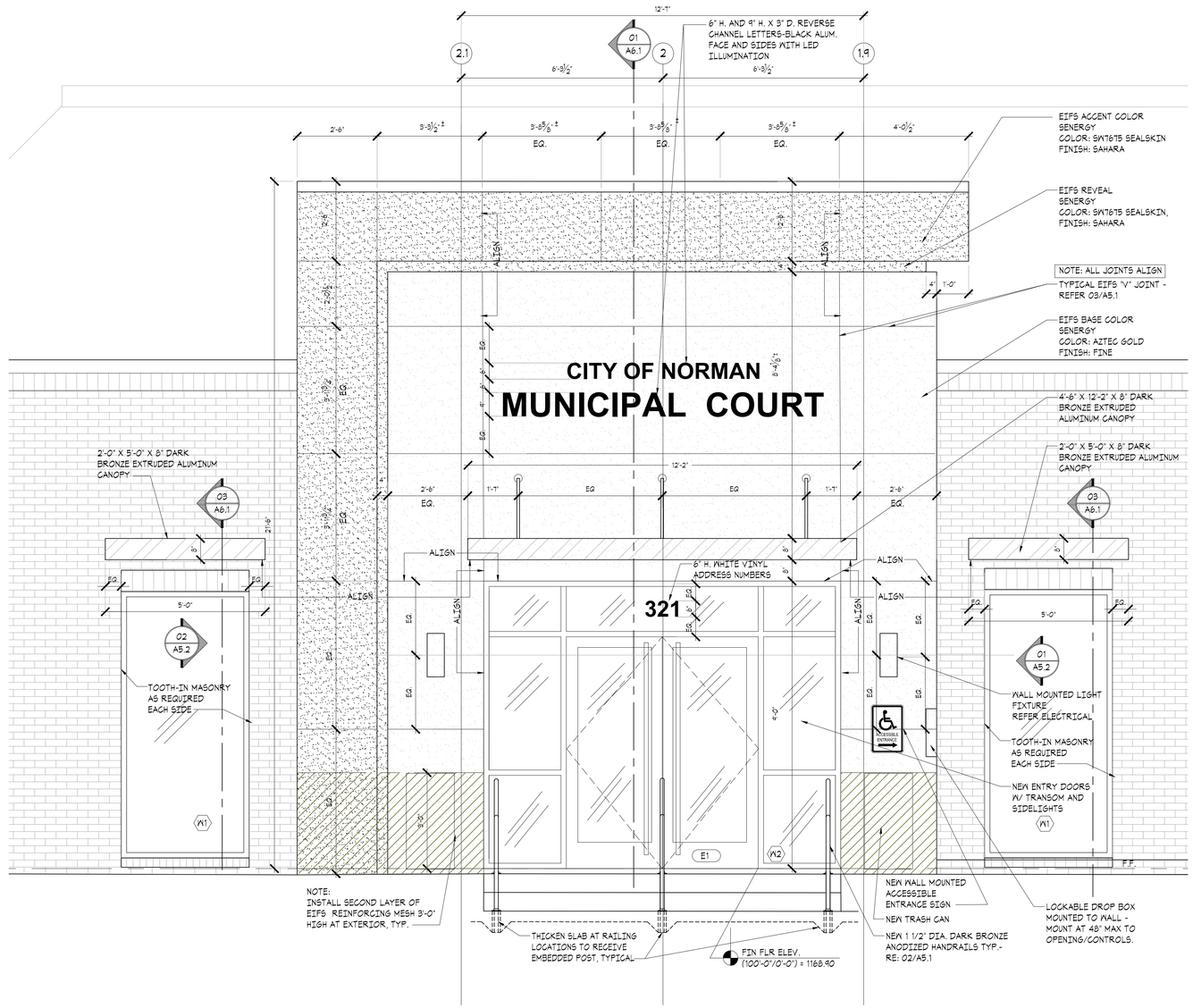

01 ENLARGED ENTRY ELEVATION
SCALE: 1/2" = 1'-0"

THE MCKINNEY PARTNERSHIP
architects

3600 West Main
Suite 200
Norman, Oklahoma
73072
405.360.1400 p
405.364.8287 f
tmparch.com

Copyright © 2008 The McKinney Partnership Architects, P.C., All Rights Reserved

Seal:

Project:

City of Norman
Municipal Complex Renovation
Municipal Court
321 N. Webster Avenue
Norman, OK

Issue Date:
11/15/22 ISSUED FOR BIDDING

Revisions:

Project Number:
CM083319

Sheet Title:
ENLARGED EXTERIOR ELEVATION

Sheet Number:
A5.1

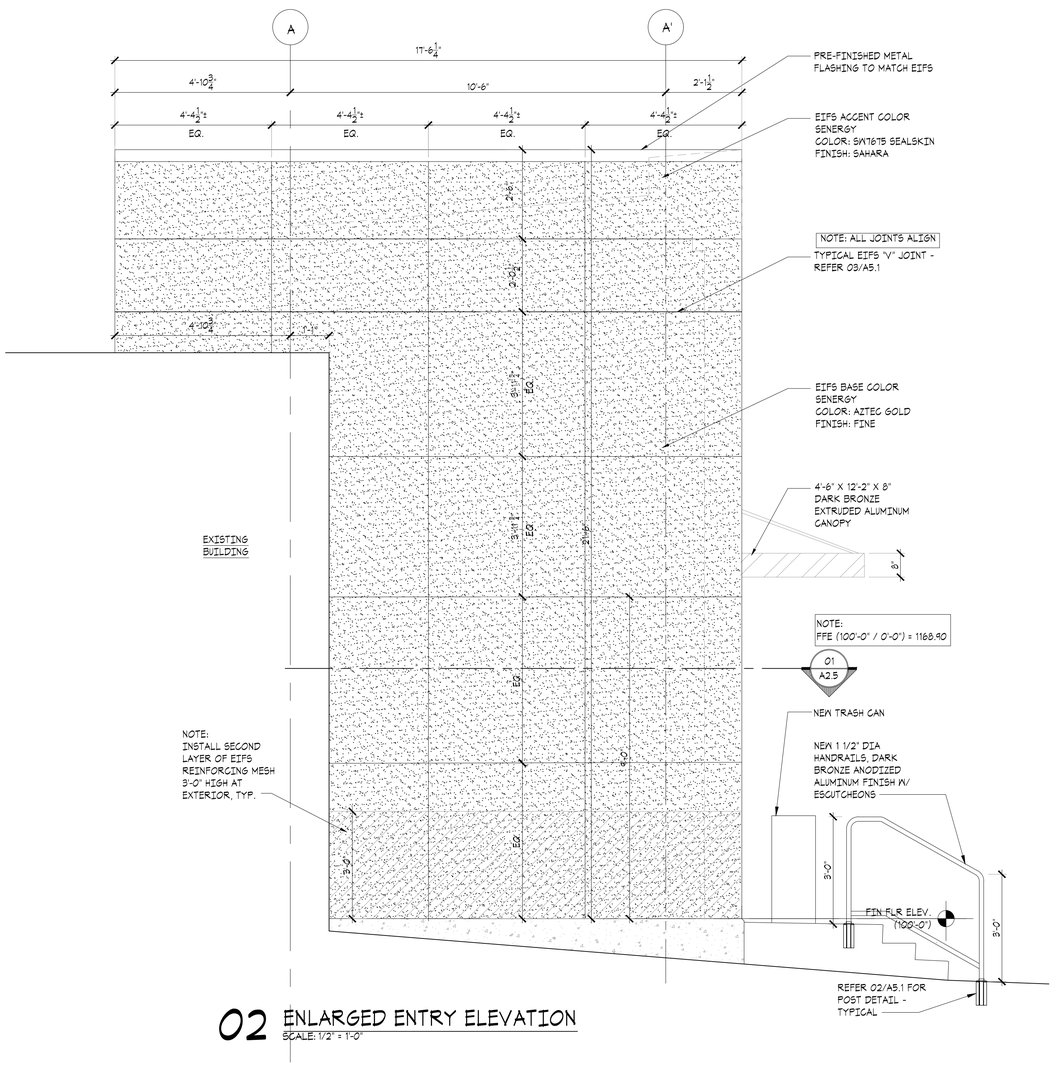

02 ENLARGED ENTRY ELEVATION
SCALE: 1/2" = 1'-0"

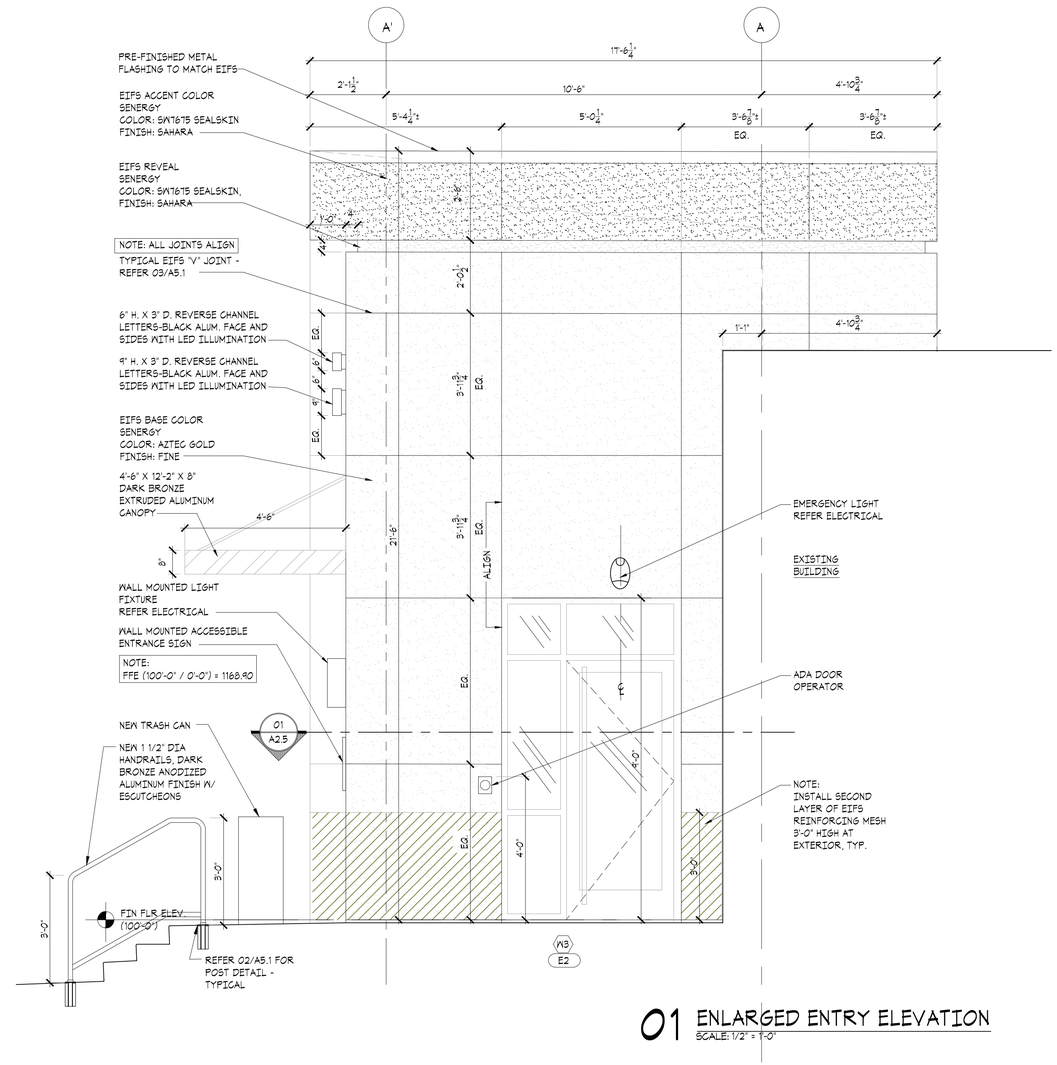

01 ENLARGED ENTRY ELEVATION
SCALE: 1/2" = 1'-0"

THE MCKINNEY PARTNERSHIP
architects

3600 West Main
Suite 200
Norman, Oklahoma
73072
405.360.1400 p
405.364.8287 f
tmparch.com

Copyright © 2008 The McKinney Partnership Architects, P.C., All Rights Reserved

Seal:

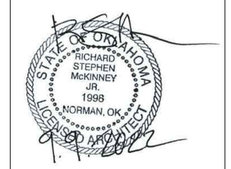

Project:

City of Norman
Municipal Complex Renovation
Municipal Court
321 N. Webster Avenue
Norman, OK

Issue Date:
11/15/22 ISSUED FOR BIDDING

Revisions:

Project Number:
CM083319

Sheet Title:
ENLARGED EXTERIOR ELEVATIONS

Sheet Number:
A5.2

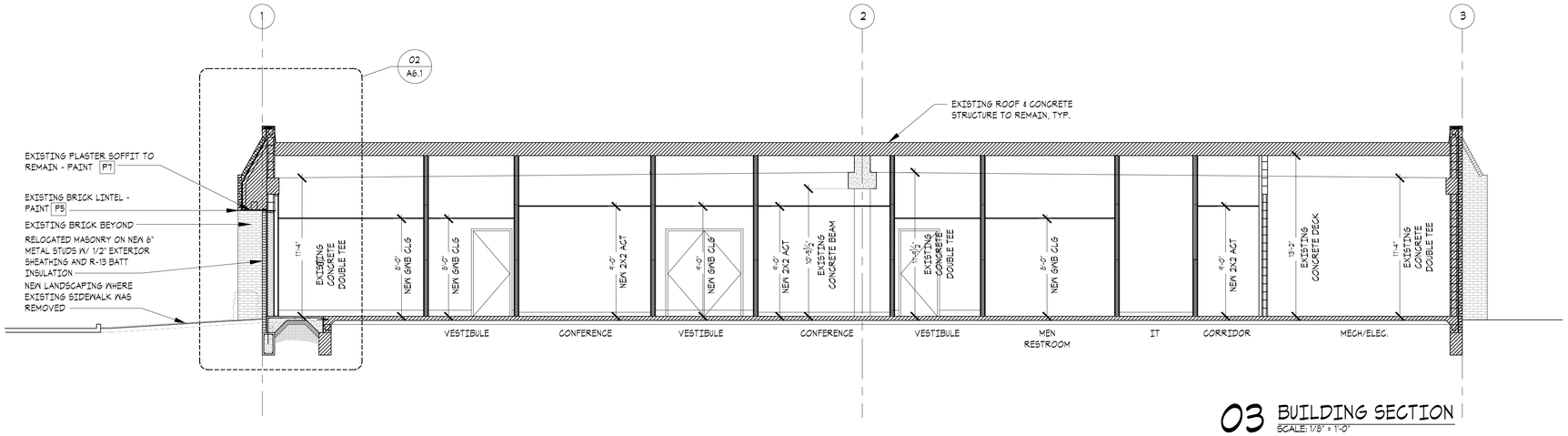

03 BUILDING SECTION
SCALE: 1/8" = 1'-0"

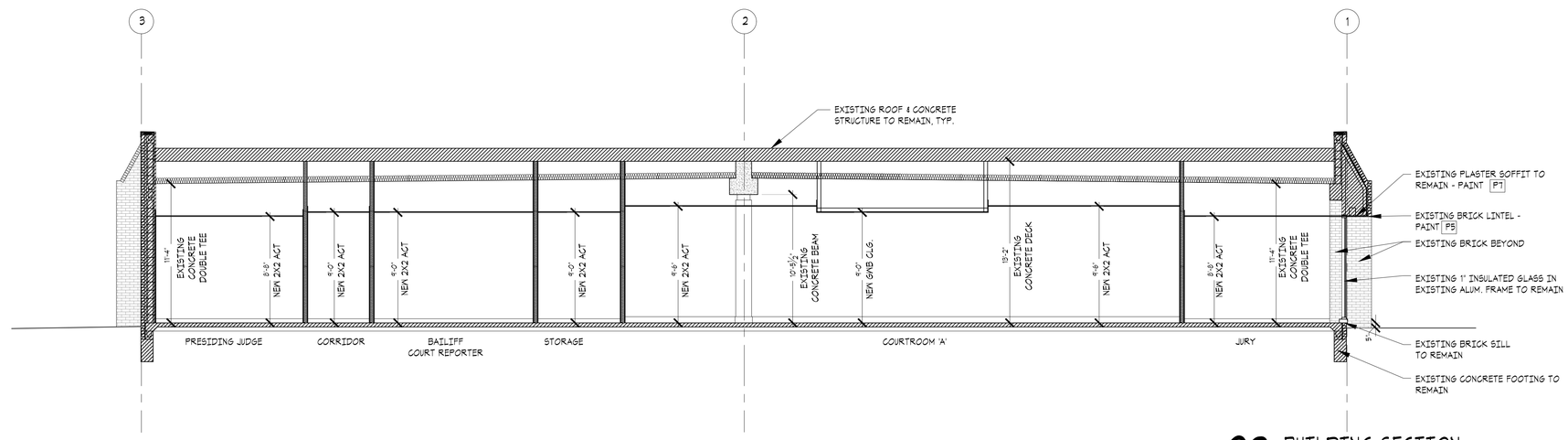

02 BUILDING SECTION
SCALE: 1/8" = 1'-0"

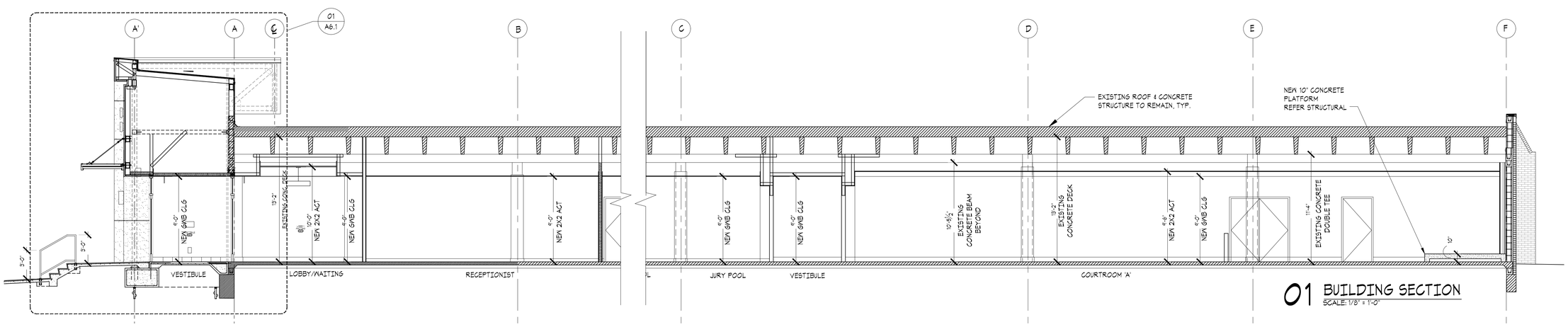

01 BUILDING SECTION
SCALE: 1/8" = 1'-0"

THE MCKINNEY PARTNERSHIP
architects

3600 West Main
Suite 200
Norman, Oklahoma
73072
405.360.1400 p
405.364.8287 f
tmparch.com

Seal:

STATE OF OKLAHOMA
RICHARD STEPHEN McKINNEY JR.
1998
NORMAN, OK
LICENSED ARCHITECT

Project:

City of Norman
Municipal Complex Renovation
Municipal Court
321 N. Webster Avenue
Norman, OK

Issue Date:
11/15/22 ISSUED FOR BIDDING

Revisions:

Project Number:
CM083319

Sheet Title:
BUILDING SECTIONS

Sheet Number:
A6.0

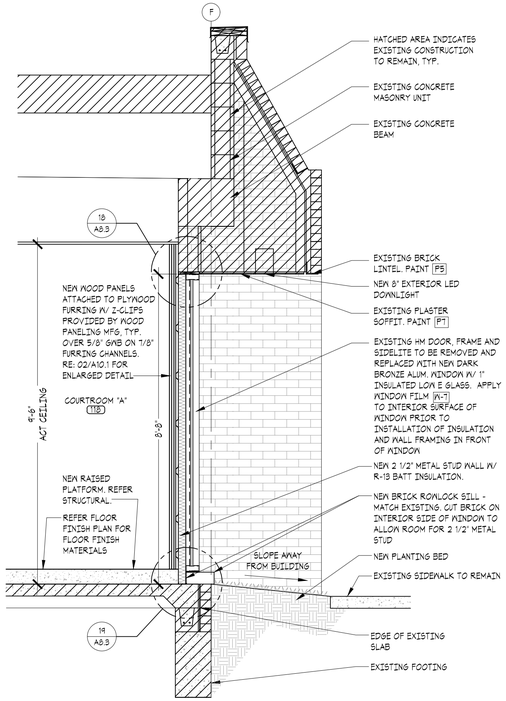

04 SECTION @ NEW WINDOW & INFILL

SCALE: 1/2" = 1'-0" W4' @ COURTROOM 'A' 118

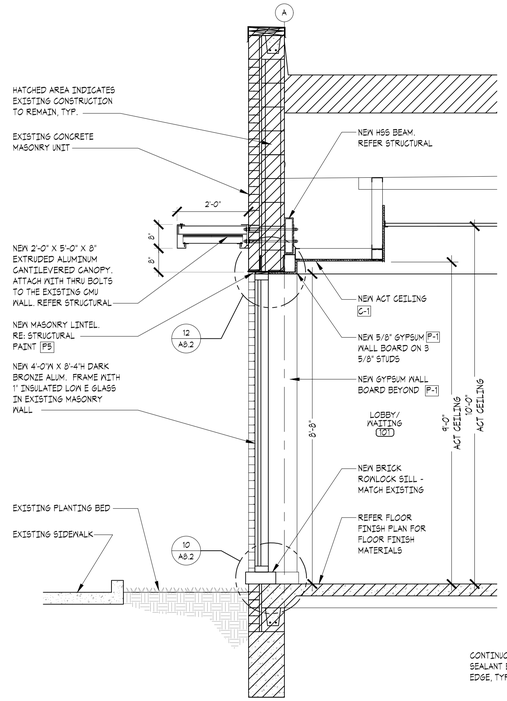

03 SECTION @ NEW WINDOW

SCALE: 1/2" = 1'-0" W1' @ LOBBY/WAITING 101

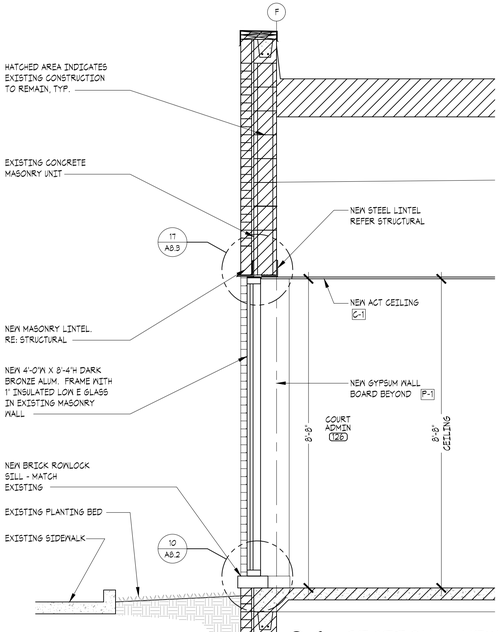

06 SECTION @ NEW WINDOW

SCALE: 1/2" = 1'-0" W4' @ COURT ADMIN 126

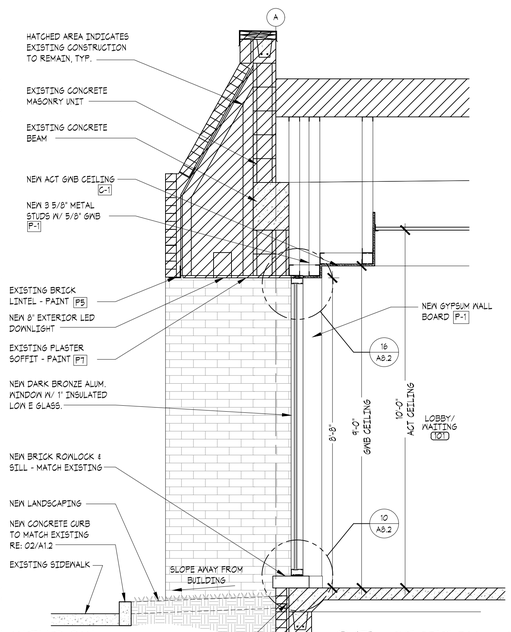

05 SECTION @ NEW WINDOW

SCALE: 1/2" = 1'-0" W4' @ LOBBY/WAITING 101

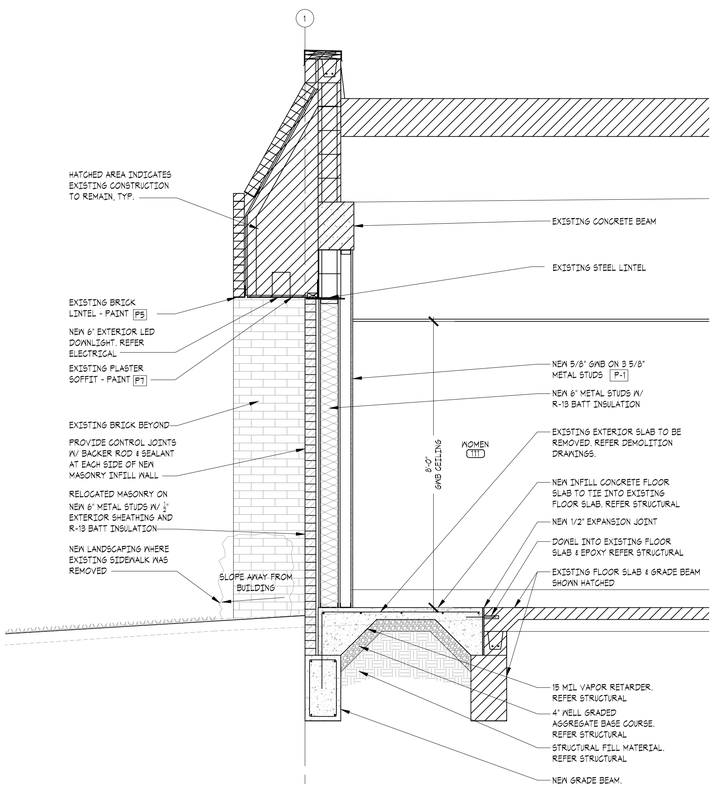

02 SECTION @ INFILL WALL

SCALE: 1/2" = 1'-0"

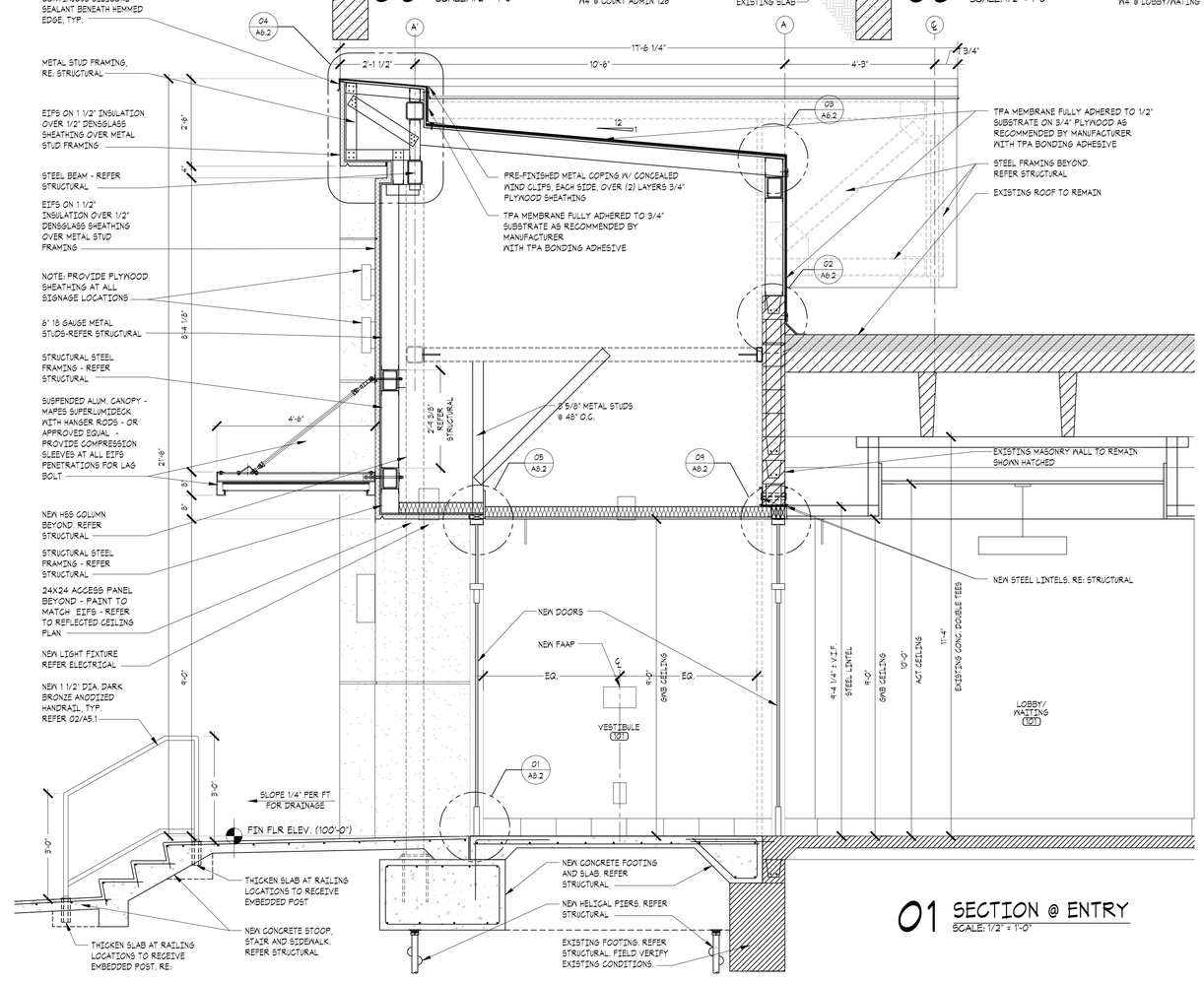

01 SECTION @ ENTRY

SCALE: 1/2" = 1'-0"

THE MCKINNEY PARTNERSHIP
architects

3600 West Main
Suite 200
Norman, Oklahoma
73072
405.360.1400 p
405.364.8287 f
tmparch.com

Seal:

Project:

City of Norman
Municipal Complex Renovation
Municipal Court
321 N. Webster Avenue
Norman, OK

Issue Date:
11/15/22 ISSUED FOR BIDDING

Revisions:

Project Number:
CM083319

Sheet Title:
WALL SECTIONS / DETAILS

Sheet Number:
A6.1

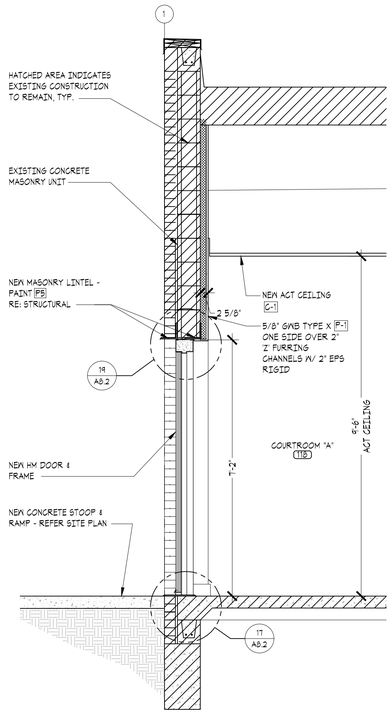

08 SECTION @ NEW DOOR 'E4'
SCALE: 1/2" = 1'-0"

NOTE:
1. EXISTING ROOF TO REMAIN UNLESS OTHERWISE NOTED.
2. ALL ROOF WORK TO BE COORDINATED W/ REQUIRED ROOFING CONTRACTOR.

EXISTING ROOF:
TREMCO 3-PLY GOLD PROCESSED SYSTEM WITH FLOOD COAT AND GRAVEL BALLAST

REQUIRED ROOFING CONTRACTOR:
WTI TREMCO
JAMIE CARTER
304-444-6484
JCarter@tremcoinc.com

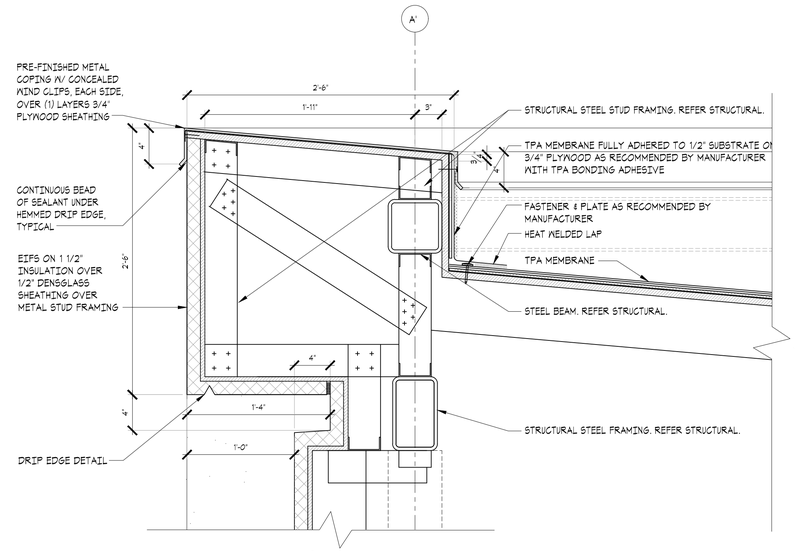

04 ENTRY ELEMENT DETAIL
SCALE: 1 1/2" = 1'-0"

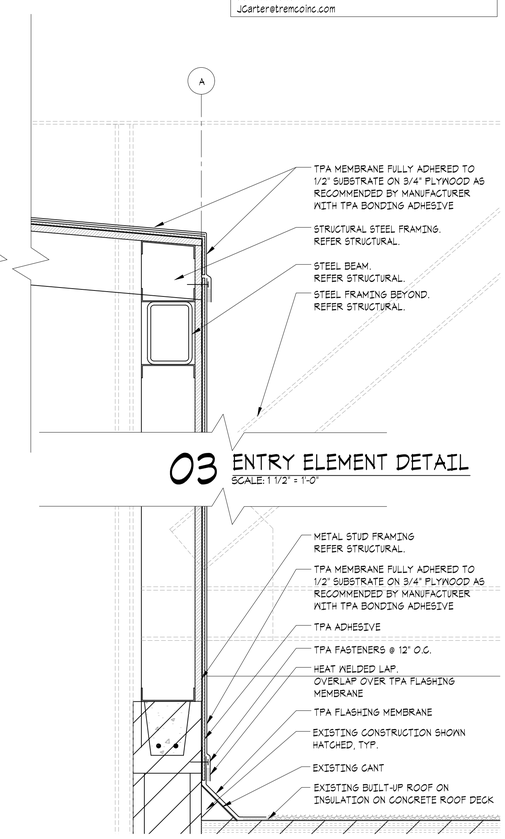

03 ENTRY ELEMENT DETAIL
SCALE: 1 1/2" = 1'-0"

02 ENTRY ELEMENT DETAIL
SCALE: 1 1/2" = 1'-0"

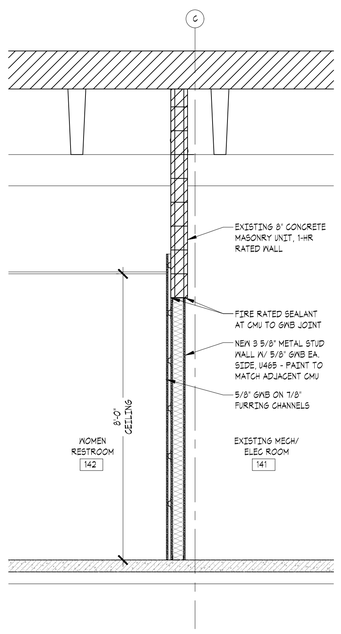

07 SECTION @ EXISTING 1-HR WALL INFILL
SCALE: 1/2" = 1'-0"

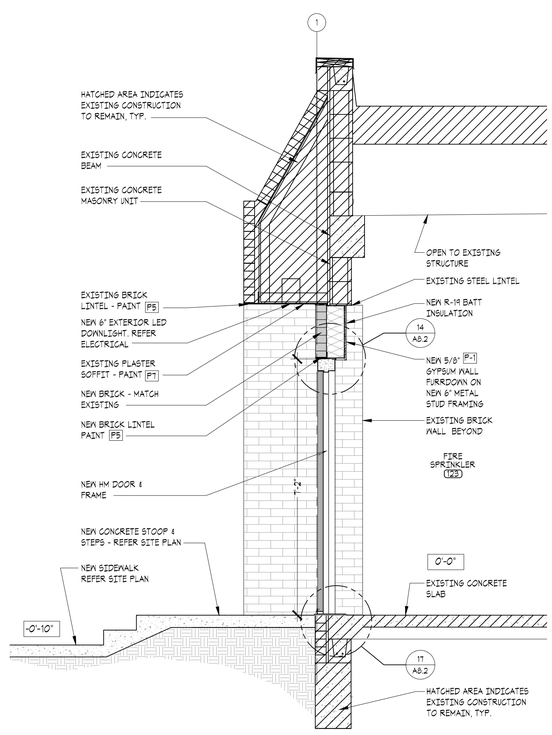

06 SECTION @ NEW DOOR "E3"
SCALE: 1/2" = 1'-0"

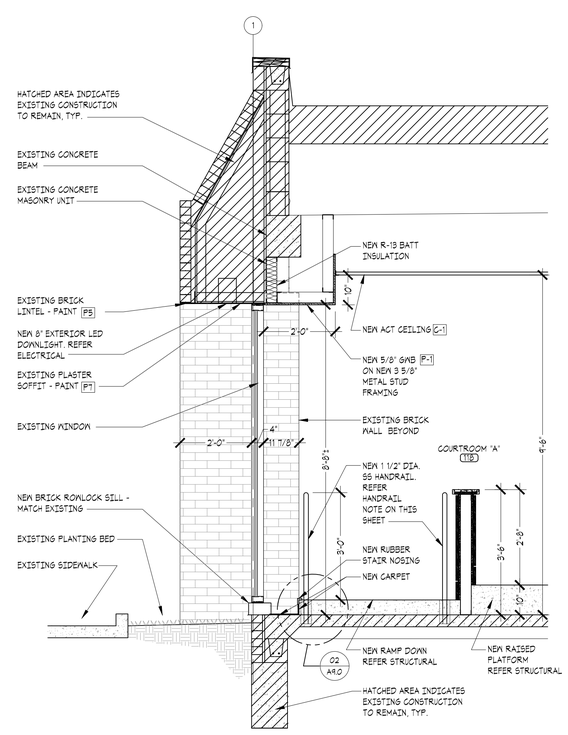

05 SECTION @ EXISTING WINDOW
SCALE: 1/2" = 1'-0"

NOTE:
FOR ALL INTERIOR HANDRAILS SHOWN ATTACHED DIRECTLY TO THE SLAB:

1. PROTECT EMBEDDED POST W/ 2 PART EPOXY DIP AS PER NAAM / NOMMA STANDARDS.
2. USE NON METALLIC EXPANDING GROUT FLUSH WITH TOP OF SLAB.
3. WHERE HANDRAILS ARE SHOWN ATTACHED TO EXISTING SLAB, CORE DRILL & REMOVE EXISTING SLAB AND REPOUR 3' W. X 8'D. CONCRETE PIER FOR HANDRAIL TO BE EMBEDDED.
4. REFER SIMILAR DETAIL 02/A5.1.
5. INTERIOR HANDRAILS WILL NOT HAVE ESCUTCHEON COVERS AT POST BASE. INSTALL FLOORING TIGHTLY AROUND POST SO THERE ARE NOT GAPS.

01 NOT USED
SCALE: 1 1/2" = 1'-0"

THE MCKINNEY PARTNERSHIP
architects

3600 West Main
Suite 200
Norman, Oklahoma
73072
405.360.1400 p
405.364.8287 f
tmparch.com

Seal:

Project:

City of Norman
Municipal Complex Renovation
Municipal Court
321 N. Webster Avenue
Norman, OK

Issue Date:
11/15/22 ISSUED FOR BIDDING

Revisions:

Project Number:
CM083319

Sheet Title:
DETAILS

Sheet Number:
A6.2

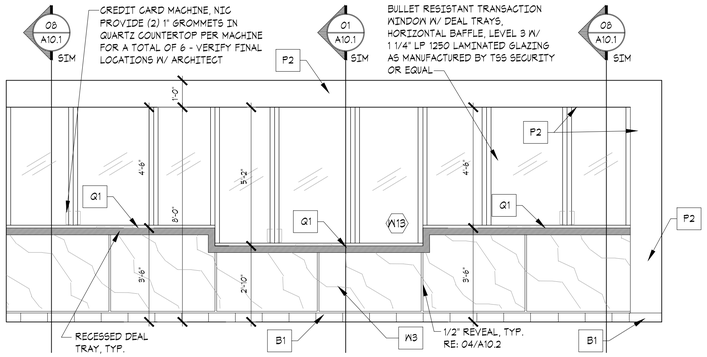

11 EXIT LOBBY 106
SCALE: 3/8" = 1'-0"

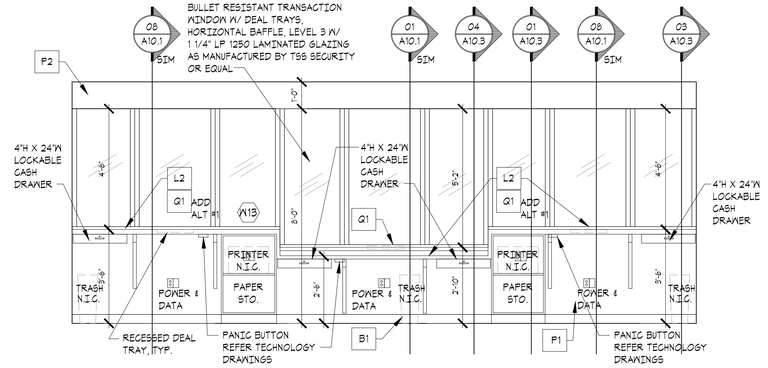

10 PAY STATIONS 105
SCALE: 3/8" = 1'-0"

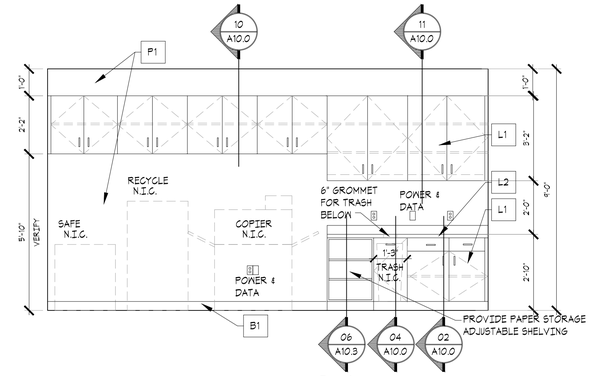

09 WORKROOM 150
SCALE: 3/8" = 1'-0"

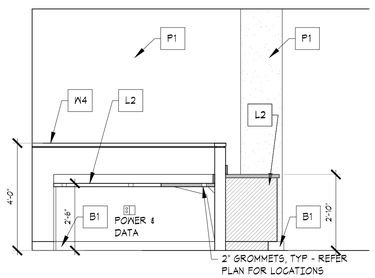

08 RECEPTIONIST 103
SCALE: 3/8" = 1'-0"

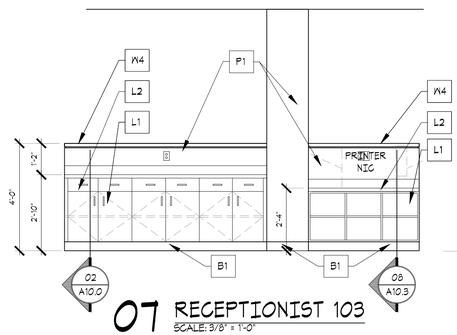

07 RECEPTIONIST 103
SCALE: 3/8" = 1'-0"

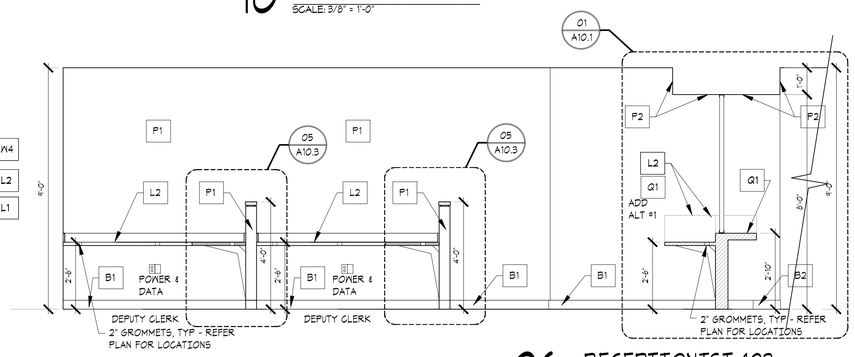

06 RECEPTIONIST 103
SCALE: 3/8" = 1'-0"

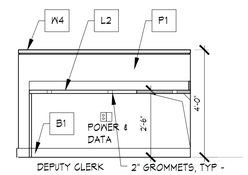

05 RECEPTIONIST 103
SCALE: 3/8" = 1'-0"

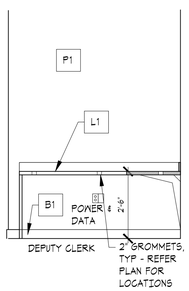

04 RECEPTIONIST 103
SCALE: 3/8" = 1'-0"

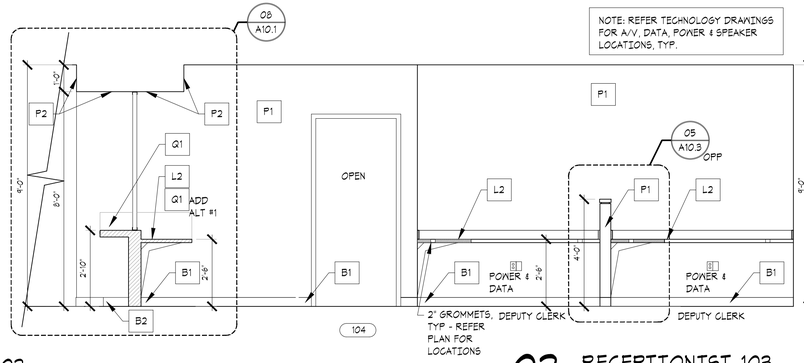

03 RECEPTIONIST 103
SCALE: 3/8" = 1'-0"

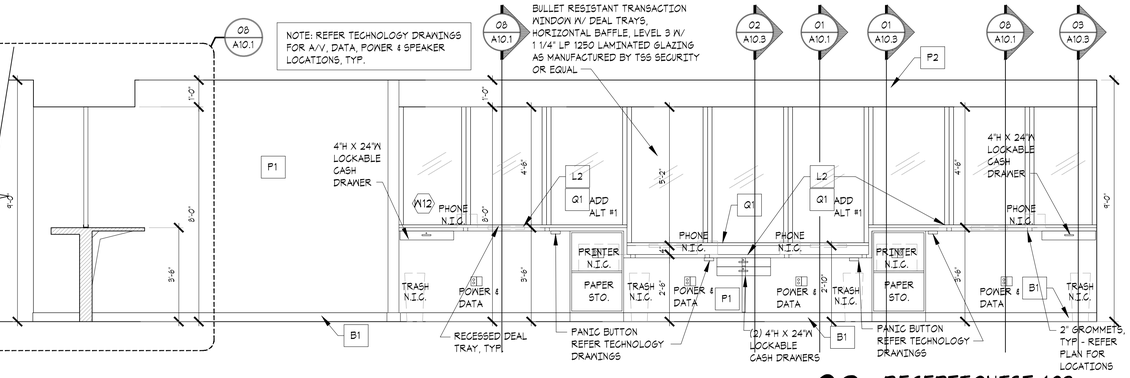

02 RECEPTIONIST 103
SCALE: 3/8" = 1'-0"

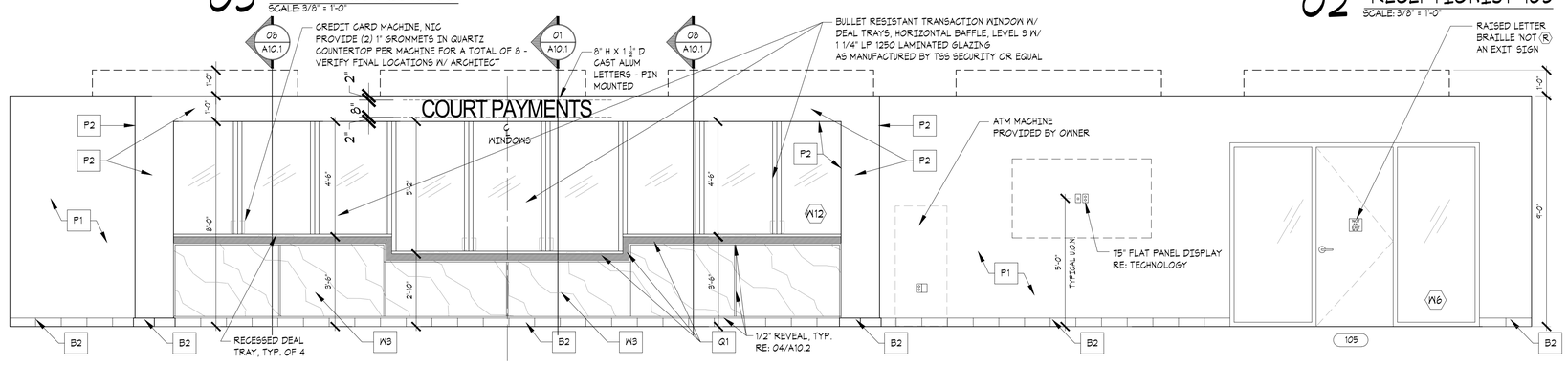

01 LOBBY/WAITING 101
SCALE: 3/8" = 1'-0"

THE MCKINNEY PARTNERSHIP
architects
3600 West Main
Suite 200
Norman, Oklahoma
73072
405.360.1400 p
405.364.8287 f
tmparch.com

Seal:

Project:

City of Norman
Municipal Complex Renovation
Municipal Court
321 N. Webster Avenue
Norman, OK

Issue Date:
11/15/22 ISSUED FOR BIDDING

Revisions:

Project Number:
CM083319

Sheet Title:
INTERIOR ELEVATIONS

Sheet Number:
A7.0

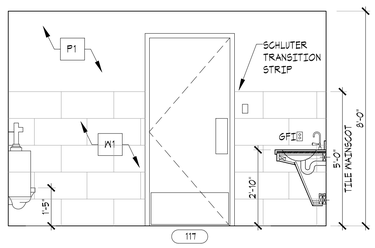

18 MEN RR 117
SCALE: 3/8" = 1'-0"

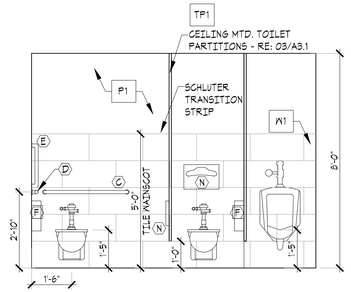

17 MEN RR 117
SCALE: 3/8" = 1'-0"

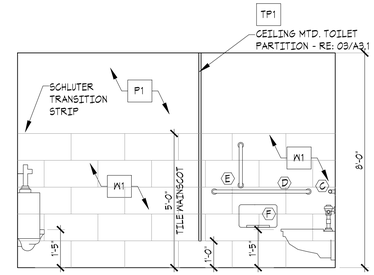

16 MEN RR 117
SCALE: 3/8" = 1'-0"

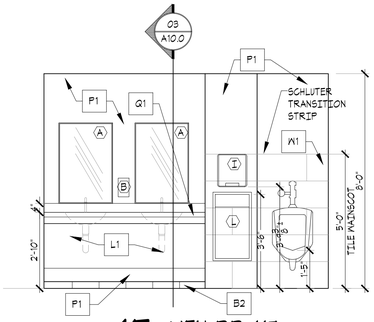

15 MEN RR 117
SCALE: 3/8" = 1'-0"

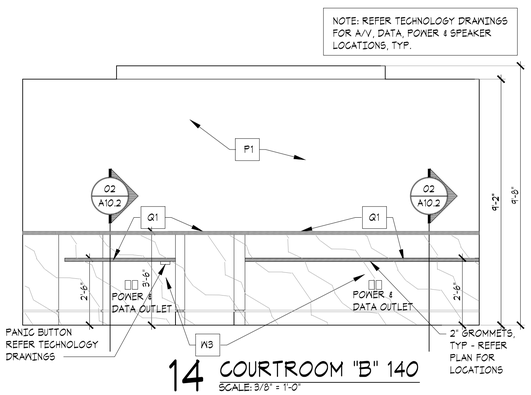

14 COURTROOM "B" 140
SCALE: 3/8" = 1'-0"

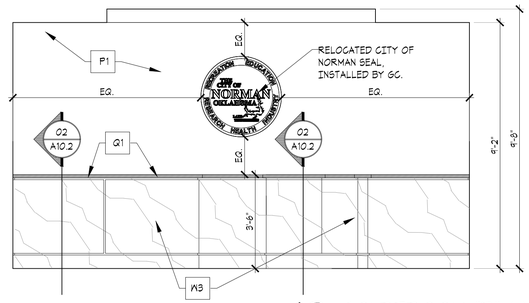

13 COURTROOM "B" 140
SCALE: 3/8" = 1'-0"

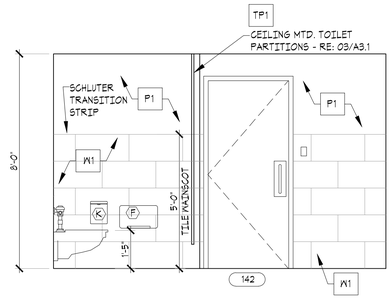

12 WOMENS RR 142
SCALE: 3/8" = 1'-0"

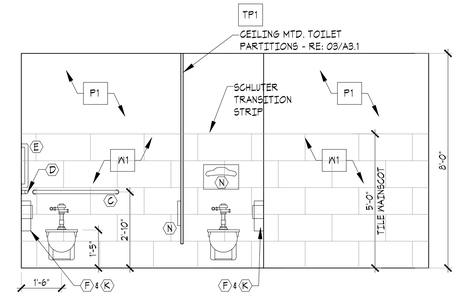

11 WOMENS RR 142
SCALE: 3/8" = 1'-0"

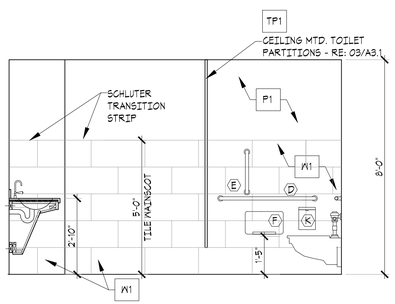

10 WOMENS RR 142
SCALE: 3/8" = 1'-0"

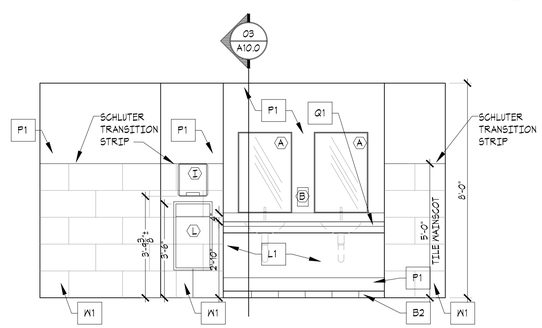

09 WOMENS RR 142
SCALE: 3/8" = 1'-0"

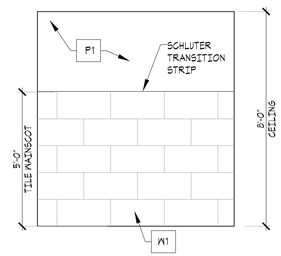

08 HOLDING TOILET 149
SCALE: 3/8" = 1'-0"

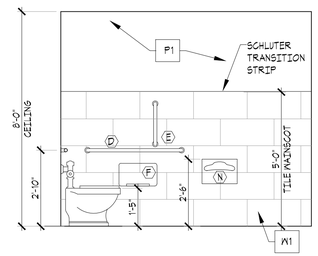

07 HOLDING TOILET 149
SCALE: 3/8" = 1'-0"

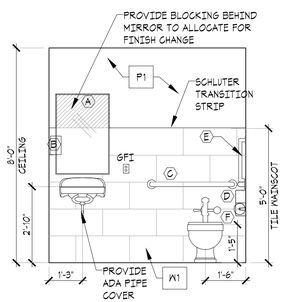

06 HOLDING TOILET 149
SCALE: 3/8" = 1'-0"

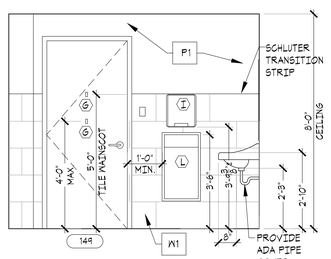

05 HOLDING TOILET 149
SCALE: 3/8" = 1'-0"

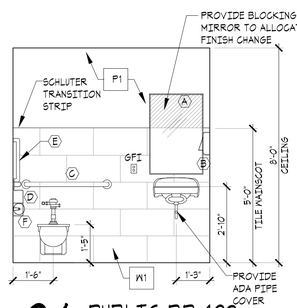

04 PUBLIC RR 102
SCALE: 3/8" = 1'-0"

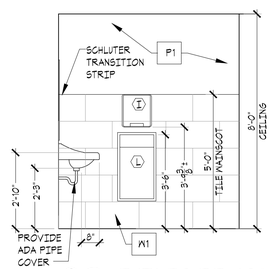

03 PUBLIC RR 102
SCALE: 3/8" = 1'-0"

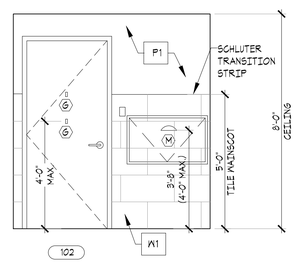

02 PUBLIC RR 102
SCALE: 3/8" = 1'-0"

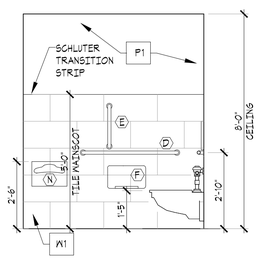

01 PUBLIC RR 102
SCALE: 3/8" = 1'-0"

THE MCKINNEY PARTNERSHIP
architects

3600 West Main
Suite 200
Norman, Oklahoma
73072
405.360.1400 p
405.364.8287 f
tmparch.com

Seal:

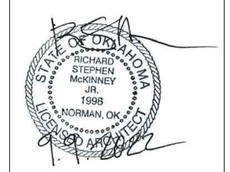

Project:

City of Norman
Municipal Complex Renovation
Municipal Court
321 N. Webster Avenue
Norman, OK

Issue Date:
11/15/22 ISSUED FOR BIDDING

Revisions:

Project Number:
CM083319

Sheet Title:
INTERIOR ELEVATIONS

Sheet Number:
A7.1

Copyright © 2008 The McKinney Partnership Architects

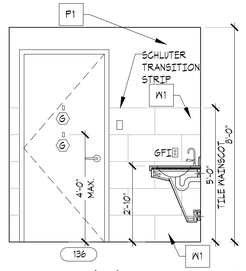

14 MEN RR 136
SCALE: 3/8" = 1'-0"

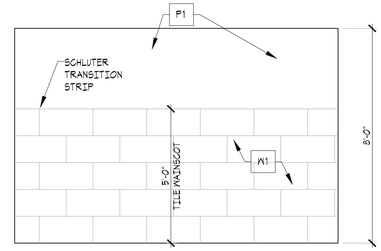

13 MEN RR 136
SCALE: 3/8" = 1'-0"

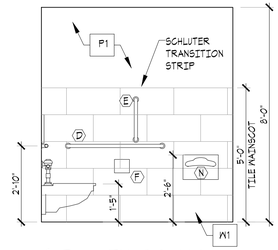

12 MEN RR 136
SCALE: 3/8" = 1'-0"

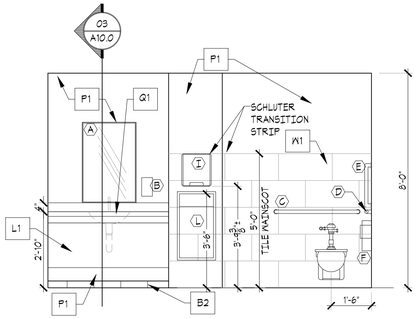

11 MEN RR 136
SCALE: 3/8" = 1'-0"

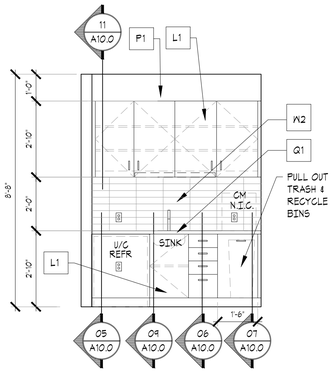

10 COFFEE 121
SCALE: 3/8" = 1'-0"

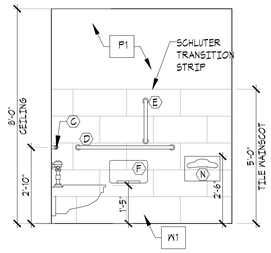

09 UNISEX RR 122
SCALE: 3/8" = 1'-0"

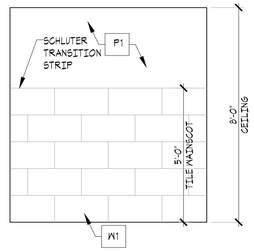

08 UNISEX RR 122
SCALE: 3/8" = 1'-0"

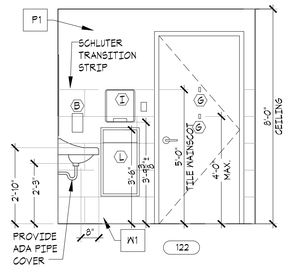

07 UNISEX RR 122
SCALE: 3/8" = 1'-0"

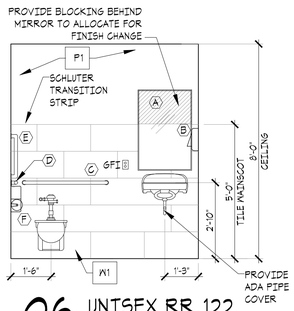

06 UNISEX RR 122
SCALE: 3/8" = 1'-0"

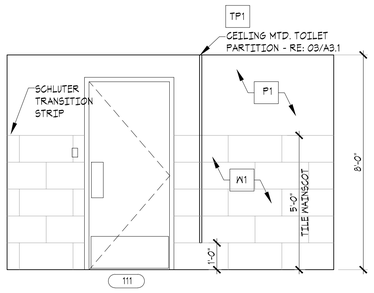

05 WOMEN RR 111
SCALE: 3/8" = 1'-0"

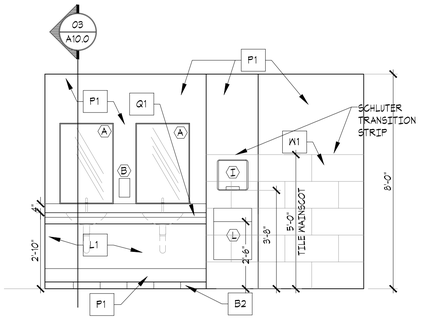

04 WOMEN RR 111
SCALE: 3/8" = 1'-0"

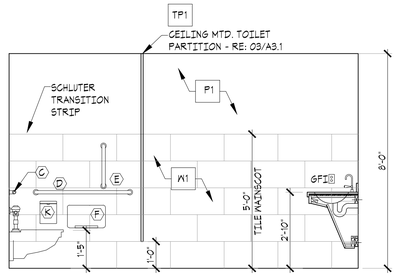

03 WOMEN RR 111
SCALE: 3/8" = 1'-0"

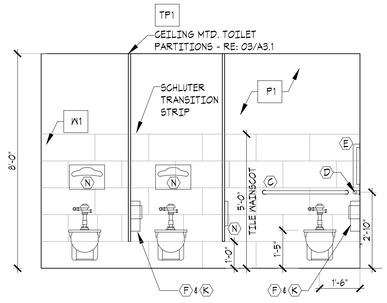

02 WOMEN RR 111
SCALE: 3/8" = 1'-0"

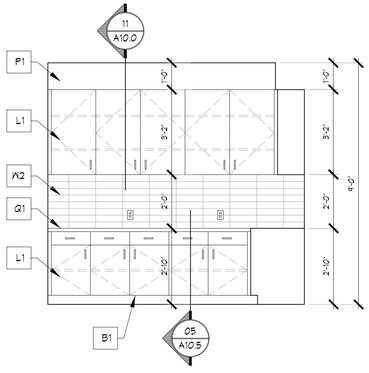

01A BREAK 137
SCALE: 3/8" = 1'-0"

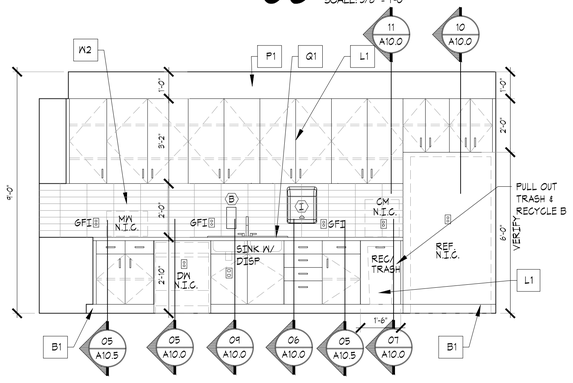

01 BREAK 137
SCALE: 3/8" = 1'-0"

THE MCKINNEY PARTNERSHIP
architects

3600 West Main
Suite 200
Norman, Oklahoma
73072
405.360.1400 p
405.364.8287 f
tmparch.com

Copyright © 2008 The McKinney Partnership Architects, P.C. All Rights Reserved

Seal:

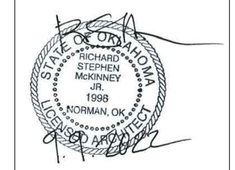

Project:

City of Norman
Municipal Complex Renovation
Municipal Court
321 N. Webster Avenue
Norman, OK

Issue Date:
11/15/22 ISSUED FOR BIDDING

Revisions:

Project Number:
CM083319

Sheet Title:
INTERIOR ELEVATIONS

Sheet Number:
A7.2

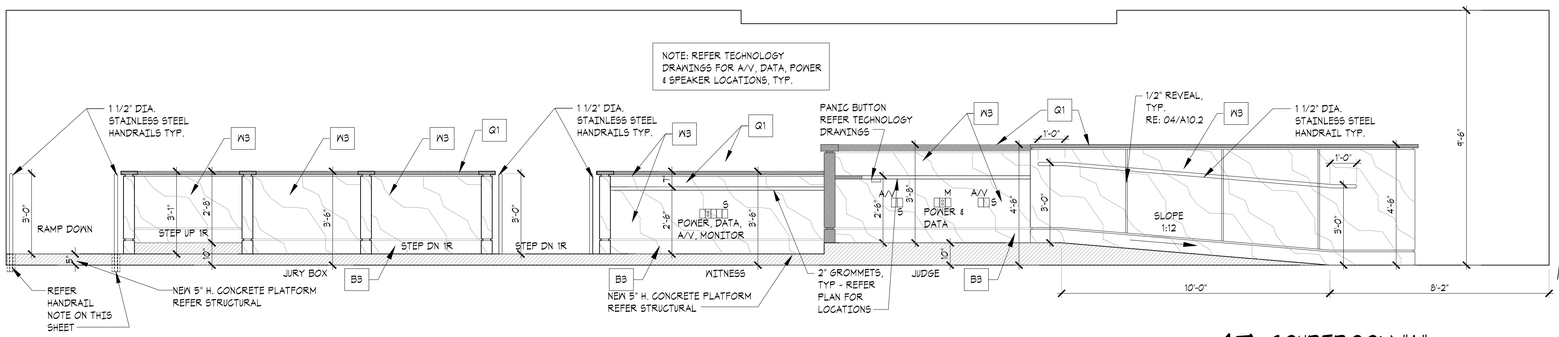

17 COURTROOM "A"
SCALE: 3/8" = 1'-0"

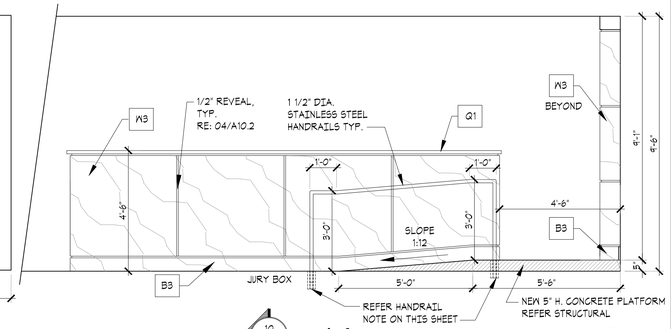

16 COURTROOM "A" /JURY BOX
SCALE: 3/8" = 1'-0"

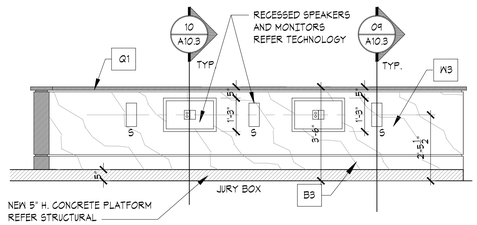

14 COURTROOM "A" /JURY BOX
SCALE: 3/8" = 1'-0"

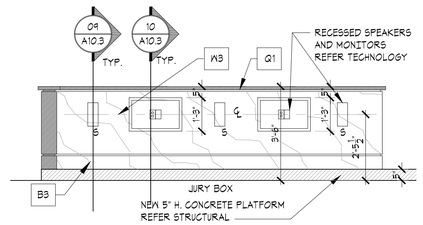

12 COURTROOM "A" /JURY BOX
SCALE: 3/8" = 1'-0"

NOTE:
FOR ALL INTERIOR HANDRAILS SHOWN ATTACHED DIRECTLY TO THE SLAB:

1. PROTECT EMBEDDED POST W/ 2 PART EPOXY DIP AS PER NAAM / NOMMA STANDARDS.
2. USE NON METALLIC EXPANDING GROUT FLUSH WITH TOP OF SLAB.
3. WHERE HANDRAILS ARE SHOWN ATTACHED TO EXISTING SLAB, CORE DRILL & REMOVE EXISTING SLAB AND REPOUR 3" W. X 8"D. CONCRETE PIER FOR HANDRAIL TO BE EMBEDDED.
4. REFER SIMILAR DETAIL 02/A5.1.
5. INTERIOR HANDRAILS WILL NOT HAVE ESCUTCHEON COVERS AT POST BASE. INSTALL FLOORING TIGHTLY AROUND POST SO THERE ARE NOT GAPS.

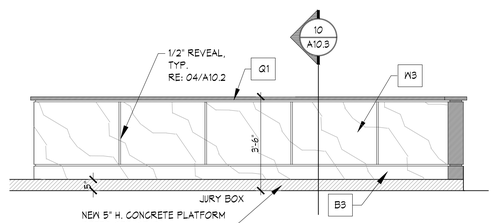

13 COURTROOM "A" /JURY BOX
SCALE: 3/8" = 1'-0"

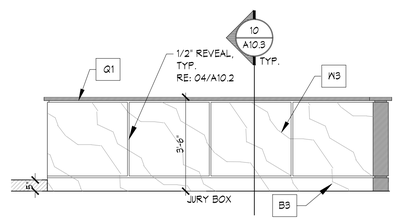

11 COURTROOM "A" /JURY BOX
SCALE: 3/8" = 1'-0"

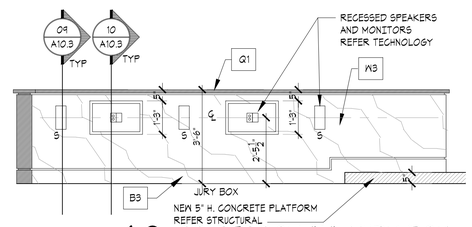

10 COURTROOM "A" /JURY BOX
SCALE: 3/8" = 1'-0"

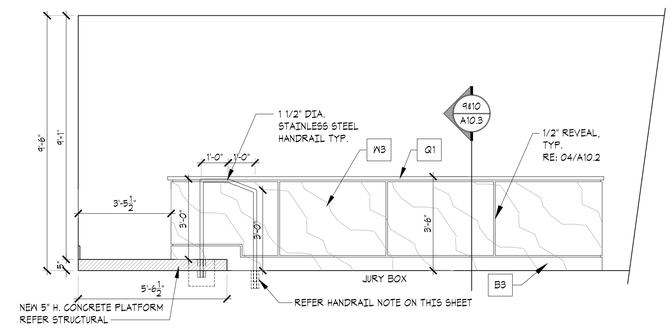

09 COURTROOM "A" /JURY BOX
SCALE: 3/8" = 1'-0"

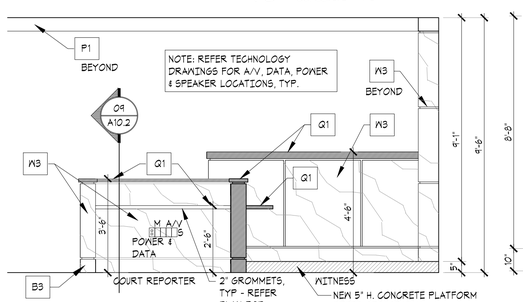

08 COURTROOM "A" / REPORTER&WITNESS
SCALE: 3/8" = 1'-0"

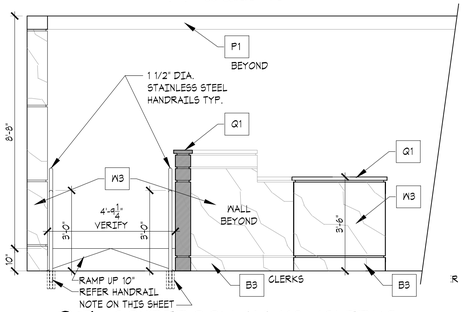

07 COURTROOM "A" 118 /CLERKS
SCALE: 3/8" = 1'-0"

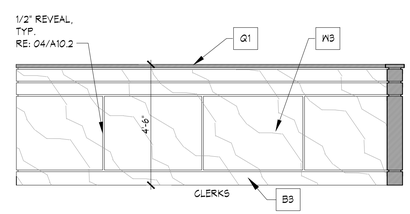

06 COURTROOM "A" / CLERKS
SCALE: 3/8" = 1'-0"

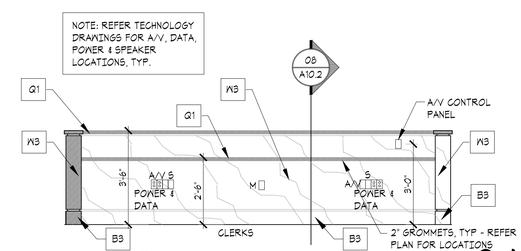

05 COURTROOM "A" / CLERKS
SCALE: 3/8" = 1'-0"

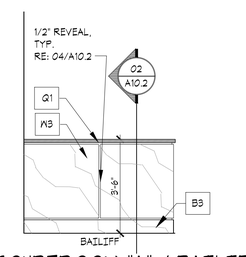

04 COURTROOM "A" / BAILIFF
SCALE: 3/8" = 1'-0"

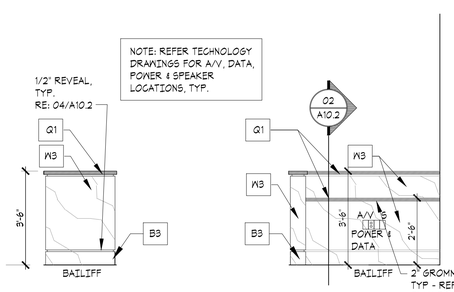

03 COURTROOM "A" / BAILIFF
SCALE: 3/8" = 1'-0"

02 COURTROOM "A" / BAILIFF
SCALE: 3/8" = 1'-0"

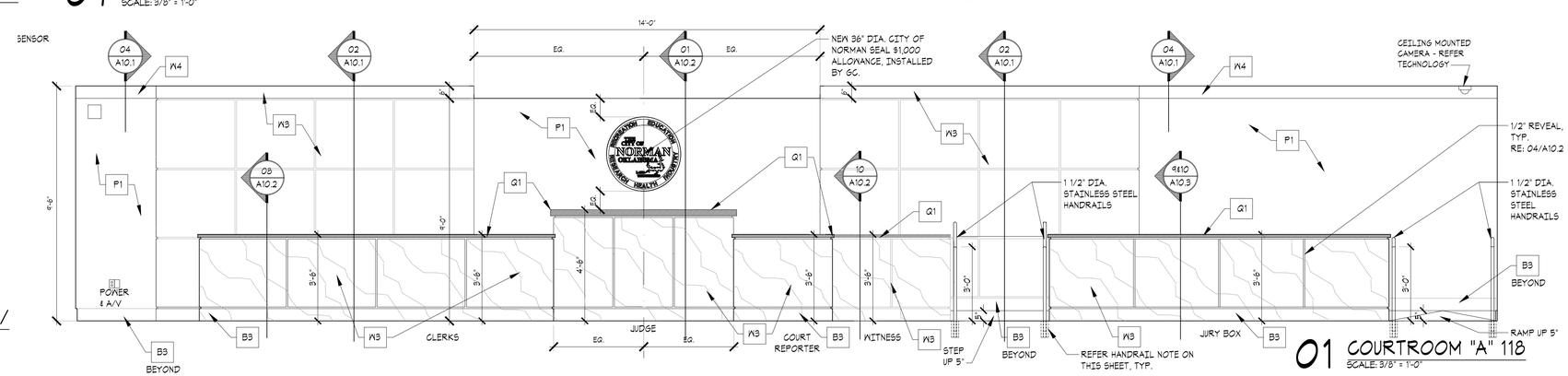

01 COURTROOM "A" 118
SCALE: 3/8" = 1'-0"

THE MCKINNEY PARTNERSHIP
architects
3600 West Main
Suite 200
Norman, Oklahoma
73072
405.360.1400 p
405.364.8287 f
tmparch.com

Copyrighted © 2008 The McKinney Partnership Architects ■ P.C. All Rights Reserved

Seal:

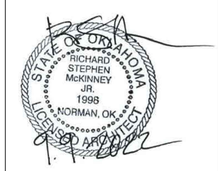

Project:

City of Norman
Municipal Complex Renovation
Municipal Court
321 N. Webster Avenue
Norman, OK

Issue Date:
11/15/22 ISSUED FOR BIDDING

Revisions:

Project Number:
CM083319

Sheet Title:
INTERIOR ELEVATIONS

Sheet Number:
A7.3

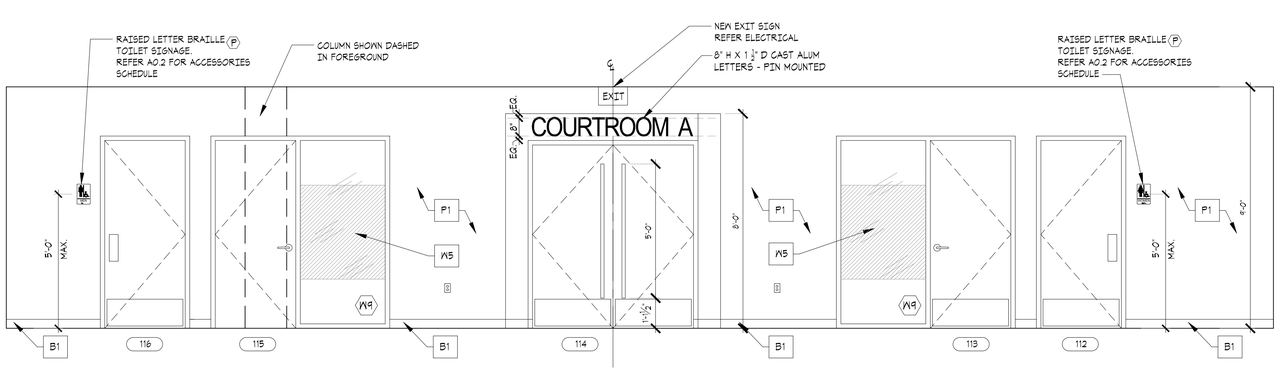

08 JURY POOL 108
SCALE: 3/8" = 1'-0"

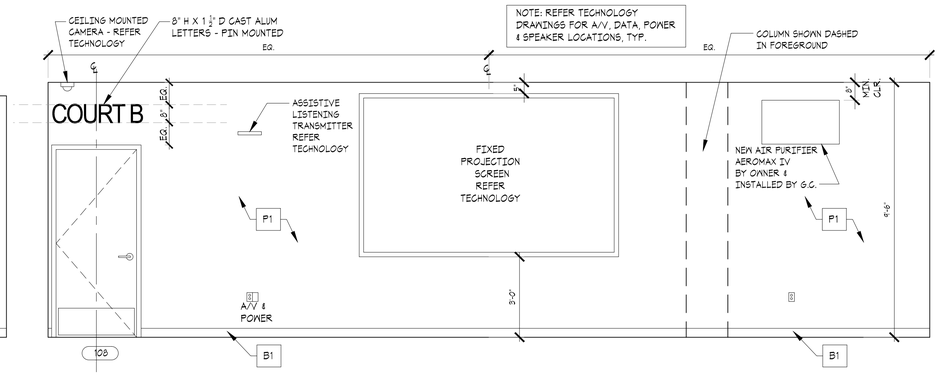

07 JURY POOL 108
SCALE: 3/8" = 1'-0"

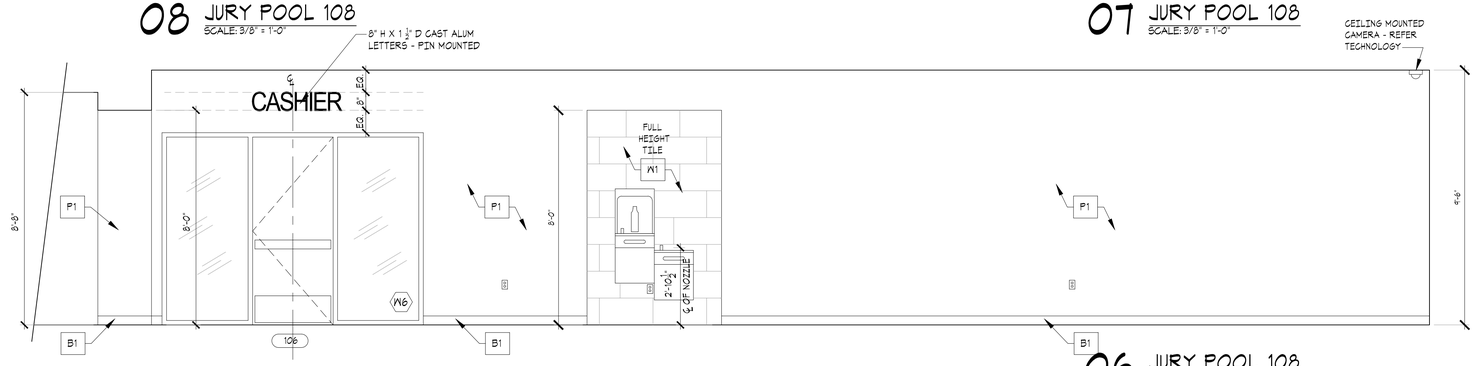

06 JURY POOL 108
SCALE: 3/8" = 1'-0"

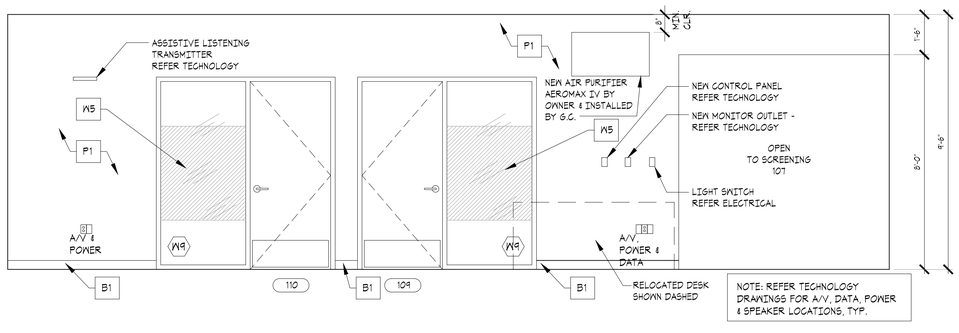

05 JURY POOL 108
SCALE: 3/8" = 1'-0"

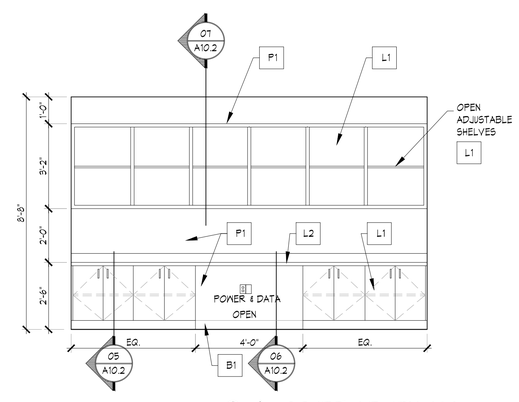

04 COURT ADMIN 126
SCALE: 3/8" = 1'-0"

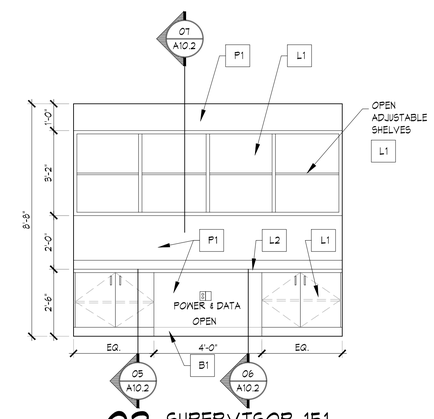

03 SUPERVISOR 151
SCALE: 3/8" = 1'-0"

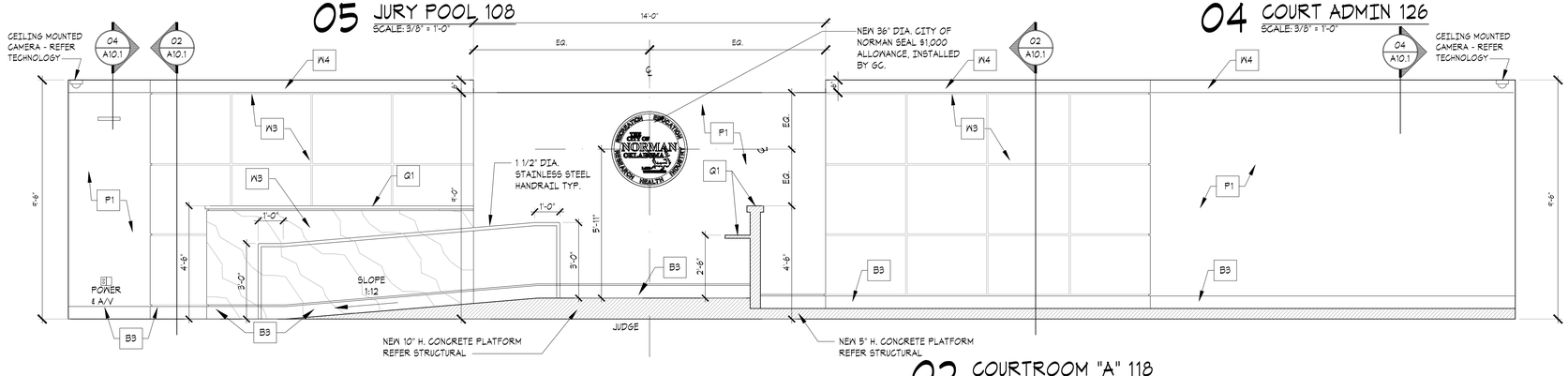

02 COURTROOM "A" 118
SCALE: 3/8" = 1'-0"

01 NOT USED
SCALE: 3/8" = 1'-0"

THE MCKINNEY PARTNERSHIP
architects

3600 West Main
Suite 200
Norman, Oklahoma
73072
405.360.1400 p
405.364.8287 f
tmparch.com

Seal:

Project:

City of Norman
Municipal Complex Renovation
Municipal Court
321 N. Webster Avenue
Norman, OK

Issue Date:
11/15/22 ISSUED FOR BIDDING

Revisions:

Project Number:
CM083319

Sheet Title:
INTERIOR ELEVATIONS

Sheet Number:
A7.4

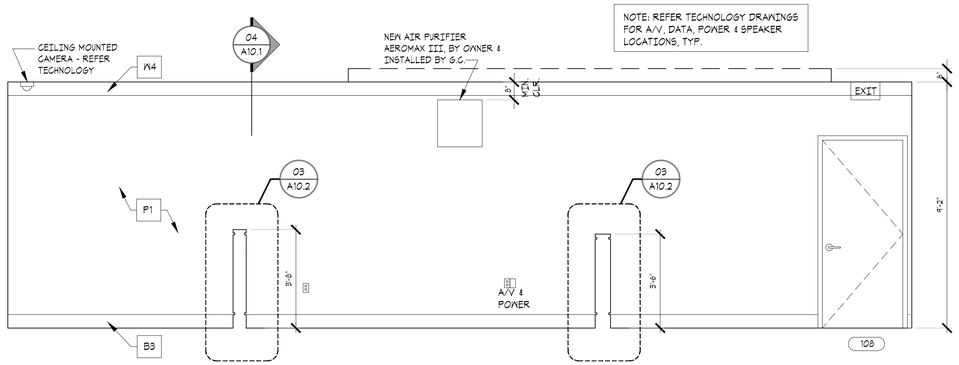

07 COURTROOM "B" 140
SCALE: 3/8" = 1'-0"

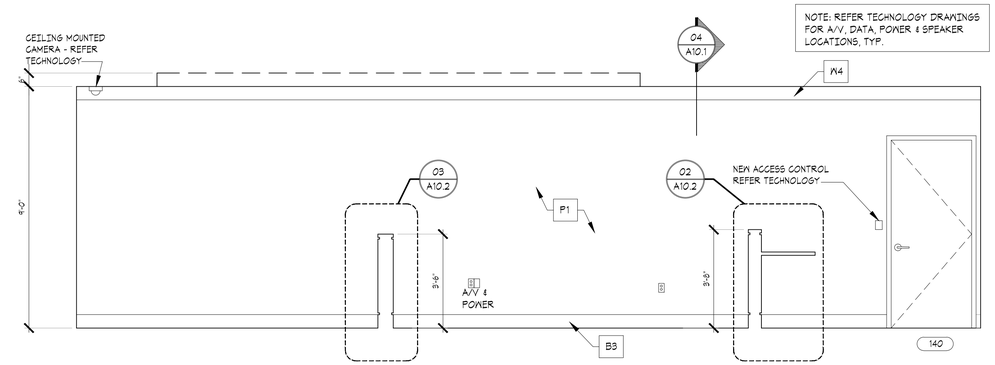

06 COURTROOM "B" 140
SCALE: 3/8" = 1'-0"

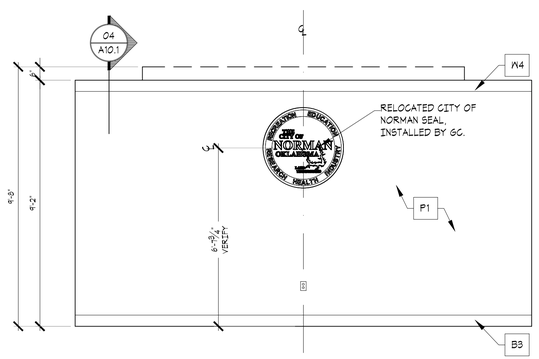

05 COURTROOM "B" 140
SCALE: 3/8" = 1'-0"

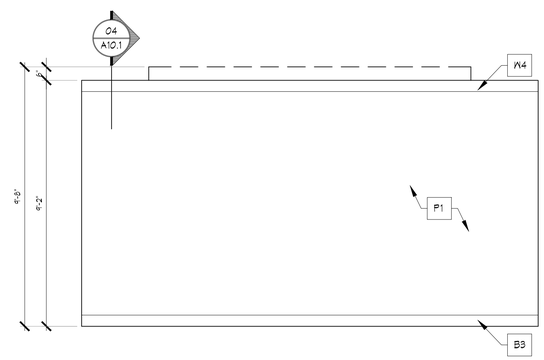

04 COURTROOM "B" 140
SCALE: 3/8" = 1'-0"

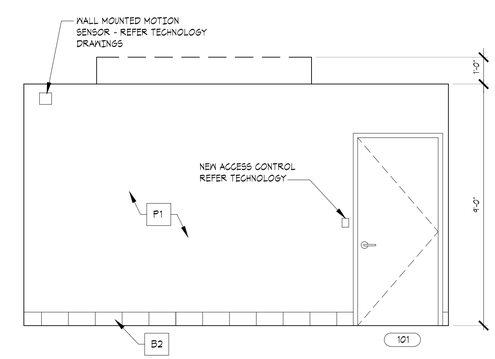

03 LOBBY / WAITING 101
SCALE: 3/8" = 1'-0"

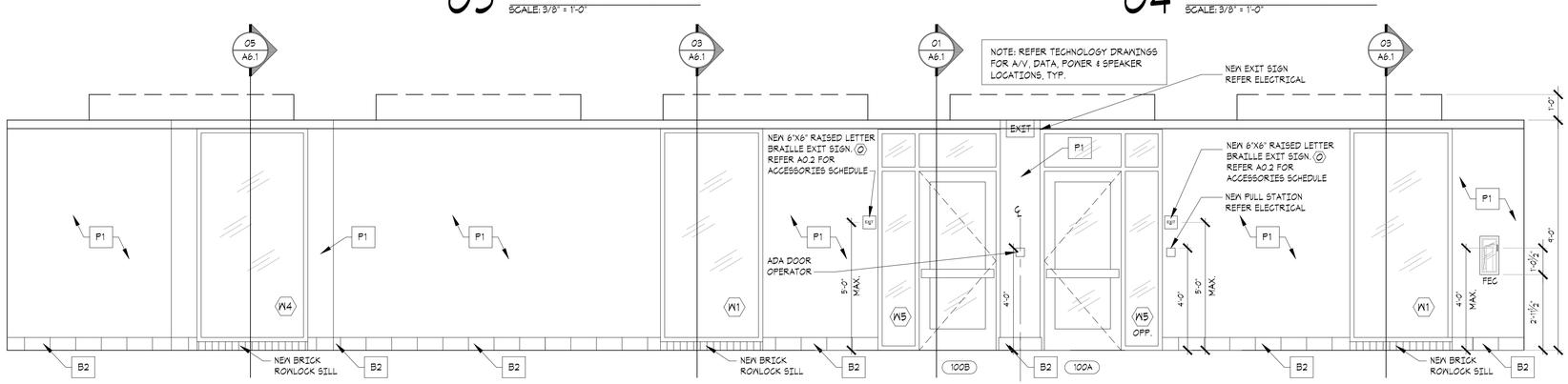

02 LOBBY / WAITING 101
SCALE: 3/8" = 1'-0"

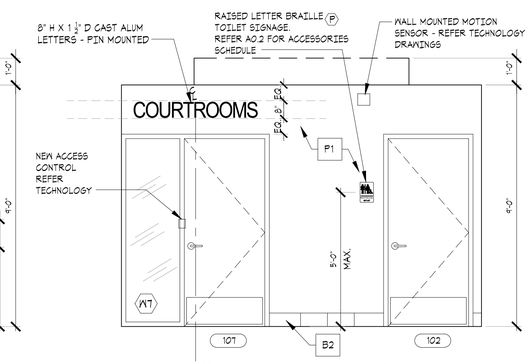

01 LOBBY / WAITING 101
SCALE: 3/8" = 1'-0"

THE MCKINNEY PARTNERSHIP
architects

3600 West Main
Suite 200
Norman, Oklahoma
73072
405.360.1400 p
405.364.8287 f
tmparch.com

Seal:

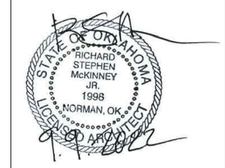

Project:

City of Norman
Municipal Complex Renovation
Municipal Court
321 N. Webster Avenue
Norman, OK

Issue Date:
11/15/22 ISSUED FOR BIDDING

Revisions:

Project Number:
CM083319

Sheet Title:
INTERIOR ELEVATIONS

Sheet Number:
A7.5

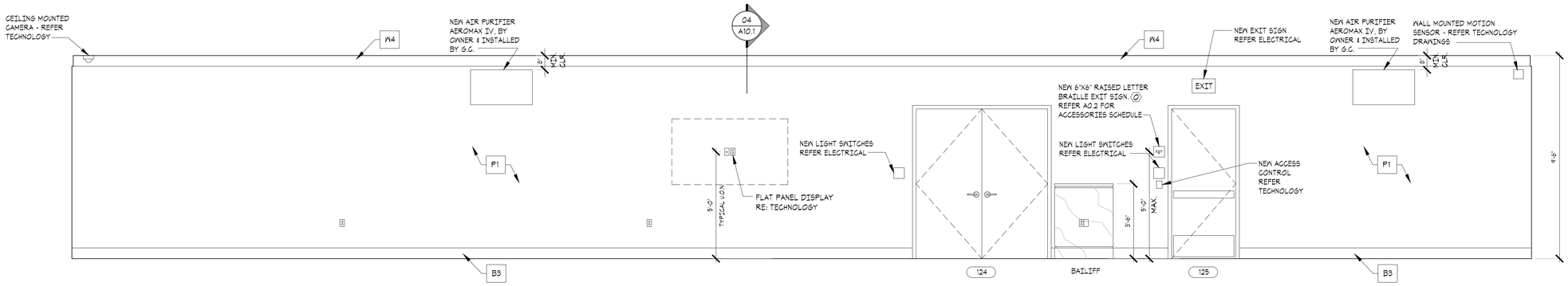

03 COURTROOM "A" 118
SCALE: 3/8" = 1'-0"

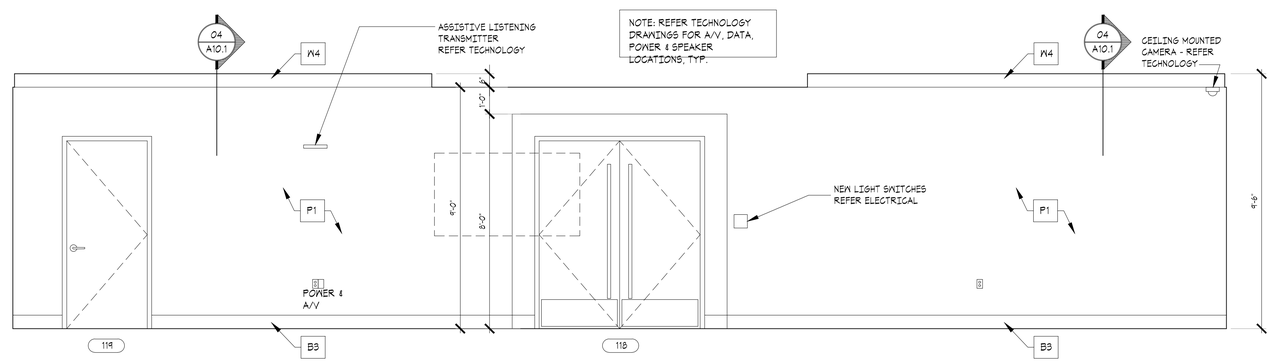

02 COURTROOM "A" 118
SCALE: 3/8" = 1'-0"

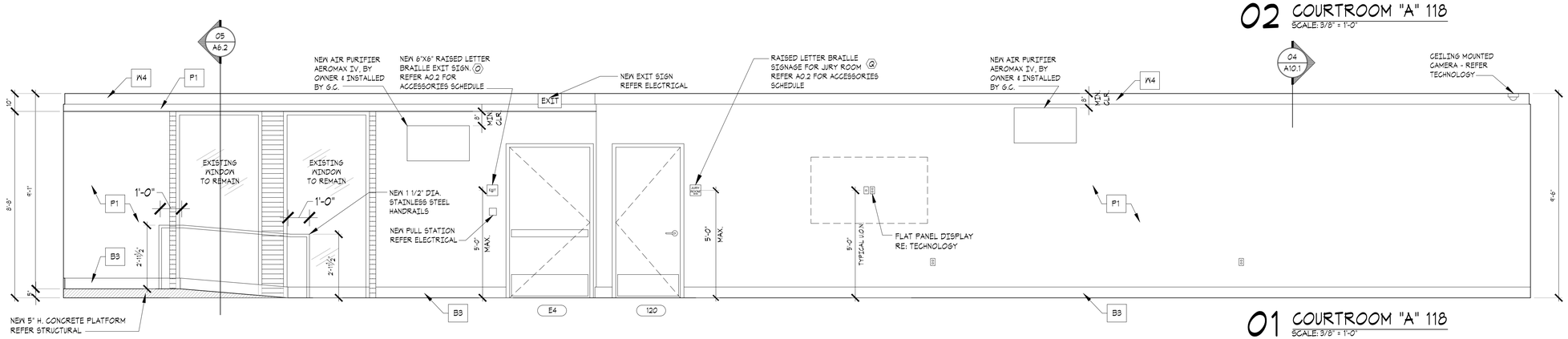

01 COURTROOM "A" 118
SCALE: 3/8" = 1'-0"

THE MCKINNEY PARTNERSHIP
architects

3600 West Main
Suite 200
Norman, Oklahoma
73072
405.360.1400 p
405.364.8287 f
tmparch.com

Seal:

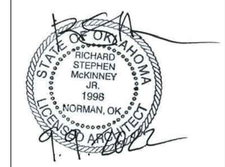

Project:

City of Norman
Municipal Complex Renovation
Municipal Court
321 N. Webster Avenue
Norman, OK

Issue Date:
11/15/22 ISSUED FOR BIDDING

Revisions:

Project Number:
CM083319

Sheet Title:
INTERIOR ELEVATIONS

Sheet Number:
A7.6

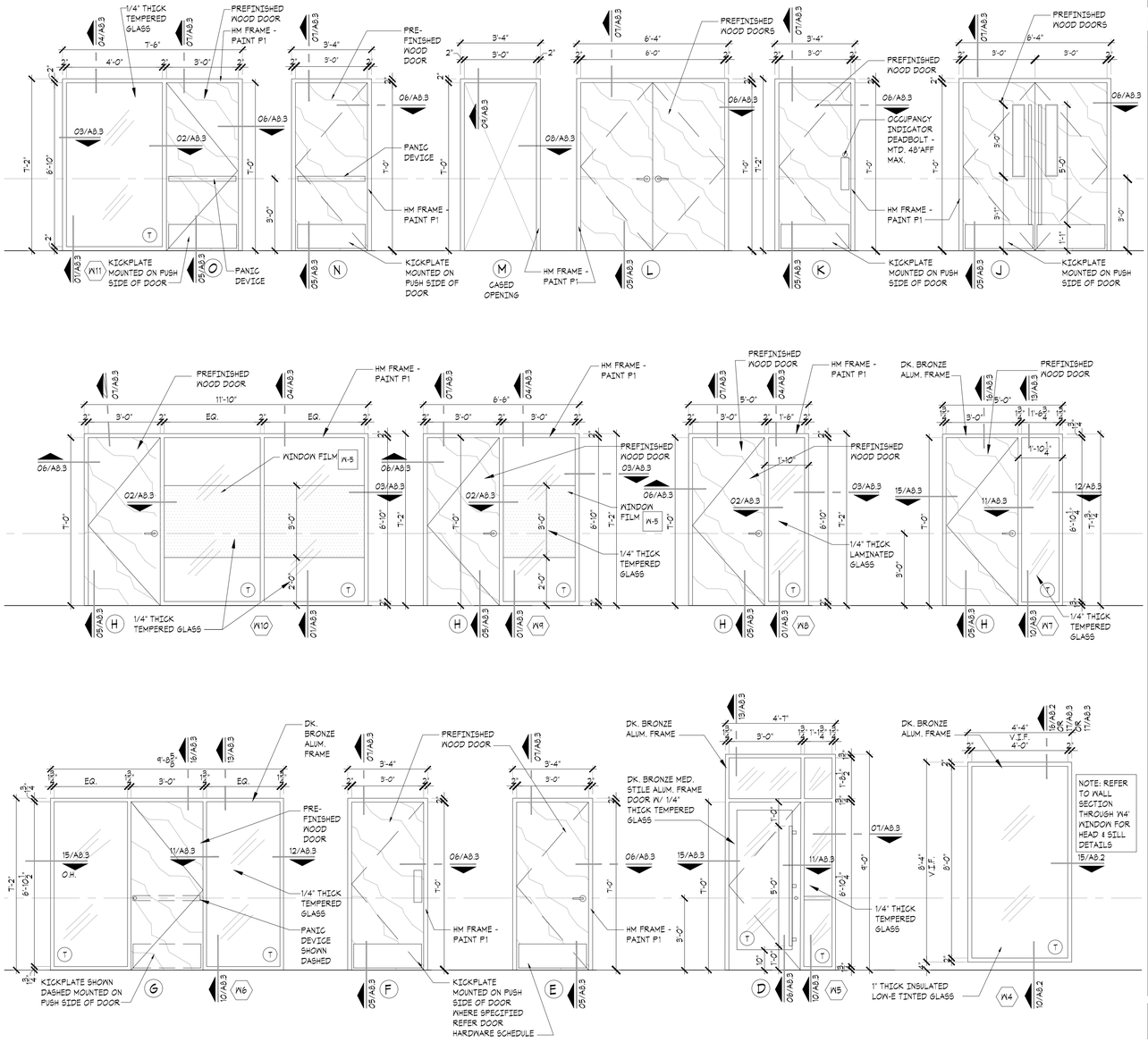

01 DOOR AND WINDOW ELEVATIONS

SCALE: 3/8" = 1'-0"

DOOR SCHEDULE

SIZE		DOOR			FRAME			HARDWARE	COMMENTS
SYM.	SIZE	TYPE	MATERIALS	FIN. / LABEL	TYPE/FIN.	HEAD	JAMB	NUMBER	
E1	(PR) 3'-0" X 7'-0" X 1 3/4"	A	ALUM./GLS.	DK. BRONZE	ALUM./DK. BRONZE	05/A8.2	03/A8.2	1.0	TIMER LOCK/UNLOCK
E2	3'-0" X 7'-0" X 1 3/4"	B	ALUM./GLS.	DK. BRONZE	ALUM./DK. BRONZE	05/A8.2	04/A8.2	2.0	TIMER LOCK/UNLOCK/ADA
E3	3'-8" X 7'-0" X 1 3/4"	C	HM GALV.	PAINT P5	HM GALV./PAINT P5	14/A8.2	13/A8.2	3.0	
E4	3'-0" X 7'-0" X 1 3/4"	C	HM GALV.	PAINT P5	HM GALV./PAINT P5	19/A8.2	18/A8.2	4.0	ALARMED EXIT ONLY
E5	EXIST. 3'-0" X 8'-5 1/2" X 1 3/4"	-	EXISTING	PAINT P5	EXISTING/PAINT P5	-	-	5.0	ACCESS CONTROLLED
E6	EXIST. PR. 3'-0" X 7'-0" X 1 3/4"	-	EXISTING	PAINT P5	EXISTING/PAINT P5	-	-	5.0	
E7	EXIST. 3'-0" X 8'-5 1/4" X 1 3/4"	-	EXISTING	PAINT P5	EXISTING/PAINT P5	-	-	5.0	ACCESS CONTROLLED
100A	3'-0" X 7'-0" X 1 3/4"	D	ALUM./GLS.	DK. BRONZE	ALUM./DK. BRONZE	09/A8.2	08/A8.2	6.1	
100B	3'-0" X 7'-0" X 1 3/4"	D	ALUM./GLS.	DK. BRONZE	ALUM./DK. BRONZE	09/A8.2	08/A8.2	6.0	
101	3'-0" X 7'-0" X 1 3/4"	E	WOOD	PREFIN. STAIN	HM/PAINT P1	07/A8.3	06/A8.3	7.0	ACCESS CONTROLLED
102	3'-0" X 7'-0" X 1 3/4"	K	WOOD	PREFIN. STAIN	HM/PAINT P1	07/A8.3	06/A8.3	8.0	
104	3'-0" X 7'-0" C.O.	M	-	-	HM/PAINT P1	09/A8.3	08/A8.3	-	CASED OPENING
105	3'-0" X 7'-0" X 1 3/4"	G	WOOD	PREFIN. STAIN	ALUM./DK. BRONZE	16/A8.3	15/A8.3	9.0	EXIT ONLY
106	3'-0" X 7'-0" X 1 3/4"	G	WOOD	PREFIN. STAIN	ALUM./DK. BRONZE	16/A8.3	15/A8.3	11.0	
107	3'-0" X 7'-0" X 1 3/4"	H	WOOD	PREFIN. STAIN	ALUM./DK. BRONZE	16/A8.3	15/A8.3	10.0	ACCESS CONTROLLED
108	3'-0" X 7'-0" X 1 3/4"	E	WOOD	PREFIN. STAIN	HM/PAINT P1	07/A8.3	06/A8.3	18.0	
109	3'-0" X 7'-0" X 1 3/4"	H	WOOD	PREFIN. STAIN	ALUM./DK. BRONZE	16/A8.3	15/A8.3	12.1	
110	3'-0" X 7'-0" X 1 3/4"	H	WOOD	PREFIN. STAIN	ALUM./DK. BRONZE	16/A8.3	15/A8.3	12.1	
111	3'-0" X 7'-0" X 1 3/4"	F	WOOD	PREFIN. STAIN	HM/PAINT P1	07/A8.3	06/A8.3	13.0	
112	3'-0" X 7'-0" X 1 3/4"	F	WOOD	PREFIN. STAIN	HM/PAINT P1	07/A8.3	06/A8.3	13.0	
113	3'-0" X 7'-0" X 1 3/4"	H	WOOD	PREFIN. STAIN	ALUM./DK. BRONZE	16/A8.3	15/A8.3	17.1	
114	(PR) 3'-0" X 7'-0" X 1 3/4"	J	WOOD	PREFIN. STAIN	HM/PAINT P1	07/A8.3	06/A8.3	14.0	
115	3'-0" X 7'-0" X 1 3/4"	H	WOOD	PREFIN. STAIN	ALUM./DK. BRONZE	16/A8.3	15/A8.3	17.1	
116	3'-0" X 7'-0" X 1 3/4"	F	WOOD	PREFIN. STAIN	HM/PAINT P1	07/A8.3	06/A8.3	13.0	
117	3'-0" X 7'-0" X 1 3/4"	F	WOOD	PREFIN. STAIN	HM/PAINT P1	07/A8.3	06/A8.3	13.0	
118	(PR) 3'-0" X 7'-0" X 1 3/4"	J	WOOD	PREFIN. STAIN	HM/PAINT P1	07/A8.3	06/A8.3	14.0	
119	3'-0" X 7'-0" X 1 3/4"	E	WOOD	PREFIN. STAIN	HM/PAINT P1	07/A8.3	06/A8.3	15.2	
120	3'-0" X 7'-0" X 1 3/4"	E	WOOD	PREFIN. STAIN	HM/PAINT P1	07/A8.3	06/A8.3	12.1	
121	3'-0" X 7'-0" X 1 3/4"	F	WOOD	PREFIN. STAIN	HM/PAINT P1	07/A8.3	06/A8.3	13.1	
122	3'-0" X 7'-0" X 1 3/4"	K	WOOD	PREFIN. STAIN	HM/PAINT P1	07/A8.3	06/A8.3	8.0	
124	(PR) 3'-0" X 7'-0" X 1 3/4"	L	WOOD	PREFIN. STAIN	HM/PAINT P1	07/A8.3	06/A8.3	16.0	
125	3'-0" X 7'-0" X 1 3/4"	N	WOOD	PREFIN. STAIN	HM/PAINT P1	07/A8.3	06/A8.3	7.1	ACCESS CONTROLLED
126	3'-0" X 7'-0" X 1 3/4"	H	WOOD	PREFIN. STAIN	HM/PAINT P1	07/A8.3	06/A8.3	12.0	
127	3'-0" X 7'-0" X 1 3/4"	O	WOOD	PREFIN. STAIN	HM/PAINT P1	07/A8.3	06/A8.3	6.2	
128	3'-0" X 7'-0" X 1 3/4"	H	WOOD	PREFIN. STAIN	HM/PAINT P1	07/A8.3	06/A8.3	12.0	
129	3'-0" X 7'-0" X 1 3/4"	H	WOOD	PREFIN. STAIN	HM/PAINT P1	07/A8.3	06/A8.3	12.0	
130	3'-0" X 7'-0" X 1 3/4"	H	WOOD	PREFIN. STAIN	HM/PAINT P1	07/A8.3	06/A8.3	11.0	
131	3'-0" X 7'-0" X 1 3/4"	H	WOOD	PREFIN. STAIN	HM/PAINT P1	07/A8.3	06/A8.3	12.0	
132	3'-0" X 7'-0" X 1 3/4"	H	WOOD	PREFIN. STAIN	HM/PAINT P1	07/A8.3	06/A8.3	12.0	
133	3'-0" X 7'-0" X 1 3/4"	H	WOOD	PREFIN. STAIN	HM/PAINT P1	07/A8.3	06/A8.3	12.0	
134	3'-0" X 7'-0" X 1 3/4"	H	WOOD	PREFIN. STAIN	HM/PAINT P1	07/A8.3	06/A8.3	12.0	
135	3'-0" X 7'-0" X 1 3/4"	H	WOOD	PREFIN. STAIN	HM/PAINT P1	07/A8.3	06/A8.3	12.0	
136	3'-0" X 7'-0" X 1 3/4"	K	WOOD	PREFIN. STAIN	HM/PAINT P1	07/A8.3	06/A8.3	8.0	
138	3'-0" X 7'-0" X 1 3/4"	E	WOOD	PREFIN. STAIN	HM/PAINT P1	07/A8.3	06/A8.3	15.0	
139	3'-0" X 7'-0" X 1 3/4"	E	WOOD	PREFIN. STAIN	HM/PAINT P1	07/A8.3	06/A8.3	14.0	ACCESS CONTROLLED
140	3'-0" X 7'-0" X 1 3/4"	E	WOOD	PREFIN. STAIN	HM/PAINT P1	07/A8.3	06/A8.3	14.1	ACCESS CONTROLLED
141	3'-0" X 7'-0" X 1 3/4"	E	WOOD	PREFIN. STAIN	HM/PAINT P1	07/A8.3	06/A8.3	15.0	45 MIN RATED DOOR
142	3'-0" X 7'-0" X 1 3/4"	F	WOOD	PREFIN. STAIN	HM/PAINT P1	07/A8.3	06/A8.3	13.0	
143	3'-0" X 7'-0" X 1 3/4"	H	WOOD	PREFIN. STAIN	HM/PAINT P1	07/A8.3	06/A8.3	12.0	
144	3'-0" X 7'-0" X 1 3/4"	H	WOOD	PREFIN. STAIN	HM/PAINT P1	07/A8.3	06/A8.3	12.0	
145	3'-0" X 7'-0" X 1 3/4"	H	WOOD	PREFIN. STAIN	HM/PAINT P1	07/A8.3	06/A8.3	15.1	
146	3'-0" X 7'-0" X 1 3/4"	H	WOOD	PREFIN. STAIN	HM/PAINT P1	07/A8.3	06/A8.3	14.0	ACCESS CONTROLLED
147	3'-0" X 7'-0" X 1 3/4"	H	WOOD	PREFIN. STAIN	HM/PAINT P1	07/A8.3	06/A8.3	15.1	
148	3'-0" X 7'-0" C.O.	M	-	-	HM/PAINT P1	09/A8.3	08/A8.3	-	CASED OPENING
149	3'-0" X 7'-0" X 1 3/4"	K	WOOD	PREFIN. STAIN	HM/PAINT P1	07/A8.3	06/A8.3	8.0	
150	3'-0" X 7'-0" C.O.	M	-	-	HM/PAINT P1	09/A8.3	08/A8.3	-	CASED OPENING
151	3'-0" X 7'-0" X 1 3/4"	H	WOOD	PREFIN. STAIN	HM/PAINT P1	07/A8.3	06/A8.3	12.0	

DOOR NOTES

1. ALL DOOR HARDWARE SHALL MEET ALL ADA AND BUILDING CODE STANDARDS.
2. WOODGRAIN TO BE RUN VERTICAL AT ALL DOORS.
3. DOOR HARDWARE SHALL BE THE LEVER OR PUSH TYPE, MOUNTED 34" TO 48" ABOVE THE FLOOR AND BE OPERABLE WITH A MAXIMUM EFFORT OF 5 LBS FOR INTERIORS.
4. PROVIDE 18" CLEAR SPACE AT STRIKE/PULL SIDE ON INTERIOR DOORS, AND 12" CLEAR AT STRIKE/PUSH SIDE OF DOORS W/ CLOSERS.
5. ALL INTERIOR DOOR HARDWARE, U.O.N. FINISH SHALL BE US26D/626 U.O.N.
6. PROVIDE ALL REQUIRED ACCESSORIES WHETHER OR NOT NOTED BELOW FOR A FULL, COMPLETE OPERATIONAL INSTALLATION.
7. SUBMIT A FULL AND COMPLETE SUBMITTAL FOR REVIEW AND APPROVAL BY ARCHITECT.
8. ALL DOORS TO BE PREFINISHED WOOD, A GRADE, NATURAL BIRCH, PLAIN SLICED, STAINED WITH RAVINE #RA18 FINISH BY VT INDUSTRIES.

WINDOW SCHEDULE

MARK	LOCATION	SIZE	MATERIAL	REMARKS
W1	EXTERIOR	4'-4" X 8'-4" ± V.I.F.	TUBELITE T14000 - 2" X 4 1/2"	1" INSUL. LOW E TINTED TEMPERED GLASS - INSTALL ACCORDING TO LOCAL CODE
W2	EXTERIOR	11'-1 3/8" X 9'-0" ± V.I.F.	TUBELITE T14000 - 2" X 4 1/2"	1" INSUL. LOW E TINTED TEMPERED GLASS - INSTALL ACCORDING TO LOCAL CODE
W3	EXTERIOR VESTIBULE	5'-0" X 9'-0" ± V.I.F.	TUBELITE T14000 - 2" X 4 1/2"	1" INSUL. LOW E TINTED TEMPERED GLASS - INSTALL ACCORDING TO LOCAL CODE
W4	EXTERIOR	4'-0" X 8'-4" ± V.I.F.	TUBELITE T14000 - 2" X 4 1/2"	1" INSUL. LOW E TINTED TEMPERED GLASS - INSTALL ACCORDING TO LOCAL CODE
W5	INTERIOR VESTIBULE	4'-7" X 9'-0" ± V.I.F.	TUBELITE 4500 - 1 3/4" X 4 1/2"	1/4" TEMPERED GLASS - INSTALL ACCORDING TO LOCAL CODE
W6	INTERIOR EXIT LOBBY	9'-8 5/8" X 7'-2" ± V.I.F.	TUBELITE 4500 - 1 3/4" X 4 1/2"	1/4" TEMPERED GLASS - INSTALL ACCORDING TO LOCAL CODE
W7	INTERIOR SCREENING	5'-0" X 7'-2" ± V.I.F.	TUBELITE 4500 - 1 3/4" X 4 1/2"	1/4" TEMPERED GLASS - INSTALL ACCORDING TO LOCAL CODE
W8	HOLDING	5'-0" X 7'-2" ± V.I.F.	HOLLOW METAL - 2" X 5 7/8"	1/4" LAMINATED GLASS - INSTALL ACCORDING TO LOCAL CODE
W9	INTERIOR OFFICE	6'-6" X 7'-2" ± V.I.F.	HOLLOW METAL - 2" X 5 7/8"	1/4" TEMPERED GLASS - INSTALL ACCORDING TO LOCAL CODE
W10	INTERIOR CONFERENCE	11'-10" X 7'-2" ± V.I.F.	HOLLOW METAL - 2" X 5 7/8"	1/4" TEMPERED GLASS - INSTALL ACCORDING TO LOCAL CODE
W11	INTERIOR VESTIBULE	7'-6" X 9'-0" ± V.I.F.	HOLLOW METAL - 2" X 5 7/8"	1/4" TEMPERED GLASS - INSTALL ACCORDING TO LOCAL CODE
W12	RECEPTIONIST 103	CUSTOM - REFER TO PLAN & INT. ELEVS FOR DIMS	BULLET RESIST. TRANSACTION WIND., HORIZONTAL BAFFLE W/ DEAL TRAY	LEVEL 3, BULLET RESISTANT, 1 1/4" LAMINATED GLAZING
W13	PAY STATIONS 105	CUSTOM - REFER TO PLAN & INT. ELEVS FOR DIMS	BULLET RESIST. TRANSACTION WIND., HORIZONTAL BAFFLE W/ DEAL TRAY	LEVEL 3, BULLET RESISTANT, 1 1/4" LAMINATED GLAZING

THE MCKINNEY PARTNERSHIP
architects

3600 West Main
Suite 200
Norman, Oklahoma
73072
405.360.1400 p
405.364.8287 f
tmparch.com

Seal:

STATE OF OKLAHOMA
RICHARD STEPHEN McKINNEY JR.
1998
NORMAN, OK
LICENSED ARCHITECT

Project:

City of Norman
Municipal Complex Renovation
Municipal Court
321 N. Webster Avenue
Norman, OK

Issue Date:
11/15/22 ISSUED FOR BIDDING

Revisions:

Project Number:
CM083319

Sheet Title:
DOOR AND WINDOW SCHEDULE
DOOR AND WINDOW ELEVATIONS

Sheet Number:
A8.0

HARDWARE SETS:

NOTE: ALL HARDWARE TO BE US26D/626 FINISH U.O.N., CYLINDRICAL LOCKSETS YALE GRADE 1, ONLY RATED DOOR IS DOOR 141
TWO ACCESS CONTROL KEYPADS AND ELECTRIC STRIKES TO BE RE-USED FROM DEMOLISHED EXTERIOR DOORS-REFER TECHNOLOGY DRAWINGS.

SET #1.0 - PR. EXT. ALUMINUM MEDIUM STILE DOORS AND ALUM. FRAME

DOORS: E1

1 CONTINUOUS HINGE	CFM835LI-HD1		PEMKO
1 CONTINUOUS HINGE	CFM835LI-HD1 SER12		PEMKO
1 CVR EXIT, EXIT ONLY ELR	6220 EO	630	YALE
1 CVR EXIT, EXIT ONLY ELR	6220 B P 5 EO	630	YALE
2 OFFSET DOOR PULL	RM3311-60 MTG-TYPE 12XHD MP	US32D	ROCKWOOD
2 SURFACE CLOSER	5831 TBGN134-47	689	YALE
1 THRESHOLD	252XSAF6		PEMKO
2 DOOR BOTTOM SWEEP	345DV		PEMKO
1 ELECTROLYNX HARNESS	QC-C003		MCKINNEY
1 ELECTROLYNX HARNESS	QC-C1500P		MCKINNEY
1 CONTROLLER	782		YALE

WEATHERSTRIPPING BY DOOR MANUFACTURER.

COORDINATE VOLTAGE, OPERATION AND ELECTRICAL CHARACTERISTICS WITH ALL RELATED TRADES.

DOOR POSITION SWITCHES, LOCK/UNLOCK TIMER, WIRING AND CONNECTIONS BY SECURITY CONTRACTOR.

OPERATION: DOORS UNLOCKED DURING THE DAY CONTROLLED BY CONTROLLER. EGRESS BY PANIC ON PUSH SIDE, FREE EGRESS AT ALL TIMES. PROVIDE ALL REQUIRED CONNECTIONS TO BUILDING FIRE ALARM SYSTEM. ENTRY TO VESTIBULE 100 AVAILABLE WITH KEY AT DOOR E2 WHEN BUILDING IS LOCKED.

SET #2.0 - EXTERIOR ALUMINUM MED. STILE DOOR / ALUM. FRAME

DOORS: E2

1 CONTINUOUS HINGE	CFM835LI-HD1 SER12		PEMKO
1 RIM EXIT DEVICE, NL	6100 P 121NL K402	630	YALE
1 OFFSET DOOR PULL	RM3311-60 MTG-TYPE 12XHD MP	US32D	ROCKWOOD
1 CONCEALED OVERHEAD STOP	1-X36	630	RIXSON
1 AUTOMATIC OPENER	8331	689	NORTON
1 THRESHOLD	171A		PEMKO
1 DOOR BOTTOM SWEEP	345DV		PEMKO
1 ELECTROLYNX HARNESS	QC-C003		MCKINNEY
1 ELECTROLYNX HARNESS	QC-C1500P		MCKINNEY
1 DOOR SWITCH	503		NORTON
1 CONTROLLER	782		YALE
1 RAIN GUARD	346D		PEMKO

WEATHERSTRIPPING BY DOOR MANUFACTURER.

COORDINATE VOLTAGE, OPERATION AND ELECTRICAL CHARACTERISTICS WITH ALL RELATED TRADES.

DOOR POSITION SWITCHES, LOCK/UNLOCK TIMER, WIRING AND CONNECTIONS BY SECURITY CONTRACTOR.

OPERATION: DOORS UNLOCKED DURING THE DAY CONTROLLED BY CONTROLLER AND AUTOMATIC OPERATOR. EGRESS BY PANIC ON PUSH SIDE, FREE EGRESS AT ALL TIMES, AND AUTOMATIC OPERATOR. PROVIDE ALL REQUIRED CONNECTIONS TO BUILDING FIRE ALARM SYSTEM.

SET #3.0 - EXTERIOR GALV. HM. DOOR / GALV. HM. FRAME

DOORS: E3

3 HINGES, FULL MORTISE HVY WT	T4A3386 4-1/2"X4-1/2" NRP	US32D	MCKINNEY
1 STOREROOM LOCK	AU 4705LN K402	630	YALE
1 SURFACE CLOSER	5831 TBGN134-47	689	YALE
1 THRESHOLD	171A		PEMKO
1 GASKETING	290DPK		PEMKO
1 DOOR BOTTOM SWEEP	345DV		PEMKO
1 RAIN GUARD	346D		PEMKO

SET #4.0 - EXTERIOR GALV. HM. DOOR / GALV. HM. FRAME

DOOR: E4

2 HINGES, FULL MORTISE	TA2314 4-1/2"X4-1/2" NRP	US32D	MCKINNEY
1 HINGE, FULL MORTISE	TA2314 4-1/2"X4-1/2" QC12	US32D	MCKINNEY
1 RIM EXIT DEVICE, EO	6100 A-ALR EO K640	630	YALE
1 SURFACE CLOSER	5831 TBGN134-47	689	YALE
1 THRESHOLD	171A		PEMKO
1 GASKETING	290DPK		PEMKO
1 DOOR BOTTOM SWEEP	345DV		PEMKO
1 RAIN GUARD	346D		PEMKO
1 ELECTROLYNX HARNESS	QC-C003		MCKINNEY
1 ELECTROLYNX HARNESS	QC-C1500P		MCKINNEY
1 POWER SUPPLY	AQL		SECURITRON

ALARMED EXIT ONLY. COORDINATE WITH TECHNOLOGY AND ELECTRICAL DRAWINGS.

SET #5.0 - EXTERIOR EXIST. HM. DOOR / EXIST. HM FRAME

DOORS: E5, E6, E7

DOORS, FRAMES, AND HARDWARE ARE EXISTING TO REMAIN.

SET #6.0 - VESTIBULE ALUMINUM MED. STILE DOOR / ALUM. FRAME

DOOR: 100B

1 CONTINUOUS HINGE	CFM835LI-HD1		PEMKO
2 STRAIGHT DOOR PULLS	RM3301-60 MTG-TYPE 5HD MP BTB	US32D	ROCKWOOD
1 AUTOMATIC OPENER	8331	689	NORTON
1 DOOR SWITCH	503		NORTON
1 DOOR SWITCH	504		NORTON

DOOR PILE WEATHERING BY ALUMINUM FRAME SUPPLIER.

SET #6.1 - VESTIBULE ALUMINUM MED. STILE DOOR / ALUM. FRAME

DOOR: 100A

1 CONTINUOUS HINGE	CFM835LI-HD1		PEMKO
2 STRAIGHT DOOR PULLS	RM3301-60 MTG-TYPE 5HD MP BTB	US32D	ROCKWOOD
1 SURFACE CLOSER	5831 TBGN134-47	689	YALE

DOOR PILE WEATHERING BY ALUMINUM FRAME SUPPLIER.

SET #6.2 - VESTIBULE WOOD DOOR / ALUM. FRAME

DOOR: 127

3 HINGE, FULL MORTISE	TA2714 4-1/2"X4-1/2"	US26D	MCKINNEY
1 RIM EXIT DEVICE, PASSAGE	6100 AU628F	630	YALE
1 SURFACE CLOSER	5801 TBGN134-47	689	YALE
1 KICK PLATE	K1050 10"X34" 4BE CSK	US32D	ROCKWOOD
1 WALL STOP	405	US26D	ROCKWOOD
3 SILENCER	608-RKW		ROCKWOOD

DOOR PILE WEATHERING BY ALUMINUM FRAME SUPPLIER.

SET #7.0 - CORRIDOR WOOD DOOR / HM. FRAME

DOORS: 101

3 HINGES, FULL MORTISE	TA2714 4-1/2"X4-1/2"	US26D	MCKINNEY
1 RIM EXIT DEVICE, NL	6100 AU627F	630	YALE
1 ELECTRIC STRIKE	9500-LBSM	630	HES
1 CONNECTOR	2007M		HES
1 SURFACE CLOSER	5801 TBGN134-47	689	YALE
1 KICK PLATE	K1050 10"X34" 4BE CSK	US32D	ROCKWOOD
1 WALL STOP	405	US26D	ROCKWOOD
3 SILENCER	608-RKW		ROCKWOOD
1 POWER SUPPLY	AQL		SECURITRON

COORDINATE VOLTAGE, OPERATION AND ELECTRICAL CHARACTERISTICS WITH ALL RELATED TRADES.

DOOR POSITION SWITCHES, RE-USE OF EXISTING ACCESS CONTROL KEYPAD, REQUEST TO EXIT, WIRING AND
CONNECTIONS BY SECURITY CONTRACTOR.
OPERATION: ELECTRIC STRIKE FOR ACCESS CONTROL. DOOR IS NORMALLY CLOSED, LATCHED AND SECURED. INGRESS BY ACCESS CONTROL KEYPAD, EGRESS BY PANIC ON PUSH SIDE, FREE EGRESS AT ALL TIMES.

SET #7.1 - CORRIDOR WOOD DOOR / HM. FRAME

DOORS: 125

3 HINGES, FULL MORTISE	TA2714 4-1/2"X4-1/2"	US26D	MCKINNEY
1 RIM EXIT DEVICE, NL	6100 AU627F	630	YALE
1 ELECTRIC STRIKE	9500-LBSM	630	HES
1 CONNECTOR	2007M		HES
1 SURFACE CLOSER	5801 TBGN134-47	689	YALE
1 KICK PLATE	K1050 10"X34" 4BE CSK	US32D	ROCKWOOD
1 WALL STOP	405	US26D	ROCKWOOD
1 ACOUSTICAL DOOR SEAL SET	PEMKOSTCSET-1E		PEMKO
3 SILENCER	608-RKW		ROCKWOOD
1 POWER SUPPLY	AQL		SECURITRON

COORDINATE VOLTAGE, OPERATION AND ELECTRICAL CHARACTERISTICS WITH ALL RELATED TRADES.

DOOR POSITION SWITCHES, RE-USE OF EXISTING ACCESS CONTROL KEYPAD, REQUEST TO EXIT, WIRING AND
CONNECTIONS BY SECURITY CONTRACTOR.
OPERATION: ELECTRIC STRIKE FOR ACCESS CONTROL. DOOR IS NORMALLY CLOSED, LATCHED AND SECURED. INGRESS BY ACCESS CONTROL KEYPAD, EGRESS BY PANIC ON PUSH SIDE, FREE EGRESS AT ALL TIMES.

SET #8.0 - UNISEX RESTROOM WOOD DOOR / HM. FRAME

DOORS: 102, 122, 136, 149

3 HINGES, FULL MORTISE, HVY WT	T4A3386 4-1/2"X4-1/2"	US26D	MCKINNEY
1 INDICATOR DEADBOLT	D262	626	YALE
1 DOOR PULL	111 8D MTG	US32D	ROCKWOOD
1 PUSH PLATE	70C-RKW 4BE CSK	US32D	ROCKWOOD
1 SURFACE CLOSER	5801 TBGN134-47	689	YALE
1 KICK PLATE	K1050 10"X34" 4BE CSK	US32D	ROCKWOOD
1 WALL STOP	405	US26D	ROCKWOOD
1 KICK DOWN DOOR HOLDER	461	US26D	ROCKWOOD
3 SILENCER	608-RKW		ROCKWOOD

SET #9.0 - EXIT LOBBY WOOD DOOR / ALUM. FRAME

DOORS: 105

1 CONTINUOUS HINGE	CFM835LI-HD1		PEMKO
1 RIM EXIT DEVICE, EO	6100 EO	630	YALE
1 SURFACE CLOSER	5801 TBGN134-47	689	YALE
1 KICK PLATE	K1050 10"X34" 4BE CSK	US32D	ROCKWOOD
1 WALL STOP	405	US26D	ROCKWOOD

SILENCER/DOOR PILE BY ALUMINUM FRAME SUPPLIER.

SET #10.0 - SCREENING WOOD DOOR / ALUM. FRAME

DOORS: 107

1 CONTINUOUS HINGE	CFM835LI-HD1		PEMKO
1 STOREROOM LOCK	AU 4705LN K402	626	YALE
1 ELECTRIC STRIKE	1500-LMS	630	HES
1 CONNECTOR	2007M		HES
1 SURFACE CLOSER	5801 TBGN134-47	689	YALE
1 KICK PLATE	K1050 10"X34" 4BE CSK	US32D	ROCKWOOD
1 WALL STOP	405	US26D	ROCKWOOD
1 KICK DOWN DOOR HOLDER	461	US26D	ROCKWOOD
1 POWER SUPPLY	AQL		SECURITRON

SILENCER/DOOR PILE BY ALUMINUM FRAME SUPPLIER.

COORDINATE VOLTAGE, OPERATION AND ELECTRICAL CHARACTERISTICS WITH ALL RELATED TRADES.

DOOR POSITION SWITCHES, CREDENTIAL READER, REQUEST TO EXIT, WIRING AND CONNECTIONS BY SECURITY
CONTRACTOR.
OPERATION: ELECTRIC STRIKE FOR ACCESS CONTROL. DOOR IS NORMALLY CLOSED, LATCHED AND SECURED. INGRESS BY ACCESS CONTROL KEYPAD, FREE EGRESS AT ALL TIMES.

SET #11.0 - EXIT LOBBY WOOD DOOR / ALUM. FRAME

DOORS: 106

1 CONTINUOUS HINGE	CFM835LI-HD1		PEMKO
1 RIM EXIT DEVICE, PASSAGE	6100 AU628F	630	YALE
1 SURFACE CLOSER	5801 TBGN134-47	689	YALE
1 KICK PLATE	K1050 10"X34" 4BE CSK	US32D	ROCKWOOD
1 WALL STOP	405	US26D	ROCKWOOD

SILENCER/DOOR PILE BY ALUMINUM FRAME SUPPLIER.

SET #12.0 - OFFICE WOOD DOOR / HM. FRAME

DOORS: 126, 128, 129, 131-135, 143, 144, 151

3 HINGES FULL MORTISE	TA2714 4-1/2"X4-1/2"	US26D	MCKINNEY
1 ENTRY LOCK	AU 4707LN K402	626	YALE
1 WALL STOP	409	US26D	ROCKWOOD
3 SILENCER	608-RKW		ROCKWOOD

SET #12.1 - JURY, PROSECUTOR / HM. FRAME

DOORS: 109, 110, 120

3 HINGES FULL MORTISE	TA2714 4-1/2"X4-1/2"	US26D	MCKINNEY
1 ENTRY LOCK	AU 4707LN K402	626	YALE
1 WALL STOP	405	US26D	ROCKWOOD
1 ACOUSTICAL DOOR SEAL SET	PEMKOSTCSET-1E		PEMKO
3 SILENCER	608-RKW		ROCKWOOD

SET #13.0 - RESTROOM WOOD DOOR / HM. FRAME

DOORS: 111, 112, 116, 117, 142

3 HINGES, FULL MORTISE, HVY WT	T4A3786 4-1/2"X4-1/2"	US26D	MCKINNEY
1 DOOR PULL	111 8D MTG	US32D	ROCKWOOD
1 PUSH PLATE	70C-RKW 4BE CSK	US32D	ROCKWOOD
1 SURFACE CLOSER	5801 TBGN134-47	689	YALE
1 KICK PLATE	K1050 10"X34" 4BE CSK	US32D	ROCKWOOD
1 WALL STOP	405	US26D	ROCKWOOD
1 KICK DOWN DOOR HOLDER	461	US26D	ROCKWOOD
3 SILENCER	608-RKW		ROCKWOOD

SET #13.1 - RESTROOM VESTIBULE WOOD DOOR / HM. FRAME

DOORS: 121

1 HINGES, FULL MORTISE	TA2714 4-1/2"X4-1/2"	US26D	MCKINNEY
1 DOOR PULL	111 8D MTG	US32D	ROCKWOOD
1 PUSH PLATE	70C-RKW 4BE CSK	US32D	ROCKWOOD
1 KICK PLATE	K1050 10"X34" 4BE CSK	US32D	ROCKWOOD
1 WALL STOP	405	US26D	ROCKWOOD
1 KICK DOWN DOOR HOLDER	461	US26D	ROCKWOOD
3 SILENCER	608-RKW		ROCKWOOD

SET #14.0 - COURTROOM PR. WOOD DOORS / HM. FRAME

DOORS: 114, 118

2 CONTINUOUS HINGE	CFM835LI-HD1		PEMKO
4 STRAIGHT DOOR PULLS	RM3301-60 MTG-TYPE 5HD MP BTB	US32D	ROCKWOOD
2 SURFACE CLOSER	5831 TBGN134-47	689	YALE
2 KICK PLATE	K1050 10"X34" 4BE CSK	US32D	ROCKWOOD
1 SOUND GASKETING	S771		PEMKO
2 ACOUSTICAL DOOR SEAL SET	PEMKOSTCSET 1E		PEMKO
1 KICK DOWN DOOR HOLDER	461	US26D	ROCKWOOD
2 SILENCER	608-RKW		

SET #15.0 - ELEC. / STORAGE WD. DOOR / HM. FRAME

DOORS: 138, 141

3 HINGES FULL MORTISE	TA2714 4-1/2"X4-1/2"	US26D	MCKINNEY
1 STOREROOM LOCK	AU 4705LN K402	626	YALE
1 SURFACE CLOSER	5801 TBGN134-47	626	YALE
1 KICK PLATE	K1050 10"X34" 4BE CSK	US32D	ROCKWOOD
1 WALL STOP	405	US26D	ROCKWOOD
3 SILENCER	608-RKW	689	ROCKWOOD

SET #15.1 - HOLDING WD. DOOR / HM. FRAME

DOORS: 145, 147

3 HINGES FULL MORTISE	TA2714 4-1/2"X4-1/2"	US26D	MCKINNEY
1 STOREROOM LOCK	AU 4705LN K402	626	YALE
1 CONCEALED OVH STOP	1-X36	630	RIXSON
3 SILENCER	608-RKW		ROCKWOOD

SET #15.2 - STORAGE WD. DOOR / HM. FRAME

DOORS: 119

3 HINGES FULL MORTISE	TA2714 4-1/2"X4-1/2"	US26D	MCKINNEY
1 STOREROOM LOCK	AU 4705LN K402	626	YALE
1 WALL STOP	405	US26D	ROCKWOOD
3 SILENCER	608-RKW		ROCKWOOD

SET #16.0 - PR. STORAGE WOOD DOORS / HM. FRAME

DOORS: 124

6 HINGES FULL MORTISE	TA2714 4-1/2"X4-1/2"	US26D	MCKINNEY
2 ROLLER CATCHES	592	US26D	ROCKWOOD
2 DUMMY TRIM	AU 4655LN	626	YALE
2 OVERHEAD STOP	55-X36	652	RIXSON
2 SILENCER	608-RKW		ROCKWOOD

SET #17.0 - CONFERENCE WD. DOOR / HM. FRAME

DOORS: 130

3 HINGES FULL MORTISE	TA2714 4-1/2"X4-1/2"	US26D	MCKINNEY
1 PASSAGE LATCH	AU 4701LN K402	626	YALE
1 SURFACE CLOSER	5801 TBGN134-47	689	YALE
1 WALL STOP	405	US26D	ROCKWOOD
3 SILENCER	608-RKW		ROCKWOOD

SET #17.1 - CONFERENCE WD. DOOR / HM. FRAME

DOORS: 113, 115

3 HINGES FULL MORTISE	TA2714 4-1/2"X4-1/2"	US26D	MCKINNEY
1 PASSAGE LATCH	AU 4701LN K402	626	YALE
1 SURFACE CLOSER	5801 TBGN134-47	689	YALE
1 WALL STOP	405	US26D	ROCKWOOD
1 ACOUSTICAL DOOR SEAL SET	PEMKOSTCSET-1E		PEMKO
3 SILENCER	608-RKW		ROCKWOOD

SET #18.0 - COURT B WD. DOOR / HM. FRAME

DOORS: 108

3 HINGES FULL MORTISE	TA2714 4-1/2"X4-1/2"	US26D	MCKINNEY
1 CLASSROOM LATCH	AU 4701LN K402	626	YALE
1 SURFACE CLOSER	5801 TBGN134-47	689	YALE
1 KICK PLATE	K1050 10"X34" 4BE CSK	US32D	ROCKWOOD
1 WALL STOP	405	US26D	ROCKWOOD
1 ACOUSTICAL DOOR SEAL SET	PEMKOSTCSET-1E		PEMKO
3 SILENCER	608-RKW		ROCKWOOD

SET #19.0 - IT/OFFICERS WD. DOOR / HM. FRAME

DOORS: 134, 146

3 HINGES FULL MORTISE	TA2714 4-1/2"X4-1/2"	US26D	MCKINNEY
1 STOREROOM LOCK	AU 4705LN K402	626	YALE
1 ELECTRIC STRIKE	1500-LMS	630	HES
1 CONNECTOR	2007M		HES
1 SURFACE CLOSER	5801 TBGN134-47	689	YALE
1 KICK PLATE	K1050 10"X34" 4BE CSK	US32D	ROCKWOOD
1 WALL STOP	405	US26D	ROCKWOOD
3 SILENCER	608-RKW		ROCKWOOD
1 POWER SUPPLY	AQL		SECURITRON

COORDINATE VOLTAGE, OPERATION AND ELECTRICAL CHARACTERISTICS WITH ALL RELATED TRADES.

DOOR POSITION SWITCHES, CREDENTIAL READER, REQUEST TO EXIT, WIRING AND CONNECTIONS BY SECURITY
CONTRACTOR.
OPERATION: ELECTRIC STRIKE FOR ACCESS CONTROL. DOOR IS NORMALLY CLOSED, LATCHED AND SECURED. INGRESS BY ACCESS CONTROL KEYPAD, FREE EGRESS AT ALL TIMES.

SET #19.1 - COURT B / HM. FRAME

DOORS: 140

3 HINGES FULL MORTISE	TA2714 4-1/2"X4-1/2"	US26D	MCKINNEY
1 STOREROOM LOCK	AU 4705LN K402	626	YALE
1 ELECTRIC STRIKE	1500-LMS	630	HES
1 CONNECTOR	2007M		HES
1 SURFACE CLOSER	5801 TBGN134-47	689	YALE
1 KICK PLATE	K1050 10"X34" 4BE CSK	US32D	ROCKWOOD
1 WALL STOP	409	US26D	ROCKWOOD
1 ACOUSTICAL DOOR SEAL SET	PEMKOSTCSET-1E		PEMKO
3 SILENCER	608-RKW		ROCKWOOD
1 POWER SUPPLY	AQL		SECURITRON

COORDINATE VOLTAGE, OPERATION AND ELECTRICAL CHARACTERISTICS WITH ALL RELATED TRADES.
DOOR POSITION SWITCHES, CREDENTIAL READER, REQUEST TO EXIT, WIRING AND CONNECTIONS BY SECURITY
CONTRACTOR.

OPERATION: ELECTRIC STRIKE FOR ACCESS CONTROL. DOOR IS NORMALLY CLOSED, LATCHED AND SECURED. INGRESS BY ACCESS CONTROL KEYPAD, FREE EGRESS AT ALL TIMES.

THE MCKINNEY PARTNERSHIP
architects

3600 West Main
Suite 200
Norman, Oklahoma
73072
405.360.1400 p
405.364.8287 f
tmparch.com

Seal:

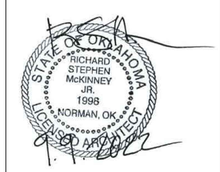

Project:

City of Norman
Municipal Complex Renovation
Municipal Court
321 N. Webster Avenue
Norman, OK

Issue Date:
11/15/22 ISSUED FOR BIDDING

Revisions:

Project Number:
CM083319

Sheet Title:
DOOR HARDWARE SCHEDULE

Sheet Number:
A8.1

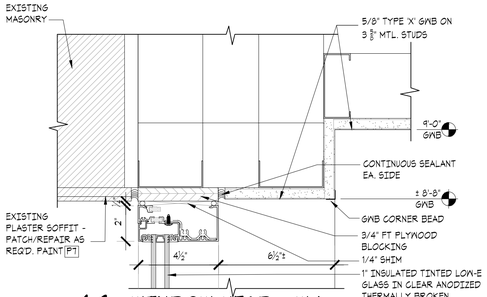

16 WINDOW HEAD - W4
SCALE: 3" = 1'-0"

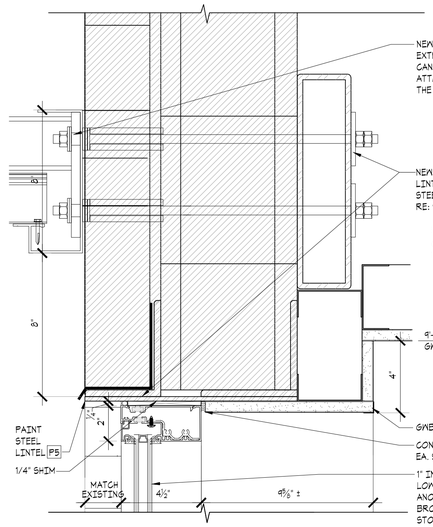

12 WINDOW HEAD - W1
SCALE: 3" = 1'-0"

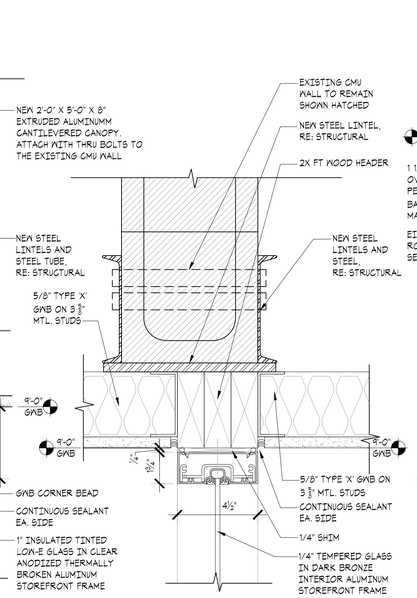

09 WINDOW HEAD - 100A, 100B
SCALE: 3" = 1'-0"

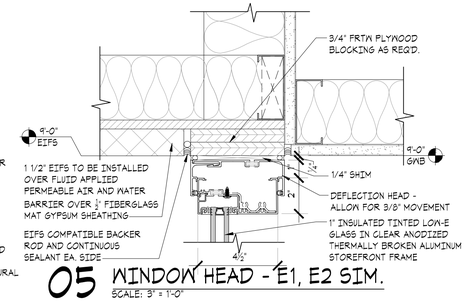

05 WINDOW HEAD - E1, E2 SIM.
SCALE: 3" = 1'-0"

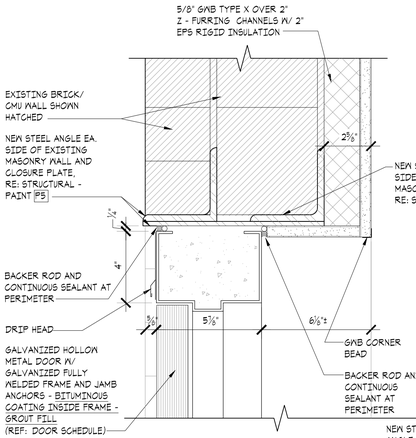

19 DOOR HEAD - E4
SCALE: 3" = 1'-0"

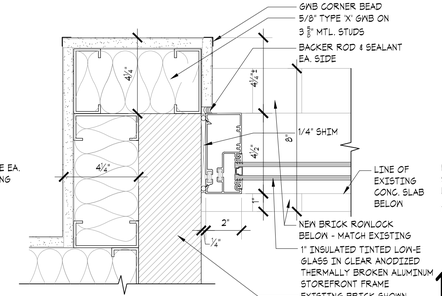

15 WINDOW JAMB - W4
SCALE: 3" = 1'-0"

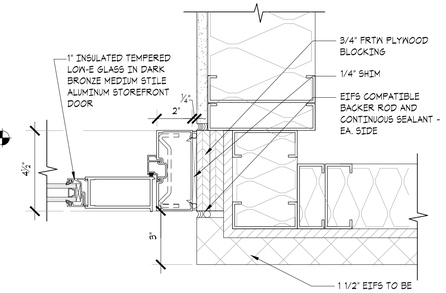

04 DOOR JAMB - E2
SCALE: 3" = 1'-0"

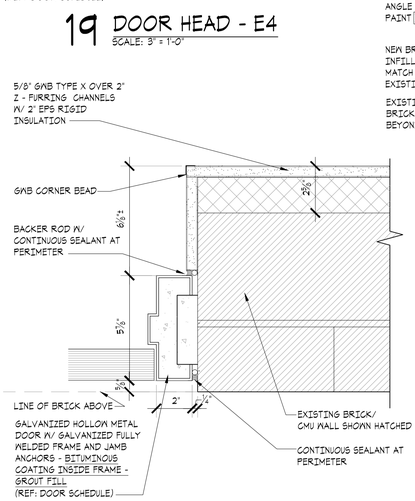

18 DOOR JAMB - E4
SCALE: 3" = 1'-0"

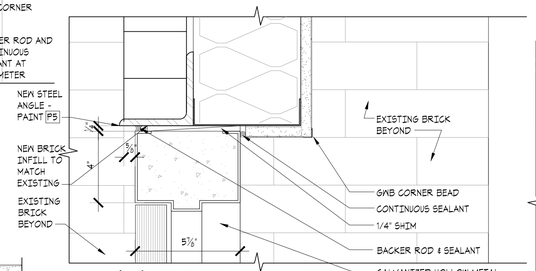

14 DOOR HEAD - E3
SCALE: 3" = 1'-0"

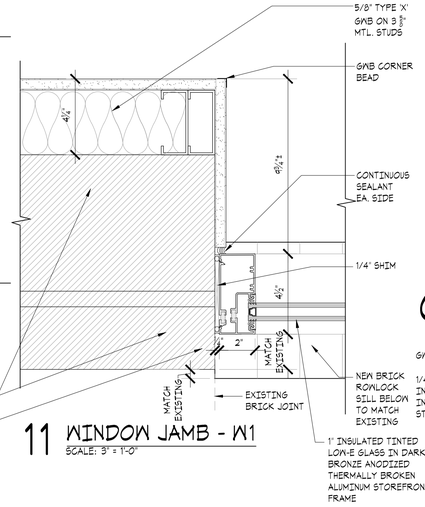

11 WINDOW JAMB - W1
SCALE: 3" = 1'-0"

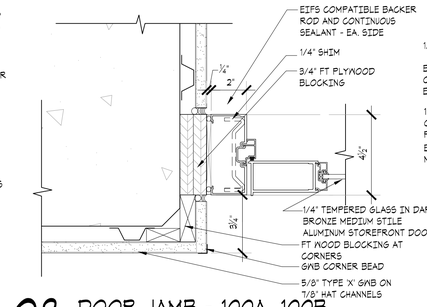

08 DOOR JAMB - 100A, 100B
SCALE: 3" = 1'-0"

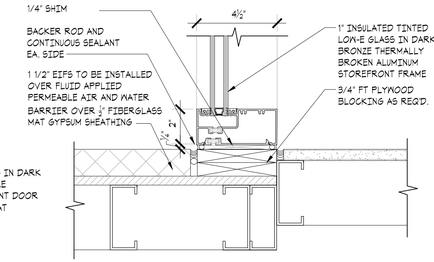

03 WINDOW JAMB - E1
SCALE: 3" = 1'-0"

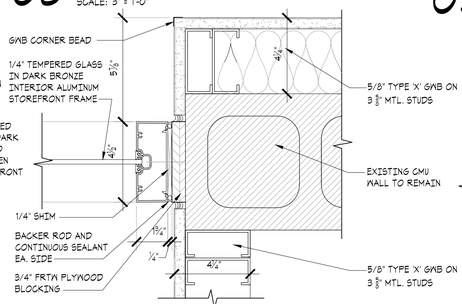

07 WINDOW JAMB - 100A, 100B
SCALE: 3" = 1'-0"

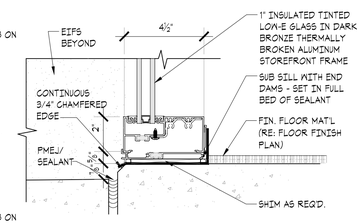

02 WINDOW SILL
SCALE: 3" = 1'-0"

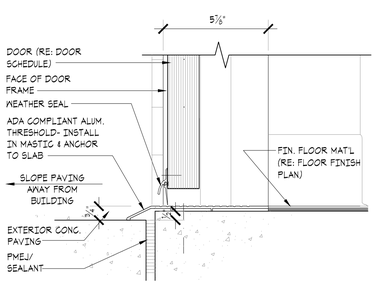

17 DOOR THRESHOLD - E3, E4
SCALE: 3" = 1'-0"

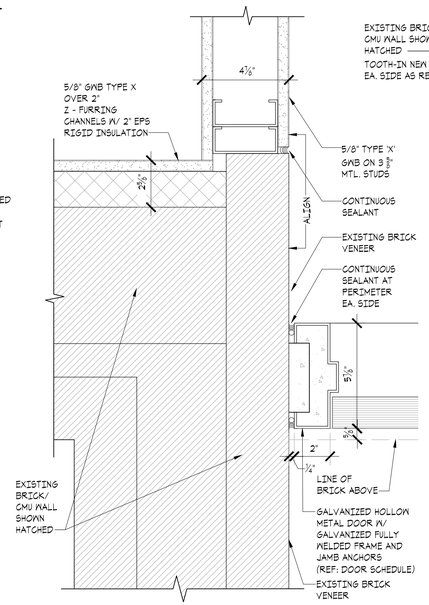

13 DOOR JAMB - E3
SCALE: 3" = 1'-0"

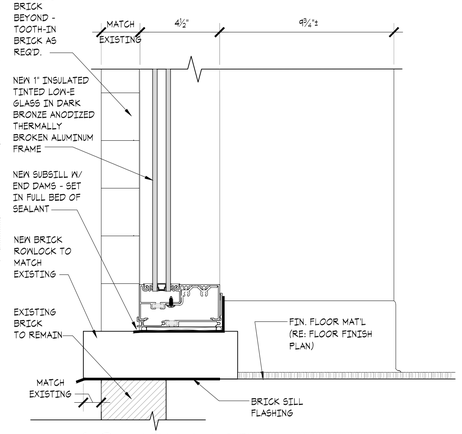

10 WINDOW SILL - W1, W4
SCALE: 3" = 1'-0"

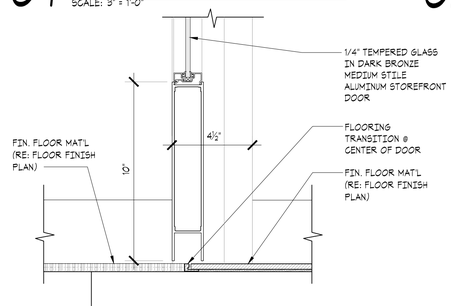

06 DOOR THRESHOLD - 100A, 100B
SCALE: 3" = 1'-0"

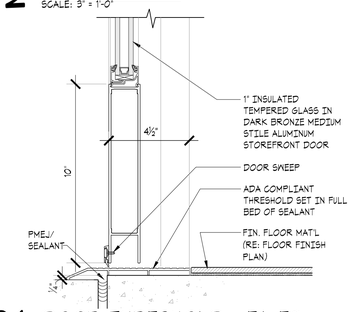

01 DOOR THRESHOLD - E1, E2
SCALE: 3" = 1'-0"

THE MCKINNEY PARTNERSHIP
architects

3600 West Main
Suite 200
Norman, Oklahoma
73072
405.360.1400 p
405.364.8287 f
tmparch.com

Seal:

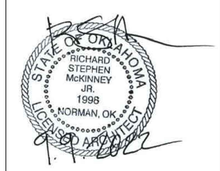

Project:

City of Norman
Municipal Complex Renovation
Municipal Court
321 N. Webster Avenue
Norman, OK

Issue Date:
11/15/22 ISSUED FOR BIDDING

Revisions:

Project Number:
CM083319

Sheet Title:
DOOR DETAILS

Sheet Number:
A8.2

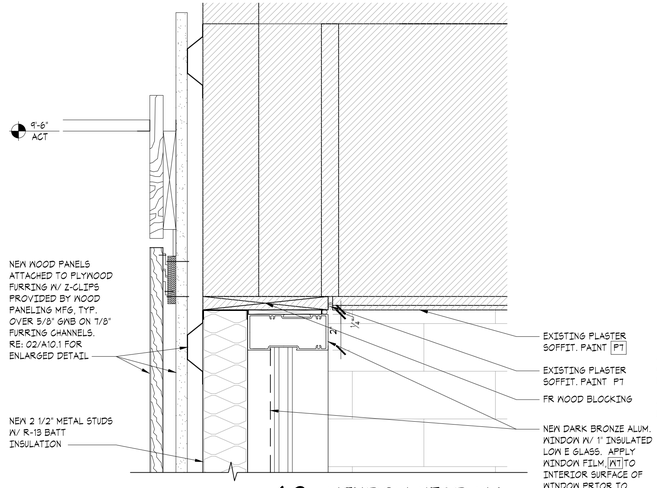

18 WINDOW HEAD W4
SCALE: 3" = 1'-0"

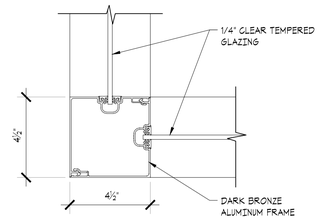

14 WINDOW JAMB
SCALE: 3" = 1'-0"

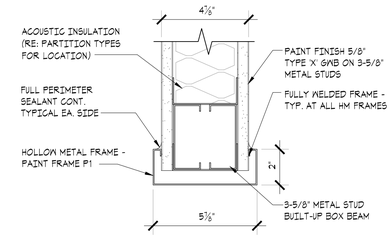

09 CASED OPENING HEAD
SCALE: 3" = 1'-0"

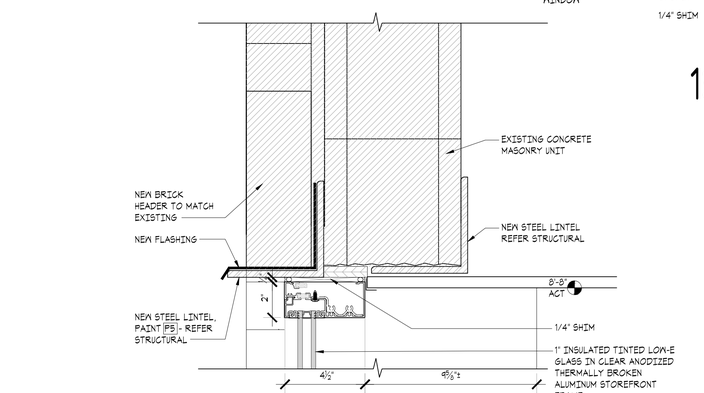

17 WINDOW HEAD W4
SCALE: 3" = 1'-0"

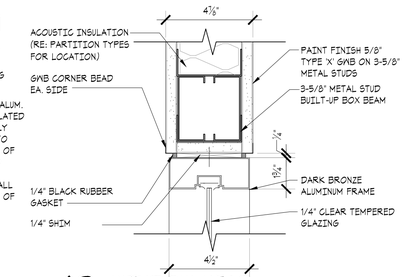

13 WINDOW HEAD
SCALE: 3" = 1'-0"

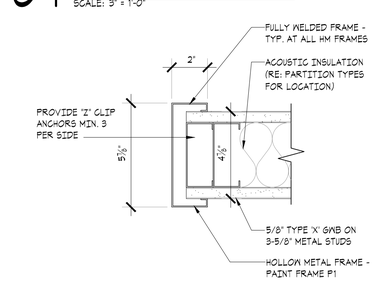

08 CASED OPENING JAMB
SCALE: 3" = 1'-0"

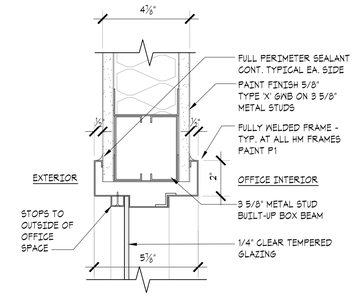

04 WINDOW HEAD
SCALE: 3" = 1'-0"

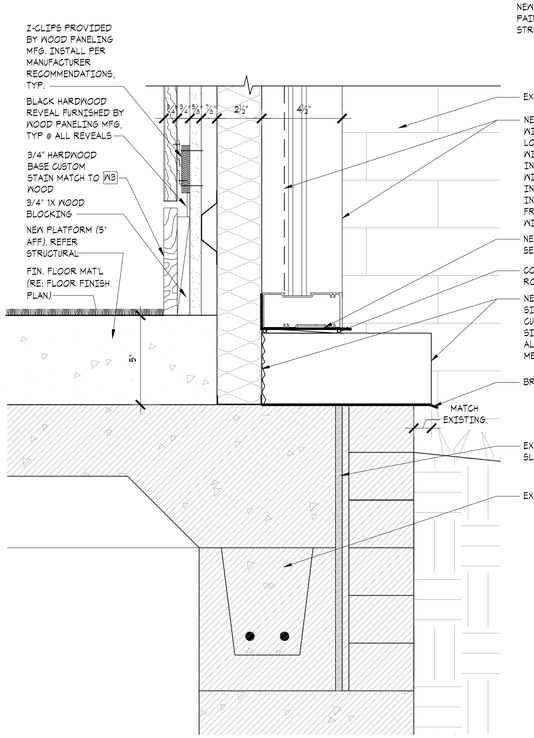

19 WINDOW SILL
SCALE: 3" = 1'-0"

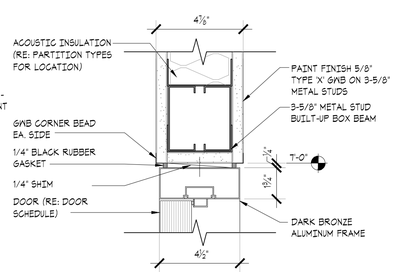

16 DOOR HEAD
SCALE: 3" = 1'-0"

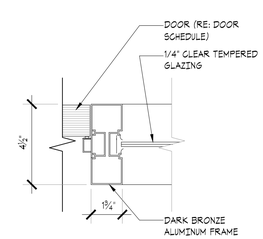

11 DOOR JAMB AT WINDOW
SCALE: 3" = 1'-0"

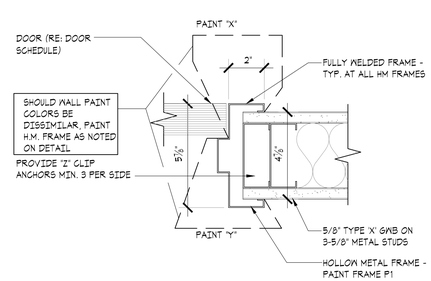

06 DOOR JAMB
SCALE: 3" = 1'-0"

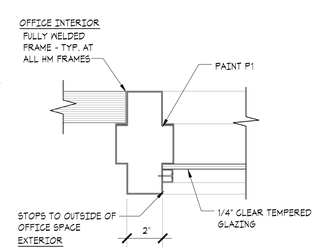

02 WINDOW/DOOR JAMB
SCALE: 3" = 1'-0"

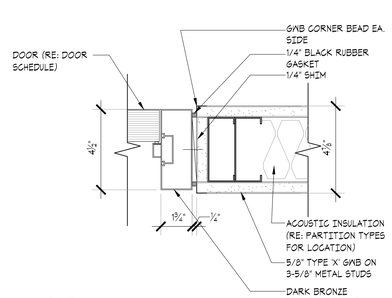

15 DOOR JAMB
SCALE: 3" = 1'-0"

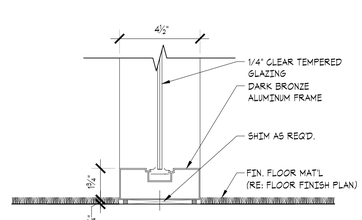

10 WINDOW SILL
SCALE: 3" = 1'-0"

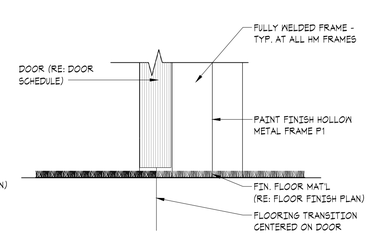

05 DOOR THRESHOLD
SCALE: 3" = 1'-0"

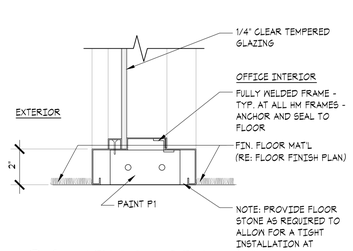

01 WINDOW SILL
SCALE: 3" = 1'-0"

THE MCKINNEY PARTNERSHIP
architects

3600 West Main
Suite 200
Norman, Oklahoma
73072
405.360.1400 p
405.364.8287 f
tmparch.com

Seal:

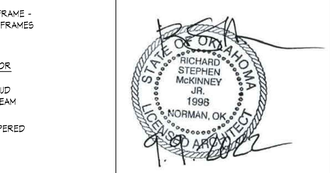

Project:

City of Norman
Municipal Complex Renovation
Municipal Court
321 N. Webster Avenue
Norman, OK

Issue Date:
11/15/22 ISSUED FOR BIDDING

Revisions:

Project Number:
CM083319

Sheet Title:
DOOR DETAILS

Sheet Number:
A8.3

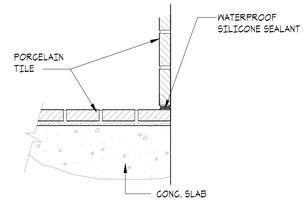

F

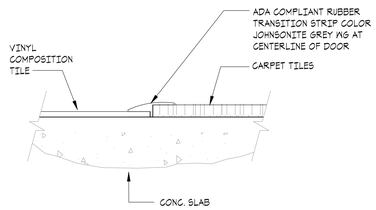

E

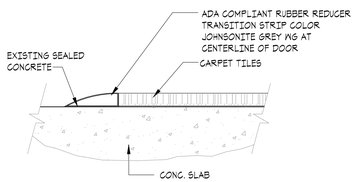

D

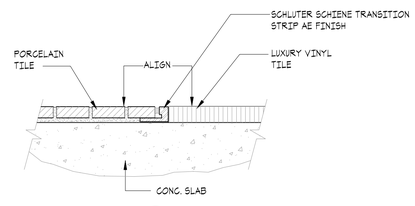

C

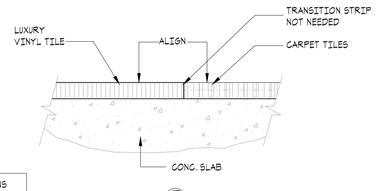

B

ALL FLOORING TRANSITIONS TO OCCUR AT CENTERLINE OF DOOR

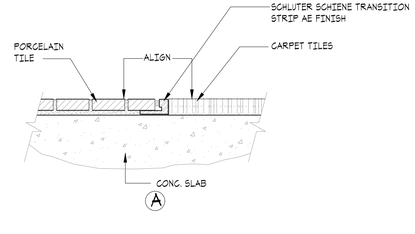

A

01 FLOOR TRANSITION DETAILS
SCALE: HALF SCALE

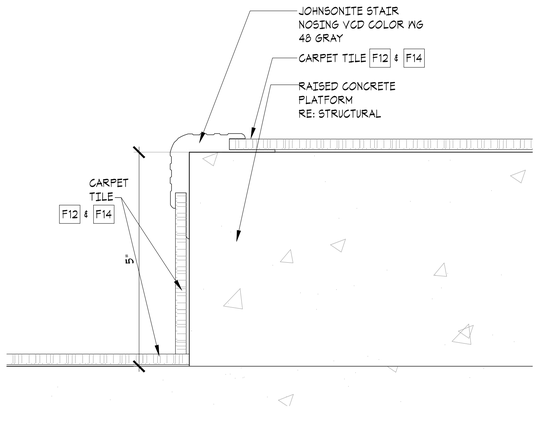

02 STAIR NOSING DETAIL
SCALE: HALF SCALE

MATERIAL FINISH NOTES

1. THE GENERAL CONTRACTOR SHALL BE RESPONSIBLE FOR PROPER PREPARATION OF ALL NEW AND EXISTING SURFACES IN A SATISFACTORY MANNER TO RECEIVE NEW FINISHES. THIS INCLUDES THE DEMOLITION AND REMOVAL OF NECESSARY ITEMS. TOUCH-UP AND/OR REFINISH OF SURFACES DAMAGED BY SUBSEQUENT WORK SHALL BE THE RESPONSIBILITY OF THE GENERAL CONTRACTOR. ALL WORK SHALL BE PERFORMED IN CONFORMANCE WITH THE MANUFACTURER'S RECOMMENDED INSTALLATION METHODS. THE GENERAL CONTRACTOR SHALL PREPARE THE FLOOR PRIOR TO THE APPLICATION OF FINISH FLOORING. THE CONCRETE SLAB MUST BE SMOOTH AND LEVEL TO WITHIN A TOLERANCE OF ONE-EIGHTH INCH PER FOOT. LATEX CEMENT PATCHING COMPOUND SHALL BE UTILIZED (NO ASPHALT BASED COMPOUNDS).
2. ALL SURFACES WHICH ARE TO RECEIVE A PAINT FINISH SHALL BE PRIMED AND FINISHED IN ACCORDANCE WITH THE WRITTEN SPECIFICATIONS.
3. ALL JOINTS IN GYPSUM BOARD WALLS SHALL BE FINISHED WITH PAPER TAPE 2" WIDE AND THREE COATS OF VINYL, DRY OR PREMIXED JOINT COMPOUND. ALL OUTSIDE CORNERS SHALL BE FINISHED WITH METAL CORNER BEADS, TAPED AND SPACKLED. JUST PRIOR TO THE APPLICATION OF THE FIRST COAT OF PAINT, WIPE SANDED SURFACES WITH A DAMP CLOTH IN ORDER TO LAY FLAT ANY NAP WHICH MAY HAVE FORMED IN SANDING.
4. FINISH FLOORING INSTALLATION SHALL BE IN CONFORMANCE WITH THE MANUFACTURER'S RECOMMENDED INSTALLATION GUIDELINES. COORDINATE THE INSTALLATION WITH OTHER TRADES, SUCH AS ELECTRICAL.
5. ALL JOINTS BETWEEN MATERIALS TO BE TIGHT AND CONSTRUCTED IN A NEAT WORKMANLIKE MANNER.
6. ALL FINISHES SHALL BE TOUCHED UP TO CORRECT ANY IMPERFECTIONS AFTER INSTALLATION. FIXTURE CONTRACTOR SHALL PROVIDE TO THE GENERAL CONTRACTOR ALL MATERIALS FOR TOUCH UP WORK.
7. THE INTENT OF THE FINISH SPECIFICATION IS TO PROVIDE A SATISFACTORY FINISH TO ALL PARTS OF THE WORK. COVER ALL SURFACES THOROUGHLY. IF THE SPECIFIED NUMBER OF COATS DOES NOT ACCOMPLISH THE INTENT, THE GENERAL CONTRACTOR SHALL BE RESPONSIBLE FOR THE APPLICATION OF ADDITIONAL COATS OF THE SPECIFIED MATERIAL TO GIVE SATISFACTORY COVERAGE.
8. UPON COMPLETION OF CARPET INSTALLATION, PROVIDE (10) EXTRA TILES OF EACH TYPE.
9. UPON COMPLETION OF PAINTING, PROVIDE NOT LESS THAN ONE GALLON OF EACH COLOR OF EACH FINISH USED, LABELED W/ FINISH DESIGNATIONS INDICATED ON FINISH SCHEDULE.
10. UPON COMPLETION, PROVIDE (1) FULL BOX OF EXTRA CEILING TILES.
11. CLEAN ALL GLASS SURFACES WITH LIQUID DETERGENT AT PROJECT COMPLETION.
12. ALL WALLS AND CEILINGS TO BE PAINTED P1, U.O.N.
13. ALL HM FRAMES AND DOORS TO BE PAINTED P1, U.O.N.
14. ALL RUBBER ACCESSORIES TO BE JOHNSONITE COLOR GREY #G 48.
15. ALL PORCELAIN & CERAMIC TILE JOINTS TO BE MAX 1/8".
16. UPON COMPLETION OF LVT INSTALLATION, PROVIDE (20) EXTRA TILES OF EACH TYPE.

FINISH SCHEDULE

MARK	MATERIAL	MANUFACTURER	DESCRIPTION/CATALOG NO.
F1	LUXURY VINYL TILE	SHAW CONTRACT GROUP LISA TODD 405-850-2832	STYLE: SOUNDSCAPE COLOR: INK 69544 SIZE: 6" X 48" INSTALLATION: STAGGER
F2	WALK OFF CARPET TILE	SHAW CONTRACT GROUP LISA TODD 405-850-2832	STYLE: STEPPIN OUT ENTREE TILE COLOR: STERLING 31551 SIZE: 24" X 24" INSTALLATION: QUARTER TURN
F3	PORCELAIN TILE	ELEGANZA TILE CHRIST BOTELLO 405-412-5406	STYLE: ELEGANZA TILE NOVA, MATTE FINISH SIZE: 12" X 24" COLOR: SILVER INSTALLATION: STACK BOND GROUT: LATICRETE #4 SMOKE GREY
F4	SEALED CONCRETE	SHERWIN WILLIAMS	H&C HYDRO DEFEND CONCRETE & MASONRY WATERPROOF CLEAR SEALER
F5	VINYL COMP. TILE	ARMSTRONG FLOORING ANGELA DITMORE 469-478-4088	12"X12" STANDARD EXCELON TILE COLOR: 51861 SOFT WARM GRAY
F6	CARPET TILE	SHAW CONTRACT GROUP LISA TODD 405-850-2832	STYLE: ASSEMBLY COLLECTION CONVENE TILE COLOR: RADIANT LINK 64856 SIZE: 12" X 48" INSTALLATION: REFER PLAN
F7	CARPET TILE	SHAW CONTRACT GROUP LISA TODD 405-850-2832	STYLE: ASSEMBLY COLLECTION CONVENE TILE COLOR: CLEAR LINK 67558 SIZE: 12" X 48" INSTALLATION: REFER PLAN
F8	NOT USED		
F9	NOT USED		
F10	CARPET TILE	SHAW CONTRACT GROUP LISA TODD 405-850-2832	STYLE: ASSEMBLY COLLECTION ESTABLISH TILE COLOR: LINK 67559 SIZE: 12" X 48" INSTALLATION: REFER PLAN
F11	CARPET TILE	SHAW CONTRACT GROUP LISA TODD 405-850-2832	STYLE: LIVING SYSTEMS COLLECTION OBSERVE COLOR TILE COLOR: WILD FLORA 05411 SIZE: 4" X 36" INSTALLATION: REFER PLAN
F12	CARPET TILE	SHAW CONTRACT GROUP LISA TODD 405-850-2832	STYLE: LIVING SYSTEMS COLLECTION OBSERVE TILE COLOR: WILD 05551 SIZE: 4" X 36" INSTALLATION: REFER PLAN
F13	CARPET TILE	SHAW CONTRACT GROUP LISA TODD 405-850-2832	STYLE: LIVING SYSTEMS COLLECTION TRANSFORM COLOR TILE COLOR: WILD FLORA 05411 SIZE: 4" X 36" INSTALLATION: REFER PLAN
F14	CARPET TILE	SHAW CONTRACT GROUP LISA TODD 405-850-2832	STYLE: LIVING SYSTEMS COLLECTION TRANSFORM TILE COLOR: WILD 05551 SIZE: 4" X 36" INSTALLATION: REFER PLAN
B1	RUBBER BASE	JONSONITE ANGIE KERSCHEN 405-590-3128	TRADITIONAL 4" H, GREY #G 48
B2	PORCELAIN BASE	ELEGANZA TILE CHRIST BOTELLO 405-412-5406	STYLE: ELEGANZA TILE NOVA, MATTE FINISH SIZE: 4" X 24" BULLNOSE COLOR: SILVER INSTALLATION: STACK BOND GROUT: LATICRETE #4 SMOKE GREY
B3	HARDWOOD BASE	CUSTOM	6" H X 3/4" D., STAIN TO MATCH W3
P1	PAINT	SHERWIN WILLIAMS	SW 7005 PURE WHITE STANDARD WALL AND CEILING (SATIN @ WALLS, FLAT @ CEILINGS, SEMI-GLOSS @ METAL)
P2	PAINT	SHERWIN WILLIAMS	SW 7069 GREY MATTERS ACCENT WALL AND CEILING (SATIN @ WALLS, FLAT @ CEILINGS, SEMI-GLOSS @ METAL)
P3	PAINT	SHERWIN WILLIAMS	SW 6531 INDIGO ACCENT WALL AND CEILING (SATIN @ WALLS, FLAT @ CEILINGS, SEMI-GLOSS @ METAL)
P4	PAINT	SHERWIN WILLIAMS	SW 6594 POINSETTA ACCENT WALL AND CEILING (SATIN @ WALLS, FLAT @ CEILINGS, SEMI-GLOSS @ METAL)
P5	PAINT	SHERWIN WILLIAMS	SW 7675, SEAL SKIN EXTERIOR BRICK, LINTELS, EXTERIOR DOOR FRAMES (SATIN @ WALLS, FLAT @ CEILINGS, SEMI-GLOSS @ METAL)
P6	PAINT	SHERWIN WILLIAMS	ACCENT WALL AND CEILING (SATIN @ WALLS, FLAT @ CEILINGS, SEMI-GLOSS @ METAL)
P7	PAINT	SHERWIN WILLIAMS	SW 9173 SHIITAKE EXISTING EXTERIOR PLASTER SOFFIT FLAT, EXTERIOR PAINT
P8	NOT USED		
Q1	QUARTZ	WILSONART KELLEY LYTLE 405-618-0343	MADEIRA BEACH Q4054 2 CM THICK WITH BASED EDGE - REFER 04A/A10.2
L1	PLASTIC LAMINATE	WILSONART KELLEY LYTLE 405-618-0343	WALNUT HEIGHTS 7965K-12
L2	PLASTIC LAMINATE	NEVAMAR STEPHANIE LAVOIE 207-784-9111	EASY ELEGANCE VA5002T TEXTURED
W1	WALL TILE	ELEGANZA TILE CHRIST BOTELLO 405-412-5406	STYLE: ELEGANZA TILE NOVA, MATTE FINISH SIZE: 12" X 24" COLOR: SILVER INSTALLATION: STACK BOND GROUT: LATICRETE #4 SMOKE GREY
W2	CERAMIC WALL TILE	VIRGINIA TILE TY SANDOVAL 405-443-6114	STYLE: ANATOLIA MARLOW SIZE: 9" X 12" COLOR: CLOUD GLOSSY INSTALLATION: STACK BOND GROUT: MAPEI #4 IVORY
W3	FLAT VENEER PANEL	RULON INTERNATIONAL MICHAEL KOLMAN 404-584-1400	WALNUT WITH CUSTOM FINISH GRAIN TO RUN HORIZONTAL PROVIDE SAMPLE FOR ARCHITECT'S REVIEW
W4	HARDWOOD TRIM	CUSTOM	STAIN TO MATCH (W3) - PROVIDE SAMPLE FOR ARCHITECT'S REVIEW
W5	WINDOW FILM	AVERY DENNISON	SC 900 861-W ETCHMARK 48"H
W6	WINDOW SHADES SYSTEM	SWF CONTRACT	DOUBLE-TAKE T500 5% OPENNESS MANUAL COLOR: I5504 WHITE/GREY FASCIA COLOR: DARK BRONZE TYP. AT ALL EXTERIOR WINDOW LOCATIONS - FIELD VERIFY SIZES
W7	OPAQUE WINDOW FILM	3M WINDOW FILMS	BLOCKOUT 3635, 22B, OPAQUE WINDOW FILM, BLACK MATTE
C1	ACT	USG CEILINGS TONY MELCH 405-473-8101	ORION # 62136 2'-0" X 2'-0" SQUARE EDGE, WHITE, WHITE DONN DX/DXL 15/16" GRID
TP1	TOILET PARTITIONS	SCRANTON PRODUCTS	HINY HIDERS COLOR: SHALE FINISH: ORANGE PEEL
GS1	CORNER GUARDS	INPRO	150 HIGH IMPACT CORNER GUARD COLOR: FEATHER, 0239 SIZE: 48" H. - INSTALL CORNER GUARD 12" AFF

THE MCKINNEY PARTNERSHIP
architects

3600 West Main
Suite 200
Norman, Oklahoma
73072
405.360.1400 p
405.364.8287 f
tmparch.com

Seal:

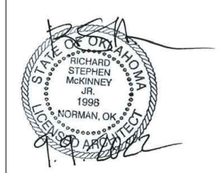

Project:

City of Norman
Municipal Complex Renovation
Municipal Court
321 N. Webster Avenue
Norman, OK

Issue Date:
11/15/22 ISSUED FOR BIDDING

Revisions:

Project Number:
CM083319

Sheet Title:
FINISH SCHEDULE, DETAILS

Sheet Number:
A9.0

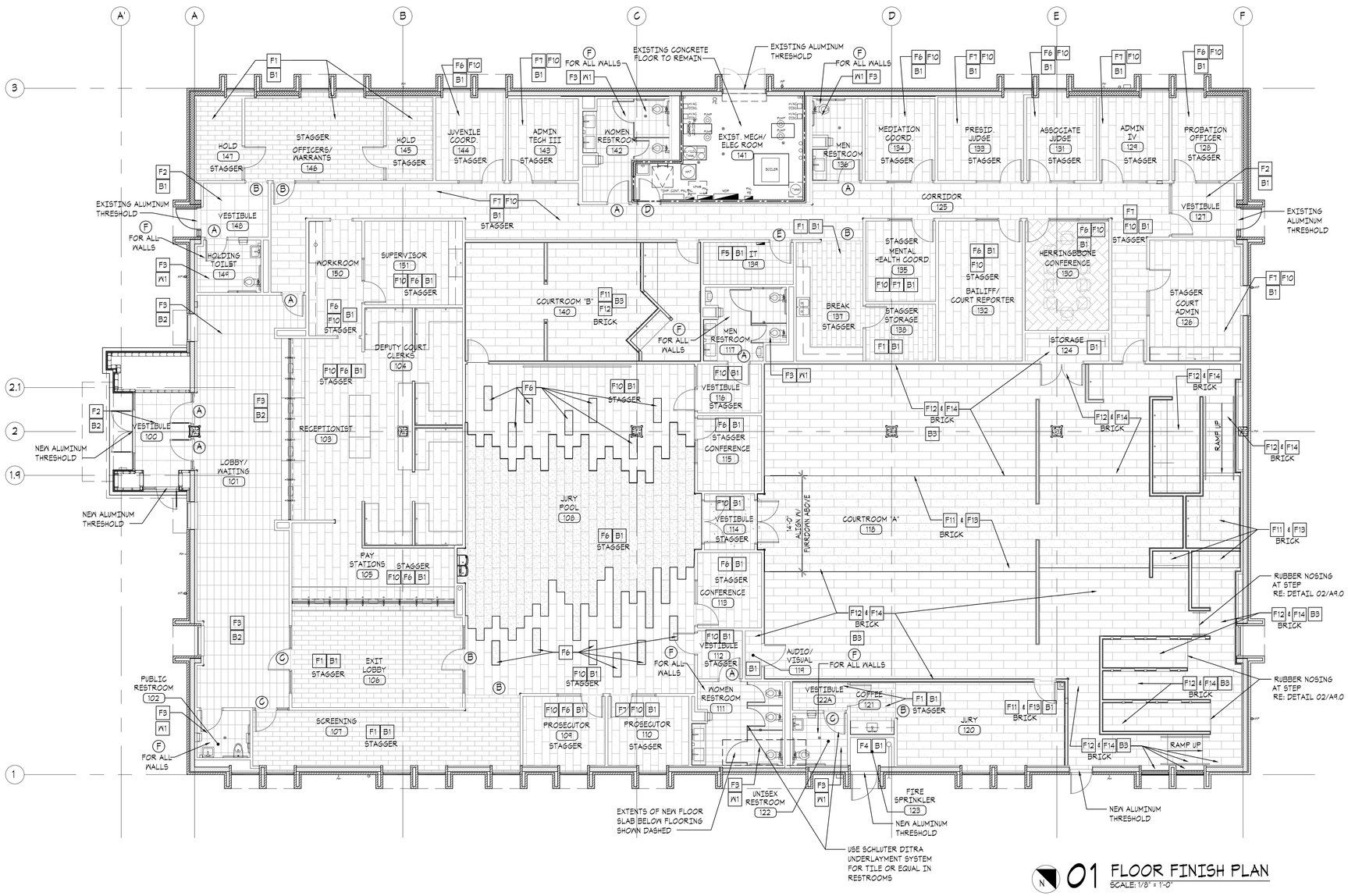

01 FLOOR FINISH PLAN
SCALE: 1/8" = 1'-0"

THE MCKINNEY PARTNERSHIP
architects

3600 West Main
Suite 200
Norman, Oklahoma
73072
405.360.1400 p
405.364.8287 f
tmparch.com

Seal:

STATE OF OKLAHOMA
RICHARD STEPHEN McKINNEY JR.
1998
NORMAN, OK.
LICENSED ARCHITECT

Project:

City of Norman
Municipal Complex Renovation
Municipal Court
321 N. Webster Avenue
Norman, OK

Issue Date:
11/15/22 ISSUED FOR BIDDING

Revisions:

Project Number:
CM083319

Sheet Title:
FLOOR FINISH PLAN

Sheet Number:
A9.1

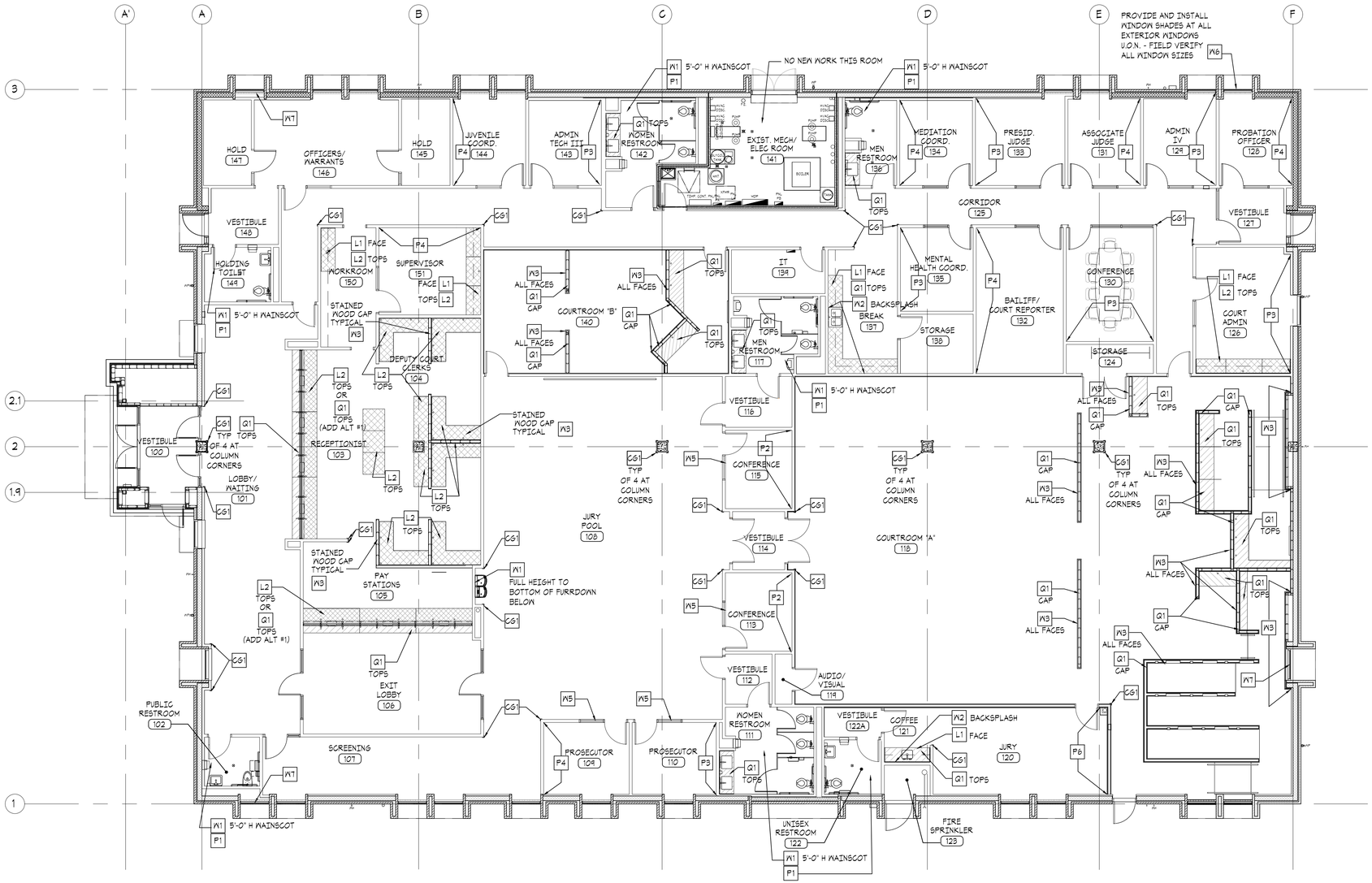

LEGEND

QUARTZ

PLASTIC LAMINATE

1. ALL WALLS PAINTED P1 U.O.N. REFER FINISH SCHEDULE ON SHEET A9.0

01 WALL FINISH PLAN

SCALE: 1/8" = 1'-0"

THE MCKINNEY PARTNERSHIP
architects

3600 West Main
Suite 200
Norman, Oklahoma
73072
405.360.1400 p
405.364.8287 f
tmparch.com

Seal:

STATE OF OKLAHOMA
RICHARD STEPHEN McKINNEY JR.
1998
NORMAN, OK
LICENSED ARCHITECT

Project:

City of Norman
Municipal Complex Renovation
Municipal Court
321 N. Webster Avenue
Norman, OK

Issue Date:
11/15/22 ISSUED FOR BIDDING

Revisions:

Project Number:
CM083319

Sheet Title:
WALL FINISH PLAN

Sheet Number:
A9.2

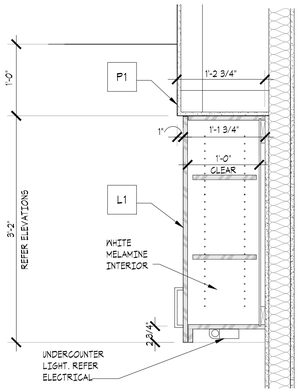

11 MILLWORK SECTION - UPPER
SCALE: 1" = 1'-0"

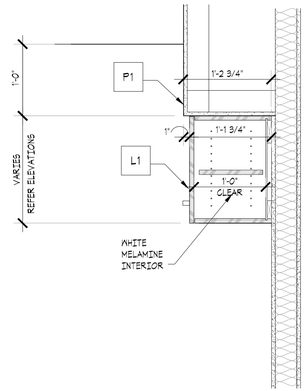

10 MILLWORK SECTION - UPPER
SCALE: 1" = 1'-0"

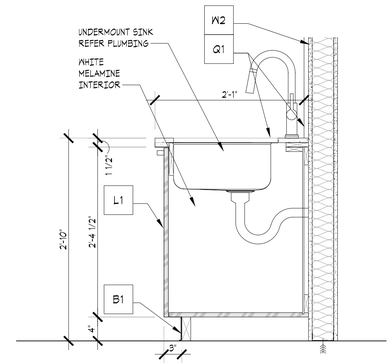

09 MILLWORK SECTION - SINK
SCALE: 1" = 1'-0"

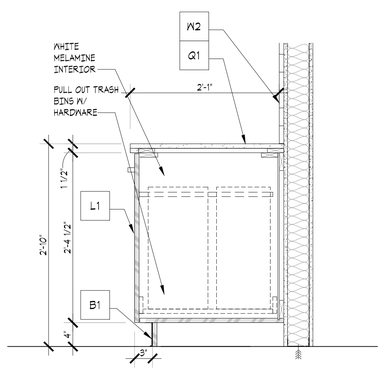

07 MILLWORK SECTION - TRASH
SCALE: 1" = 1'-0"

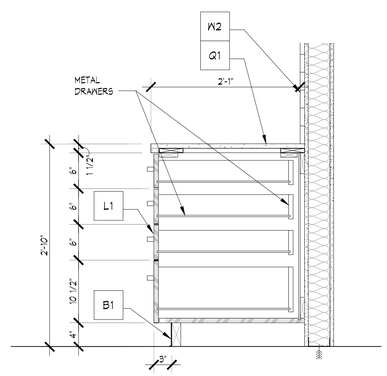

06 MILLWORK SECTION - DRAWERS
SCALE: 1" = 1'-0"

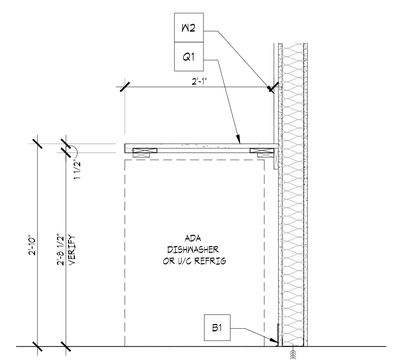

05 MILLWORK SECTION - DISHWASHER
SCALE: 1" = 1'-0"

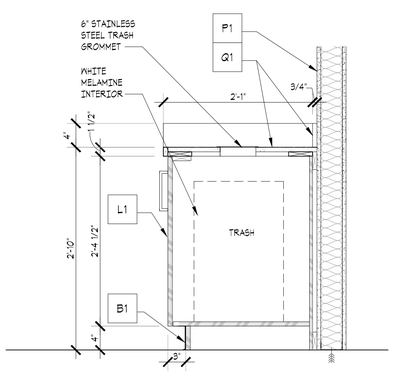

04 MILLWORK SECTION - TRASH
SCALE: 1" = 1'-0"

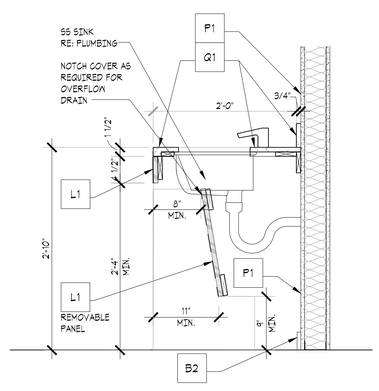

03 MILLWORK SECTION - LAVATORY
SCALE: 1" = 1'-0"

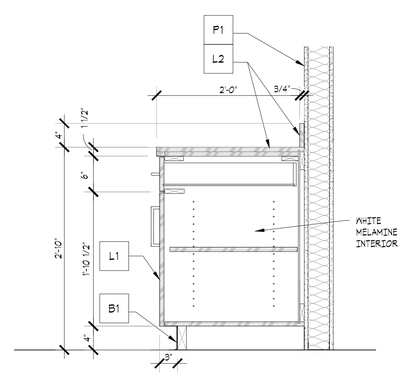

02 MILLWORK SECTION -BASE CABINET
SCALE: 1" = 1'-0"

01 NOT USED
SCALE: 1" = 1'-0"

GENERAL MILLWORK NOTES:

1. CONTRACTOR SHALL FIELD VERIFY ALL DIMENSIONS AND CONDITIONS PRIOR TO COMMENCING ANY WORK. THE ARCHITECT SHALL BE NOTIFIED OF ANY AND ALL DISCREPANCIES.
2. CONTRACTOR SHALL VERIFY DIMENSIONS OF OWNERS EQUIPMENT PRIOR TO CONSTRUCTION AND SHALL VERIFY ANY REQUIRED CLEARANCES.
3. PROVIDE F.R. WOOD CONTINUOUS BLOCKING AS REQUIRED.
4. A MAXIMUM OF 1/8" SHALL OCCUR BETWEEN ALL DRAWERS AND DOOR FRONTS.
5. ENCLOSED CABINET BACKS TO BE ONE SIDED WHITE MELAMINE ON 1/4" MDF PANELS TYPICAL.
6. ALL ATTACHMENT SCREWS SHALL MATCH FINISH OF CORRESPONDING HARDWARE.
7. REFER FINISH SCHEDULE FOR FINISH TYPES.
8. ALL BASE AND UPPER CABINETS TO BE PLASTIC LAMINATE VENEER ON 3/4" PARTICLEBOARD WITH MATCHING TAPE EDGES.
9. PLASTIC LAMINATE WOODGRAIN TO BE RUN VERTICAL AT ALL MILLWORK LOCATIONS. USE SAME SHEET FOR DRAWER ABOVE DOOR.
10. DOOR & DRAWER FRONTS AND BULKHEADS TO BE PLASTIC LAMINATE VENEER FRONTS ON LUMBER CORE PLYWOOD. USED GRASS DRAWER GLIDE SYSTEM OR EQUAL w/ 1/2" WHITE MELAMINE BOTTOM. PROVIDE SILICONE SILENCER PADS AND EPCO BP-048-SN 6" BAR PULL OR EQUAL, TYPICAL. SATIN STAINLESS STEEL. DRAWERS TO BE FULL DEPTH OF FRONT.
11. ALL ENCLOSED SHELVING (FIXED & ADJUSTABLE) THAT IS CONCEALED FROM VIEW BY DOORS TO BE TWO SIDED WHITE MELAMINE ON 3/4" PARTICLEBOARD WITH MATCHING TAPE EDGE 3 SIDES.
12. ALL EXPOSED SHELVING (FIXED & ADJUSTABLE) TO BE PLASTIC LAMINATE VENEER ON 3/4" PARTICLEBOARD WITH MATCHING TAPE EDGE TAPE THREE SIDES.
13. ALL CABINET DOORS TO BE PLASTIC LAMINATE VENEER ON 3/4" MDF WITH MATCHING EDGE TAPE FOUR SIDES.
14. ALL DRAWERS TO BE METAL DRAWER SYSTEM-BLUM METABOX OR EQUAL. DRAWER FRONTS AND TO BE PLASTIC LAMINATE VENEER ON 3/4" MDF WITH MATCHING EDGE TAPE FOUR SIDES.
15. PLASTIC LAMINATE COUNTERTOPS AND BACKSPLASHES TO BE PLASTIC LAMINATE ON 3/4" PARTICLEBOARD WITH 1 1/2" NOSING-REFER MILLWORK SECTIONS. SEAL PLASTIC LAMINATE SPLASH/COUNTER/AND WALL JOINTS WITH CLEAR SILICONE.
16. PLASTIC LAMINATE COUNTERTOPS AND BACKSPLASHES IN WET AREAS TO BE PLASTIC LAMINATE ON 3/4" WATERPROOF PLYWOOD WITH 1 1/2" NOSING-REFER MILLWORK SECTIONS. SEAL PLASTIC LAMINATE SPLASH/COUNTER/AND WALL JOINTS WITH CLEAR SILICONE.
17. QUARTZ COUNTERTOPS TO BE 2CM MATERIAL ON 3/4" WATERPROOF PLYWOOD. EDGE TO BE EASED-REFER DRAWINGS FOR EDGE DIMENSION.]
18. PROVIDE 5mm HOLES IN BULKHEADS FOR SHELFS-PROVIDE FOUR (4) 5MM SHELF SUPPORTS AT EACH SHELF.
19. PROVIDE HEAVY DUTY SELF-CLOSING CONCEALED 120 DEGREE EUROPEAN HINGES-BLUM OR EQUAL.
20. ALL CABINET PULLS TO BE EPCO BP-096-SN 6" BAR PULL OR EQUAL. SATIN STAINLESS STEEL.
21. PROVIDE CLEAR SILICONE SILENCER PADS ON ALL DOORS AND DRAWERS.
22. PROVIDE 6" DIAMETER X 2" DEEP SATIN S.S. GROMMET OVER TRASH RECEPTACLE AND OVER RECYCLING RECEPTACLE IN COUNTERTOP-DOUG MOCKET TM1B OR EQUAL, TYPICAL.
23. PULL OUT TRASH/RECYCLING TO BE HAFELE PULL-OUT DOUBLE TRASH CANS, BOTTOM MOUNT WITH SOFT & SILENT CLOSING - 2 X 52 QT (2 X 13 GAL), MINIMUM CABINET OPENING: 15-5/8" WIDE OR EQUAL, TYPICAL.
24. PROVIDE TRASH & RECYCLING RECEPTACLES TO FIT CABINETS.
25. INSTALL COUNTER SUPPORTS @ MAX. 4'-0" O.C. ON ALL UNSUPPORTED COUNTERTOPS. DOUG MOCKETT SN54, WHITE OR EQUAL.
26. MILLWORK CABINET BASES AT ALL LOCATIONS WITH QUARTZ COUNTERTOPS TO BE 3/4" HIGHER TO ACCOUNT FOR LACK OF SUBSTRATE. REFER TO MILLWORK SECTIONS FOR HEIGHTS OF BASE, EXCLUDING COUNTERTOPS. CONSTRUCT ALL BASES TO MAINTAIN FINISHED HEIGHTS (INCLUDING COUNTERTOPS) FOR ALL CABINETS.

THE MCKINNEY PARTNERSHIP
architects

3600 West Main
Suite 200
Norman, Oklahoma
73072
405.360.1400 p
405.364.8287 f
tmparch.com

Seal:

Project:

City of Norman
Municipal Complex Renovation
Municipal Court
321 N. Webster Avenue
Norman, OK

Issue Date:
11/15/22 ISSUED FOR BIDDING

Revisions:

Project Number:
CM083319

Sheet Title:
MILLWORK SECTIONS

Sheet Number:
A10.0

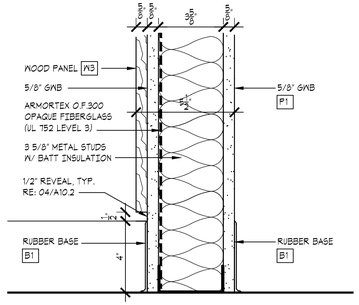

05A MILLWORK DETAIL - BASE @ EXIT LOBBY 106
SCALE: 3" = 1'-0"

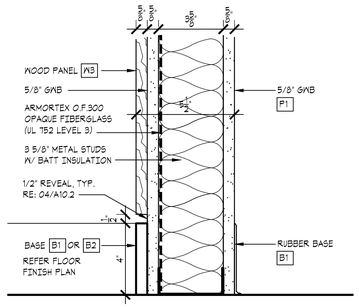

05 MILLWORK DETAIL - BASE @ LOBBY/WAITING 101
SCALE: 3" = 1'-0"

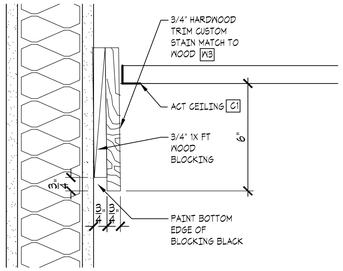

04 MILLWORK DETAIL - WOOD TRIM
SCALE: 3" = 1'-0"

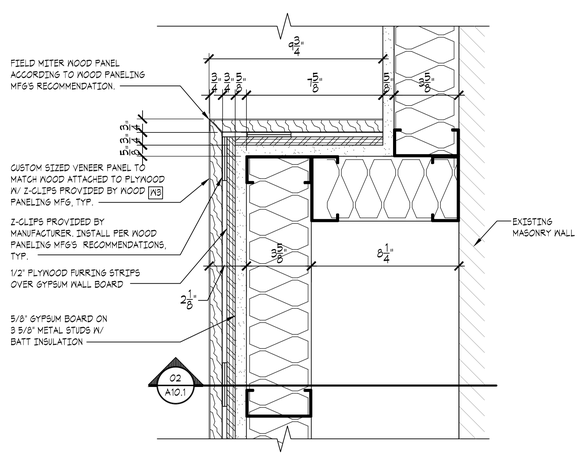

03 MILLWORK PLAN DETAIL - WOOD WALL PANEL
SCALE: 3" = 1'-0"

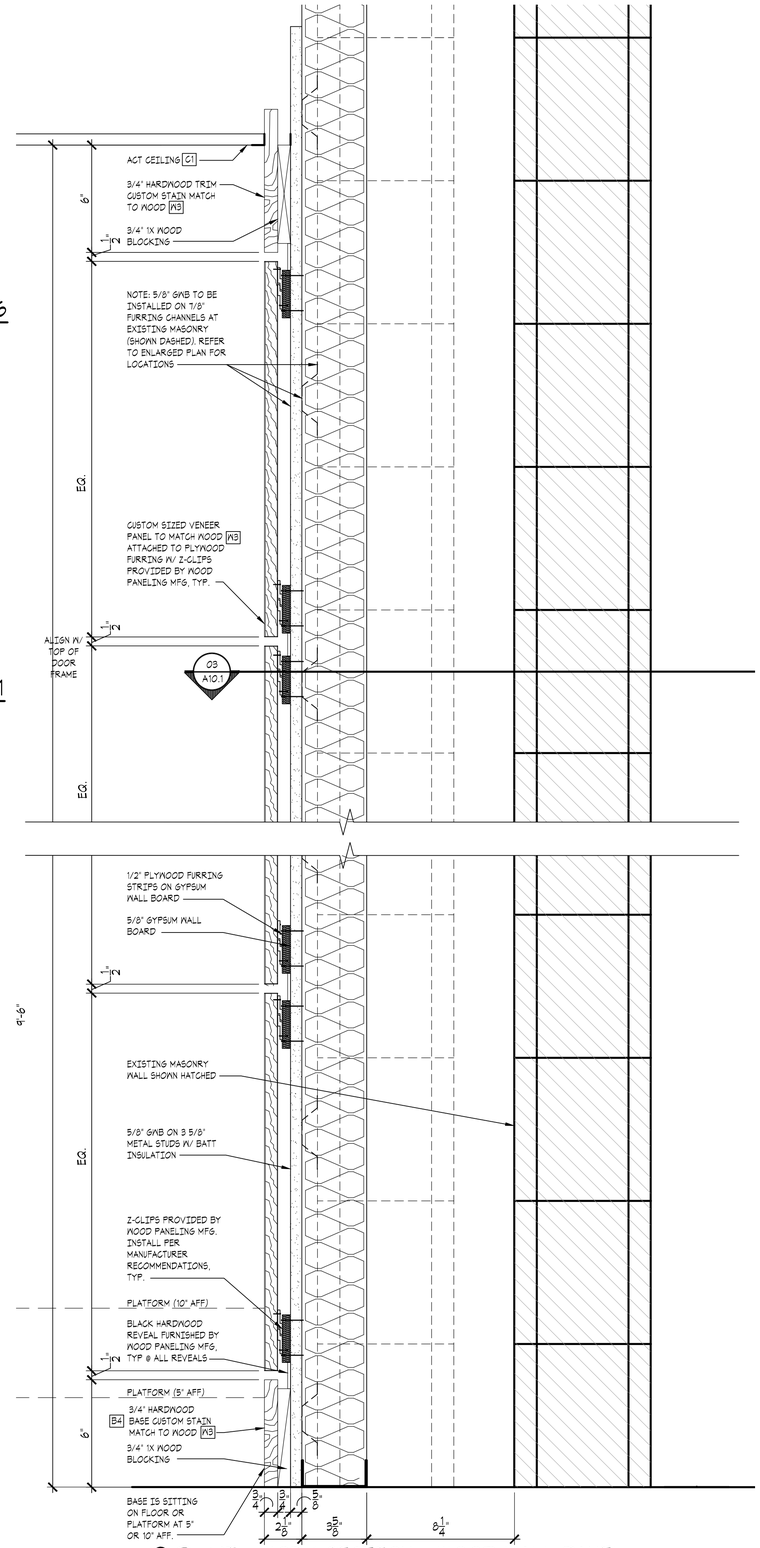

02 MILLWORK SECTION - WOOD WALL PANEL
SCALE: 3" = 1'-0"

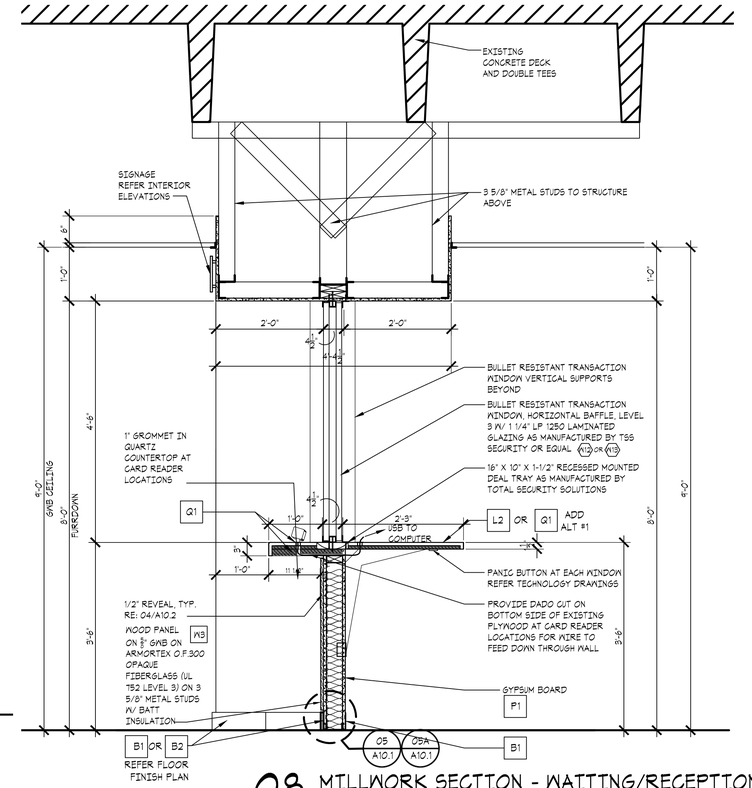

08 MILLWORK SECTION - WAITING/RECEPTIONIST
SCALE: 3/4" = 1'-0"

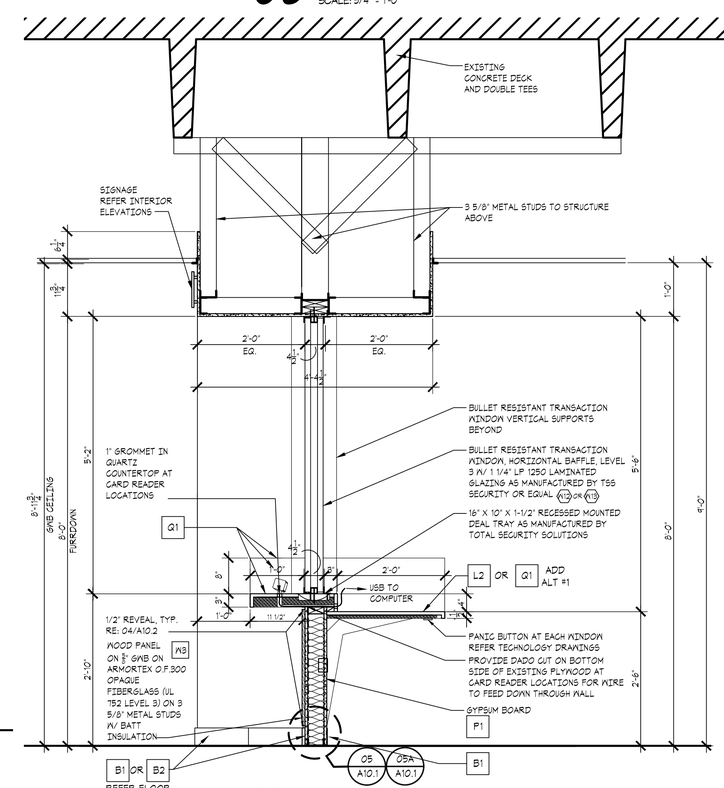

01 MILLWORK SECTION - WAITING/RECEPTIONIST
SCALE: 3/4" = 1'-0"

THE MCKINNEY PARTNERSHIP
architects

3600 West Main
Suite 200
Norman, Oklahoma
73072
405.360.1400 p
405.364.8287 f
tmparch.com

Seal:

Project:

City of Norman
Municipal Complex Renovation
Municipal Court
321 N. Webster Avenue
Norman, OK

Issue Date:
11/15/22 ISSUED FOR BIDDING

Revisions:

Project Number:
CM083319

Sheet Title:
MILLWORK SECTIONS

Sheet Number:
A10.1

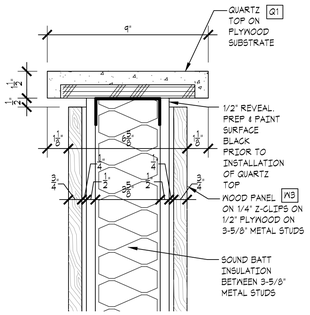

11 MILLWORK DETAIL - QUARTZ TOP
SCALE: 3" = 1'-0"

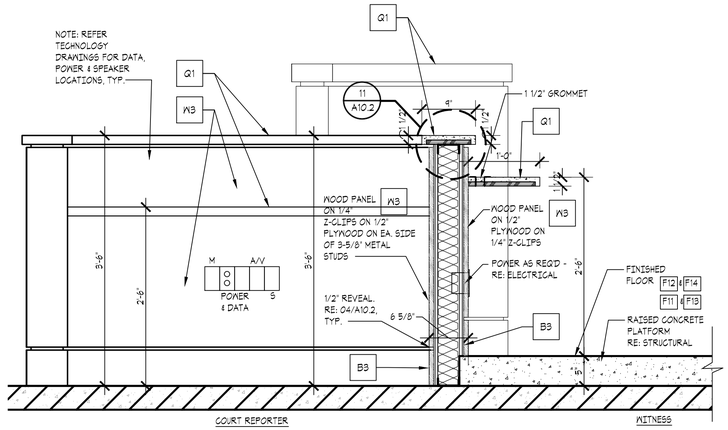

10 MILLWORK SECTION - WITNESS
SCALE: 1" = 1'-0"

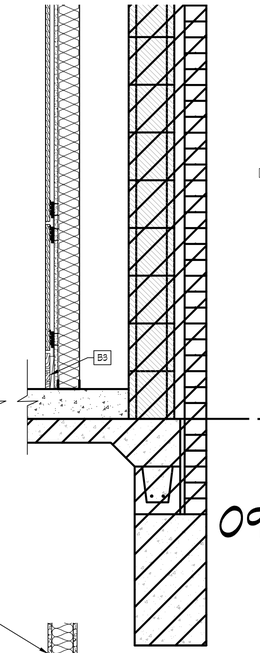

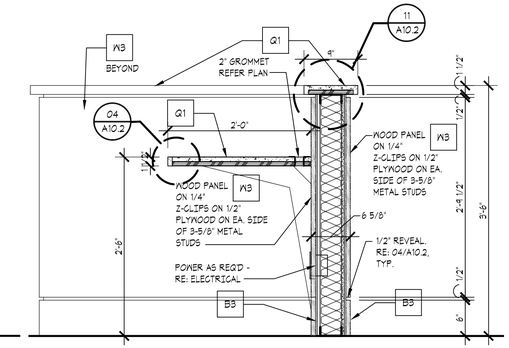

09 MILLWORK SECTION - COURT REPORTER
SCALE: 1" = 1'-0"

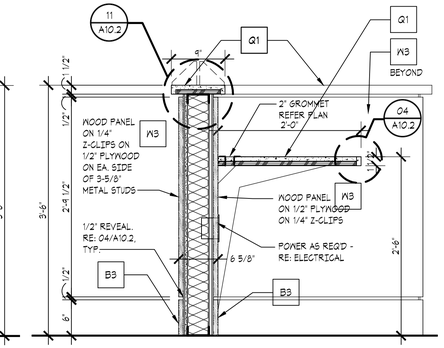

08 MILLWORK SECTION - CLERKS
SCALE: 1" = 1'-0"

NOTE:
FOR ALL INTERIOR HANDRAILS SHOWN ATTACHED DIRECTLY TO THE SLAB:

1. PROTECT EMBEDDED POST W/ 2 PART EPOXY DIP AS PER NAAM / NOMMA STANDARDS.
2. USE NON METALLIC EXPANDING GROUT FLUSH WITH TOP OF SLAB.
3. WHERE HANDRAILS ARE SHOWN ATTACHED TO EXISTING SLAB, CORE DRILL & REMOVE EXISTING SLAB AND REPOUR 3" W. X 8"D. CONCRETE PIER FOR HANDRAIL TO BE EMBEDDED.
4. REFER SIMILAR DETAIL 02/A5.1.
5. INTERIOR HANDRAILS WILL NOT HAVE ESCUTCHEON COVERS AT POST BASE. INSTALL FLOORING TIGHTLY AROUND POST SO THERE ARE NOT GAPS.

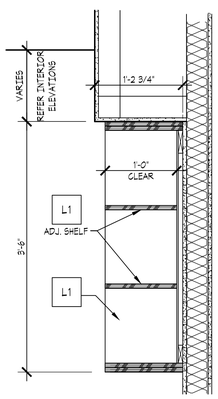

07 MILLWORK SECTION - OFFICE
SCALE: 1" = 1'-0"

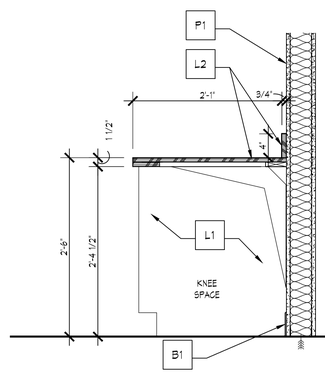

06 MILLWORK SECTION - OFFICE
SCALE: 1" = 1'-0"

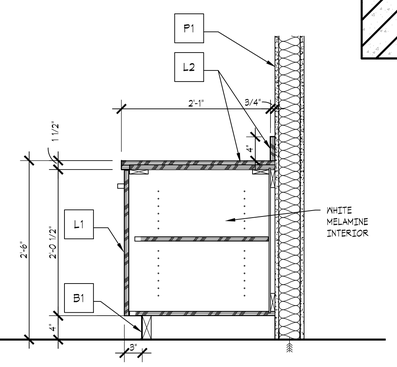

05 MILLWORK SECTION - OFFICE
SCALE: 1" = 1'-0"

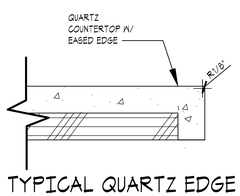

04A TYPICAL QUARTZ EDGE DETAIL
SCALE: 3" = 1'-0"

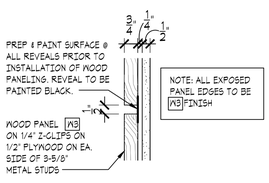

04 TYPICAL REVEAL DETAIL
SCALE: 3" = 1'-0"

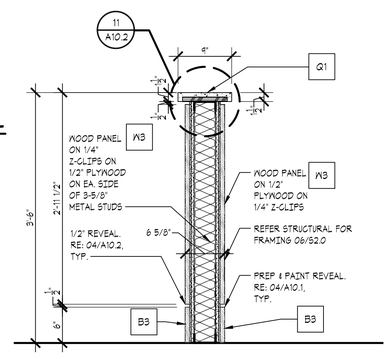

03 COURT SEPARATION WALL
SCALE: 1" = 1'-0"

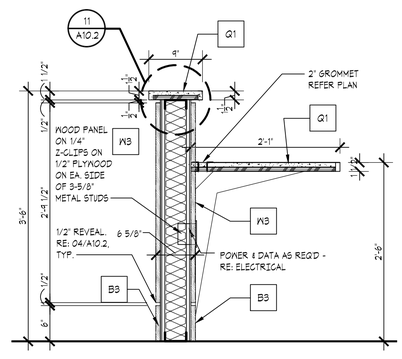

02 MILLWORK SECTION -BAILIFF
SCALE: 1" = 1'-0"

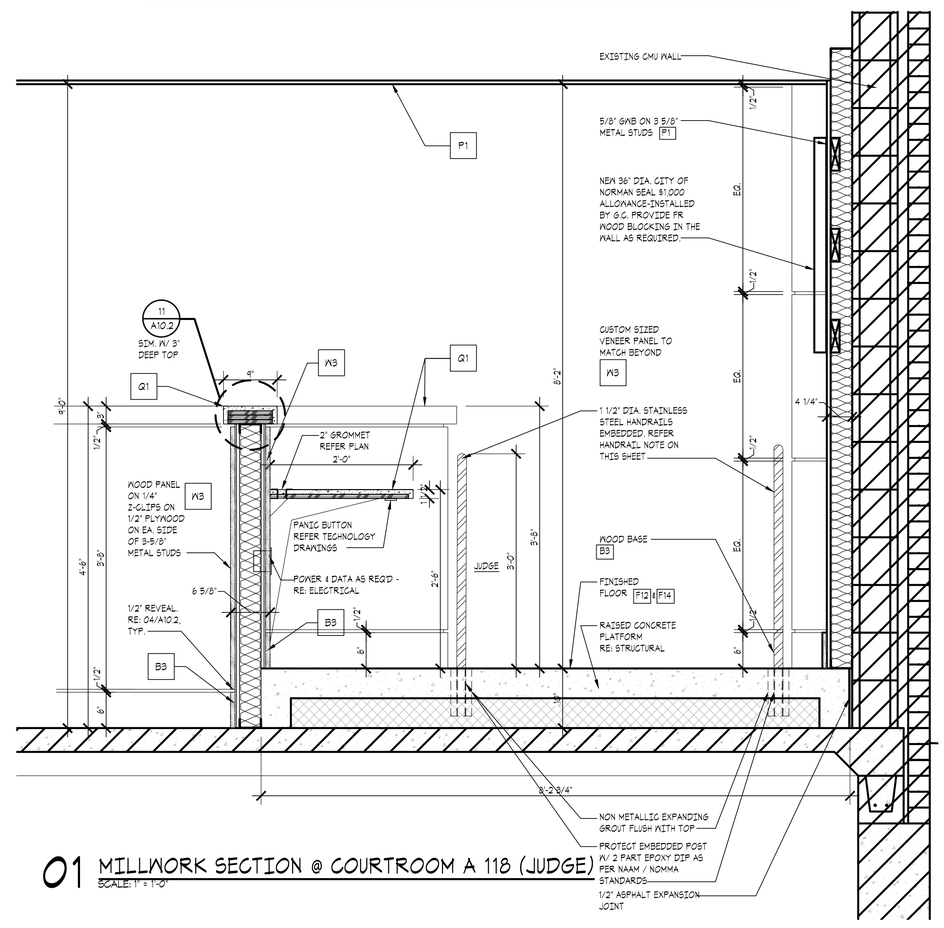

01 MILLWORK SECTION @ COURTROOM A 118 (JUDGE)
SCALE: 1" = 1'-0"

THE MCKINNEY PARTNERSHIP
architects

3600 West Main
Suite 200
Norman, Oklahoma
73072
405.360.1400 p
405.364.8287 f
tmparch.com

Seal:

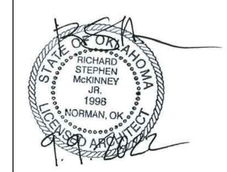

Project:

City of Norman
Municipal Complex Renovation
Municipal Court
321 N. Webster Avenue
Norman, OK

Issue Date:
11/15/22 ISSUED FOR BIDDING

Revisions:

Project Number:
CM083319

Sheet Title:
MILLWORK SECTIONS

Sheet Number:
A10.2

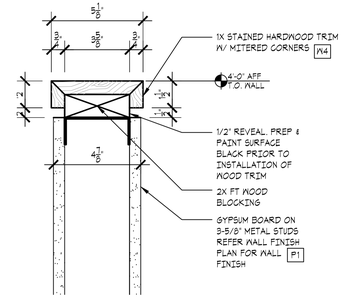

12 MILLWORK DETAIL - WOOD TOP
SCALE: 3" = 1'-0"

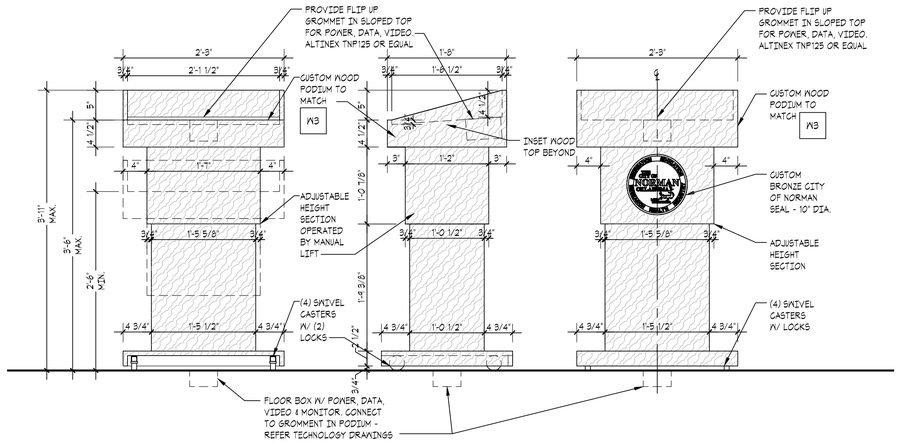

11 MILLWORK ELEVATIONS - ADJUSTABLE HEIGHT / SWIVEL LECTURN (QTY 2)
SCALE: 1" = 1'-0"

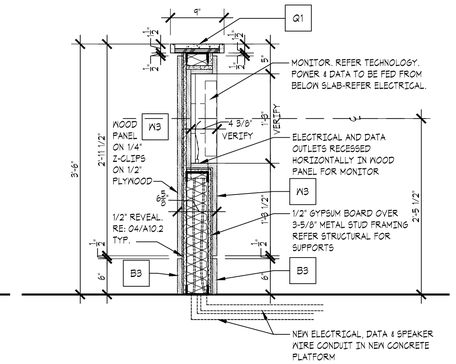

10 MILLWORK SECTION - JURY BOX
SCALE: 1" = 1'-0"

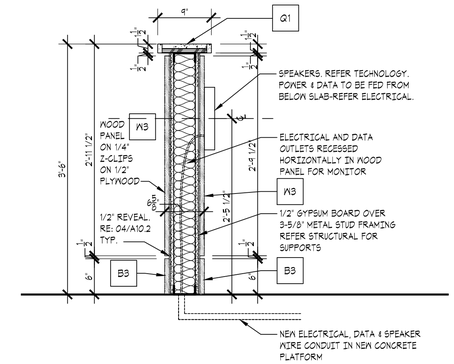

09 MILLWORK SECTION - JURY BOX
SCALE: 1" = 1'-0"

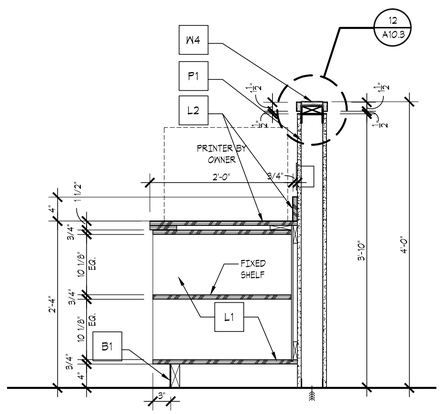

08 MILLWORK SECTION - RECEPTIONIST
SCALE: 1" = 1'-0"

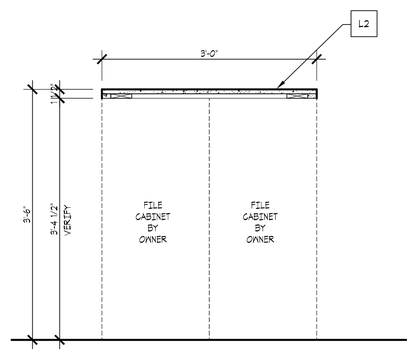

07 MILLWORK SECTION - RECEPTIONIST
SCALE: 1" = 1'-0"

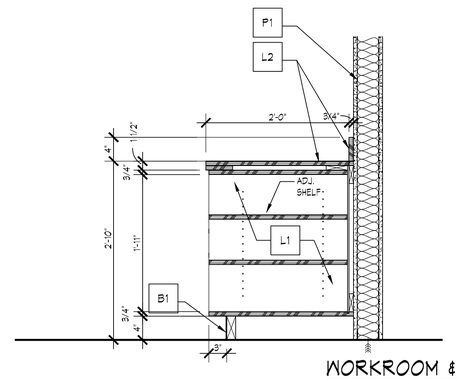

WORKROOM &

06 MILLWORK SECTION - RECEPTIONIST
SCALE: 1" = 1'-0"

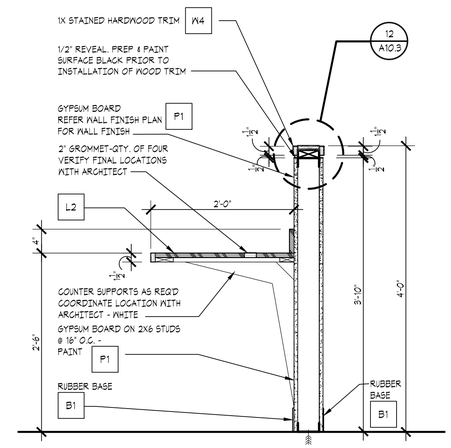

05 MILLWORK SECTION - RECEPTIONIST
SCALE: 1" = 1'-0"

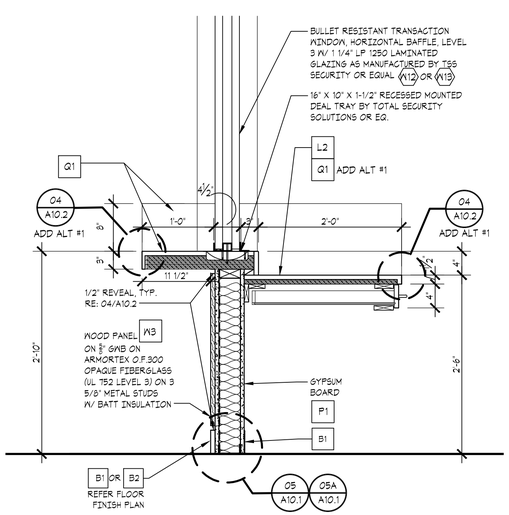

04 MILLWORK SECTION - RECEPTIONIST
SCALE: 1" = 1'-0"

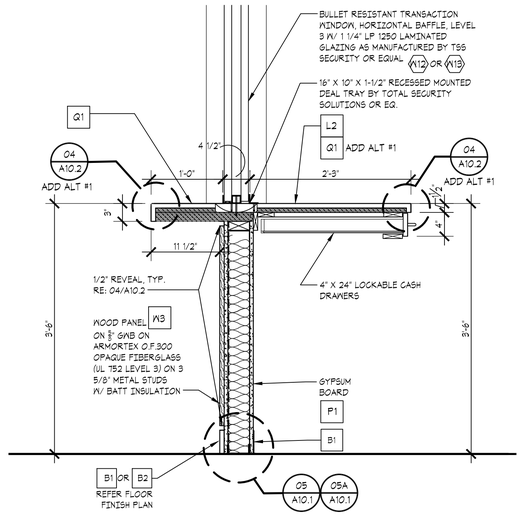

03 MILLWORK SECTION - RECEPTIONIST
SCALE: 1" = 1'-0"

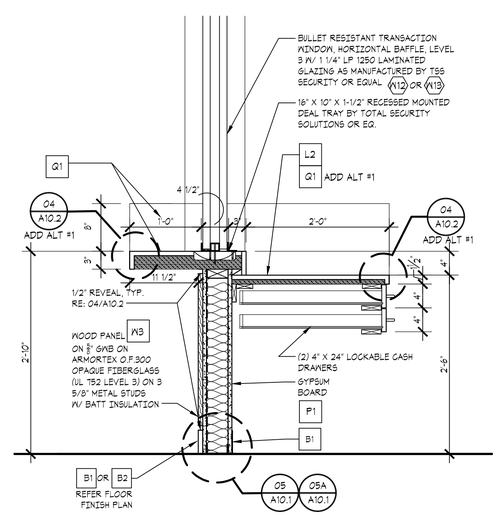

02 MILLWORK SECTION - RECEPTIONIST
SCALE: 1" = 1'-0"

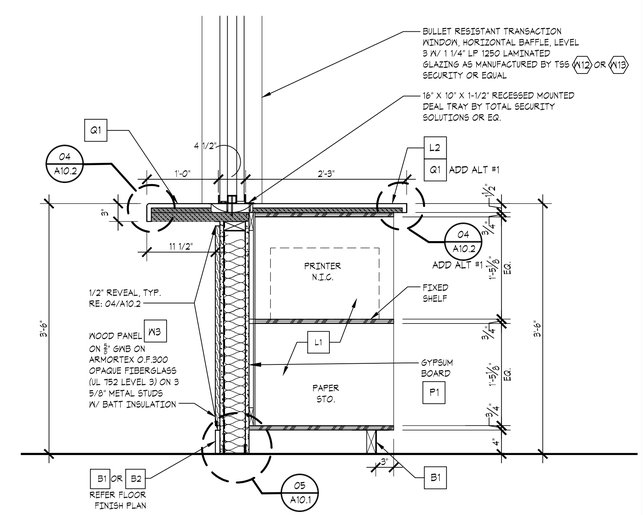

01 MILLWORK SECTION - RECEPTIONIST
SCALE: 1" = 1'-0"

THE MCKINNEY PARTNERSHIP
architects
3600 West Main
Suite 200
Norman, Oklahoma
73072
405.360.1400 p
405.364.8287 f
tmparch.com

Seal:

Project:

City of Norman
Municipal Complex Renovation
Municipal Court
321 N. Webster Avenue
Norman, OK

Issue Date:
11/15/22 ISSUED FOR BIDDING

Revisions:

Project Number:
CM083319

Sheet Title:
MILLWORK SECTIONS

Sheet Number:
A10.3

GENERAL MECHANICAL SYMBOLS

- REVISION NUMBER - SHOWN ON PLANS
- POINT WHERE NEW CONNECTS TO EXISTING
- NUMBER OF DETAIL ON SHEET
- NUMBER OF SHEET WHERE DETAIL APPEARS
- 1 — KEYNOTE
- CONTINUATION SYMBOL
- Room 5 — ROOM NAME AND NUMBER
- ITEM TO BE DEMOLISHED
- AREA NOT IN CONTRACT
- 2" — PIPE SIZE TAG (DIAMETER)
- ABOVE GROUND PIPING
- 1/8" / 12" SLOPE — PIPE SLOPE TAG
- BELOW GROUND PIPING
- INVERT: -105' - 1" — PIPE INVERT ELEVATION TAG
- (E) — EXISTING PIPE TAG
- PIPING BEING DEMOLISHED

ABBREVIATIONS

Ø	ROUND	LVR	LOUVER
ABV	ABOVE	LWT	LEAVING WATER TEMPERATURE
AC	AIR CONDITIONING	M/A	MIXED AIR
AD	AREA DRAIN	MAX	MAXIMUM
ADD	ADDENDUM	MBH	ONE THOUSAND BTU PER HOUR
AFF	ABOVE FINISHED FLOOR	MCF	ONE THOUSAND CUBIC FEET
AFUE	ANNUAL FUEL UTILIZATION EFFICIENCY	MD	MOTORIZED DAMPER
ALT	ALTERNATE	MECH	MECHANICAL
AP	ACCESS PANEL	MFR	MANUFACTURER
ARCH	ARCHITECT/ARCHITECTURAL	MIN	MINIMUM
BFF	BELOW FINISHED FLOOR	MISC	MISCELLANEOUS
BLW	BELOW	MTR	MOTOR
BTU	BRITISH THERMAL UNITS	MU/A	MAKE-UP/AIR
BTUH	BRITISH THERMAL UNITS PER HOUR	NC	NOISE CRITERIA
CAP	CAPACITY	NC	NORMALLY CLOSED
CB	CATCH BASIN	NIC	NOT IN CONTRACT
CFM	CUBIC FEET PER MINUTE	NO	NUMBER
CLG	CEILING	NO	NORMALLY OPEN
CO	CLEAN OUT	NTS	NOT TO SCALE
CW	COLD WATER	O	OXYGEN
D	DEGREE	O/A	OUTSIDE AIR
DB	DRY BULB	ORD	OVERFLOW ROOF DRAIN
DIA	DIAMETER	PD	PRESSURE DROP
DN	DOWN	PIV	POST INDICATOR VALVE
DW	DISTILLED WATER	PLBG	PLUMBING
EA	EACH	PRESS	PRESSURE
EAT	ENTERING AIR TEMPERATURE	PRV	PRESSURE REDUCING VALVE
ELEC	ELECTRICAL	PSI	POUNDS PER SQUARE INCH
EQUIP	EQUIPMENT	PSIG	POUNDS PER SQUARE INCH GAUGE
EWC	ELECTRIC WATER COOLER	PWR	POWER
EWT	ENTERING WATER TEMPERATURE	R	DUCT RISER
E/A	EXHAUST AIR	R/A	RETURN AIR
EXIST	EXISTING	RCP	RADIANT CEILING PANEL
F	DEGREES FAHRENHEIT	RD	ROOF DRAIN
FCO	FLOOR CLEAN OUT	REC	RECESSED
FD	FLOOR DRAIN	RED	REDUCER
FDC	FIRE DEPARTMENT CONNECTION	RH	RELATIVE HUMIDITY
FL	FLOOR	RL/A	RELIEF AIR
FO	FUEL OIL	RM	ROOM
FOV	FUEL OIL VENT	RPM	REVOLUTIONS PER MINUTE
FOR	FUEL OIL RETURN	RW	RAIN WATER
FOS	FUEL OIL SUPPLY	SF	SQUARE FOOT
FPM	FEET PER MINUTE	S/A	SUPPLY AIR
FS	FLOOR SINK	SAN	SANITARY
FT	FOOT/FEET	SF	SQUARE FOOT
FTR	FIN TUBE RADIATION	SD	SMOKE DAMPER
GAL	GALLON	SM	SURFACE MOUNT
GF	GAS-FIRED	SP	STANDPIPE
GC	GENERAL CONTRACTOR	SP	STATIC PRESSURE
GPM	GALLONS PER MINUTE	STM	STEAM
GW	GREASE WASTE	T	THERMOSTAT
HB	HOSE BIB	TD	TEMPERATURE DROP
HP	HORSE POWER	TDR	TRENCH DRAIN
HTG	HEATING	TEMP	TEMPERATURE
HTR	HEATER	TYP	TYPICAL
HW	HOT WATER	UG	UNDERGROUND
HYD	HYDRANT	VAC	VACUUM
ID	INDIRECT	V	VENT
IN	INCH	VAV	VARIABLE AIR VOLUME
INV	INVERT	VENT	VENTILATION
LB	POUND	VTR	VENT THROUGH ROOF
LB/HR	POUNDS PER HOUR	W	WASTE
LAT	LEAVING AIR TEMPERATURE	WB	WET BULB
LP	LOW PRESSURE	WCO	WALL CLEAN OUT
LPG	LIQUEFIED PETROLEUM GAS	WH	WALL HYDRANT

EQUIPMENT ABBREVIATIONS

AC	AIR CONDITIONING UNIT	ET	EXPANSION TANK
ACCU	AIR COOLING CONDENSING UNIT	EWH	ELECTRIC WATER HEATER
AHU	AIR HANDLING UNIT	FCU	FAN COIL UNIT
AS	AIR SEPARATOR	FP	FIRE PUMP
B	BOILER	GI	GREASE INTERCEPTOR
CH	CHILLER	GRV	GRAVITY ROOF VENTILATOR
CT	COOLING TOWER	HWP	HEATING WATER PUMP
CUH	CABINET UNIT HEATER	HRU	HEAT RECOVERY UNIT
CHWP	CHILLED WATER PUMP	PRV	POWER ROOF VENTILATOR
DBP	DOMESTIC WATER BOOSTER PUMP	RE	RETURN/EXHAUST FAN
DC	DUCT MOUNTED COIL	RTU	ROOFTOP UNIT
DCP	DOMESTIC WATER CIRCULATING PUMP	SP	SUMP PUMP
EF	EXHAUST FAN	UH	UNIT HEATER
EDC	ELECTRIC DUCT COIL	WH	WATER HEATER

HVAC SYMBOLS

- 18"x12" — SQUARE DUCT SIZE TAG (WIDTH x HEIGHT)
- 18"/12" — OVAL DUCT SIZE TAG (WIDTH / HEIGHT)
- 18"Ø — ROUND DUCT SIZE TAG (DIAMETER)
- 18"Ø — SPIRAL DUCT SIZE TAG (DIAMETER)
- (E) — EXISTING DUCT TAG
- DUCT BEING DEMOLISHED
- 18"x18" S/A — SUPPLY AIR
- 18"x18" S-O/A — CONDITIONED OUTSIDE AIR
- 18"x18" O/A — OUTSIDE AIR
- 18"x18" R/A — RETURN AIR
- 18"x18" T/A — TRANSFER AIR
- 18"x18" E/A — EXHAUST AIR
- 18"x18" L/A — RELIEF AIR
- 18"x18" GE/A — GREASE EXHAUST AIR
- 18"x18" CE/A — CONDENSATE EXHAUST AIR
- 18"x18" SE/A — SMOKE EXHAUST AIR
- 6"Ø FLUE — EXHAUST GAS FLUE
- 6"Ø C/A — COMBUSTION AIR
- DROP — RECTANGULAR SUPPLY/OUTSIDE AIR DUCT RISE
- DROP — ROUND SUPPLY/OUTSIDE AIR DUCT RISE
- DROP — RECTANGULAR RETURN/TRANSFER AIR DUCT RISE
- DROP — ROUND RETURN/TRANSFER AIR DUCT RISE
- DROP — RECTANGULAR EXHAUST/RELIEF AIR DUCT RISE
- DROP — ROUND EXHAUST/RELIEF AIR DUCT RISE

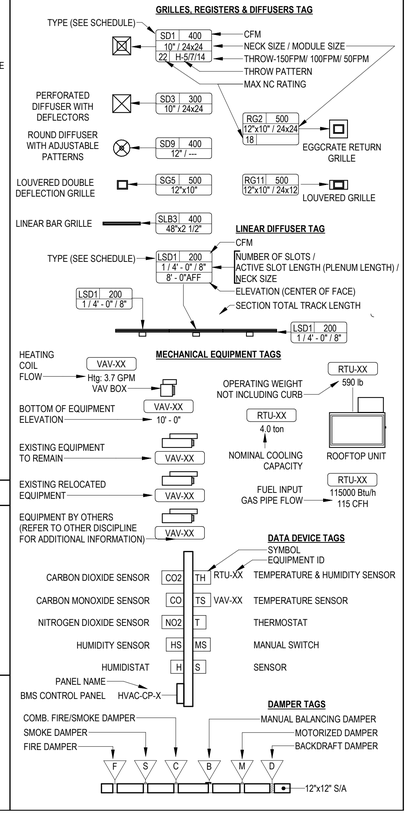

PIPING SYMBOLS

- CHWR — CHILLED WATER RETURN
- CHWS — CHILLED WATER SUPPLY
- CD — CONDENSATE DRAINAGE
- CWR — CONDENSER WATER RETURN
- CWS — CONDENSER WATER SUPPLY
- GWR — GEOTHERMAL WATER RETURN
- GWS — GEOTHERMAL WATER SUPPLY
- HWR — HEATING WATER RETURN
- HWS — HEATING WATER SUPPLY
- G — NATURAL GAS
- PG — PROPANE GAS
- REF-L — REFRIGERANT-LIQUID
- REF-S — REFRIGERANT-SUCTION
- REF-HG — REFRIGERANT-HOT GAS
- STM — STEAM
- CDR — CONDENSATE RETURN

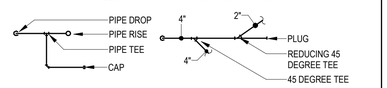

PIPE ACCESSORY TAGS

- WM — 2" DOM. WM DOMESTIC WATER METER
- 2" BALANCING BALANCING VALVE
- 1 — 2" SHUTOFF 1/4 TURN BALL VALVE
- 2" CHECK CHECK VALVE
- 4 — 2" TMV 3-WAY MIXING VALVE
- M — 2" M-CNTRL MOTORIZED CONTROL VALVE
- M — 2" 3-WAY CNTRL 3 WAY MOTORIZED CONTROL VALVE
- 2" PRV PRESSURE REDUCING VALVE
- S — 3/8" SOLENOID REFRIGERANT SOLENOID VALVE
- 2" BUTTERFLY BUTTERFLY VALVE

" NOTE "
ALL OF GENERAL NOTES ON THIS SHEET ARE TO BE APPLIED TO ALL OTHER DRAWINGS IN THIS SET.THE SYMBOLS AND ABBREVIATIONS SHOWN ON THIS SHEET MAY OR MAY NOT BE USED IN THIS SET OF DRAWINGS.

GENERAL MECHANICAL NOTES

1. SUBMISSION OF PROPOSAL IN CONNECTION WITH THIS WORK SHALL IMPLY THAT THE BIDDER HAS EXAMINED THE JOB SITE UNDER WHICH HE WILL BE OBLIGATED TO OPERATE SHOULD HE BE AWARDED THE WORK UNDER THIS CONTRACT. NO EXTRA CHARGE WILL BE ALLOWED FOR FAILURE OF ANY BIDDER TO EXAMINE THE SITE PRIOR TO BID.
2. DUCT DIMENSIONS LISTED ON DRAWINGS REPRESENT THE AIRFLOW FREE AREAS AND DO NOT HAVE ALLOWANCES FOR INSULATION LINER, WHERE APPLICABLE, INSIDE THE DUCTS, OR DUAL WALL DIMENSIONS. DUCTS SHALL BE CONSTRUCTED TO INCLUDE INSULATION REQUIREMENTS AND MAINTAIN AIRFLOW DIMENSIONS INDICATED ON PLANS. FOR CLASH COORDINATION INCLUDE INSULATION THICKNESS PER SCHEDULE.
3. ALL WORK SHALL CONFORM TO STATE AND LOCAL CODES, RULES, REGULATIONS, AND ORDINANCES WHICH SHALL TAKE PRECEDENCE OVER THE PLANS IF CONFLICTS EXIST BETWEEN THEM.
4. THE DRAWINGS INDICATE THE GENERAL LAYOUT REQUIREMENTS FOR EQUIPMENT, FIXTURES, PIPING, DUCTWORK, ETC. FINAL LAYOUT SHALL BE MODIFIED TO FIT ACTUAL SITE CONDITIONS. ALL REQUIRED REVISIONS SHALL BE RECORDED ON A DESIGNATED HARD COPY SET OF REDLINE PLANS TO BE KEPT CURRENT TO JOBSITE PROGRESS. AT MINIMUM, THIS DOCUMENT SHALL BE UPDATED WEEKLY AND REDILY AVAILABLE FOR REVIEW AND REFERENCE.
5. COORDINATE ALL WORK WITH THE OWNER AND ALL OTHER CONTRACTORS. CONTRACTOR SHALL BE RESPONSIBLE FOR ALL RIGGING, HANDLING, AND PROTECTION OF MATERIALS. PROVIDE LABOR TO RECEIVE UNLOAD, STORE, PROTECT, AND TRANSFER TO POINT OF INSTALLATION OF ANY OWNER-FURNISHED ITEMS.
6. IN CASES OF EQUIPMENT SUBSTITUTION, CONTRACTOR IS RESPONSIBLE FOR VERIFYING THAT ALL SYSTEMS AND COMPONENTS WILL FIT PROPERLY PRIOR TO FABRICATION OR ORDERING. INSTALLED DUCTS MAY BE RESIZED BY THE CONTRACTOR TO FIT FIELD CONDITIONS AS LONG AS THE INSTALLED DUCTS SHALL HAVE EQUAL FRICTION LOSS TO THOSE SHOWN. RECTANGULAR DUCTS SHALL NOT BE CHANGED TO ROUND DUCTS. PROVIDE COMPLETE SHEET METAL SHOP DRAWINGS TO ENGINEER SHOWING ACTUAL DUCT SIZES, ARRANGEMENTS, AND UNIT LOCATIONS TO BE INSTALLED. THIS SHALL BE DONE PRIOR TO FABRICATION OR INSTALLATION.
7. INSTALL ACOUSTIC TURNING VANES IN ELBOWS IN RECTANGULAR DUCTS 20" AND LARGER. INSTALL RADIUS TYPE ELBOWS IN RECTANGULAR DUCTS SMALLER THAN 20".
8. USE 45 DEGREE TAKE-OFF FITTINGS AT ALL ROUND SUPPLY BRANCH TAKEOFFS. PROVIDE BALANCE DAMPERS AT ALL SUPPLY DUCT RUNOUTS TO GRILLES. LOCATE AS FAR AS POSSIBLE FROM GRILLES IN AN ACCESSIBLE LOCATION. PROVIDE ACCESS PANELS IN SOLID WALLS AND CEILINGS FOR BALANCING DAMPERS.
9. USE FLEX DUCTS FOR FINAL CONNECTION TO ALL CEILING DIFFUSERS, AND WHERE NECESSARY, SIDEWALL DIFFUSERS, AND LIMIT TO 3'-0" MAX. LENGTHS.
10. PROVIDE A COMPLETE AND OPERATING MECHANICAL SYSTEM, INCLUDING ALL INCIDENTAL ITEMS AND CONNECTIONS NECESSARY FOR PROPER OPERATION OR CUSTOMARILY INCLUDED, EVEN THOUGH EACH AND EVERY ITEM MAY NOT BE INDICATED.
11. THE MECHANICAL INSTALLATION SHALL BE SAFE, RELIABLE, ENERGY EFFICIENT AND EASILY MAINTAINED WITH ADEQUATE PROVISIONS ALLOWED FOR ACCESS TO EQUIPMENT.
12. THE MECHANICAL SYSTEM SHALL OPERATE QUIETLY WITH NOISE LEVELS BELOW THE CRITERIA RECOMMENDED FOR THE APPLICATION BY ASHRAE APPLICATIONS HANDBOOK NOISE AND VIBRATION CONTROL. PROVIDE CORRECTIVE ACTION AS REQUIRED TO REDUCE OBJECTIONABLE NOISE OR VIBRATION.
13. UNDERCUT DOORS 3/4 INCH WHERE NO RETURN NOR EXHAUST GRILLE IS SHOWN TO ALLOW FOR AIR TRANSFER (DO NOT UNDERCUT FIREDOORS.)
14. REFER TO ARCH. PLANS AND DETAILS FOR EXACT LOCATION OF ALL WALL AND CEILING MOUNTED DEVICES. ADJUST LOCATION OF SIDEWALL DEVICES AS NECESSARY TO AVOID INTERFERENCE WITH MOLDING OR OTHER ELECTRICAL DEVICES.
15. WHERE CONDUIT, CABLES, DUCTWORK OR PIPING PASSES THROUGH FIRE-RATED FLOORS OR WALLS, THE SLEEVES SHALL BE COMPLETELY SEALED WITH A FIRE STOP MATERIAL THAT IS UL LISTED AND ACCEPTED BY LOCAL AUTHORITIES HAVING JURISDICTION (AHJ) AS BEING SUITABLE FOR THIS SERVICE SUCH AS DOWN CORNING CORP "SILICONE ELASTOMER, RTV FOAM, OR SIMILAR MATERIAL TO MAINTAIN FIRE RATING OF THE WALL OR FLOOR.
16. CONTRACTOR SHALL BE RESPONSIBLE FOR ALL CORING AND BEAM PENETRATIONS AS IT RELATES TO HIS WORK.
17. CONTRACTOR SHALL NOT INSTALL ANY MAINTENANCE ITEMS ABOVE HARD CEILINGS. THIS SHALL INCLUDE VALVES, DAMPERS, OR ANY OTHER ITEMS THAT REQUIRE ACCESS AFTER CONSTRUCTION IS COMPLETED. IF INSTALLATION ABOVE A HARD CEILING OF THESE ITEMS CANNOT BE AVOIDED, THEN PROVIDE CEILING ACCESS DOORS EQUAL TO ACUDOR MODEL FW-505 WHERE REQUIRED. AT FIRE-RATED WALLS, USE EQUIVALENT OF ACUDOR MODEL FB-5060. MINIMUM SIZE SHALL BE 12"x12". USE 18"x18" WHEN PERSONNEL ACCESS IS REQUIRED.
18. PROVIDE AN INSULATED BACK ON ALL THERMOSTATS AND TEMPERATURE SENSORS THAT ARE MOUNTED ON CMU OR HOLLOW WALLS. PROVIDE SHALLOW DEVICE EXTENSION BOX BEHIND T-STATS AND SENSORS ON MASONRY WALLS IN COMMERCIAL / RETAIL SPACES.
19. PROVIDE FIRE DAMPERS AT ALL FIRE-RATED WALLS AND FLOOR PENETRATIONS. REFER TO ARCHITECTURAL DRAWINGS FOR FIRE BARRIER WALLS AND CEILINGS.
20. IF A CENTRAL FIRE ALARM SYSTEM IS REQUIRED FOR THIS PROJECT, MECHANICAL CONTRACTOR SHALL INSTALL DUCT MOUNTED SMOKE DETECTORS PROVIDED BY FIRE ALARM CONTRACTOR. REFER TO ELECTRICAL NOTES FOR EXACT REQUIREMENTS. MECHANICAL CONTRACTOR SHALL IDENTIFY A SET OF TERMINALS FOR EQUIPMENT SHUTDOWN ON ALL FAN POWERED EQUIPMENT REQUIRING SHUTDOWN CONTROLS. FIRE ALARM CONTRACTOR SHALL WIRE FROM DUCT MOUNTED SMOKE DETECTOR TO SHUTDOWN TERMINALS TO SHUT DOWN FAN OPERATION WHEN SMOKE IS DETECTED.
21. AT PENETRATIONS THROUGH FIRE WALLS: ANY NON-METALLIC PIPE OR DUCT SHOULD BE EXTERNALLY SLEEVED WITH STEEL, FERROUS, OR COPPER MATERIALS, SECURELY FASTENED TO THE FIRE RATED ASSEMBLY, AND ANY SPACE BETWEEN THE SLEEVE AND THE ASSEMBLY PENETRATED SHALL BE PROTECTED USING MATERIAL THAT CONFORMS TO ASTM E 814 OR UL 1479, SUCH AS FIRE STOP FS-1900, OR FLAME STOPPER 5000.
22. REFER TO ELECTRICAL DRAWINGS FOR SMOKE DAMPER AND FIRE/SMOKE DAMPER DETAIL. MECHANICAL CONTRACTOR SHALL PROVIDE AND INSTALL ALL DAMPERS WITH MOTORIZED ACTUATORS AND INSTALL SMOKE DETECTORS AND PROVIDE WIRING FOR FAN SHUTDOWN CONTROLS. COORDINATE WITH ELECTRICAL CONTRACTOR AND PROVIDE DAMPER ACTUATOR COMPATIBLE WITH ELECTRICAL WIRING PROVIDED. PROVIDE ANY WIRING OR COMPONENTS NOT PROVIDED BY THE ELECTRICAL CONTRACTOR THAT ARE REQUIRED TO PROVIDE A COMPLETE AND OPERATIONAL SYSTEM.
23. AHEAD OF ALL VAV BOX INLETS, INSTALL STRAIGHT DUCT EQUIVALENT TO AT LEAST 2 DIAMETERS IN LENGTH WHETHER SHOWN ON PLANS OR NOT.
24. SEISMIC PROTECTION FOR CONCERNS OF ALL BUILDING SYSTEMS INCLUDING BUT NOT LIMITED TO MECHANICAL, PLUMBING, AND ELECTRICAL MUST MEET MINIMUM REQUIREMENTS OF ALL APPLICABLE CODES FOR BUILDINGS' CLASSIFIED SEISMIC PROTECTION MEASURES TO BE APPLIED SHALL BE INSTALLED IN STRICT ACCORDANCE WITH ALL APPLICABLE LOCAL, STATE, AND/OR FEDERAL CODES AND WITH MANUFACTURER'S REQUIREMENTS, THE MOST STRINGENT SHALL APPLY
26. NO RECTANGULAR DUCT SMALLER THAN 10"X10"
27. ANY LINE VOLTAGE WIRING THAT IS RUN BY THE MECHANICAL CONTRACTOR SHALL BE INSTALLED IN ACCORDANCE WITH THE ELECTRICAL PLANS, NOTES, AND SPECIFICATIONS.
28. WHERE DUCTS PASS THROUGH FIRE RATED WALLS AND NO FIRE DAMPER IS REQUIRED, PROVIDE A STEEL SLEEVE (MIN. 12" LONG BY 0.60" THICK) IN EACH DUCT OPENING PER IBC 714.

PROJECT GENERAL NOTES

- A COORDINATE INSTALLATION OF PIPING, DUCTWORK, CONDUIT, LIGHTS, CABLE TRAY, STRUCTURE, AND EQUIPMENT TO PREVENT CONFLICTS.
- B FINAL PRODUCT SHALL BE A COMPLETE AND FUNCTIONING SYSTEM, AND SHALL CONFORM TO ALL REQUIREMENTS OF APPLICABLE FEDERAL, STATE, AND LOCAL CODES, INCLUDING BUT NOT LIMITED TO THE INTERNATIONAL BUILDING CODE AND INTERNATIONAL MECHANICAL CODE.
- C ALL ROOF MOUNTED EQUIPMENT SHALL BE A MINIMUM 10'-0" FROM EDGE OF ROOF.
- D LOCATE DUCTWORK, PIPING AND MECHANICAL EQUIPMENT AWAY FROM THE SPACE ABOVE ELECTRICAL PANELS. TRANSFORMERS AND OTHER ELECTRICAL EQUIPMENT.
- E PENETRATIONS OF RATED ASSEMBLIES SHALL BE FIRE STOPPED. FIRE STOPPING SHALL BE AN APPROVED MATERIAL AS PRESCRIBED IN CSFM STANDARD 43-1 AND SHALL BE U.L. LISTED.
- F PROVIDE SLEEVES AND/OR OPENINGS TO RUN PIPES AND DUCTS THROUGH FOUNDATIONS, FLOORS, WALLS, AND ROOF.
- G MAINTAIN CLEAR ACCESS TO SERVICE EQUIPMENT AND OTHER ACCESSORIES REQUIRING SERVICE, VISUAL INSPECTION OR HAND OPERATION. WHERE INDICATED OR REQUIRED, PROVIDE ACCESS PANELS OF THE TYPE SELECTED TO SUIT MATERIALS IN WHICH INSTALLED.
- H ADJUST PIPING AND DUCTWORK SIZES TO PROPERLY CONNECT TO MECHANICAL EQUIPMENT.
- I REFER TO PLUMBING DRAWINGS FOR GAS AND A.C. CONDENSATE DRAIN PIPING.
- J PIPE SIZES SHOWN SHALL BE CONTINUED IN THE DIRECTION OF FLOW UNTIL ANOTHER SIZE IS SHOWN.
- K FOR DETAILS, EQUIPMENT CONNECTIONS, AND PIPE SIZES NOT SHOWN ON THE SEGMENTS, REFER TO DETAILS, SCHEDULES, AND SPECIFICATIONS.
- L INSTALL ALL EQUIPMENT IN ACCORDANCE WITH THE RESPECTIVE MANUFACTURER'S WRITTEN INSTALLATION INSTRUCTIONS, AT A LEVEL OF QUALITY AND WORKMANSHIP CONSISTENT WITH THE SPECIFICATIONS.
- M LOCATIONS OF PIPING, DUCTWORK AND EQUIPMENT AS INDICATED ON THE DRAWING, ARE APPROXIMATE AND SUBJECT TO MINOR ADJUSTMENTS IN THE FIELD. WORK SHALL BE COORDINATED WITH ALL OTHER TRADES TO AVOID INTERFERENCE IN THE FIELD.
- N INSTALL EXPOSED PIPING AND DUCTWORK AS HIGH AS PRACTICAL IN ROOMS WITHOUT CEILINGS.
- O THE CONTRACTOR'S WORK SCHEDULE SHALL BE SUBMITTED TO AND APPROVED BY THE OWNER.
- P PRIOR TO STARTING WORK, SUBMIT SHOP DRAWINGS FOR ALL MECHANICAL EQUIPMENT, PLUMBING FIXTURES, AND DIFFUSERS.
- Q CONTRACTOR SHALL OBTAIN AND PAY FOR ALL NECESSARY PERMITS AND SHALL ARRANGE FOR ALL INSPECTIONS AS REQUIRED.
- R PROVIDE ONE YEAR WARRANTY FOR ALL WORKMANSHIP AND MATERIALS AFTER THE DATE OF FINAL ACCEPTANCE.
- S ALL ROOFING WORK SHALL BE PERFORMED BY OWNER'S ROOFING CONTRACTOR TO MAINTAIN MANUFACTURER'S WARRANTY.

HVAC SHEET INDEX

MD1.1	MECHANICAL DEMOLITION PLAN
MD1.2	MECHANICAL PIPING DEMOLITION PLAN
M0.1	MECHANICAL LEGENDS AND ABBREVIATIONS
M1.1	HVAC PLAN
M1.2	MECHANICAL PIPING PLAN
M5.1	MECHANICAL DETAILS
M5.2	MECHANICAL DETAILS
M5.3	MECHANICAL DETAILS
M6.1	MECHANICAL SCHEDULES

THE MCKINNEY PARTNERSHIP
architects
3600 West Main
Suite 200
Norman, Oklahoma
73072
405.360.1400 p
405.364.8287 f
tmparch.com

Copyright © 2022 The McKinney Partnership Architects, P.C., All Rights Reserved

Seal:

PROFESSIONAL ENGINEER — Nic Millard — 23394 — OKLAHOMA — 11/18/22

Project:

City of Norman
Municipal Complex Renovation
Municipal Court
321 N. Webster Avenue
Norman, OK

Issue Date:
11/18/22 ISSUED FOR BIDDING

Revisions:

Project Number:
CM083319 (201253R)

Sheet Title:
MECHANICAL LEGENDS AND ABBREVIATIONS

Sheet Number:
M0.1

COA#: 5338 Expires 06/30/2023
520 West Broadway Avenue Suite 101
Broken Arrow, Oklahoma 74012

918.895.6510 p
hpengineeringinc.com/

HP ENGINEERING

Autodesk Docs://201188K Norman Courthouse/201188K CoN County Courthouse.rvt
11/18/2022 5:34:48 PM

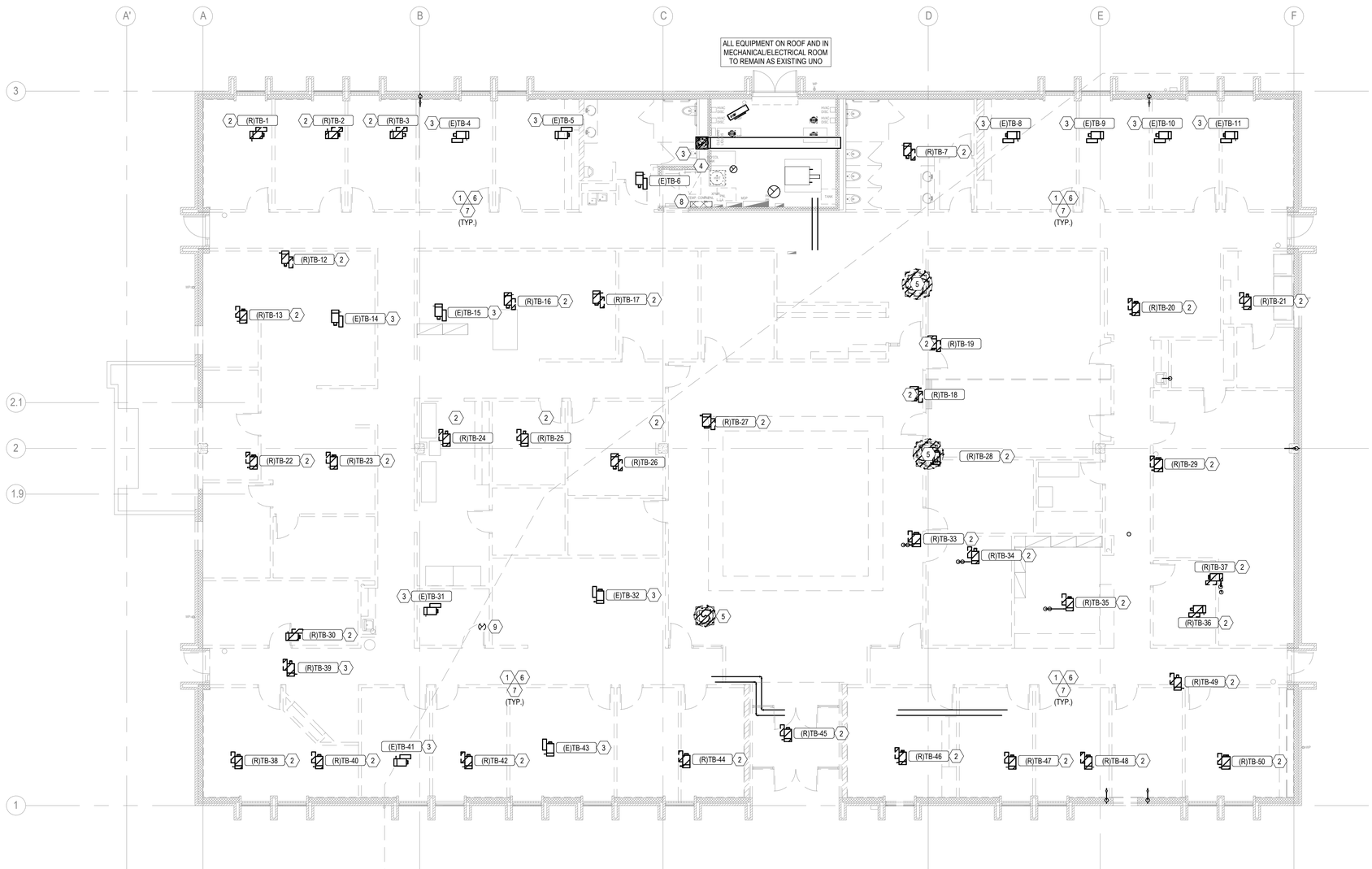

1 MD1.1 MECHANICAL DEMOLITION PLAN
1/8" = 1'-0"

HVAC SHEET NOTES

A CONTRACTOR SHALL BE RESPONSIBLE TO PROVIDE A COMPLETE AND WORKING SYSTEM.

B INSTALL, SUPPORT, & BRACE NEW DUCTWORK AND ACCESSORIES PER SMACNA GUIDELINES.

C DUCT SIZES SHOWN ARE CLEAR INSIDE DIMENSIONS. CONTRACTOR SHALL MAKE ALLOWANCE FOR ANY INTERIOR LINING, INSULATION, ETC.

D ALL NEW DUCT ELBOWS SHALL BE RADIUS TYPE. WHERE NECESSARY, CONTRACTOR MAY SUBSTITUTE MITERED ELBOWS WITH TURNING VANES.

E PROVIDE FLAT BLADE MANUAL VOLUME DAMPERS AT ALL TERMINAL DUCT BRANCHES AND AS INDICATED.

F INSTALL EQUIPMENT PER MANUFACTURER'S RECOMMENDATIONS. ROOFTOP EQUIPMENT SHALL BE LOCATED NO CLOSER THAN 10'-0" FROM THE ROOF EDGE.

G ALL PRIMARY CONDENSATE DRAIN PIPING SHALL BE INSULATED TO A MINIMUM THICKNESS OF 1/2" AND SHALL INCLUDE A VAPOR RETARDANT OUTSIDE THE INSULATION. SEAL ALL JOINTS AND PENETRATIONS.

H COORDINATE ALL EXTERIOR PENETRATIONS INCLUDING ROOF PENETRATIONS WITH OTHER TRADES TO PROVIDE A COMPLETE AND FULLY WEATHER-PROOF INSTALLATION.

I ALL TRANSFER DUCTWORK SHALL BE INTERNALLY LINED WITH MINIMUM 1/2" ACOUSTIC LINING.

J CONTRACTOR SHALL ENGAGE A TESTING AND BALANCE FIRM CERTIFIED BY AABC TO PERFORM TESTING AND BALANCING PROCEDURES ON EACH SYSTEM ACCORDING TO THE PROCEDURES CONTAINED IN AABC'S "NATIONAL STANDARDS.

K FOR TESTING AND BALANCING HEATING, VENTILATING, AND AIR CONDITIONING SYSTEMS" AND PROVIDE TWO COPIES OF THE CERTIFIED TAB REPORTS.

L THIS DRAWING IS DIAGRAMMATIC IN NATURE AND SHALL NOT BE SCALED TO DETERMINE THE EXACT LOCATION OR EXTENT OF THE WORK. CONTRACTOR SHALL VERIFY ALL EXISTING CONDITIONS PRIOR TO THE START OF THE WORK. CONTRACTOR SHALL BE RESPONSIBLE TO PROVIDE A COMPLETE AND WORKING SYSTEM.

M THIS DRAWING IS BASED ON VISUALLY OBSERVABLE EXISTING CONDITIONS AS OF THE TIME OF DESIGN. CONTRACTOR SHALL BE RESPONSIBLE TO FULLY VERIFY ALL EXISTING CONDITIONS, COMPONENTS, ETC. PRIOR TO THE START OF THE WORK. ANY DEVIATION FROM THIS DRAWING IN KIND, OR IN LOCATION EXCEEDING 1'-0", SHALL BE BROUGHT TO THE ATTENTION OF THE ENGINEER.

N PROVIDE DUCT INSULATION FOR ALL NEW DUCTWORK AS NOTED.

O ALL REFRIGERANT PIPING SHALL BE INSULATED PER MANUFACTURER'S REQUIREMENTS.

KEYNOTES

1 DEMOLISH ALL EXISTING SUPPLY AND RETURN DUCTWORK THROUGHOUT BUILDING BACK TO MAIN DUCT DROPS. PRESERVE EXISTING VERTICAL MAIN DUCTS FOR RE-USE.

2 DISCONNECT, UNMOUNT, AND PRESERVE EXISTING VAV TERMINAL BOX UNIT FOR RE-USE. PRESERVE W VALVE, ACTUATOR, CONTROLS AND ALL OTHER APPURTENANCES FOR RE-USE.

3 EXISTING VAV TERMINAL BOX UNIT TO REMAIN. DEMOLISH ASSOCIATED DUCTS CONNECTED TO TERMINAL BOX AND REPLACE PER HVAC PLAN. TERMINAL BOX MAY REQUIRE SLIGHT ADJUSTMENT IN ORIENTATION TO ACHIEVE DESIRED AIRFLOW DIRECTION. REFER HVAC PLAN FOR DESIRED ORIENTATION.

4 REPLACE EXISTING EXHAUST FAN AS NOTED ON HVAC PLAN. REMOVE EXISTING EXHAUST FAN, ASSOCIATED EXHAUST GRILLES, AND ASSOCIATED DUCTWORK.

5 DEMOLISH EXISTING EXHAUST FAN, ASSOCIATED EXHAUST GRILLES, AND ASSOCIATED DUCTWORK. IF EXISTING EXHAUST FAN IS ROOF-MOUNTED, REFER TO ARCH TO PATCH AND REFINISH ROOF.

6 DEMOLISH ALL EXISTING THERMOSTATS AND ASSOCIATED CONDUT AND WIRING THROUGHOUT BUILDING.

7 DEMOLISH ALL EXISTING SUPPLY AND RETURN AIR DEVICES THROUGHOUT BUILDING UNO

8 COORDINATE WITH CONTROLS CONTRACTOR TO PREPARE EXISTING HVAC CONTROL PANEL TO BE RELOCATED APPROXIMATELY 6" ON WALL.

9 REMOVE ABANDONED 8" EXHAUST DUCT AND PATCH ROOF PENETRATION.

THE MCKINNEY PARTNERSHIP
architects

3600 West Main
Suite 200
Norman, Oklahoma
73072
405.360.1400 p
405.364.8287 f
tmparch.com

Copyright © 2022 The McKinney Partnership Architects, P.C., All Rights Reserved

Seal:

PROFESSIONAL ENGINEER
Nic Millard
23394
OKLAHOMA
LICENSED
11/18/22

Project:

City of Norman
Municipal Complex Renovation
Municipal Court

321 N. Webster Avenue
Norman, OK

Issue Date:
11/18/22 ISSUED FOR BIDDING

Revisions:

Project Number:
CM083319 (201253R)

Sheet Title:
MECHANICAL DEMOLITION PLAN

Sheet Number:
MD1.1

COA#: 5338 Expires 06/30/2023
520 West Broadway Avenue Suite 101
Broken Arrow, Oklahoma 74012

918.895.6510 p
hpengineeringinc.com/

HP ENGINEERING

Autodesk Docs://201188K Norman Courthouse/221188K CoN County Courthouse.rvt
11/18/2022 5:35:23 PM

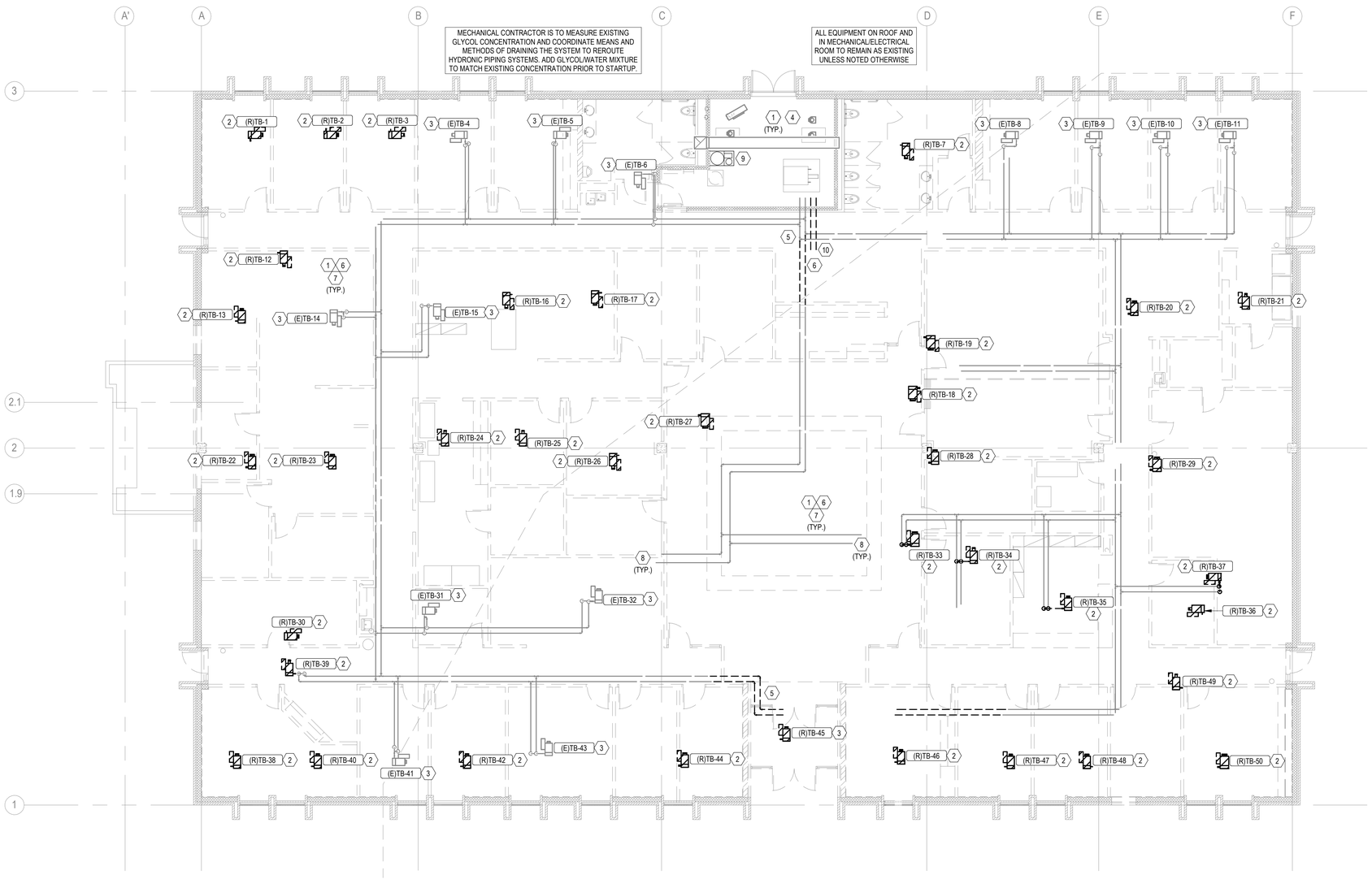

1 MD1.2 MECHANICAL PIPING DEMOLITION PLAN
1/8" = 1'-0"

HVAC SHEET NOTES

A CONTRACTOR SHALL BE RESPONSIBLE TO PROVIDE A COMPLETE AND WORKING SYSTEM.

B INSTALL, SUPPORT, & BRACE NEW DUCTWORK AND ACCESSORIES PER SMACNA GUIDELINES.

C DUCT SIZES SHOWN ARE CLEAR INSIDE DIMENSIONS. CONTRACTOR SHALL MAKE ALLOWANCE FOR ANY INTERIOR LINING, INSULATION, ETC.

D ALL NEW DUCT ELBOWS SHALL BE RADIUS TYPE. WHERE NECESSARY, CONTRACTOR MAY SUBSTITUTE MITERED ELBOWS WITH TURNING VANES.

E PROVIDE FLAT BLADE MANUAL VOLUME DAMPERS AT ALL TERMINAL DUCT BRANCHES AND AS INDICATED.

F INSTALL EQUIPMENT PER MANUFACTURER'S RECOMMENDATIONS. ROOFTOP EQUIPMENT SHALL BE LOCATED NO CLOSER THAN 10'-0" FROM THE ROOF EDGE.

G ALL PRIMARY CONDENSATE DRAIN PIPING SHALL BE INSULATED TO A MINIMUM THICKNESS OF 1/2" AND SHALL INCLUDE A VAPOR RETARDANT OUTSIDE THE INSULATION. SEAL ALL JOINTS AND PENETRATIONS.

H COORDINATE ALL EXTERIOR PENETRATIONS INCLUDING ROOF PENETRATIONS WITH OTHER TRADES TO PROVIDE A COMPLETE AND FULLY WEATHER-PROOF INSTALLATION.

I ALL TRANSFER DUCTWORK SHALL BE INTERNALLY LINED WITH MINIMUM 1/2" ACOUSTIC LINING.

J CONTRACTOR SHALL ENGAGE A TESTING AND BALANCE FIRM CERTIFIED BY AABC TO PERFORM TESTING AND BALANCING PROCEDURES ON EACH SYSTEM ACCORDING TO THE PROCEDURES CONTAINED IN AABC'S "NATIONAL STANDARDS.

K FOR TESTING AND BALANCING HEATING, VENTILATING, AND AIR CONDITIONING SYSTEMS" AND PROVIDE TWO COPIES OF THE CERTIFIED TAB REPORTS.

L THIS DRAWING IS DIAGRAMMATIC IN NATURE AND SHALL NOT BE SCALED TO DETERMINE THE EXACT LOCATION OR EXTENT OF THE WORK. CONTRACTOR SHALL VERIFY ALL EXISTING CONDITIONS PRIOR TO THE START OF THE WORK. CONTRACTOR SHALL BE RESPONSIBLE TO PROVIDE A COMPLETE AND WORKING SYSTEM.

M THIS DRAWING IS BASED ON VISUALLY OBSERVABLE EXISTING CONDITIONS AS OF THE TIME OF DESIGN. CONTRACTOR SHALL BE RESPONSIBLE TO FULLY VERIFY ALL EXISTING CONDITIONS, COMPONENTS, ETC. PRIOR TO THE START OF THE WORK. ANY DEVIATION FROM THIS DRAWING IN KIND, OR IN LOCATION EXCEEDING 1'-0", SHALL BE BROUGHT TO THE ATTENTION OF THE ENGINEER.

N PROVIDE DUCT INSULATION FOR ALL NEW DUCTWORK AS NOTED.

O ALL REFRIGERANT PIPING SHALL BE INSULATED PER MANUFACTURER'S REQUIREMENTS.

KEYNOTES

1 ALL EXISTING CHILLED WATER SUPPLY AND RETURN PIPING TO REMAIN. ROOF MOUNTED CHILLER AND ALL ASSOCIATED APPURTENANCES TO REMAIN.

2 TERMINAL BOX TO BE RELOCATED. DEMOLISH EXISTING HOT WATER SUPPLY AND RETURN PIPING FROM TERMINAL BOX BACK TO SUPPLY/RETURN MAINS AND CAP.

3 TERMINAL BOX TO REMAIN. EXISTING HOT WATER SUPPLY AND RETURN PIPING FROM TERMINAL BOX TO SUPPLY/RETURN MAINS TO REMAIN.

4 EXISTING HOT WATER SUPPLY AND RETURN PIPING MAINS TO ROOF-MOUNTED AIR HANDLING UNITS TO REMAIN. EXISTING BOILER AND ALL ASSOCIATED APPURTENANCES TO REMAIN.

5 ALL EXISTING HOT WATER SUPPLY AND RETURN PIPING MAINS THROUGHOUT BUILDING TO REMAIN. SOME EXISTING HOT WATER CIRCUITS TO INDIVIDUAL TERMINAL BOXES MAY BE DEMOLISHED. NEW HOT WATER CIRCUITS TO RELOCATED TERMINAL BOXES MAY BE REQUIRED. REFER KEYNOTES 2 AND 3.

6 <varies>

7 EXTEND PIPING TO RELOCATE INDICATED EXISTING HEATING WATER PIPING OUTSIDE

8 ALL HWS AND HWR PIPING UP TO AHUs SHALL REMAIN AS EXISITNG. TYP OF 5 LOCATIONS.

9 GLYCOL POT FEEDER SHALL REMAIN AS EXISTING. MECHANICAL CONTRACTOR SHALL MEASURE EXISTING GLYCOL CONCENTRATION, FLUSH AND CLEAN TANK FOR REMODEL, AND ADD GLYCOL/WATER MIXTURE TO MATCH EXISTING CONCENTRATION PRIOR TO STARTUP.

10 EXTEND PIPING TO RELOCATE INDICATED EXISTING HEATING WATER PIPING OUTSIDE FOOTPRINT OF NEW IT ROOM 119. RECONNECT AND FIELD ROUTE. NO HEATING WATER OR CHILLED WATER PIPING SHALL ROUTE DIRECTLY OVERHEAD IT ROOM 119. REFER MECHANICAL PIPING PLAN FOR NEW PROPOSED ROUTE.

COA#: 5338 Expires 06/30/2023
520 West Broadway Avenue Suite 101
Broken Arrow, Oklahoma 74012

918.895.6510 p
hpengineeringinc.com/

HP ENGINEERING

THE MCKINNEY PARTNERSHIP
architects

3600 West Main
Suite 200
Norman, Oklahoma
73072
405.360.1400 p
405.364.8287 f
tmparch.com

Copyright © 2022 The McKinney Partnership Architects, P.C., All Rights Reserved

Seal:

PROFESSIONAL ENGINEER
Nic Millard
23394
OKLAHOMA
LICENSED
11/18/22

Project:

City of Norman
Municipal Complex Renovation
Municipal Court

321 N. Webster Avenue
Norman, OK

Issue Date:
11/18/22 ISSUED FOR BIDDING

Revisions:

Project Number:
CM083319 (201253R)

Sheet Title:
MECHANICAL PIPING DEMOLITION PLAN

Sheet Number:
MD1.2

Autodesk Docs://201188K Norman Courthouse/221188K CoN County Courthouse.rvt
11/18/2022 5:35:24 PM

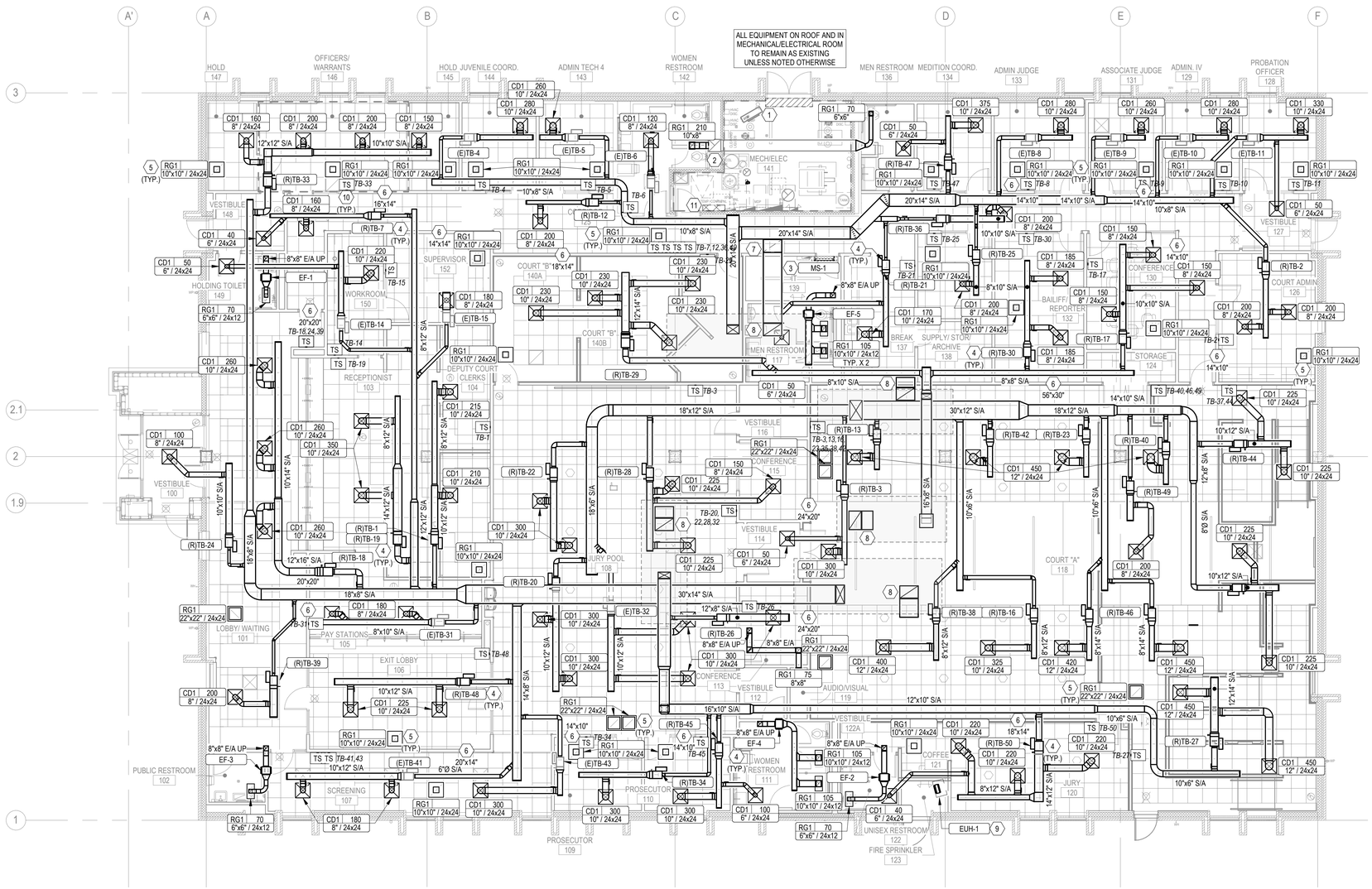

1 / M1.1 FLOOR PLAN - HVAC
1/8" = 1'-0"

HVAC SHEET NOTES

A CONTRACTOR SHALL BE RESPONSIBLE TO PROVIDE A COMPLETE AND WORKING SYSTEM.
B INSTALL, SUPPORT, & BRACE NEW DUCTWORK AND ACCESSORIES PER SMACNA GUIDELINES.
C DUCT SIZES SHOWN ARE CLEAR INSIDE DIMENSIONS. CONTRACTOR SHALL MAKE ALLOWANCE FOR ANY INTERIOR LINING, INSULATION, ETC.
D ALL NEW DUCT ELBOWS SHALL BE RADIUS TYPE. WHERE NECESSARY, CONTRACTOR MAY SUBSTITUTE MITERED ELBOWS WITH TURNING VANES.
E PROVIDE FLAT BLADE MANUAL VOLUME DAMPERS AT ALL TERMINAL DUCT BRANCHES AND AS INDICATED.
F INSTALL EQUIPMENT PER MANUFACTURER'S RECOMMENDATIONS. ROOFTOP EQUIPMENT SHALL BE LOCATED NO CLOSER THAN 10'-0" FROM THE ROOF EDGE.
G ALL PRIMARY CONDENSATE DRAIN PIPING SHALL BE INSULATED TO A MINIMUM THICKNESS OF 1/2" AND SHALL INCLUDE A VAPOR RETARDANT OUTSIDE THE INSULATION. SEAL ALL JOINTS AND PENETRATIONS.
H COORDINATE ALL EXTERIOR PENETRATIONS INCLUDING ROOF PENETRATIONS WITH OTHER TRADES TO PROVIDE A COMPLETE AND FULLY WEATHER-PROOF INSTALLATION.
I ALL TRANSFER DUCTWORK SHALL BE INTERNALLY LINED WITH MINIMUM 1/2" ACOUSTIC LINING.
J CONTRACTOR SHALL ENGAGE A TESTING AND BALANCE FIRM CERTIFIED BY AABC TO PERFORM TESTING AND BALANCING PROCEDURES ON EACH SYSTEM ACCORDING TO THE PROCEDURES CONTAINED IN AABC'S "NATIONAL STANDARDS.
K FOR TESTING AND BALANCING HEATING, VENTILATING, AND AIR CONDITIONING SYSTEMS" AND PROVIDE TWO COPIES OF THE CERTIFIED TAB REPORTS.
L THIS DRAWING IS DIAGRAMMATIC IN NATURE AND SHALL NOT BE SCALED TO DETERMINE THE EXACT LOCATION OR EXTENT OF THE WORK. CONTRACTOR SHALL VERIFY ALL EXISTING CONDITIONS PRIOR TO THE START OF THE WORK. CONTRACTOR SHALL BE RESPONSIBLE TO PROVIDE A COMPLETE AND WORKING SYSTEM.
M THIS DRAWING IS BASED ON VISUALLY OBSERVABLE EXISTING CONDITIONS AS OF THE TIME OF DESIGN. CONTRACTOR SHALL BE RESPONSIBLE TO FULLY VERIFY ALL EXISTING CONDITIONS, COMPONENTS, ETC. PRIOR TO THE START OF THE WORK. ANY DEVIATION FROM THIS DRAWING IN KIND, OR IN LOCATION EXCEEDING 1'-0", SHALL BE BROUGHT TO THE ATTENTION OF THE ENGINEER.
N PROVIDE DUCT INSULATION FOR ALL NEW DUCTWORK AS NOTED.
O ALL REFRIGERANT PIPING SHALL BE INSULATED PER MANUFACTURER'S REQUIREMENTS.

KEYNOTES

1 UNIT HEATER AND MOTORIZED LOUVER TO REMAIN AS EXISTING
2 EXHAUST DUCT UP TO ROOF IS TO REMAIN AS EXISTING. PROVIDE NEW GRILLES AND TIE INTO EXISTING EXHAUST DUCT.
3 MOUNT MINI-SPLIT WALL UNIT ABOVE DOOR USING MANUFACTURER'S MOUNTING KIT. REFER MANUFACTURER MOUNTING INSTRUCTIONS. FIELD LOCATE AND MOUNT MINI-SPLIT CONDENSING UNIT ON ROOF MINIMUM 10'-0" FROM ROOF EDGE. MAINTAIN MANUFACTURER'S REQUIRED CLEARANCES FROM OTHER EQUIPMENT ON ROOF. ROUTE REFRIGERANT LINES TO INDOOR UNIT AS NEEDED. ROUTE PUMPED CONDENSATE FROM INDOOR UNIT UP TO ABOVE CEILING. TRANSITION TO GRAVITY DRAIN AND SLOPE AT 1/8" PER FOOT TO NEAREST APPROVED RECEPTACLE. TERMINATE WITH AIR GAP.
4 VAV TERMINAL UNITS SHALL NOT BE LOCATED DIRECTLY ABOVE ANY LIGHTING FIXTURES THROUGHOUT BUILDING. TYP OF ALL VAVs.
5 PROVIDE SOUND BOOT ON ALL UNDUCTED RETURN GRILLES. SOUND BOOT SHALL BE BLACK. REFER TO RETURN AIR SOUND TRAP DETAIL. TYP OF ALL.
6 WALL EXTENDS FROM FLOOR TO ROOF DECK. PROVIDE OPENING IN WALL MINIMUM 12" ABOVE CEILING FOR RETURN AIR TRANSFER. REFER PLANS FOR OPENING SIZE.
7 RETURN DUCT ELBOW UP. COVER OPENING WITH 1/4" GALVANIZED HARDWARE CLOTH FASTENED TO DUCT WITH TEK SCREWS 3" ON CENTERS.
8 RETURN DUCT MAIN DROP INTO PLENUM SPACE. COVER OPENING WITH 1/4" GALVANIZED HARDWARE CLOTH FASTENED TO DUCT WITH TEK SCREWS 3" ON CENTERS AND COORDINATE WITH ELECTRICAL AND CONTROLS CONTRACTORS TO PROVIDE PLENUM RATED CABLING.
9 SUSPEND UNIT HEATER FROM CONCRETE STRUCTURE WITH MANUFACTURER'S MOUNTING KIT. SET TEMPERATURE TO 50°F TO PREVENT FREEZING.
10 PROVIDE NEW REMOTE TEMPERATURE SENSOR WITH CONTROLLER LOCATED IN MECHANICAL ROOM.
11 RELOCATE HVAC CONTROL PANEL APPROXIMATELY 6" AWAY FROM DOOR AND COORDINATE WITH CONTROLS CONTRACTOR TO PROVIDE REMOTE THERMOSTATS AS SHOWN.

THE MCKINNEY PARTNERSHIP
architects
3600 West Main
Suite 200
Norman, Oklahoma
73072
405.360.1400 p
405.364.8287 f
tmparch.com

Copyright © 2022 The McKinney Partnership Architects, P.C., All Rights Reserved

Seal:

LICENSED PROFESSIONAL ENGINEER
Nic Millard
23394
OKLAHOMA
11/18/22

Project:

City of Norman Municipal Complex Renovation
Municipal Court
321 N. Webster Avenue
Norman, OK

Issue Date:
11/18/22 ISSUED FOR BIDDING

Revisions:

Project Number:
CM083319 (201253R)

Sheet Title:
HVAC PLAN

Sheet Number:
M1.1

COA#: 5338 Expires 06/30/2023
520 West Broadway Avenue Suite 101
Broken Arrow, Oklahoma 74012

918.895.6510 p
hpengineeringinc.com/

HP ENGINEERING

Autodesk Docs://201188K Norman Courthouse/221188K CoN County Courthouse.rvt
11/18/2022 5:34:56 PM

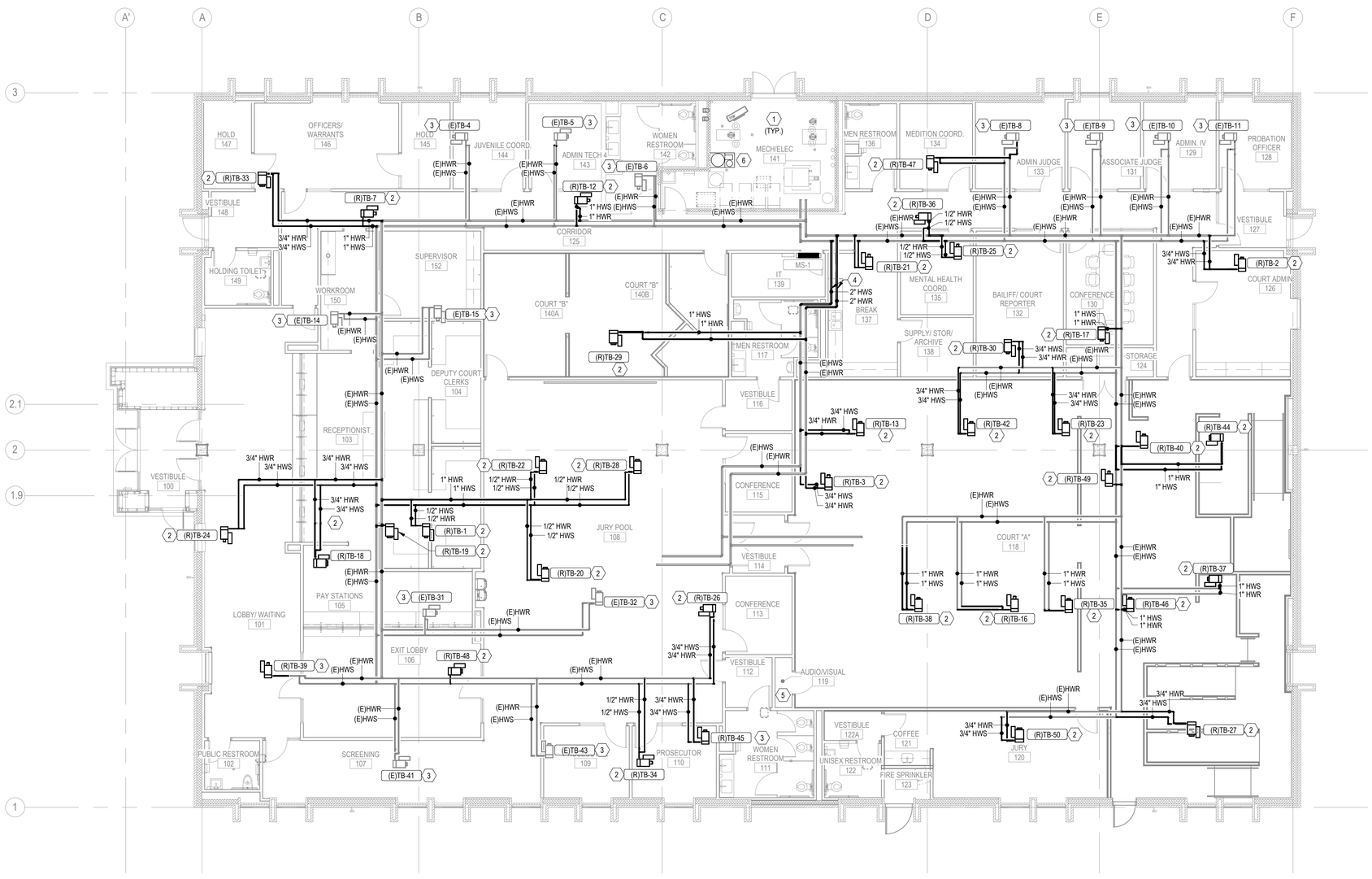

1 M1.2 MECHANICAL PIPING PLAN
1/8" = 1'-0"

HVAC SHEET NOTES

A CONTRACTOR SHALL BE RESPONSIBLE TO PROVIDE A COMPLETE AND WORKING SYSTEM.
B INSTALL, SUPPORT, & BRACE NEW DUCTWORK AND ACCESSORIES PER SMACNA GUIDELINES.
C DUCT SIZES SHOWN ARE CLEAR INSIDE DIMENSIONS. CONTRACTOR SHALL MAKE ALLOWANCE FOR ANY INTERIOR LINING, INSULATION, ETC.
D ALL NEW DUCT ELBOWS SHALL BE RADIUS TYPE. WHERE NECESSARY, CONTRACTOR MAY SUBSTITUTE MITERED ELBOWS WITH TURNING VANES.
E PROVIDE FLAT BLADE MANUAL VOLUME DAMPERS AT ALL TERMINAL DUCT BRANCHES AND AS INDICATED.
F INSTALL EQUIPMENT PER MANUFACTURER'S RECOMMENDATIONS. ROOFTOP EQUIPMENT SHALL BE LOCATED NO CLOSER THAN 10'-0" FROM THE ROOF EDGE.
G ALL PRIMARY CONDENSATE DRAIN PIPING SHALL BE INSULATED TO A MINIMUM THICKNESS OF 1/2" AND SHALL INCLUDE A VAPOR RETARDANT OUTSIDE THE INSULATION. SEAL ALL JOINTS AND PENETRATIONS.
H COORDINATE ALL EXTERIOR PENETRATIONS INCLUDING ROOF PENETRATIONS WITH OTHER TRADES TO PROVIDE A COMPLETE AND FULLY WEATHER-PROOF INSTALLATION.
I ALL TRANSFER DUCTWORK SHALL BE INTERNALLY LINED WITH MINIMUM 1/2" ACOUSTIC LINING.
J CONTRACTOR SHALL ENGAGE A TESTING AND BALANCE FIRM CERTIFIED BY AABC TO PERFORM TESTING AND BALANCING PROCEDURES ON EACH SYSTEM ACCORDING TO THE PROCEDURES CONTAINED IN AABC'S "NATIONAL STANDARDS.
K FOR TESTING AND BALANCING HEATING, VENTILATING, AND AIR CONDITIONING SYSTEMS" AND PROVIDE TWO COPIES OF THE CERTIFIED TAB REPORTS.
L THIS DRAWING IS DIAGRAMMATIC IN NATURE AND SHALL NOT BE SCALED TO DETERMINE THE EXACT LOCATION OR EXTENT OF THE WORK. CONTRACTOR SHALL VERIFY ALL EXISTING CONDITIONS PRIOR TO THE START OF THE WORK. CONTRACTOR SHALL BE RESPONSIBLE TO PROVIDE A COMPLETE AND WORKING SYSTEM.
M THIS DRAWING IS BASED ON VISUALLY OBSERVABLE EXISTING CONDITIONS AS OF THE TIME OF DESIGN. CONTRACTOR SHALL BE RESPONSIBLE TO FULLY VERIFY ALL EXISTING CONDITIONS, COMPONENTS, ETC. PRIOR TO THE START OF THE WORK. ANY DEVIATION FROM THIS DRAWING IN KIND, OR IN LOCATION EXCEEDING 1'-0", SHALL BE BROUGHT TO THE ATTENTION OF THE ENGINEER.
N PROVIDE DUCT INSULATION FOR ALL NEW DUCTWORK AS NOTED.
O ALL REFRIGERANT PIPING SHALL BE INSULATED PER MANUFACTURER'S REQUIREMENTS.

KEYNOTES

1 NO WATER PIPING SHALL ROUTE ABOVE ELECTRICAL PANELS.
2 EXTEND NEW 3/4" SUPPLY AND RETURN HOT WATER PIPING TO RELOCATED TERMINAL BOX FROM NEAREST HOT WATER SUPPLY AND RETURN MAINS.
3 EXISTING TERMINAL BOX AND ASSOCIATED HOT WATER PIPING TO REMAIN. TERMINAL BOX MAY NEED ADJUSTMENT IN ORIENTATION FOR SUPPLY AIR DIRECTION. REFER HVAC PLAN FOR CORRECT ORIENTATION.
4 EXTEND EQUIVALENTLY SIZED HWS & HWR PIPING TO RELOCATE INDICATED EXISTING HEATING WATER PIPING OUTSIDE FOOTPRINT OF NEW IT ROOM 139. RECONNECT AND FIELD ROUTE. NO HEATING WATER OR CHILLED WATER PIPING SHALL ROUTE DIRECTLY OVERHEAD IT ROOM 139.
5 EXTEND PIPING TO RELOCATE INDICATED EXISTING HEATING WATER PIPING OUTSIDE FOOTPRINT OF NEW A/V ROOM 119. RECONNECT AND FIELD ROUTE. NO HEATING WATER OR CHILLED WATER PIPING SHALL ROUTE DIRECTLY OVERHEAD A/V ROOM 119.
6 GLYCOL POT FEEDER SHALL REMAIN AS EXISTING. MECHANICAL CONTRACTOR SHALL MEASURE EXISTING GLYCOL CONCENTRATION, FLUSH AND CLEAN TANK FOR REMODEL, AND ADD GLYCOL/WATER MIXTURE TO MATCH EXISTING CONCENTRATION PRIOR TO STARTUP.

THE MCKINNEY PARTNERSHIP
architects
3600 West Main
Suite 200
Norman, Oklahoma
73072
405.360.1400 p
405.364.8287 f
tmparch.com

Copyright © 2022 The McKinney Partnership Architects, P.C., All Rights Reserved

Seal:

PROFESSIONAL ENGINEER
Nic Millard
23394
OKLAHOMA
11/18/22

Project:

City of Normans Municipal Complex Renovation
Municipal Court
321 N. Webster Avenue
Norman, OK

Issue Date:
11/18/22 ISSUED FOR BIDDING

Revisions:

Project Number:
CM083319 (201253R)

Sheet Title:
MECHANICAL PIPING PLAN

Sheet Number:
M1.2

COA#: 5338 Expires 06/30/2023
520 West Broadway Avenue Suite 101
Broken Arrow, Oklahoma 74012

918.895.6510 p
hpengineeringinc.com/
HP ENGINEERING

Autodesk Docs://201188K Norman Courthouse/221188K CoN County Courthouse.rvt
11/18/2022 5:35:04 PM

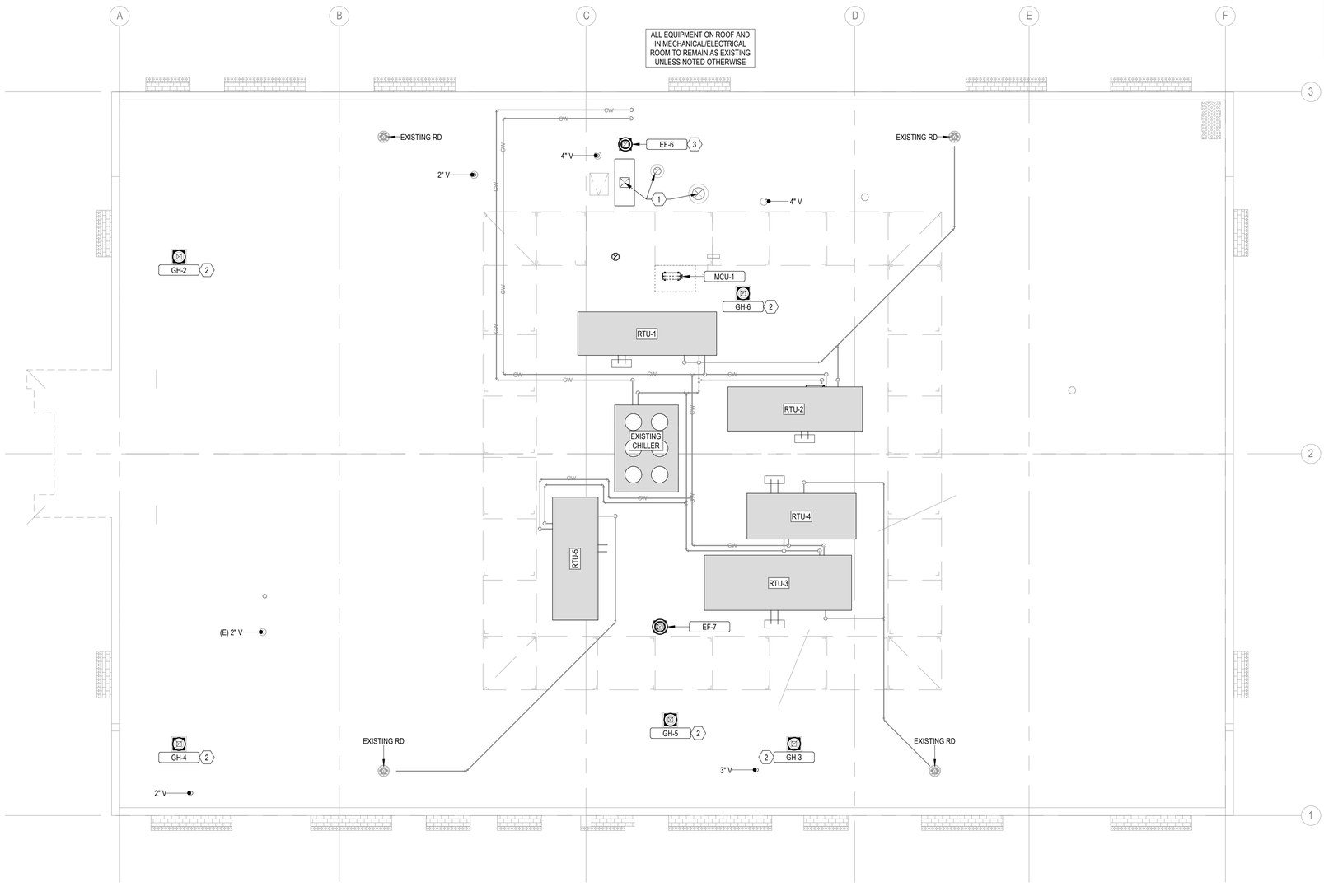

1 M1.5 ROOF MECHANICAL PLAN
1/8" = 1'-0"

HVAC SHEET NOTES

A CONTRACTOR SHALL BE RESPONSIBLE TO PROVIDE A COMPLETE AND WORKING SYSTEM.
B INSTALL, SUPPORT, & BRACE NEW DUCTWORK AND ACCESSORIES PER SMACNA GUIDELINES.
C DUCT SIZES SHOWN ARE CLEAR INSIDE DIMENSIONS. CONTRACTOR SHALL MAKE ALLOWANCE FOR ANY INTERIOR LINING, INSULATION, ETC.
D ALL NEW DUCT ELBOWS SHALL BE RADIUS TYPE. WHERE NECESSARY, CONTRACTOR MAY SUBSTITUTE MITERED ELBOWS WITH TURNING VANES.
E PROVIDE FLAT BLADE MANUAL VOLUME DAMPERS AT ALL TERMINAL DUCT BRANCHES AND AS INDICATED.
F INSTALL EQUIPMENT PER MANUFACTURER'S RECOMMENDATIONS. ROOFTOP EQUIPMENT SHALL BE LOCATED NO CLOSER THAN 10'-0" FROM THE ROOF EDGE.
G ALL PRIMARY CONDENSATE DRAIN PIPING SHALL BE INSULATED TO A MINIMUM THICKNESS OF 1/2" AND SHALL INCLUDE A VAPOR RETARDANT OUTSIDE THE INSULATION. SEAL ALL JOINTS AND PENETRATIONS.
H COORDINATE ALL EXTERIOR PENETRATIONS INCLUDING ROOF PENETRATIONS WITH OTHER TRADES TO PROVIDE A COMPLETE AND FULLY WEATHER-PROOF INSTALLATION.
I ALL TRANSFER DUCTWORK SHALL BE INTERNALLY LINED WITH MINIMUM 1/2" ACOUSTIC LINING.
J CONTRACTOR SHALL ENGAGE A TESTING AND BALANCE FIRM CERTIFIED BY AABC TO PERFORM TESTING AND BALANCING PROCEDURES ON EACH SYSTEM ACCORDING TO THE PROCEDURES CONTAINED IN AABC'S "NATIONAL STANDARDS.
K FOR TESTING AND BALANCING HEATING, VENTILATING, AND AIR CONDITIONING SYSTEMS" AND PROVIDE TWO COPIES OF THE CERTIFIED TAB REPORTS.
L THIS DRAWING IS DIAGRAMMATIC IN NATURE AND SHALL NOT BE SCALED TO DETERMINE THE EXACT LOCATION OR EXTENT OF THE WORK. CONTRACTOR SHALL VERIFY ALL EXISTING CONDITIONS PRIOR TO THE START OF THE WORK. CONTRACTOR SHALL BE RESPONSIBLE TO PROVIDE A COMPLETE AND WORKING SYSTEM.
M THIS DRAWING IS BASED ON VISUALLY OBSERVABLE EXISTING CONDITIONS AS OF THE TIME OF DESIGN. CONTRACTOR SHALL BE RESPONSIBLE TO FULLY VERIFY ALL EXISTING CONDITIONS, COMPONENTS, ETC. PRIOR TO THE START OF THE WORK. ANY DEVIATION FROM THIS DRAWING IN KIND, OR IN LOCATION EXCEEDING 1'-0", SHALL BE BROUGHT TO THE ATTENTION OF THE ENGINEER.
N PROVIDE DUCT INSULATION FOR ALL NEW DUCTWORK AS NOTED.
O ALL REFRIGERANT PIPING SHALL BE INSULATED PER MANUFACTURER'S REQUIREMENTS.

KEYNOTES

1 FLUE, VENT, COMBUSTION AIR DUCTS, WEATHERHOODS, AND PIPING PENETRATING ROOF SHALL REMAIN AS EXISTING.
2 MOUNT GRAVITY HOOD ON ROOF AND LOCATE 10'-0" MINIMUM FROM OUTSIDE AIR INTAKES.
3 REPLACE EXISTING EXHAUST FAN AND TIE INTO EXISTIING DUCTWORK.

THE MCKINNEY PARTNERSHIP
architects

3600 West Main
Suite 200
Norman, Oklahoma
73072
405.360.1400 p
405.364.8287 f
tmparch.com

Copyright © 2022 The McKinney Partnership Architects, P.C., All Rights Reserved

Seal:

PROFESSIONAL ENGINEER
Nic Millard
23394
OKLAHOMA
LICENSED
11/18/22

Project:

City of Norman
Municipal Complex Renovation
Municipal Court
321 N. Webster Avenue
Norman, OK

Issue Date:
11/18/22 ISSUED FOR BIDDING

Revisions:

Project Number:
CM083319 (201253R)

Sheet Title:
MECHANICAL ROOF PLAN

Sheet Number:
M1.5

COA#: 5338 Expires 06/30/2023
520 West Broadway Avenue Suite 101
Broken Arrow, Oklahoma 74012

918.895.6510 p
hpengineeringinc.com/

HP ENGINEERING

Autodesk Docs://201188K Norman Courthouse/221188K CoN County Courthouse.rvt
11/18/2022 5:35:07 PM

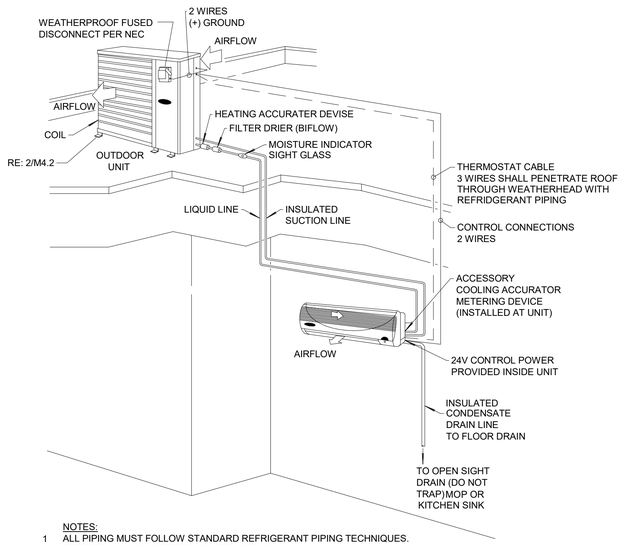

NOTES:

1 ALL PIPING MUST FOLLOW STANDARD REFRIGERANT PIPING TECHNIQUES. REFER TO MANUFACTURERS SYSTEM DESIGN MANUAL.

2 ALL WIRING MUST COMPLY WITH THE APPLICABLE LOCAL AND NATIONAL CODES.

3 LIQUID LINE NEED NOT BE INSULATED

4 WIRING AND PIPING SHOWN ARE GENERAL POINTS-OF-CONNECTION GUIDES ONLY AND ARE NOT INTENDED FOR A SPECIFIC INSTALLATION.

5 INSULATE CONDENSATE DRAIN IF INSTALLED IN A CONDITIONED SPACE.

7 / M5.1 DUCTLESS SPLIT SYSTEM
NOT TO SCALE

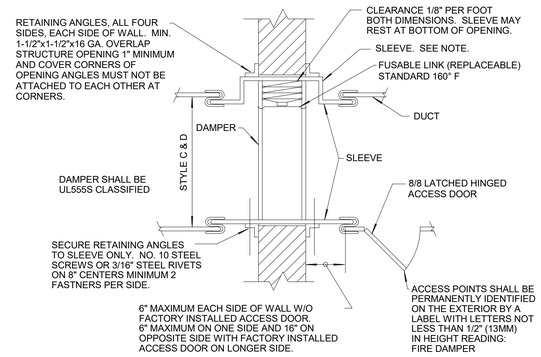

NOTE. MINIMUM SLEEVE THICKNESS

12" - DOWN	26 GA.
13" - 30"	24 GA.
31" - 54"	22 GA.
55" - 84"	20 GA.
85" - UP	18 GA.

SFM NOTES:

1. FIRE DAMPER DETAIL FOR REFERENCE ONLY.
2. FIRE DAMPER SHALL BE STATE FIRE MARSHAL APPROVED AND INSTALLED STRICTLY PER MANUFACTURER'S PRINTED INSTRUCTIONS.
3. MANUFACTURER'S INSTALLATION INSTRUCTIONS SHALL BE MADE AVAILABLE TO THE INSPECTION AUTHORITIES.
4. SUBMIT SHOP DRAWINGS FOR APPROVAL PRIOR TO INSTALLATION.

6 / M5.1 SQUARE FIRE DAMPER
NOT TO SCALE

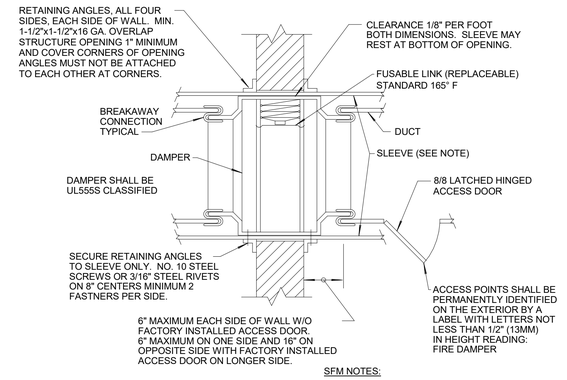

NOTE. MINIMUM SLEEVE THICKNESS

12" - DOWN	26 GA.
13" - 30"	24 GA.
31" - 54"	22 GA.
55" - 84"	20 GA.
85" - UP	18 GA.

SFM NOTES:

1. FIRE DAMPER DETAIL FOR REFERENCE ONLY.
2. FIRE DAMPER SHALL BE STATE FIRE MARSHAL APPROVED AND INSTALLED STRICTLY PER MANUFACTURER'S PRINTED INSTRUCTIONS.
3. MANUFACTURER'S INSTALLATION INSTRUCTIONS SHALL BE MADE AVAILABLE TO THE INSPECTION AUTHORITIES.
4. SUBMIT SHOP DRAWINGS FOR APPROVAL PRIOR TO INSTALLATION.

5 / M5.1 ROUND FIRE DAMPER
NOT TO SCALE

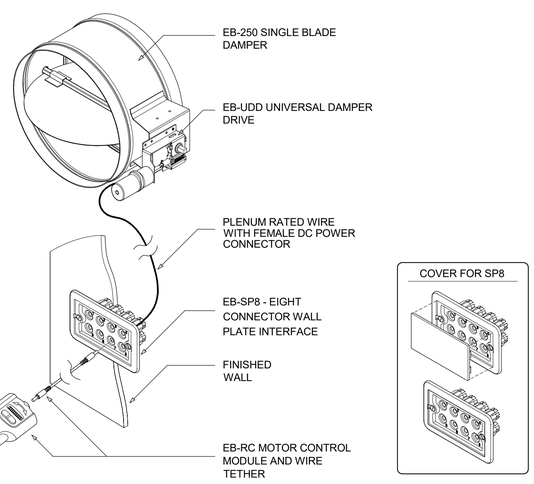

4 / M5.1 ROTO-TWIST BALANCING DAMPER
NOT TO SCALE

NOTES:
1. REFER TO HVAC FLOOR PLANS FOR DUCT SIZES
2. REFER TO SCHEDULES FOR GRILLES, REGISTERS, DIFFUSERS AND TERMINAL SIZES AND TYPES
3. PROVIDE A MANUAL TYPE BALANCING DAMPER FOR EACH SUPPLY OUTLET AND RETURN INLET
4. ALL DUCT RUNOUTS TO DIFFUSERS SHALL BE THE SAME SIZE AS DIFFUSER NECK SIZE, UNLESS OTHERWISE NOTED
5. FLEX DUCT WILL NOT BE ALLOWED ON RETURN OR EXHAUST DUCTWORK SYSTEMS
6. PROVIDE 12" AIR CUSHION AT THE END OF EACH SUPPLY MAIN AND BRANCH DUCT
7. INDIVIDUAL BRANCH BALANCING DAMPERS NOT REQUIRED FOR SUPPLY OR EXHAUST REGISTERS

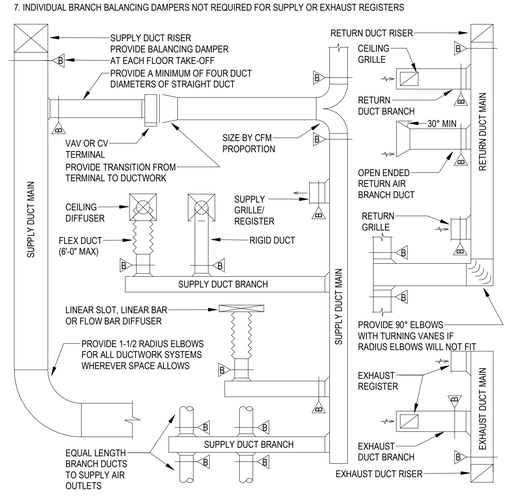

3 / M5.1 DUCTWORK INSTALLATION DIAGRAM
NOT TO SCALE

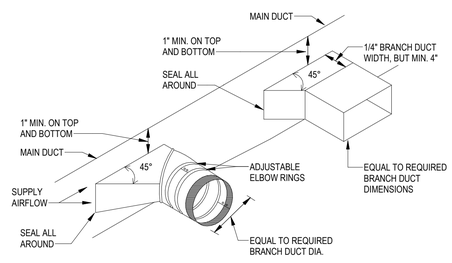

2 / M5.1 TYPICAL BRANCH TAKEOFF FITTING DETAIL
NOT TO SCALE

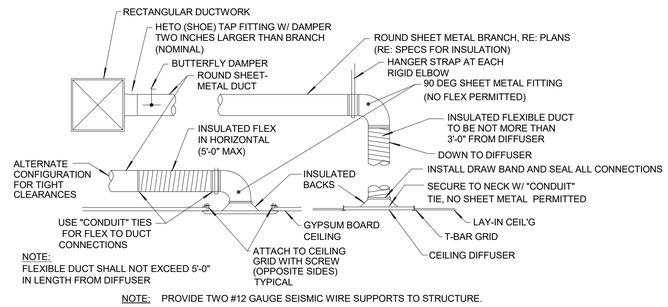

NOTE: FLEXIBLE DUCT SHALL NOT EXCEED 5'-0" IN LENGTH FROM DIFFUSER

NOTE: PROVIDE TWO #12 GAUGE SEISMIC WIRE SUPPORTS TO STRUCTURE.

1 / M5.1 BRANCH DUCT DETAIL
NOT TO SCALE

COA#: 5338 Expires 06/30/2023
520 West Broadway Avenue Suite 101
Broken Arrow, Oklahoma 74012

918.895.6510 p
hpengineeringinc.com/

HP ENGINEERING

THE MCKINNEY PARTNERSHIP
architects

3600 West Main
Suite 200
Norman, Oklahoma
73072
405.360.1400 p
405.364.8287 f
tmparch.com

Copyright © 2022 The McKinney Partnership Architects, P.C., All Rights Reserved

Seal:

PROFESSIONAL ENGINEER
Nic Millard
23394
OKLAHOMA
11/18/22

Project:

City of Norman
Municipal Complex Renovation
Municipal Court
321 N. Webster Avenue
Norman, OK

Issue Date:
11/18/22 ISSUED FOR BIDDING

Revisions:

Project Number:
CM083319 (201253R)

Sheet Title:
MECHANICAL DETAILS

Sheet Number:
M5.1

Autodesk Docs://201188K Norman Courthouse/221188K CoN County Courthouse.rvt
11/18/2022 5:35:09 PM

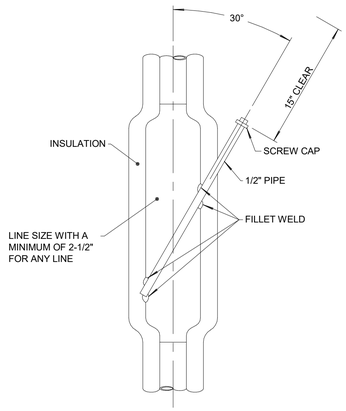

10 M5.2 THERMOMETER WELL
NOT TO SCALE

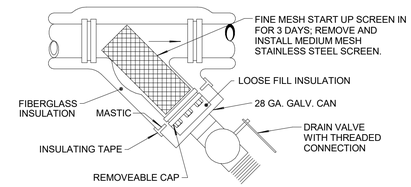

9 M5.2 Y-STRAINER
NOT TO SCALE

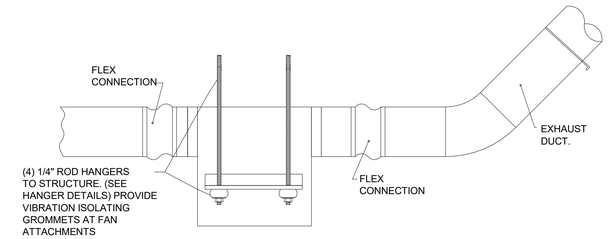

8 M5.2 INLINE EXHAUST FAN
NOT TO SCALE

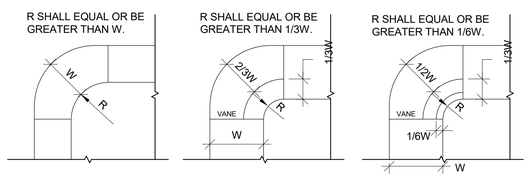

NOTE:
1. THE INTERIOR SURFACE OF ALL RADIUS ELBOWS SHALL BE MADE ROUND.
2. ALL STANDARD RADIUS ELBOWS CAN BE SUBSTITUTED WITH SHORT RADIUS ELBOWS. ALL SHORT RADIUS ELBOWS SHALL HAVE VANES. VANES SHALL BE CONSTRUCTED, SUPPORTED AND FASTENED AS RECOMMENDED BY SMACNA.

7 M5.2 DUCTWORK RADIUS CONNECTIONS
NOT TO SCALE

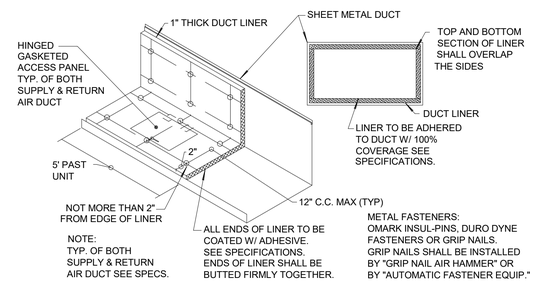

6 M5.2 DUCT LINER DETAIL
NOT TO SCALE

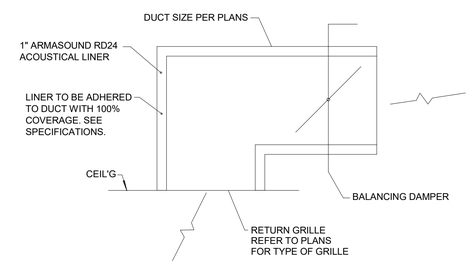

5 M5.2 RETURN AIR PLENUM SOUND TRAP
NOT TO SCALE

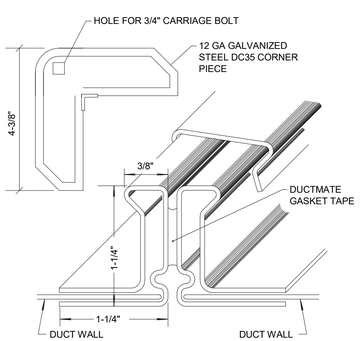

NOTE:
ALL FOR CORNERS ARE TO BE INSTALLED WITH DUCTMATE DC35 CORNER PIECES (4) WITH STAINLESS STEEL 3/4" CARRIAGE BOLT, NUT AND LOCK-WASHER.

4 M5.2 DUCTMATE CONNECTIONS
NOT TO SCALE

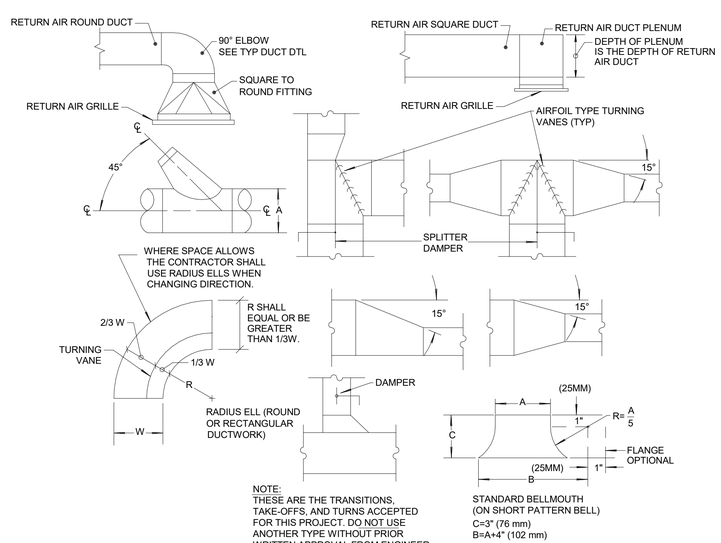

3 M5.2 TYPICAL DUCT FITTING DETAILS
NOT TO SCALE

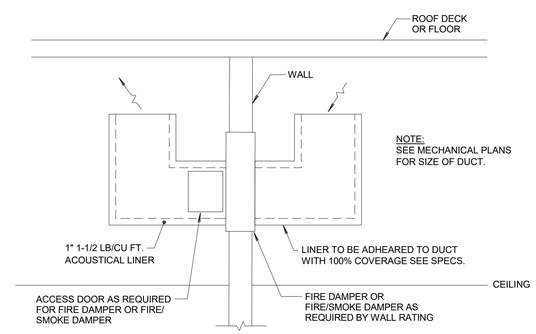

VERTICAL INSTALLATION

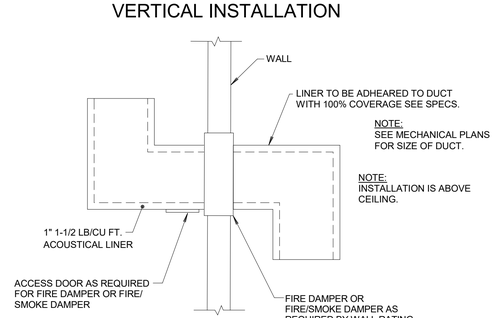

HORIZONTAL INSTALLATION

2 M5.2 TYPICAL PLENUM TRANSFER DETAIL
NOT TO SCALE

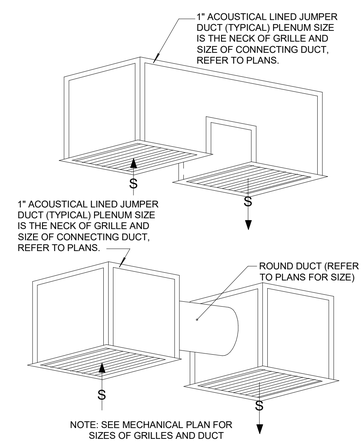

1 M5.2 TYPICAL JUMPER DUCT DETAIL
NOT TO SCALE

COA#: 5338 Expires 06/30/2023
520 West Broadway Avenue Suite 101
Broken Arrow, Oklahoma 74012

918.895.6510 p
hpengineeringinc.com/

HP ENGINEERING

THE MCKINNEY PARTNERSHIP
architects

3600 West Main
Suite 200
Norman, Oklahoma
73072
405.360.1400 p
405.364.8287 f
tmparch.com

Copyright © 2022 The McKinney Partnership Architects, P.C., All Rights Reserved

Seal:

PROFESSIONAL ENGINEER
Nic Millard
23394
OKLAHOMA
11/18/22

Project:

City of Norman
Municipal Complex Renovation
Municipal Court
321 N. Webster Avenue
Norman, OK

Issue Date:
11/18/22 ISSUED FOR BIDDING

Revisions:

Project Number:
CM083319 (201253R)

Sheet Title:
MECHANICAL DETAILS

Sheet Number:
M5.2

Autodesk Docs://201188K Norman Courthouse/221188K CoN County Courthouse.rvt
11/18/2022 5:35:11 PM

CONTROLS GENERAL NOTES:
MECHANICAL CONTRACTOR SHALL SUBCONTRACT WITH ES2 COMPANY, OKLAHOMA CITY, OK FOR ALL CONTROLS WORK. PH. (405) 528-4500

CONTROLS CONTRACTOR SHALL BE RESPONSIBLE TO PROVIDE A SYSTEM OF CONTROLS INCLUDING CONTROLLERS, VALVES, DAMPERS, SENSORS, SWITCHES ACTUATORS, WIRING, RELAYS, PROGRAMMING, AND COMMISSIONING AS REQUIRED TO PROVIDE THE DESIRED SEQUENCE OF OPERATION. PROVIDE INTEGRATED WIRING DIAGRAMS SHOWING INTERACTIONS BETWEEN FIELD INSTALLED EQUIPMENT AND WIRING PROVIDED WITH THE HVAC EQUIPMENT.

REFERENCE MECHANICAL DRAWINGS FOR LOCATION OF ALL CONTROLS RELATED ITEMS.

PROVIDE SUPERVISION AND JOG CHECKOUT SERVICE AS REQUIRED TO ENSURE THAT THE INSTALLATION MEETS REQUIREMENTS OF THE DRAWINGS AND SPECIFICATIONS. THE SYSTEM SHALL BE GUARANTEED FOR A PERIOD OF ONE YEAR FOLLOWING THE ACCEPTANCE OF THE SYSTEM BY THE ARCHITECT/ENGINEER, CORRECT DEFECTS OCCURING DURING THAT PERIOD AT NO COST TO THE OWNER.

ALL EXISTING EQUIPMENT AND CONTROLLERS TO REMAIN OR TO BE RELOCATED SHALL BE FULLY COMMISSIONED AT COMPLETION OF WORK. PROVIDE A LIST OF ANY BROKEN OR MALFUNCTIONING EQUIPMENT TO THE GENERAL CONTRACTOR. EXISTING EQUIPMENT TO BE COMMISSIONED INCLUDES CHILLED AND HEATING WATER SYSTEMS, ATUS, VAV BOXES, AND FANS.

CONTRACTOR SHALL PROVIDE REMOTE 'READ ONLY ACCESS OF THE CONTROLS TO THE ENGINEER FOR A MI IMUM PERIOD OF ONE YEAR AFTER SUBSTANTIAL COMPLETION. ACCESS SHALL INCLUDE ABILITY TO SEE AND SET UP TRENDS OF ALL AVAILABLE POINTS. PROVIDE MINIMUM ALLOWANCE OF 8 HOURS ON SITE OR REMOTE TO ASSIST THE ENGINEER WITH FUNCTIONAL TESTING OF PROPER OPERATION OF EQUIPMENT

F RATING - 2 HR
T RATINGS - 0 & 1 HR (SEE ITEM 4)

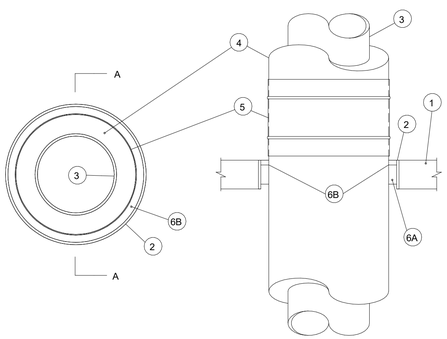

SECTION A-A

1. FLOOR OR WALL ASSEMBLY - MIN 4-1/2 IN. THICK REINFORCED LIGHTWEIGHT OR NORMAL WEIGHT (100-150 PCF) CONCRETE. WALL MAY ALSO BE CONSTRUCTED OF ANY UL CLASSIFIED CONCRETE BLOCKS*. MAX DIAM OF OPENING IS 22 IN. SEE CONCRETE BLOCKS (CAZT) CATEGORY IN THE FIRE RESISTANCE DIRECTORY FOR NAMES OF MANUFACTURERS.
2. METALLIC SLEEVE (OPTIONAL) - NOM 22 IN. DIAM (OR SMALLER) SCHEDULE 40 STEEL PIPE CAST OR GROUTED INTO FLOOR OR WALL ASSEMBLY, FLUSH WITH FLOOR OR WALL SURFACES.
3. THROUGH PENETRANTS - ONE METALLIC PIPE OR TUBING TO BE POSITIONED WITHIN THE FIRESTOP SYSTEM. PIPE OR TUBING TO BE RIGIDLY SUPPORTED ON BOTH SIDES OF FLOOR OR WALL ASSEMBLY. THE FOLLOWING TYPES AND SIZES OF METALLIC PIPES OR TUBING MAY BE USED:
   A. STEEL PIPE - NOM 12 IN. DIAM (OR SMALLER) SCHEDULE 40 (OR HEAVIER) STEEL PIPE.
   B. COPPER TUBING - NOM 6 IN. DIAM (OR SMALLER) TYPE L (OR HEAVIER) COPPER TUBING.
   C. COPPER PIPE - NOM 6 IN. DIAM (OR SMALLER) REGULAR (OR HEAVIER) COPPER PIPE.

F RATING - 2 HR
T RATINGS - 0 & 1 HR (SEE ITEM 4)

4. PIPE COVERING MATERIALS* - CELLULAR GLASS INSULATION - NOM 1-1/2 IN. OR 3 IN. THICK CELLULAR GLASS PIPE INSULATION SIZED TO THE OUTSIDE DIAM OF THE STEEL PIPE OR TUBE AND INSTALLED IN ACCORDANCE WITH THE MANUFACTURER'S INSTRUCTIONS. T RATING IS 0 HR WHEN NOM 1-1/2 IN. THICK PIPE INSULATION IS USED. T RATING IS 1 HR WHEN NOM 3 IN. THICK PIPE INSULATION IS USED. THE ANNULAR SPACE SHALL BE MIN 3/4 IN. TO MAX 3 IN.

5. METAL JACKET - MIN 12 IN. LONG JACKET FORMED OF MIN 0.010 IN. THICK STEEL OR ALUMINUM SHEET CUT TO WRAP TIGHTLY AROUND THE PIPE INSULATION WITH A MIN 2 IN. LAP. JACKET SECURED WITH MIN 1/2 IN. WIDE STAINLESS STEEL HOSE CLAMPS OR BANDS LOCATED WITHIN 2 IN. OF EACH END OF THE JACKET AND SPACED A MAX OF 10 IN. OC. JACKET TO BE INSTALLED WITH ABUTTING SURFACE OF SEALANT (ITEM 6B) ON TOP OF FLOOR OR BOTH SURFACES OF WALL.

6. FIRESTOP SYSTEM - THE FIRESTOP SYSTEM SHALL CONSIST OF THE FOLLOWING:
   A. PACKING MATERIAL - MIN 3 IN. THICKNESS OF MIN 4.0 PCF MINERAL WOOL BATT INSULATION FIRMLY PACKED INTO OPENING AS A PERMANENT FORM. PACKING MATERIAL TO BE RECESSED FROM TOP SURFACE OF FLOOR OR FROM BOTH SURFACES OF WALL AS REQUIRED TO ACCOMMODATE THE REQUIRED THICKNESS OF FILL MATERIAL.
   B. FILL, VOID OR CAVITY MATERIAL* - SEALANT - MIN 3/4 IN. THICKNESS OF FILL MATERIAL APPLIED WITHIN THE ANNULUS, FLUSH WITH THE TOP SURFACE OF THE FLOOR OR WITH BOTH SURFACES OF THE WALL. MATERIAL TO BE IN TUMESCENT FIRE-STOP SEALANT BEARING UL CLASSIFICATION MARKING.

INSTALLATION INSTRUCTIONS FOR UL NO. CAJ5069

STEP 1 PREPARATION: ALL SURFACES MUST BE CLEAN, SOUND, DRAY AND FROST FREE PRIOR TO APPLICATION OF FIRESTOPPING MATERIALS.

STEP 2 PACKING MATERIAL: FIRMLY PACK REQUIRED DEPTH OF MINERAL WALL AROUND PENETRATION ITEM AS PERMINANET FORM. PACKING MATERIAL SHOULD BE RECESSED FROM TOP OF FLOOR OR FROM BOTH SURFACES OF WALL AS REQUIRED TO ACCOMMODATE THE REQUIRE THICKNESS OF FIRESTOP SEALANT.

STEP 3 FIRESTOP SEALANT: APPLY THE REQUIRED DEPTH OF FIRESTOP SEALANT OVER THE PACKING MATERIAL WITHIN THE ANNULUS. WALL PENETRATIONS REQUIRE FIRESTOP SEALANT INSTALLED ON BOTH SIDES. TOOL THE SEALANT WITH A PUTTY KNIFE TO PUSH IT IN PLACE AND SMOOTH THE SURFACE. LEAVE COMPLETED SEAL UNDISTURBED FOR 48 HOURS.

STEP 4 INSULATION: INSTALL 12" LONG STEEL OR ALUMINIUM JACKET AROUND INSULATION FLUSH WITH TOP OF FLOOR OR BOTH SIDES OF WALL.

1 / M5.3 PIPING FIRE PROTECTION SEAL
NOT TO SCALE

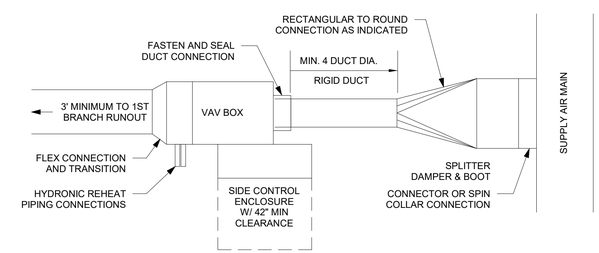

4 / M5.3 DUCT-VAV TERMINAL CONNECTION
NOT TO SCALE

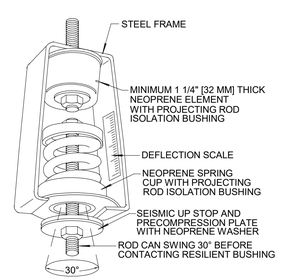

3 / M5.3 SPRING ISOLATOR
NOT TO SCALE

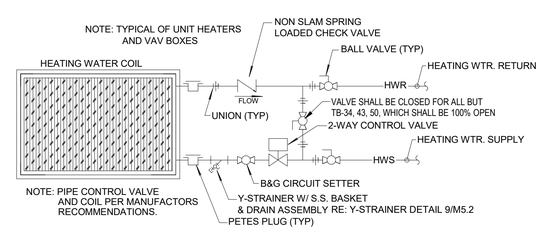

2 / M5.3 HEATING WATER COIL PIPING DIAGRAM
NOT TO SCALE

COA#: 5338 Expires 06/30/2023
520 West Broadway Avenue Suite 101
Broken Arrow, Oklahoma 74012

918.895.6510 p
hpengineeringinc.com/

HP ENGINEERING

THE MCKINNEY PARTNERSHIP
architects

3600 West Main
Suite 200
Norman, Oklahoma
73072
405.360.1400 p
405.364.8287 f
tmparch.com

Copyright © 2022 The McKinney Partnership Architects, P.C., All Rights Reserved

Seal:

Project:

City of Norman
Municipal Complex Renovation
Municipal Court

321 N. Webster Avenue
Norman, OK

Issue Date:
11/18/22 ISSUED FOR BIDDING

Revisions:

Project Number:
CM083319 (201253R)

Sheet Title:
MECHANICAL DETAILS

Sheet Number:
M5.3

Autodesk Docs://201188K Norman Courthouse/221188K ColN County Courthouse.rvt
11/18/2022 5:35:12 PM

(EXISTING/RELOCATED) VARIABLE AIR VOLUME TERMINAL UNIT SCHEDULE

	LOCATION					PRIMARY AIRFLOW		HEATING COIL						
								AIRSIDE					WATERSIDE		
ID	NAME	NO.	MANUFACTURER	MODEL NO.	NECK SIZE	MAX	MIN	CAP	DESIGN FLOW	EAT(db)	LAT(db)	ROWS	FLOW	UNIT WEIGHT	REMARKS
TB-1	RECEPTIONIST	103	TITUS	DESV	6"	425 CFM	130 CFM	9705 Btu/h	225 CFM	55.0 °F	95.0 °F	2	0.7 GPM	43 lb	ALL
TB-2	COURT ADMIN	126	TITUS	DESV	6"	400 CFM	120 CFM	9058 Btu/h	210 CFM	55.0 °F	95.0 °F	2	0.7 GPM	43 lb	ALL
TB-3	COURT "A"	118	TITUS	DESV	5"	350 CFM	105 CFM	7764 Btu/h	180 CFM	55.0 °F	95.0 °F	1	0.6 GPM	37 lb	ALL
TB-4	JUVENILE COORD.	144	TITUS	DESV	5"	350 CFM	105 CFM	7764 Btu/h	180 CFM	55.0 °F	95.0 °F	1	0.6 GPM	37 lb	ALL
TB-5	ADMIN TECH 4	143	TITUS	DESV	6"	360 CFM	110 CFM	7980 Btu/h	185 CFM	55.0 °F	95.0 °F	1	0.6 GPM	37 lb	ALL
TB-6	WOMEN RESTROOM	142	TITUS	DESV	4"	140 CFM	45 CFM	4313 Btu/h	100 CFM	55.0 °F	95.0 °F	1	0.5 GPM	37 lb	ALL
TB-7	CORRIDOR	125	TITUS	DESV	5"	200 CFM	60 CFM	6470 Btu/h	150 CFM	55.0 °F	95.0 °F	1	0.5 GPM	37 lb	ALL
TB-8	ADMIN JUDGE	133	TITUS	DESV	6"	425 CFM	130 CFM	8627 Btu/h	200 CFM	55.0 °F	95.0 °F	2	0.7 GPM	43 lb	ALL
TB-9	ADMIN JUDGE	133	TITUS	DESV	5"	300 CFM	90 CFM	6902 Btu/h	160 CFM	55.0 °F	95.0 °F	1	0.5 GPM	37 lb	ALL
TB-10	ADMIN. IV	129	TITUS	DESV	5"	350 CFM	105 CFM	7764 Btu/h	180 CFM	55.0 °F	95.0 °F	1	0.6 GPM	37 lb	ALL
TB-11	PROBATION OFFICER	128	TITUS	DESV	6"	380 CFM	115 CFM	8627 Btu/h	200 CFM	55.0 °F	95.0 °F	1	0.7 GPM	37 lb	ALL
TB-12	CORRIDOR	125	TITUS	DESV	4"	200 CFM	60 CFM	8627 Btu/h	200 CFM	55.0 °F	95.0 °F	2	0.7 GPM	43 lb	ALL
TB-13	COURT "A"	118	TITUS	DESV	6"	450 CFM	135 CFM	10784 Btu/h	250 CFM	55.0 °F	95.0 °F	2	0.8 GPM	43 lb	ALL
TB-14	WORKROOM	150	TITUS	DESV	5"	300 CFM	90 CFM	6902 Btu/h	160 CFM	55.0 °F	95.0 °F	1	0.5 GPM	37 lb	ALL
TB-15	SUPERVISOR	152	TITUS	DESV	5"	325 CFM	100 CFM	6902 Btu/h	160 CFM	55.0 °F	95.0 °F	1	0.5 GPM	37 lb	ALL
TB-16	COURT "A"	118	TITUS	DESV	5"	325 CFM	100 CFM	6902 Btu/h	160 CFM	55.0 °F	95.0 °F	1	0.5 GPM	37 lb	ALL
TB-17	CONFERENCE	130	TITUS	DESV	6"	450 CFM	135 CFM	10352 Btu/h	240 CFM	55.0 °F	95.0 °F	2	0.8 GPM	43 lb	ALL
TB-18	LOBBY/ WAITING	101	TITUS	DESV	9"	800 CFM	240 CFM	18117 Btu/h	420 CFM	55.0 °F	95.0 °F	2	1.3 GPM	55 lb	ALL
TB-19	RECEPTIONIST	103	TITUS	DESV	9"	700 CFM	210 CFM	15529 Btu/h	360 CFM	55.0 °F	95.0 °F	1	1.1 GPM	46 lb	ALL
TB-20	JURY POOL	108	TITUS	DESV	7"	600 CFM	180 CFM	15097 Btu/h	350 CFM	55.0 °F	95.0 °F	2	1.1 GPM	46 lb	ALL
TB-21	BREAK	137	TITUS	DESV	4"	225 CFM	70 CFM	4961 Btu/h	115 CFM	55.0 °F	95.0 °F	1	0.5 GPM	37 lb	ALL
TB-22	JURY POOL	108	TITUS	DESV	7"	600 CFM	180 CFM	14019 Btu/h	325 CFM	55.0 °F	95.0 °F	2	1.0 GPM	46 lb	ALL
TB-23	COURT "A"	118	TITUS	DESV	7"	500 CFM	150 CFM	10784 Btu/h	250 CFM	55.0 °F	95.0 °F	1	0.8 GPM	39 lb	ALL
TB-24	LOBBY/ WAITING	101	TITUS	DESV	4"	200 CFM	60 CFM	4313 Btu/h	100 CFM	55.0 °F	95.0 °F	1	0.5 GPM	37 lb	ALL
TB-25	MENTAL HEALTH COORD.	135	TITUS	DESV	4"	200 CFM	60 CFM	4313 Btu/h	100 CFM	55.0 °F	95.0 °F	1	0.5 GPM	37 lb	ALL
TB-26	JURY POOL	108	TITUS	DESV	5"	300 CFM	90 CFM	6470 Btu/h	150 CFM	55.0 °F	95.0 °F	1	0.5 GPM	37 lb	ALL
TB-27	COURT "A"	118	TITUS	DESV	9"	900 CFM	270 CFM	19842 Btu/h	460 CFM	55.0 °F	95.0 °F	2	1.5 GPM	55 lb	ALL
TB-28	JURY POOL	108	TITUS	DESV	7"	600 CFM	180 CFM	13372 Btu/h	310 CFM	55.0 °F	95.0 °F	2	1.0 GPM	46 lb	ALL
TB-29	COURT "B"	140B	TITUS	DESV	9"	920 CFM	280 CFM	21567 Btu/h	500 CFM	55.0 °F	95.0 °F	2	1.6 GPM	55 lb	ALL
TB-30	BAILIFF/ COURT REPORTER	132	TITUS	DESV	6"	370 CFM	115 CFM	8196 Btu/h	190 CFM	55.0 °F	95.0 °F	1	0.6 GPM	37 lb	ALL
TB-31	PAY STATION	105	TITUS	DESV	6"	360 CFM	110 CFM	8196 Btu/h	190 CFM	55.0 °F	95.0 °F	1	0.6 GPM	37 lb	ALL
TB-32	JURY POOL	108	TITUS	DESV	7"	600 CFM	180 CFM	13803 Btu/h	320 CFM	55.0 °F	95.0 °F	2	1.0 GPM	46 lb	ALL
TB-33	OFFICERS/ WARRANTS	146	TITUS	DESV	9"	800 CFM	240 CFM	18117 Btu/h	420 CFM	55.0 °F	95.0 °F	2	1.3 GPM	55 lb	ALL
TB-34	PROSECUTOR	110	TITUS	DESV	5"	300 CFM	90 CFM	6470 Btu/h	150 CFM	55.0 °F	95.0 °F	1	0.5 GPM	37 lb	ALL
TB-35	COURT "A"	118	TITUS	DESV	6"	420 CFM	130 CFM	9058 Btu/h	210 CFM	55.0 °F	95.0 °F	2	0.7 GPM	43 lb	ALL
TB-36	CORRIDOR	125	TITUS	DESV	4"	200 CFM	60 CFM	4313 Btu/h	100 CFM	55.0 °F	95.0 °F	1	0.5 GPM	37 lb	ALL
TB-37	COURT "A"	118	TITUS	DESV	7"	550 CFM	165 CFM	12509 Btu/h	290 CFM	55.0 °F	95.0 °F	2	0.9 GPM	46 lb	ALL
TB-38	COURT "A"	118	TITUS	DESV	6"	400 CFM	120 CFM	9058 Btu/h	210 CFM	55.0 °F	95.0 °F	2	0.7 GPM	43 lb	ALL
TB-39	LOBBY/ WAITING	101	TITUS	DESV	4"	200 CFM	60 CFM	8627 Btu/h	200 CFM	55.0 °F	95.0 °F	2	0.7 GPM	43 lb	ALL
TB-40	COURT "A"	118	TITUS	DESV	6"	450 CFM	135 CFM	10352 Btu/h	240 CFM	55.0 °F	95.0 °F	2	0.8 GPM	43 lb	ALL
TB-41	SCREENING	107	TITUS	DESV	6"	425 CFM	130 CFM	9490 Btu/h	220 CFM	55.0 °F	95.0 °F	2	0.7 GPM	43 lb	ALL
TB-42	COURT "A"	118	TITUS	DESV	6"	450 CFM	135 CFM	10352 Btu/h	240 CFM	55.0 °F	95.0 °F	2	0.8 GPM	43 lb	ALL
TB-43	PROSECUTOR	109	TITUS	DESV	6"	450 CFM	135 CFM	10352 Btu/h	240 CFM	55.0 °F	95.0 °F	2	0.8 GPM	43 lb	ALL
TB-44	COURT "A"	118	TITUS	DESV	7"	550 CFM	165 CFM	12078 Btu/h	280 CFM	55.0 °F	95.0 °F	2	0.9 GPM	46 lb	ALL
TB-45	PROSECUTOR	110	TITUS	DESV	6"	400 CFM	120 CFM	10784 Btu/h	250 CFM	55.0 °F	95.0 °F	2	0.8 GPM	43 lb	ALL
TB-46	COURT "A"	118	TITUS	DESV	6"	450 CFM	135 CFM	9921 Btu/h	230 CFM	55.0 °F	95.0 °F	2	0.8 GPM	43 lb	ALL
TB-47	MEDITION COORD.	134	TITUS	DESV	6"	425 CFM	130 CFM	9490 Btu/h	220 CFM	55.0 °F	95.0 °F	2	0.7 GPM	43 lb	ALL
TB-48	EXIT LOBBY	106	TITUS	DESV	7"	500 CFM	150 CFM	11215 Btu/h	260 CFM	55.0 °F	95.0 °F	1	0.8 GPM	39 lb	ALL
TB-49	COURT "A"	118	TITUS	DESV	4"	200 CFM	60 CFM	8627 Btu/h	200 CFM	55.0 °F	95.0 °F	2	0.7 GPM	43 lb	ALL
TB-50	JURY	120	TITUS	DESV	9"	700 CFM	210 CFM	15529 Btu/h	360 CFM	55.0 °F	95.0 °F	1	1.1 GPM	46 lb	ALL

NOTES:
1. CONTRACTOR IS TO FIELD VERIFY EQUIPMENT IS OPERATIONAL AND REPLACE ANY DAMAGED OR NONOPERATIONAL UNITS OR COMPONENTS SUCH AS DOOR HINGE OR MOTORIZED DAMPER. CLEAN COILS, DAMPER, AND INTERIOR OF EQUIPMENT AND REPLACE ANY FALLING OR TORN INSULATION.
2. NO VAV TERMINAL BOXES SHALL BE LOCATED DIRECTLY ABOVE LIGHT FIXTURES.
3. ALL VAV TERMINAL BOXES TO REMAIN.
4. TRANSFORMER AND LOW VOLTAGE WIRING BY MECHANICAL CONTRACTOR
5. DISCONNECT, UNMOUNT, AND PRESERVE EXISTING VAV TERMINAL BOX UNIT FOR RE-USE. PRESERVE HW VALVE, ACTUATOR, CONTROLS AND ALL OTHER APPURTENANCES FOR RE-USE. DEMOLISH EXISTING HW SUPPLY/RETURN LOOP TO TERMINAL BOX BACK TO MAINS AND CAP. RELOCATE TO AND MOUNT IN NEW LOCATION SHOWN ON PLANS. EXTEND AND CONNECT NEW 3/4" HOT WATER SUPPLY AND RETURN PIPING FROM NEAREST HOT WATER MAINS.
6. EXISTING VAV TERMINAL BOX UNIT TO REMAIN IN PLACE. TERMINAL BOX MAY REQUIRE SLIGHT ADJUSTMENT IN ORIENTATION TO ACHIEVE DESIRED AIRFLOW DIRECTION OR TO MAINTAIN WORKING CLEARANCES. DEMOLISH ASSOCIATED DUCTS CONNECTED TO TERMINAL BOX AND REPLACE PER HVAC PLAN.

GRILLES, REGISTERS AND DIFFUSERS SCHEDULE

				FACE	NECK			INSTALLATION	
ID	DESCRIPTION	MANUFACTURER	MODEL	SIZE	SIZE	WIDTH	HEIGHT	BORDER TYPE	NOTES
CD1	PLAQUE FACE DIFFUSER	TITUS	OMNI	24x24	6"			TYPE 3 (LAY-IN)	ALL
CD1	PLAQUE FACE DIFFUSER	TITUS	OMNI	24x24	8"			TYPE 3 (LAY-IN)	ALL
CD1	PLAQUE FACE DIFFUSER	TITUS	OMNI	24x24	10"			TYPE 3 (LAY-IN)	ALL
CD1	PLAQUE FACE DIFFUSER	TITUS	OMNI	24x24	12"			TYPE 3 (LAY-IN)	ALL
RG1	LOUVERED GRILLE	TITUS	350RL			6"	6"	TYPE 3 (LAY-IN)	ALL
RG1	LOUVERED GRILLE	TITUS	350RL			8"	8"	TYPE 3 (LAY-IN)	ALL
RG1	LOUVERED GRILLE	TITUS	350RL			10"	8"	TYPE 3 (LAY-IN)	ALL
RG1	LOUVERED GRILLE	TITUS	350RL	24x12		6"	6"	TYPE 3 (LAY-IN)	ALL
RG1	LOUVERED GRILLE	TITUS	350RL	24x12		10"	10"	TYPE 3 (LAY-IN)	ALL
RG1	LOUVERED GRILLE	TITUS	350RL	24x24		10"	10"	TYPE 3 (LAY-IN)	ALL
RG1	LOUVERED GRILLE	TITUS	350RL	24x24		22"	22"	TYPE 3 (LAY-IN)	ALL

NOTES:
1. AIR DEVICES SHALL HAVE MANUFACTURER'S STANDARD CONSTRUCTION WITH WHITE FINISH UNLESS OTHERWISE NOTED. COORDINATE MOUNTING FRAME REQUIREMENTS WITH OTHER TRADES PRIOR TO ORDERING ANY DEVICE.
2. PROVIDE WITH LAY-IN FRAMES FOR HARD CEILINGS. COORDINATE WITH ARCHITECTURAL PLANS.
3. PROVIDE WITH OPPOSED BLADE DAMPER INTEGRATED WITH AIR DEVICE IN AREAS WITH INACCESSIBLE CEILINGS. (RETURN AND EXHAUST DEVICES ONLY)
4. PROVIDE SOUND BOOT ON ALL UNDUCTED RETURN GRILLES THROUGHOUT BUILDING. SOUND BOOT SHALL BE BLACK. REFER RETURN AIR SOUND TRAP DETAIL.

(EXISTING) ROOFTOP UNIT SCHEDULE

	LOCATION				OUTSIDE AIR	COOLING COIL	GAS-FIRED HX			
						CAP	GAS BURNER			
ID	NAME	NO.	MANUFACTURER	SUPPLY AIRFLOW	FLOW	TOTAL	CAP	VOLT	PH	REMARKS
AHU-1	ROOF	-	TRANE	3700 CFM	300 CFM	110000 Btu/h	178200 Btu/h	480 V	3	1,2
AHU-2	ROOF	-	TRANE	7600 CFM	1650 CFM	260000 Btu/h	178200 Btu/h	480 V	3	ALL
AHU-3	ROOF	-	TRANE	5600 CFM	600 CFM	130000 Btu/h	178200 Btu/h	480 V	3	1,2
AHU-4	ROOF	-	TRANE	1700 CFM	280 CFM	50000 Btu/h	178200 Btu/h	480 V	3	1,2
AHU-5	ROOF	-	TRANE	2400 CFM	300 CFM	72000 Btu/h	178200 Btu/h	480 V	3	1,2

NOTES:
1. ALL EXISTING AIR HANDLERS ON ROOF TO REMAIN. ALL EXISTING CHILLED AND HOT WATER PIPING LOOPS TO AIR HANDLERS TO REMAIN.
2. ADJUST OUTSIDE AIR INTAKE PER SCHEDULE FOR NEW OCCUPANCY/USE. MECHANICAL CONTROLS CONTRACTOR TO REVISE DESIGN OUTSIDE AIR INTAKE VOLUME.
3. PROVIDE EXISTING AIR HANDLER WITH BIPOLAR IONIZATION KIT, INSTALLED BY MECHANICAL CONTRACTOR.

EXHAUST FAN SCHEDULE

	LOCATION					FAN									INTERLOCK	
						AIRFLOW	PRESS		MOTOR							
ID	NAME	NO.	MANUFACTURER	MODEL NO.	TYPE	DESIGN	ESP	RPM	POWER	UNIT WEIGHT	FLA	MOCP	VOLT	PH	ID	REMARKS
EF-1	HOLDING TOILET	149	GREENHECK	CSP-A200	INLINE	70 CFM	0.50 in-wg	825	0.06 hp	30 lb	0.5 A	15.0 A	115 V	1	LIGHTS	1
EF-2	UNISEX RESTROOM	122	GREENHECK	CSP-A200	INLINE	70 CFM	0.50 in-wg	825	0.06 hp	30 lb	0.5 A	15.0 A	115 V	1	LIGHTS	1
EF-3	PUBLIC RESTROOM	102	GREENHECK	CSP-A200	INLINE	70 CFM	0.50 in-wg	825	0.06 hp	30 lb	0.5 A	15.0 A	115 V	1	LIGHTS	1
EF-4	WOMEN RESTROOM	111	GREENHECK	CSP-A290	INLINE	210 CFM	0.50 in-wg	1050	0.12 hp	30 lb	0.8 A	15.0 A	115 V	1	LIGHTS	1
EF-5	MEN RESTROOM	117	GREENHECK	CSP-A290	INLINE	210 CFM	0.50 in-wg	1050	0.12 hp	30 lb	0.8 A	15.0 A	115 V	1	LIGHTS	1
EF-6	ROOF	-	GREENHECK	G-095-VG	ROOF	260 CFM	0.50 in-wg	1454	0.17 hp	30 lb	2.8 A	15.0 A	115 V	1	LIGHTS	1
EF-7	ROOF	-	GREENHECK	G-097-VG	ROOF	70 CFM	0.25 in-wg	808	0.25 hp	38 lb	3.8 A	15.0 A	115 V	1	TSTAT	ALL

NOTES:
1. PROVIDE INTEGRAL DISCONNECT SWITCH, BACKDRAFT DAMPER, FLEX CONNECTIONS ON INLET/OUTLET, AND VIBRATION ISOLATORS WHERE APPLICABLE.
2. INTERLOCK FAN WITH THERMOSTAT SET FOR 80°F.

GRAVITY VENTILATOR SCHEDULE

	LOCATION				HOOD		DIMENSIONS		
					AIRFLOW		THROAT		
ID	NAME	NO.	MANUFACTURER	MODEL NO.	MAX	PD	WIDTH	LENGTH	REMARKS
GH-2	ROOF	-	GREENHECK	GRSR	250 CFM	0.10 in-wg	1'- 8 1/2"	1'- 8 1/2"	ALL
GH-3	ROOF	-	GREENHECK	GRSR	250 CFM	0.10 in-wg	1'- 8 1/2"	1'- 8 1/2"	ALL
GH-4	ROOF	-	GREENHECK	GRSR	250 CFM	0.10 in-wg	1'- 8 1/2"	1'- 8 1/2"	ALL
GH-5	ROOF	-	GREENHECK	GRSR	250 CFM	0.10 in-wg	1'- 8 1/2"	1'- 8 1/2"	ALL
GH-6	ROOF	-	GREENHECK	GRSR	250 CFM	0.10 in-wg	1'- 8 1/2"	1'- 8 1/2"	ALL

NOTES:
1. PROVIDE WITH ROOF CURB TO MATCH ROOF SLOPE.
2. PROVIDE WITH GRAVITY BACKDRAFT DAMPER.
3. PROVIDE WITH ALUMINUM BIRDSCREEN.
4. PROVIDE WITH ANTI-CONDENSATE COATING.
5. HOOD SHALL BE ALUMINUM CONSTRUCTION

WALL MOUNTED AIR CONDITIONER SCHEDULE

	LOCATION				FAN	COOLING COIL				INTERLOCK	
ID	NAME	NO.	MANUFACTURER	MODEL NO.	DESIGN AIRFLOW	NOMINAL CAP	UNIT WEIGHT	VOLT	PH	ID	REMARKS
MS-1	IT	139	LG Electronics	LSN120HSV5	450 CFM	1.0 ton	18 lb	208 V	1	MCU-1	ALL

NOTES:
1. PROVIDE WITH INTEGRAL CONDENSATE PUMP AND PROGRAMMABLE THERMOSTAT. REFER TO WASTE & VENT PLAN TO DRAIN TO CONDENSATE RECEPTACLE.

SPLIT SYSTEM CONDENSING UNIT SCHEDULE

	LOCATION					COMPRESSOR		UNIT					INTERLOCK	
ID	NAME	NO.	MANUFACTURER	MODEL NO.	DESCRIPTION	CAP	SEER	WEIGHT	MCA	MOCP	VOLT	PH	ID	REMARKS
MCU-1	ROOF	-	LG Electronics	LSU120HSV5	CONDENSING UNIT	1.0 ton	22.7	74 lb	10.0 A	15.0 A	208 V	1	MS-1	ALL

NOTES:
1. PROVIDE MANUFACTURER INSTALLED LOW AMBIENT KIT, WINTER START CONTROL, AND CRANKCASE HEATER.
2. PROVIDE MANUFACTURER RECOMMENDED WIND BAFFLES AND HAIL GUARD.

ELECTRIC UNIT HEATER SCHEDULE

	LOCATION				AIRFLOW	HEATING ELEMENT				
ID	NAME	NO.	MANUFACTURER	MODEL NO.	DESIGN	POWER	FLA	VOLT	PH	REMARKS
EUH-1	FIRE SPRINKLER	123	REZNOR	EGW	300 CFM	2 kW	12.5 A	240 V	1	ALL

NOTES:
1. PROVIDE INTERNAL SINGLE STAGE THERMOSTAT WITH 55°F SET-POINT AND INTEGRAL DISCONNECT SWITCH.
2. INSTALL WITH MANUFACTURER RECOMMENDED HANGING BRACKET.

MECHANICAL CONTRACTOR IS RESPONSIBLE FOR ANY SHUTDOWN AND STARTUP THAT IS NECESSARY FOR THIS SCOPE OF WORK. CLEAN AND RESTORE EXISTING BOILER, CHILLER, ROOFTOP AHUs, VAVs, PUMPS, AND POT FEEDER TO GOOD WORKING ORDER FOR REUSE IN SCOPE OF WORK. REPLACE FILTERS FOR EXISTING AHUs. DEMOLISH AND PROVIDE NEW DUCTWORK, AIR DEVICES, AND REMOTE TEMPERATURE SENSORS UNLESS NOTED OTHERWISE AND RESTORE ANY THAT ARE EXISTING TO REMAIN. DISCONNECT AND SALVAGE RELOCATED VAVs FOR REUSE IN SCOPE OF WORK.

MECHANICAL CONTRACTOR IS TO MEASURE EXISTING GLYCOL CONCENTRATION AND COORDINATE MEANS AND METHODS OF DRAINING THE SYSTEM TO REROUTE HYDRONIC PIPING SYSTEMS. ADD GLYCOL/WATER MIXTURE TO MATCH EXISTING CONCENTRATION PRIOR TO STARTUP.

GENERAL NOTE:
DUCT DIMENSIONS LISTED ON DRAWINGS REPRESENT THE AIRFLOW FREE AREAS AND DO NOT HAVE ALLOWANCES FOR INSULATION LINER, WHERE APPLICABLE, INSIDE THE DUCTS, OR DUAL WALL DIMENSIONS. DUCTS SHALL BE CONSTRUCTED TO INCLUDE INSULATION REQUIREMENTS AND MAINTAIN AIRFLOW DIMENSIONS INDICATED ON PLANS.

NOTE: NO LINED DUCT IN KITCHEN

MECHANICAL DUCTWORK & INSULATION SCHEDULE

SERVICE	DUCT TYPE	INSULATION TYPE	INSULATION THICKNESS
ALL LOW PRESSURE CONSTANT VOLUME SUPPLY AIR DUCT FROM AIR HANDLER OR PACKAGED UNIT	ROUND OR RECTANGULAR, AS INDICATED ON PLANS.	FIBERGLASS WRAP	2" WRAP, R VALUE=6.0
ALL LOW PRESSURE RETURN AIR DUCT FROM AIR HANDLER OR PACKAGED UNIT	ROUND OR RECTANGULAR, AS INDICATED ON PLANS.	FIBERGLASS WRAP	2" WRAP, R VALUE=6.0
ALL RUNOUTS TO SUPPLY DIFFUSERS AND RETURN GRILLES CONCEALED ABOVE CEILINGS	ROUND OR RECTANGULAR, AS INDICATED ON PLANS.	FIBERGLASS WRAP	2" WRAP, R VALUE=6.0
ALL SUPPLY AIR DIFFUSERS (BACKSIDE, NOT EXPOSED TO SPACE)	N/A	FIBERGLASS WRAP	2" WRAP, R VALUE=6.0
FRESH AIR EXHAUST DUCT	ROUND OR RECTANGULAR, AS INDICATED ON PLANS.	FIBERGLASS WRAP OR MATTE FACED FIBERGLASS LINER, AS INDICATED ON PLANS. N/A IF IN UNCONDITIONED SPACE	2" WRAP OR 1-1/2" LINER, R VALUE=6.0
FRESH AIR SUPPLY DUCT	ROUND OR RECTANGULAR, AS INDICATED ON PLANS.	FIBERGLASS WRAP OR MATTE FACED FIBERGLASS LINER, AS INDICATED ON PLANS. N/A IF IN UNCONDITIONED SPACE	2" WRAP OR 1-1/2" LINER, R VALUE=6.0
RESTROOM EXHAUST DUCT	ROUND OR RECTANGULAR, AS INDICATED ON PLANS.	FIBERGLASS WRAP OR MATTE FACED FIBERGLASS LINER, AS INDICATED ON PLANS	2" WRAP OR 1-1/2" LINER, R VALUE=6.0

MECHANICAL PIPING & INSULATION SCHEDULE

NOTE: ALL EXTERIOR INSULATED PIPING TO BE PROVIDED WITH ALUMINUM JACKET.			INSULATION THICKNESS NOMINAL PIPE SIZE				
SERVICE	PIPING TYPE	INSULATION TYPE	<1	1 TO <1-1/2	1-1/2 TO <4	4 TO <8	≥8
EQUIPMENT DRAINS, COOLING CONDENSATE LINES, AND OVERFLOWS	TYPE "L" HARD COPPER	ELASTOMERIC	0.5	0.5	1.0	1.0	1.0
REFRIGERANT PIPING	COPPER REFRIGERANT PIPING	ELASTOMERIC	0.5	1.0	1.0	1.0	1.5
ALL OUTDOOR INSULATED PIPING	PROVIDE WITH EMBOSSED ALUMINUM JACKET OVER SCHEDULED INSULATION	PER SCHEDULE					

THE MCKINNEY PARTNERSHIP
architects
3600 West Main
Suite 200
Norman, Oklahoma
73072
405.360.1400 p
405.364.8287 f
tmparch.com

Copyright © 2022 The McKinney Partnership Architects, P.C., All Rights Reserved

Seal:

PROFESSIONAL ENGINEER
Nic Millard
23394
OKLAHOMA
11/18/22

Project:

City of Norman
Municipal Complex Renovation
Municipal Court
321 N. Webster Avenue
Norman, OK

Issue Date:
11/18/22 ISSUED FOR BIDDING

Revisions:

Project Number:
CM083319 (201253R)

Sheet Title:
MECHANICAL SCHEDULES

Sheet Number:
M6.1

CO#: 5338 Expires 06/30/2023
520 West Broadway Avenue Suite 101
Broken Arrow, Oklahoma 74012

918.895.6510 p
hpengineeringinc.com/
HP ENGINEERING

Autodesk Docs://201188K Norman Courthouse/221188K CoN County Courthouse.rvt
11/18/2022 5:35:22 PM

ELECTRICAL LEGEND

ABBREVIATIONS

AC	ABOVE COUNTER	IG	ISOLATED GROUND
AFF	ABOVE FINISHED FLOOR	LV	HARDWIRED AUTOMATIC VALVE
AV	AUDIO VISUAL	MCC	MOTOR CONTROL CENTER
CB	CIRCUIT BREAKER	NEC	NATIONAL ELECTRICAL CODE
E	EXISTING		
EC	ELECTRICAL CONTRACTOR	NEMA	NATIONAL ELECTRICAL MANUFACTURERS ASSOC.
EP	EXPLOSION PROOF		
GFI	GROUND FAULT CIRCUIT INTERRUPTER	NIC	NOT IN CONTRACT
		NL	NIGHT LIGHT
		UG	UNDERGROUND
		UON	UNLESS OTHERWISE NOTED
GR	GROUND	WP	WEATHERPROOF
HP	HORSE POWER	WR	WEATHER RESISTANT

WIRING

WIRING CONCEALED IN CEILING OR WALLS UON. ALL WIRE IS NUMBER #12 AWG MINIMUM.

EXPOSED RACEWAY.

UNDERGROUND RACEWAY; TYPE, SIZE, CONDUCTORS, AND ARRANGEMENT BY NOTATION OR SCHEDULE.

LOW-VOLTAGE WIRING

SWITCHES

$* SWITCH MOUNTED AT +48"; SINGLE POLE UON. LOWER CASE LETTER, WHEN PRESENT, INDICATES FIXTURES CONTROLLED.

* ABBREVIATIONS FOR SWITCH:

- 2 DOUBLE POLE SWITCH
- 3 3-WAY SWITCH
- 4 4-WAY SWITCH
- D DIMMER SWITCH (SHALL BE COMPATIBLE WITH FIXTURE BEING DIMMED)
- F FAN SWITCH: DUAL OPERATION WITH DIMMER
- K KEYED SWITCH
- M MOTOR RATED SWITCH
- OS DUAL TECHNOLOGY OCCUPANCY SENSOR
- T TIMER SWITCH
- P PUSH BUTTON. COORDINATE LOCATION OF BUTTON PER MANUFACTURER'S SPECIFICATIONS.

OS DUAL TECH LOW-VOLTAGE OCCUPANCY SENSOR W/ POWER PACK

RECEPTACLES

DUPLEX RECEPTACLE (NEMA 5-20R)

DUPLEX RECEPTACLE (NEMA 5-20R); MOUNTED 6" ABOVE COUNTERTOP.

H HORIZONTAL DUPLEX RECEPTACLE (NEMA 5-20R); MOUNTED 18" AFF.

U (ALL RECEPTACLE TYPES) WITH USB CHARGING PORTS

GFI DUPLEX RECEPTACLE (NEMA 5-20R)

WP GFI,WR DUPLEX RECEPTACLE WITH WP ENLOSURE (NEMA 5-20R)

GFI DUPLEX RECEPTACLE (NEMA 5-20R); MOUNTED 6" ABOVE COUNTERTOP.

QUADRUPLEX RECEPTACLE (TWO NEMA 5-20R)

SPECIAL RECEPTACLE: VERIFY NEMA TYPE WITH MANUFACTURER

SPECIAL RECEPTACLE CEILING MOUNTED: VERIFY NEMA TYPE WITH MANUFACTURER

FLOOR BOX WITH DATA REFER TO TECHNOLOGY DRAWINGS: LEGRAND SERIES RFB2E-OG-6CT2AA, EFB45S-OG-EFB45BTAL, AND EFB6S-OG-EFB610BTBK.

AV AUDIO VISUAL / HMDI

CEILING MOUNTED RECEPTACLE (NEMA 5-20R)

PANELS AND MISC

LIGHT OR POWER PANEL

J 4X4 JUNCTION BOX.

EQUIPMENT DISCONNECT: INTERIOR DISCONNECTS SHALL BE NEMA 1 TYPE. EXTERIOR DISCONNECTS SHALL BE NEMA 3R TYPE. SIZE AS INDICATED IN THE PLANS AND PER NAMEPLATE RATING.

EQUIPMENT COMBINATION MOTOR STARTER: INTERIOR COMBINATION MOTOR STARTER SHALL BE NEMA 1 TYPE. EXTERIOR COMBINATION MOTOR STARTER SHALL BE NEMA 3R TYPE. SIZE AS INDICATED IN THE PLANS AND PER NAMEPLATE RATING.

ELECTRICAL NOTES

1. DRAWINGS ARE DIAGRAMMATIC ONLY AND REPRESENT THE GENERAL SCOPE OF THE WORK. REVIEW ALL GENERAL NOTES, SPECIFICATIONS AND PLANS FOR ADDITIONAL REQUIREMENTS THAT MAY NOT BE SPECIFICALLY CALLED OUT IN THIS PORTION OF THE CONSTRUCTION DOCUMENTS.
2. SPECIAL ATTENTION SHALL BE GIVEN TO ALL RACEWAYS WITHIN FINISHED AREAS WITHOUT CEILINGS AND EXPOSED TO STRUCTURE. IN GENERAL, ALL RACEWAYS SHALL BE CONCEALED WITHIN WALLS, ABOVE STRUCTURE FINISH, OR BELOW FLOOR SLABS WHEN SPECIFIED. WHERE EXPOSED CONDITIONS ARE NECESSARY OR UNAVOIDABLE DUE TO OTHER CONDITIONS, THE BID SHALL INCLUDE ANY REASONABLE MEANS TO MINIMIZE THE AMOUNT OF SURFACE MOUNTED EQUIPMENT. PRIOR TO ROUGH-IN, COORDINATE ALL EXPOSED RACEWAY AND BOX CONDITIONS WITH ARCHITECT PRIOR TO CONSTRUCTION OF WALLS, ROOF DECK, OR FLOOR SLABS. ATTACHMENT TO ROOF DECK OR JOIST WEBBINGS IS NOT ALLOWED, MAINTAIN A MINIMUM SPACING OF 1-1/2" FROM CONDUIT TO ROOF DECK. IN AREAS WHERE EXPOSED RACEWAYS ARE REQUIRED, INSTALL SYSTEMS SQUARE AND TIGHT TO STRUCTURE AND PAINT TO MATCH THE STRUCTURE PER ARCHITECT AND/OR OWNER SPECIFICATIONS. FAILURE TO PROPERLY COORDINATE THE ROUTING OF EXPOSED RACEWAYS MAY RESULT IN RELOCATION OF SUCH RACEWAYS AT NO ADDITIONAL COST TO THE OWNER.
3. OPENINGS AROUND ELECTRICAL PENETRATIONS THROUGH FIRE-RESISTANT-RATED WALLS, PARTITIONS, FLOORS OR CEILINGS SHALL BE FIRESTOPPED USING APPROVED METHODS TO MAINTAIN THE FIRE RESISTANCE RATING. PROVIDE PENETRATION FIRE STOPPING WITH RATINGS DETERMINED PER ASTM E 814 OR UL 1479. FIRE STOPPING SHALL NOT BE LESS THAN FIRE RESISTANCE RATING OF CONSTRUCTED PENETRATIONS.
4. FIELD MOUNTED DEVICES SUCH AS SWITCHES, MOTOR STARTERS, RECEPTACLES, ETC., ARE SHOWN IN THEIR APPROXIMATE LOCATION. SWITCH MOUNTING HEIGHT SHALL BE 48" ABOVE FINISHED FLOOR AND RECEPTACLE MOUNTING HEIGHT SHALL BE 18" ABOVE FINISHED FLOOR UON. REFER TO THE TYPICAL MOUNTING HEIGHT DETAIL.
5. INSTALL EQUIPMENT IN A MANNER TO REMAIN ACCESSIBLE WITH REASONABLE MEANS BY THE OWNER FOLLOWING COMPLETION OF WORK. SPECIAL ATTENTION AND ADDITIONAL COORDINATION IS EXPECTED IN AREAS OF THE BUILDING WHERE THE CEILING AND STRUCTURE HEIGHTS HAVE SIGNIFICANT DIFFERENT ELEVATIONS. EQUIPMENT REQUIRING POSSIBLE FUTURE ACCESS SHALL BE INSTALLED SUCH THAT IT MAY BE SAFELY ACCESSED FROM A STANDARD STEP LADDER OR PERSONNEL LIFT SUITABLE FOR THE LOCATION AND CEILING HEIGHT, WITHOUT REMOVING OR DAMAGING THE CEILING GRID STRUCTURE.
6. ALL WIRING DEVICE COVERPLATES SHALL INDICATE PANELBOARD AND CIRCUIT SERVING THE DEVICE. UTILIZE CLEAR VINYL (BLACK AND WHITE LETTERING CONTRASTING THE WHITE AND BROWN COVER PLATE) IDENTIFICATION LABELS MANUFACTURED BY 3M COMPANY (OR APPROVED EQUIVALENT).
7. JUNCTION BOXES LOCATED ABOVE GRID CEILINGS SHALL BE LOCATED NO GREATER THAN 4-FEET ABOVE THE CEILING IN A LOCATION ACCESSIBLE VIA A LADDER FROM THE ROOM BELOW.
8. ROOM NAMES/NUMBERS SHOWN IN PANELBOARD SCHEDULES ARE PER ARCHITECTURAL FLOOR PLANS. CONTRACTOR SHALL PROVIDE FINALIZED PANELBOARD SCHEDULES AT COMPLETION OF PROJECT WITH OWNER PROVIDED ROOM NAMES/NUMBERS.
9. PROVIDE A MINIMUM OF (3) SPARE 1" CONDUITS FROM RECESSED PANELBOARD, UP TO ACCESSIBLE CEILING SPACE.
10. ALL WORK IS TO BE PERFORMED IN STRICT COMPLIANCE WITH THE NATIONAL ELECTRICAL CODE, STATE LAWS, AND ALL OTHER REGULATIONS GOVERNING WORK OF THIS NATURE.
11. THE CONTRACTOR IS RESPONSIBLE FOR ALL WORK, MATERIAL, AND LABOR TO SATISFY A COMPLETE AND WORKING SYSTEM WHETHER SPECIFIED OR IMPLIED.
12. CONTRACTOR TO CONFIRM EXACT LOCATION OF EXISTING AND NEW EQUIPMENT.
13. THE CONTRACTOR SHALL FURNISH AND INSTALL ALL GROUNDING SYSTEMS (AS REQUIRED) IN ACCORDANCE WITH THE NATIONAL ELECTRIC CODE.
14. ALL ELECTRIC MATERIALS AND EQUIPMENT FOR THE PROJECT SHALL BE NEW AND U.L. OR EQUALLY LISTED.
15. SUBMIT TO THE OWNER CERTIFICATES OF INSPECTIONS IN DUPLICATE FROM AN APPROVED INSPECTION AGENCY UPON COMPLETION.
16. THE CONTRACTOR SHALL SECURE ALL PERMITS OR APPLICATIONS AND PAY ANY AND ALL FEES AS REQUIRED.
17. THE CONTRACTOR SHALL FURNISH ALL INSTRUMENTS AND QUALIFIED PERSONNEL OR FIRM TO PERFORM ALL REQUIRED TESTS.
18. NO EQUIPMENT SHALL BE ENERGIZED UNTIL ALL TEST AND ADJUSTMENTS HAVE BEEN MADE. THREE COPIES OF ALL TEST RESULTS SHALL BE DELIVERED TO THE OWNER
19. ALL ELECTRICAL WORK SHALL BE COORDINATED WITH THE MECHANICAL WORK AS CALLED FOR IN MECHANICAL SPECIFICATIONS AND PLANS.
20. COORDINATE ALL CEILING MOUNTED ELECTRICAL ITEMS WITH OTHER DISCIPLINES, WITH CEILING, AND STRUCTURE. REFER TO ARCHITECTURAL REFLECTED CEILING PLAN.
21. FIELD VERIFY LOCATIONS OF EXISTING ELECTRICAL EQUIPMENT, INCLUDING POWER POLES, TELEPHONE PEDESTALS, OVERHEAD AND UNDERGROUND FEEDERS, METERS, PANELS, DEVICES, ETC.
22. PROVIDE FOR COORDINATION WITH EXISTING EQUIPMENT.
23. HOME RUN CIRCUITS MORE THAN 75 FEET FROM THE PANELBOARD SHALL BE MADE WITH #10 AWG OR LARGER AS REQUIRED TO LIMIT VOLTAGE DROP TO 3% MINIMUM.
24. BRANCH CIRCUIT CONDUCTORS SHALL NOT BE SMALLER THAN #12AWG. CONDUCTORS FOR 120V BRANCH CIRCUITS MORE THAN 100 FT SHALL NOT BE SMALLER THAN #10AWG AND MORE THAN 200 FT SHALL NOT BE SMALLER THAN #8AWG.

UNDERGROUND UTILITIES/FEEDERS/BRANCH CIRCUITS/ETC. SHALL NOT BE ROUTED THROUGH OR WITHIN 25 FEET OF ANY AREAS DEDICATED FOR FUTURE BUILDING ADDITION.

ELECTRICAL NOTES

25. UNLESS NOTED OTHERWISE PROVIDE MINIMUM #8 AWG CONDUCTORS IN 1" CONDUIT(S) FOR ALL UNDERGROUND SITE POWER AND LIGHTING CIRCUITS. INCREASE CONDUCTOR AND RELATED CONDUIT SIZE AS NOTED OR OTHERWISE REQUIRED TO LIMIT VOLTAGE DROP TO LESS THAN 5% FOR THE ENTIRE LENGTH OF SYSTEM.
26. THE TYPE OF CONDUIT SHALL BE AS FOLLOWS FOR ALL FEEDERS AND DISTRIBUTION CIRCUITS, UNLESS OTHERWISE SPECIFIED.

    APPLICATION - TYPE OF CONDUIT

    BURIED IN CONCRETE OR OUTDOORS - PVC WITH RIGID GALVANIZED STEEL ELBOWS

    SERVICE ENTRANCE - GALVANIZED RIGID STEEL OR SERVICE UTILITY SPECIFICATIONS.
27. SEISMIC PROTECTION FOR SEISMIC CONCERNS OF ALL BUILDING SYSTEMS INCLUDING BUT NOT LIMITED TO MECHANICAL, PLUMBING, AND ELECTRICAL MUST MEET MINIMUM REQUIREMENTS OF ALL APPLICABLE CODES FOR BUILDINGS' CLASSIFIED SEISMIC USE GROUP AND SEISMIC DESIGN CATEGORY. ANY REQUIREMENTS FOR SEISMIC PROTECTION MEASURES TO BE APPLIED SHALL BE INSTALLED IN STRICT ACCORDANCE WITH ALL APPLICABLE LOCAL, STATE, AND/OR FEDERAL CODES AND WITH MANUFACTURER'S REQUIREMENTS, THE MOST STRINGENT SHALL APPLY.
28. THE CONTRACTOR SHALL BE RESPONSIBLE FOR DETERMINING THE TYPE AND LOCATION OF SEISMIC RESTRAINTS REQUIRED FOR THE VARIOUS SYSTEM'S ELEMENTS CONTAINED IN THE CONSTRUCTION DOCUMENTS BASED ON THE RELATED SEISMIC CODE CRITERIA, THE SIZE AND WEIGHT OF THE SUPPORTED ELEMENT AND THE DISTANCE FROM STRUCTURE THAT THE ELEMENT WILL BE INSTALLED. IF REQUIRED BY LOCAL, STATE, FEDERAL CODES AND/OR OTHER AUTHORITY HAVING JURISDICTION (AHJ) THE CONTRACTOR SHALL SUBMIT DESCRIPTIVE CATALOG DATA OF SEISMIC RESTRAINTS, SHOP DRAWINGS SHOWING THE TYPES, LOCATIONS AND INSTALLATION DETAILS OF SEISMIC RESTRAINTS AND CALCULATIONS SHOWING THAT THE SEISMIC RESTRAINTS MEET THE SEISMIC REQUIREMENTS TO THE LOCAL AHJ FOR REVIEW AND APPROVAL. CALCULATIONS SHALL BE SIGNED AND SEALED BY A REGISTERED PROFESSIONAL ENGINEER, LICENSED IN THE STATE OF THE PROJECT LOCATION AND EMPLOYED BY THE MANUFACTURER OF THE SEISMIC RESTRAINT PRODUCTS. CALCULATIONS SHALL INCLUDE DEAD LOADS, STATIC SEISMIC LOADS AND CAPACITY OF MATERIALS UTILIZED FOR CONNECTIONS TO EQUIPMENT AND STRUCTURE.

GENERAL POWER NOTES

1. ALL RECEPTACLES SHALL BE GROUNDING TYPE.
2. ALL RECEPTACLES INSTALLED IN BATHROOMS, OUTDOORS AND KITCHENS SHALL HAVE GROUND-FAULT CIRCUIT INTERRUPTER PROTECTION AS REQUIRED BY THE NATIONAL ELECTRIC CODE.
3. COORDINATE MECHANICAL EQUIPMENT CONNECTION REQUIREMENTS WITH MECHANICAL CONTRACTOR PRIOR TO ROUGH-IN. LOCATE FEEDERS, DISCONNECTS AND MAINTENANCE RECEPTACLES SO THAT THEY WILL NOT INTERFERE WITH OPERATION OR MAINTENANCE OF MECHANICAL EQUIPMENT.
4. PROVIDE POWER TO MECHANICAL, PLUMBING, AND ALL OTHER EQUIPMENT AS REQUIRED FOR PROPER OPERATION. COORDINATE AND VERIFY EACH PIECE OF EQUIPMENTS POWER/CONTROL REQUIRMENTS PRIOR TO ORDERING RELATED ELECTRICAL EQUIPMENT. REFER TO RELATED MECHANICAL, PLUMBING, AND OTHER RELATED DOCUMENTS FOR LOCATIONS OF EQUIPMENT AND REQUIRED CLEARANCES AROUND EQUIPMENT.
5. COORDINATE EXACT MOUNTING HEIGHT OF EACH ABOVE COUNTER RECEPTACLE WITH ARCHITECT AND OWNER PRIOR TO ROUGH-IN.
6. ALL OUTLETS LOCATED IN AREAS REQUIRING GROUND-FAULT CIRCUIT INTERRUPTER PROTECTION PER NEC-210 SHALL CONSIST OF A GFCI PROTECTED DEVICE, EVEN IF NOT SPECIFICALLY INDICATED IN THE DRAWINGS.
7. ALL OUTLETS DEVICES AND COVER PLATE TO BE WHITE U.O.N. AND TO BE BROWN IN WOOD PANELING.

GENERAL LIGHTING NOTES

1. PROVIDE ALL MOUNTING AND SUPPORT HARDWARE FOR LIGHT FIXTURES TO MEET SPECIFIED MOUNTING HEIGHTS, REFER TO ARCHITECTURAL ELEVATIONS FOR EXACT MOUNTING HEIGHTS OF FIXTURES.
2. CONNECT "UN-SWITCHED" HOT CONDUCTOR FROM CIRCUIT SERVING SPACE LIGHTING TO EACH EXIT SIGN, AND EMERGENCY LIGHT FIXTURE SERVING THE SPACE.
3. COORDINATE ALL DEVICES AND WALL-MOUNTED LIGHT FIXTURE LOCATIONS WITH THE ARCHITECTURAL WALL FINISHES AND ELEVATIONS. SPECIAL ATTENTION AND COORDINATION OF WALL TYPES AND FINISHES IS REQUIRED PRIOR TO ROUGH-IN. EXACT LOCATION OF DEVICES SHALL BE COORDINATED WITH THE ARCHITECT PRIOR TO ROUGH-IN TO AVOID INSTALLATION ON SPECIAL ARCHITCTURAL WALL FINISHES. DEVICES NOT PROPERLY COORDINATED WITH THE SPECIAL WALL FINISHES INDICATED IN THE CONSTRUCTION DOCUMENTS PRIOR TO ROUGH-IN SHALL BE RELOCATED AT NO ADDITIONAL COST TO THE OWNER.
4. ELECTRICAL CONTRATOR SHALL VERIFY CHEVRON DIRECTIONS OF ALL EXIT SIGNS PRIOR TO ORDERING.
5. FOR BATTERY FED EMERGENCY LIGHTS: PROVIDE EMERGENCY BALLAST. PROVIDE "HOT" WIRE TO EMERGENCY BALLAST. SWITCH FIXTURE AS INDICATED ON PLANS.
6. COORDINATE AND PROVIDE DIMMER SWITCHES RATED FOR AND COMPATABLE WITH INTENDED LIGHT FIXTURE(S) TO BE CONTROLLED. CIRCUITS CONTROLLED WITH LINE-VOLTAGE DIMMER SWITCHES SHALL NOT SHARE NEUTRAL CONDUCTORS.

GENERAL LOW VOLTAGE NOTES

1. PROVIDE (1) 1/2" CONDUIT, AND 4" SQUARE BOX WITH SINGLE GANG DEVICE RING FOR ALL THERMOSTAT LOCATIONS INDICATED ON THE MECHANICAL DRAWINGS. ROUTE CONDUIT FROM BOX TO ACCESSIBLE CEILING CAVITY. PROVIDE PLASTIC BUSHINGS ON EXPOSED CONDUIT ENDS. PROVIDE PULL STRING IN ALL EMPTY CONDUIT SYSTEMS. COORDINATE EXACT LOCATIONS AND MOUNTING HEIGHTS WITH MECHANICAL CONTRACTOR PRIOR TO ROUGH-IN.

THE MCKINNEY PARTNERSHIP
architects

3600 West Main
Suite 200
Norman, Oklahoma
73072
405.360.1400 p
405.364.8287 f
tmparch.com

Copyright: ©2022 The McKinney Partnership Architects, P.C., All Rights Reserved

Seal:

LICENSED PROFESSIONAL ENGINEER
DAN MCDONOUGH
21299
OKLAHOMA
11/18/22
CA5338(PE)

Project:

City of Norman
Municipal Complex Renovation
Municipal Court
321 N. Webster Avenue
Norman, OK

Issue Date:
11/18/22 ISSUED FOR BIDDING

Revisions:

Project Number:
CM083319 (201253R)

Sheet Title:
ELECTRICAL NOTES AND LEGEND

Sheet Number:
E0.1

CO#: 5338 Expires 06/30/2023
520 West Broadway Avenue Suite 101
Broken Arrow, Oklahoma 74012

918.895.6510 p
hpengineeringinc.com/

HP ENGINEERING

Autodesk Docs://201188K Norman Courthouse/221188K CoN County Courthouse.rvt
11/18/2022 12:48:39 PM

1 / ED1.1 ELECTRICAL DEMO PLAN
1/8" = 1'-0"

GENERAL LEGEND

E.C. TO REMOVE AND DEMOLISH EXISTING ELECTRICAL DEVICES (FIRE ALARM, RECEPTACLES, LIGHTING, SWITCH, DATA OUTLETS, CABLING, ETC.) UNLESS NOTED OTHERWISE ON THE PLAN. REMOVE ALL ASSOCIATED WIRES AND CONDUITS BACK TO PANEL UNLESS OTHERWISE NOTES.

EXISTING TO REMAIN.

DEMO PLAN NOTES

1. EXISTING LIGHT FIXTURES IN THIS AREA TO BE REMOVED AND DEMOLISHED . ALL EXISTING WIRING AND CONDUIT SHALL BE REUSED TO RECONNECT NEW LIGHT FIXTURES IN EXISTING LOCATION . REFER TO SHEET E2.1 FOR FURTHER INFORMATION.
2. E.C. SHALL COORDINATE WITH M.C./OWNER REGARDING SCOPE OF REMOVAL OF MECHANICAL EQUIPMENT PRIOR TO START OF DEMO PHASE.
3. E.C. SHALL CAREFULLY DISCONNECT EXISTING VAV BOXES TO BE RELOCATED OR SHIFTED/ROTATED. PRESERVE LOCAL MEANS OF DISCONNECT FOR REUSE IN NEW LOCATION. CONTRACTOR MAY PRESERVE AND REUSE ANY EXISTING CONDUIT AND WIRING FEEDING THESE VAV BOXES WHERE CONDUIT AND WIRING IS IN GOOD CONDITION AND WHERE PRACTICABLE. BOXES MAY BE CONNECTED ON CIRCUITS DIFFERING FROM ORIGINAL DUE TO RELOCATION WHERE PRACTICAL, BUT NO MORE THAN (5) VAV BOXES SHALL BE CONNECTED ON ONE CIRCUIT. CONTRACTOR SHALL MODIFY EXISTING CONDUIT AND WIRING OR PROVIDE NEW CONDUIT AND WIRING AS REQUIRED FOR A COMPLETE AND OPERATIONAL SYSTEM. SEE ELECTRICAL POWER FOR NEW LOCATIONS.
4. EXISTING LOCATION OF RECEPTACLES IN THIS AREA TO REMAIN. CONTRACTOR SHALL DEMO AND REPLACE RECEPTACLES WITH NEW WP GFCI OUTLET AND RECIRCUIT TO NEW PANEL. CONTRACTOR SHALL PROVIDE BOXES, CONDUIT, CABLING, AND OTHER NECESSARY APPURTENANCES FOR A COMPLETE AND OPERATIONAL SYSTEM.
5. EXISTING PHONE EQUIPMENT TO BE DEMOLISHED.
6. CONTRACTOR SHALL DEMO EXISTING ELECTRICAL EQUIPMENT, AND REPLACE WITH NEW EQUIPMENT AS INDICATED ON ELECTRICAL RISER DIAGRAM ON SHEET E3.1. NEW EQUIPMENT WILL KEEP SAME NAMING CONVENTION.
7. LIGHTING CONTACTOR/TIME CLOCK AND ALL CIRCUITS BEING CONTROLLED TO BE RELOCATED AS NECESSARY. CONTRACTOR TO KEEP SAME LIGHTING CONTROL AS CONNECTED PRIOR TO DEMOLITION.

GENERAL DEMOLITION NOTES

A. PRIOR TO BID SUBMISSION, THE CONTRACTOR SHALL VISIT THE SITE AND AREA OF WORK TO FAMILIARIZE THEMSELVES WITH THE EXISTING CONDITIONS.

B. REMOVE ALL ELECTRICAL DEVICES WITHIN THE SPECIFIED AREAS IN WHICH DEVICE(S) ARE LOCATED IN WALLS BEING REMOVED. ALL DEMOLITION WORK IS NOT DETAILED ON THESE DRAWINGS. REMOVAL AND RELOCATION OF SOME EXISTING ELECTRICAL WORK SHALL BE NEEDED FOR SATISFACTORY PERFORMANCE OF THIS AND OTHER TRADES. PROPOSALS SHALL INCLUDE CONSIDERATION FOR ANY AND ALL REQUIRED CHANGES. THE INTENT OF THIS DRAWING IS TO RELATE THE GENERAL EXTENT OF DEMOLITION REQUIRED AND NOT TO INDICATE ALL DEVICES, REMOVALS, RECONNECTIONS OR ADDITIONAL WORK REQUIRED.

C. CONTRACTOR SHALL BE RESPONSIBLE FOR DISCONNECTING AND DISPOSING OF ALL ELECTRICAL EQUIPMENT, CONDUIT, WIRE, DEVICES, ETC. AS REQUIRED FOR A COMPLETE DEMOLITION. ALL FLUORESCENT LAMPS AND PCB BALLASTS SHALL BE DISPOSED OF IN ACCORDANCE WITH STATE AND FEDERAL REGULATIONS.

D. THE OWNER SHALL RESERVE ALL RIGHTS TO CLAIMING MATERIALS REMOVED DURING DEMOLITION. THE CONTRACTOR SHALL VERIFY WHICH ITEMS AND/OR MATERIALS THE OWNER WISHES TO CLAIM AND TO REMOVE ALL ITEMS AND/OR MATERIALS NOT CLAIMED BY THE OWNER TO A DESIGNATED LOCATION

E. ANY CONCEALED CONDUITS MADE OBSOLETE DUE TO THE DEMOLITION SHALL BE CUT BACK TO FLOOR, WALL OR CEILING WITH THE REMAINING ENDS PLUGGED TO ALLOW REFINISHING OF THE SURFACES. EXISTING CONDUITS THAT ARE IN WALLS OR FLOORS WHICH ARE TO REMAIN AND THE CONDUIT DOES NOT, AND WILL NOT INTERFER WITH THE WORK OF ANY TRADE, MAY REMAIN. ALL ABANDONED WIRE SHALL BE REMOVED IN ITS ENTIRETY.

F.WHILE PERFORMING DEMOLITION WORK, ALL CIRCUITING AND FEEDERS SERVING AREAS BEYOND THE DEMOLITION AREA SHALL BE MAINTAINED AND REPAIRED AS REQUIRED, AT THE CONTRACTOR'S EXPENSE, SO THAT ALL SUCH SYSTEMS REMAIN IN OPERATION. CONTINUITY SHALL REMAIN AT ALL TIMES WHILE DISCONNECTING EQUIPMENT AND DEVICES FROM CIRCUITS THAT ARE TO REMAIN. CONTINUOUS SERVICE FEEDERS, CIRCUITS, PARTIAL CIRCUITS AND OUTLETS EFFECTED BY DEMOLITION WORK SHALL BE MAINTAINED, EXCEPT WHEN WRITTEN PERMISSION IS PROVIDED BY THE OWNER. ALL WORK REQUIRING SHUT-DOWN OF EXISTING SYSTEMS SHALL BE COORDINATED WITH OWNER, AT NO COST TO THE OWNER. CONTRACTOR SHALL PLAN AND PERFORM WORK IN SUCH A WAY AS TO MINIMIZE THE OUTAGES AND SUBMIT TO THE OWNER A SCHEDULE OF THE REQUIRED OUTAGES.

G. THE CONTRACTOR SHALL BE RESPONSIBLE FOR ALL DAMAGE TO EXISTING MATERIALS NOT EFFECTED BY THE SCOPE OF DEMOLITION WORK WHICH IS DAMAGED BY HIS WORK. THE CONTRACTOR SHALL REPAIR OR REPLACE ANY/ALL DAMAGED MATERIALS OR EQUIPMENT AS DIRECTED, AT NO ADDITIONAL COST TO THE OWNER. REPAIRING AND PATCHING SHALL BE DONE BY THE RESPECTIVE TRADES INVOLVED. ELECTRICAL CONTRACTOR SHALL BE RESPONSIBLE FOR REMOVAL AND RESTORATION OF EXISTING CONSTRUCTION IN AREAS WHICH ARE NOT IN THE RENOVATION WORK AREA, BUT REQUIRED TO ACCOMMODATE NEW WORK AND REMOVAL OF ABANDONED SYSTEMS.

H. REFER TO MECHANICAL AND PLUMBING DRAWINGS FOR DEMOLITION/RELOCATION OF MECHANICAL OR PLUMBING EQUIPMENT. THE CONTRACTOR SHALL DISCONNECT AND REMOVE ALL CONDUIT, WIRE AND ASSOCIATED DEVICES RELATING TO EQUIPMENT BEING REMOVED.

I. PRIOR TO THE INTERRUPTION OF EXISTING FEEDERS OR PANELS, THE CONTRACTOR SHALL VERIFY, BY MEANS OF TRACING ALL EXISTING CIRCUITS, THAT ALL BRANCH CIRCUITS BEING FED FROM DEMOLISHED/RELOCATED FEEDERS AND PANELS ARE NOT SERVING AREAS WHICH ARE TO REMAIN. WHERE NECESSARY, RECONNECT CIRCUITS TO CORRESPONDING NEW OR EXISTING TO REMAIN BRANCH CIRCUIT PANELS. THESE CONDITIONS SHALL APPLY TO FIRE ALARM, COMMUNICATIONS, CONTROL AND SPECIAL SYSTEMS.

J. INSIDE THE BUILDING ARE EXISTING FLOOR RECEPTACLES. CONTRACTOR SHALL LOCATE ALL, DISCONNECT ALL EXISTING FLOOR RECEPTACLES, AND REMOVE WIRING TO SOURCE. WIRE MAY NOT BE ABANDONED IN PLACE UNLESS COMPLETELY NECESSARY AND AFTER COORDINATION WITH OWNER/ENGINEER. CONTRACTOR SHALL COVER FORMER FLOOR OUTLET LOCATIONS WITH NEW FLOORING.

COA#: 5338 Expires 06/30/2023
520 West Broadway Avenue Suite 101
Broken Arrow, Oklahoma 74012

918.895.6510 p
hpengineeringinc.com/

HP ENGINEERING

THE MCKINNEY PARTNERSHIP
architects

3600 West Main
Suite 200
Norman, Oklahoma
73072
405.360.1400 p
405.364.8287 f
tmparch.com

Copyright: ©2022 The McKinney Partnership Architects, P.C., All Rights Reserved

Seal:

LICENSED PROFESSIONAL ENGINEER
DAN MCDONOUGH
21299
OKLAHOMA
11/18/22
CA5338(PE)

Project:

City of Norman
Municipal Complex Renovation
Municipal Court
321 N. Webster Avenue
Norman, OK

Issue Date:
11/18/22 ISSUED FOR BIDDING

Revisions:

Project Number:
CM083319 (201253R)

Sheet Title:
ELECTRICAL DEMO PLAN

Sheet Number:
ED1.1

Autodesk Docs://201188K Norman Courthouse/221188K CoN County Courthouse.rvt
11/18/2022 12:49:07 PM

FIRE ALARM DESIGN/APPROVAL NOTE:
THE SHOWN FIRE ALARM SYSTEM IS FOR INITIAL DESIGN APPROVAL . THE AUTHORITY HAVING JURISDICTION (AHJ) SHALL RECEIVE SHOP DRAWINGS, CALCULATIONS, AND EQUIPMENT DATA FROM THE INSTALLING FIRM. THE INSTALLING FIRM SHALL BE STATE LICENSED AND NICET CERTIFIED. INSTALLING FIRM MUCT PROVIDE DRAWINGS AND DATA TO THE AHJ PRIOR TO THE 50% BUILDING INSPECTION. HORN AND STROBE PROVIDED BY FIRE ALARM CONTRACTOR. E.C. SHALL BE RESPONSIBLE FOR ADDING DEVICE ROUGH-INS PER DIRECTOIN OF FIRE MARSHALL. FACP LOCATION SHALL BE COORDINATED IN FIELD PRIOR TO ROUGH-IN.

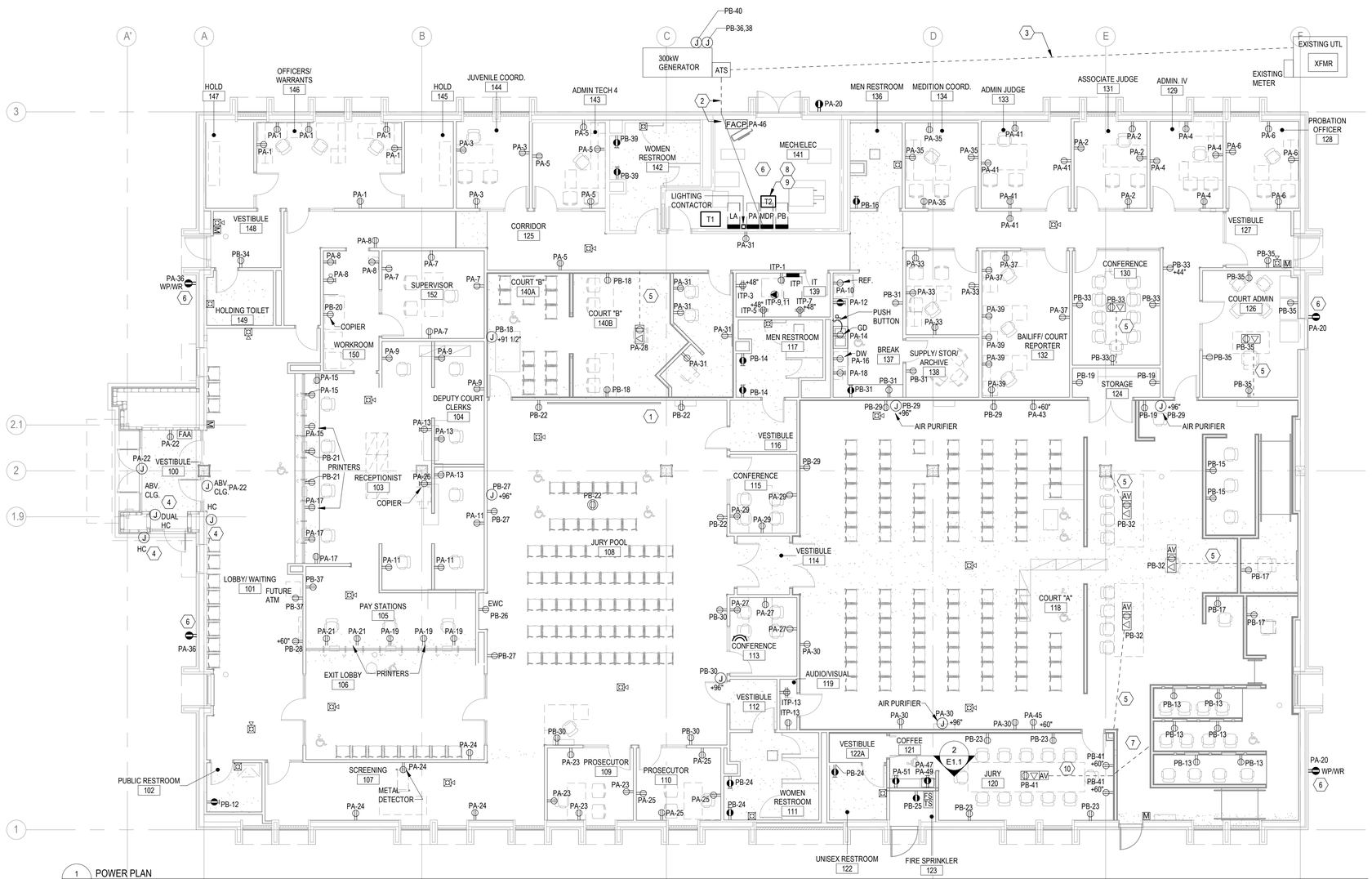

1 E1.1 POWER PLAN
1/8" = 1'-0"

POWER GENERAL NOTES

A. BRANCH CIRCUIT CONDUCTORS SHALL NOT BE SMALLER THAN #12AWG. CONDUCTORS FOR 120V BRANCH CIRCUITS MORE THAN 100 FT SHALL NOT BE SMALLER THAN #10AWG. CONDUCTORS FOR 120V BRANCH CIRCUITS MORE THAN 200 FT SHALL NOT BE SMALLER THAN #8AWG.

B. VERTICALLY ALIGN ALL WALL BOXES WHEREVER POSSIBLE (I.E. RECEPTACLES, LIGHT SWITCHES, THERMOSTATS, FIRE ALARM DEVICES), VERIFY WITH ARCHITECT PRIOR TO INSTALLATION.

C. WHEN WIRE SIZE IS DESIGNATED ADJACENT TO A HOME RUN, WIRE SIZE SHOWN SHALL BE UTILIZED FOR ENTIRE CIRCUIT (NOT HOME RUN ONLY).

D. WHERE VOICE/DATA JACK SHOWN ADJACENT TO POWER OUTLET, VOICE/DATA SHALL BE MOUNTED WITHIN 12" POWER OUTLET MEASURED CENTER TO CENTER WHEN POSSIBLE.

E. ALL DEVICE PLATES AND J-BOXES SHALL BE LABELED WITH PANEL AND CIRCUIT NUMBER. FACEPLATES WITH CLEAR STICK-ON LABEL AND 1/4" LETTERING. J-BOXES WITH PERMANENT MARKER WITH 1/2" LETTERS MIN.

F. EXISTING JUNCTION BOXES ABOVE CEILING FOR ACCESS CONTROL TO REMAIN CONNECTED AND OPERATIONAL AT ALL TIME.

G. ALL ROOF MOUNTED RECEPTACLES TO REMAIN OPERATIONAL AFTER COMPLETION.

H. POWER TO CHRISTMAS LIGHTS, TIMER FOR CHRISTMAS LIGHTS AND ROOF LIGHTS SHALL REMAIN OPERATIONAL AFTER COMPLETION. PROVIDE ALL NECESSARY DEVICES, WIRING, RELAYS ETC FOR A COMPLETE SYSTEM.

POWER PLAN NOTES

1. PROJECTOR SCREEN IS FIXED AND DOES NOT REQUIRE POWER.

2. NEW 400A FEED TO EXISTING MDP. REFER TO SHEET E3.1 ONE LINE RISER DIAGRAM

3. NEW 400A FEED TO NEW ATS. REFER TO SHEET E3.1 ONE LINE RISER DIAGRAM. DEMO OR ABANDON EXISTING SECONDARY.

4. PROVIDE 120 V POWER AND PUSH BUTTON/CONTROL ROUGH-IN FOR HANDICAPPED DOOR PER MANUFACTURER'S WRITTEN INSTRUCTIONS FOR COMPLETE AND OPERATIONAL SYSTEM. SEE TECHNOLOGY DRAWINGS FOR ADDITIONAL INFORMATION.

5. PROVIDE SEPARATE UNDERFLOOR PVC CONDUITS FOR FLOOR BOXES AS FOLLOW:
RFBB2E-OG - (2) 1" C FOR POWER AND DATA.
EFB45S-OG - (1) 1"C FOR POWER, (1) 1" AND (1) 1-1/4"C FOR DATA.
EFB6S-OG - (1) 1"C FOR POWER, (1) 1" AND (2) 1-1/4"C FOR DATA.
COORDINATE EXACT BOX LOCATION WITH IP DESIGN PRIOR TO ROUGH-IN. CONDUITS SHALL RISE UP INSIDE WALL TO ABOVE CEILING FOR AUDIO VISUAL AND DATA.

6. EXISTING RECEPTACLES IN THIS AREA TO REMAIN. CONTRACTOR SHALL RECIRCUIT RECEPTACLES TO NEW PANEL AS REQUIRED. CONTRACTOR SHALL PROVIDE BOXES, CONDUIT, CABLING, AND OTHER NECESSARY APPURTENANCES FOR A COMPLETE AND OPERATIONAL SYSTEM. REFER TO ELECTRICAL DEMOLITION PLAN FOR ADDITIONAL INFORMATION.

7. PROVIDE 2" CONDUIT UNDERGROUND TO HALFWALL. VERIFY EXACT LOCATION WITH ARCHITECT PRIOR TO INSTALLATION.

8. TRANSFORMER TO BE INSTALLED ABOVE NEW ELECTRICAL PANELS. PROVIDE SUPPORT AS PER NEC, MANUFACTURER'S REQUIREMENT AND LOCAL AHJ.

9. CONTRACTOR TO PROVIDE SUPPORT FOR NEW TRANSFORMER "T2" AS PER NEC 450. COORDINATE WITH OTHER EQUIPMENT IN THE PRIOR TO INSTALLATIONS.

10. PROVIDE SEPARATE UNDERFLOOR PVC CONDUITS FOR FLOOR BOXES AS FOLLOW:
RFBB2E-OG - (2) 1" C FOR POWER AND DATA.
EFB45S-OG - (1) 1"C FOR POWER, (1) 1" AND (1) 1-1/4"C FOR DATA.
EFB6S-OG - (1) 1"C FOR POWER, (1) 1" AND (2) 1-1/4"C FOR DATA.
COORDINATE EXACT BOX LOCATION WITH IP DESIGN PRIOR TO ROUGH-IN. JURY ROOM CONDUITS WILL TERMINATE INTO THE WALL BOX BEHIND MONITOR.CONDUITS SHALL RISE UP INSIDE WALL TO ABOVE CEILING FOR AUDIO VISUAL AND DATA.

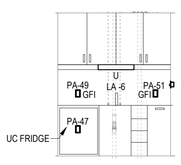

2 E1.1 COFFEE SECTION VIEW
1/4" = 1'-0"

THE MCKINNEY PARTNERSHIP
architects
3600 West Main
Suite 200
Norman, Oklahoma
73072
405.360.1400 p
405.364.8287 f
tmparch.com

Copyright © 2022 The McKinney Partnership Architects, P.C., All Rights Reserved

Seal:

Project:

City of Norman
Municipal Complex Renovation
Municipal Court

321 N. Webster Avenue
Norman, OK

Issue Date:
11/18/22 ISSUED FOR BIDDING

Revisions:

Project Number:
CM083319 (201253R)

Sheet Title:
ELECTRICAL POWER PLAN

Sheet Number:
E1.1

COA#: 5338 Expires 06/30/2023
520 West Broadway Avenue Suite 101
Broken Arrow, Oklahoma 74012

918.895.6510 p
hpengineeringinc.com/
HP ENGINEERING

Autodesk Docs://201188K Norman Courthouse/221188K ColN County Courthouse.rvt
11/18/2022 12:48:45 PM

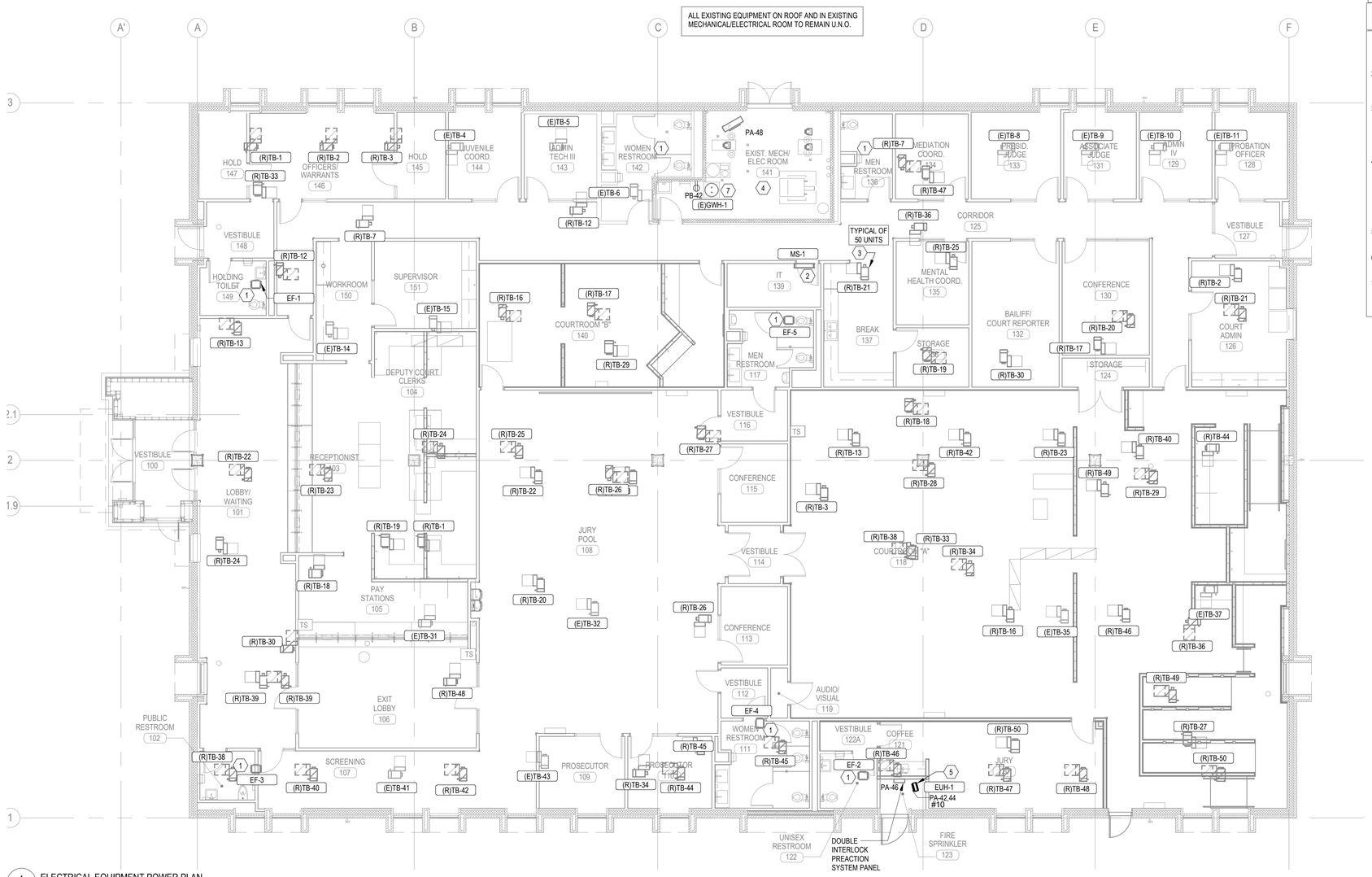

1 / E1.2 ELECTRICAL EQUIPMENT POWER PLAN
1/8" = 1'-0"

EQUIP POWER GENERAL NOTES

A. BRANCH CIRCUIT CONDICTORS SHALL NOT BE SMALLER THAN #12 AWG. CONDUCTORS FOR 120V BRANCH CIRCUITS MORE THAN 100 FT SHALL NOT BE SMALLER THAN #8 AWG.

B. ALL NEW ADDED CONDUIT AND WIRING TO MECHANICAL EQUIPMENT AND ROOF TOP RECEPTACLES SHALL BE ROUTED BELOW ROOF INSIDE BUILDING ENVELOPE. ALL PENETRATIONS SHALL BE THOROUGHLY SEALED AND SHALL NOT VOID ROOF MANUFACTURER'S WARRANTY.

C. CONTRACTOR SHALL BE RESPONSIBLE FOR COORDINATING CONDUIT, WIRE AND BREAKER SIZE IF NON BASIS OF DESIGN EQUIPMENT IS UTILIZED AND RESIZE AT NO ADDITIONAL COST TO OWNER.

D. ALL EQUIPMENT CONNECTIONS ARE BASED ON BASIS OF DESIGN EQUIPMENT. ACTUAL EQUIPMENT SHALL BE SELECTED DURING CONSTRUCTION. CONTRACTOR SHALL COORDINATE WITH OWNER'S ACTUAL EQUIPMENT PROVIDED AND ASSOCIATED CUT SHEETS BEFORE ROUGH-IN AND MODIFY DEVICES, BREAKERS, CONDUIT AND WIRING AS REQUIRED IN COORDINATION WITH PROJECT ENGINEER AT NO ADDITIONAL EXPENSE TO THE OWNER.

E. WHEN WIRE SIZE IS DESIGNATED ADJACENT TO A HOME RUN, WIRE SIZE SHOWN SHALL BE UTILIZED FOR ENTIRE CIRCUIT (NOT HOME RUN ONLY).

F. PROVIDE ROUGH-IN FOR ALL THERMOSTAT LOCATIONS. COORDINATE WITH MECHANICAL.

EQUIP. POWER PLAN NOTES

1. EXHAUST FAN SHALL POWERED AND INTERLOCKED WITH LIGHTS. REFER TO MECHANICAL SCHEDULE FOR EXHAUST FAN CONTROL.

2. E.C. SHALL MAKE CONNECTIONS BETWEEN THE OUTDOOR UNIT (MCU-1) AND INDOOR UNIT (MS-1) OF THE MINI SPLIT SYSTEMS.

3. COORDINATE NEW LOCATION FOR RELOCATED VAV BOXESWITH MECHANICAL CONTRACTOR. EXTEND EXISTING WIRES AND CONDUITS AS NECESSARY. RECONNECT TO NEW ELECTRICAL PANEL AND PROVIDE A NEW CIRCUIT BREAKER FOR A COMPLETE AND WORKING SYSTEM.

4. CONTRACTOR RESPONSIBLE TO PROVIDE POWER TO ALL EXISTING TO REMAIN EQUIPMENT IN THIS ROOM. PROVIDE WIRE SIZE AND FEEDER AS PER NEC BASE ON NAMEPLATE, AND MANUFACTURER RECOMMENDATION AS REQUIRED. EXTEND AND RECONNECT ALL WIRING AS REQUIRED. ALL EQUIPMENT SHOULD BE OPERATIONAL AFTER WORK COMPLETION.

5. DISCONNECT SWITCH 240V, 30A, NEMA 1. FUSE AS PER MANUFACTURER SPECIFICATIONS.

6. DISCONNECTS TO BE PROVIDED WITH EXHAUST FAN AND GRAVITY HOODS.

7. EXISTING GAS WATER HEATER. CONTRACTOR SHALL PROVIDE NEW RECEPTACLE FOR GHW. CONTRACTOR SHALL RECONNECT TO NEW PANEL WITH NEW BREAKER AND EXTEND WIRING USING THE SAME SIZES AS REQUIRED.

THE MCKINNEY PARTNERSHIP
architects

3600 West Main
Suite 200
Norman, Oklahoma
73072
405.360.1400 p
405.364.8287 f
tmparch.com

Copyright: ©2022 The McKinney Partnership Architects, P.C., All Rights Reserved

Seal:

LICENSED PROFESSIONAL ENGINEER
DAN MCDONOUGH
21299
OKLAHOMA
11/18/22
CA5338(PE)

Project:

City of Norman
Municipal Complex Renovation
Municipal Court
321 N. Webster Avenue
Norman, OK

Issue Date:
11/18/22 ISSUED FOR BIDDING

Revisions:

Project Number:
CM083319 (201253R)

Sheet Title:
ELECTRICAL EQUIPMENT PLAN

Sheet Number:
E1.2

COA#: 5338 Expires 06/30/2023
520 West Broadway Avenue Suite 101
Broken Arrow, Oklahoma 74012

918.895.6510 p
hpengineeringinc.com/

HP ENGINEERING

Autodesk Docs://201188K Norman Courthouse/221188K CoN County Courthouse.rvt
11/18/2022 12:48:46 PM

ROOF POWER PLAN NOTES

1. E.C. SHALL MAKE CONNECTIONS BETWEEN THE OUTDOOR UNIT (MCU-1) AND INDOOR UNIT (MS-1) OF THE MINI SPLIT SYSTEMS.
2. DISCONNECT SWITCH 240V, 30A, NEMA 3R. FUSE AS PER MANUFACTURER SPECIFICATIONS.
3. DISCONNECTS TO BE PROVIDED WITH EXHAUST FAN. E
4. MECHANICAL EQUIPMENT THAT ARE EXISTING TO REMAIN SHALL BE RECONNECT TO NEW PANEL WITH NEW BREAKER. CONTRACOT SHALL MATCH BREAKER SIZE OF EXISTING AND EXTEND WIRING USING THE SAME SIZE WIRE AS REQUIRED. CONTRACTOR SHALL REFEED NEARBY MAINTENANCE RECEPTACLE TO ELECTRICAL PANEL AS REQUIRED.

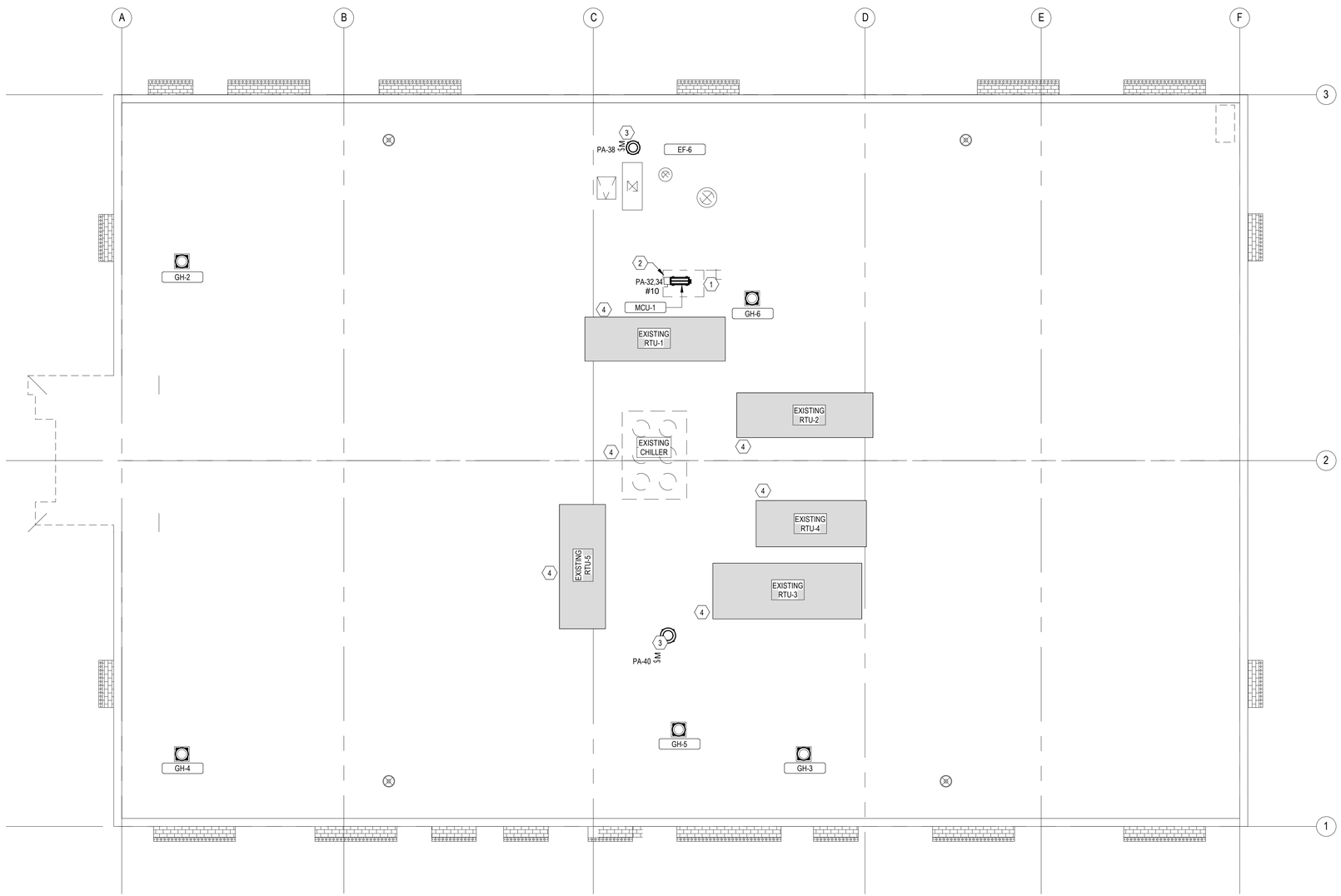

1 / E1.3 ROOF MECHANICAL PLAN
1/8" = 1'-0"

THE MCKINNEY PARTNERSHIP
architects

3600 West Main
Suite 200
Norman, Oklahoma
73072
405.360.1400 p
405.364.8287 f
tmparch.com

Copyright: ©2022 The McKinney Partnership Architects, P.C., All Rights Reserved

Seal:

LICENSED PROFESSIONAL ENGINEER
DAN MCDONOUGH
21299
OKLAHOMA
11/18/22
CA5338(PE)

Project:

City of Norman
Municipal Complex Renovation
Municipal Court
321 N. Webster Avenue
Norman, OK

Issue Date:
11/18/22 ISSUED FOR BIDDING

Revisions:

Project Number:
CM083319 (201253R)

Sheet Title:
ROOF POWER PLAN

Sheet Number:
E1.3

COA#: 5338 Expires 06/30/2023
520 West Broadway Avenue Suite 101
Broken Arrow, Oklahoma 74012

918.895.6510 p
hpengineeringinc.com/

HP ENGINEERING

Autodesk Docs://201188K Norman Courthouse/221188K CoN County Courthouse.rvt
11/18/2022 12:48:46 PM

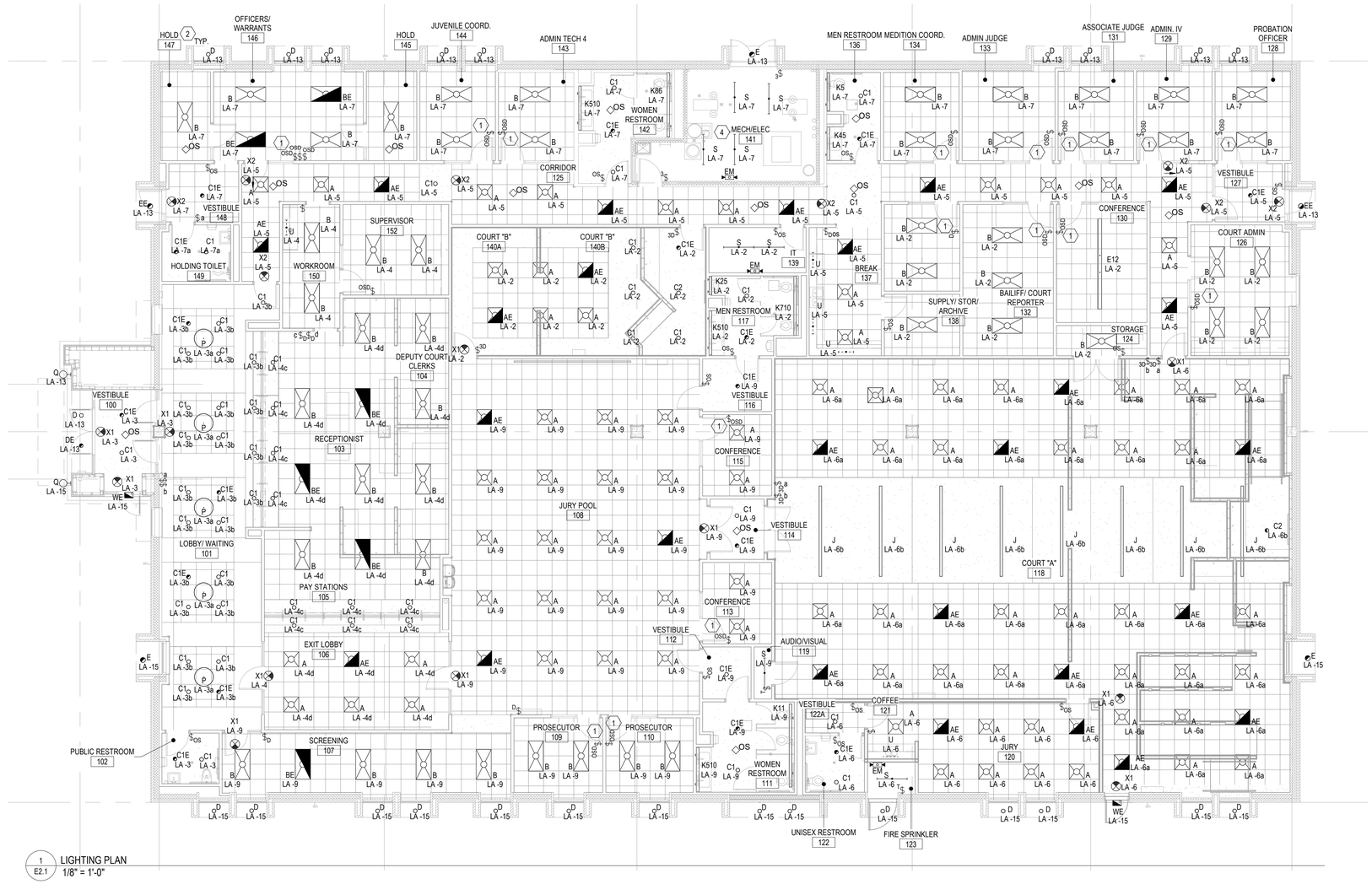

1 LIGHTING PLAN
E2.1 1/8" = 1'-0"

LIGHTING GENERAL NOTES

A. BRANCH CIRCUIT CONDUCTORS SHALL NOT BE SMALLER THAN #12 AWG. CONDUCTORS FOR 120V BRANCH CIRCUITS MORE THAN 100 FT SHALL NOT BE SMALLER THAN #10 AWG. CONDUCTORS FOR 120V BRANCH CIRCUITS MORE THAN 200 FT SHALL NOT BE SMALLER THAN #8 AWG.

B. VERTICALLY ALIGN ALL WALL BOXES WHEREVER POSSIBLE (I.E. RECEPTACLES, LIGHT SWITCHES, THERMOSTATS, FIRE ALARM DEVICES). VERIFY WITH ARCHITECT PRIOR TO INSTALLATION.

C. REFER TO LIGHTING FIXTURE SCHEDULE FOR ADDITIONAL INFORMATION ON MOUNTING HEIGHTS OF WALL MOUNTED FIXTURES.

D. CONNECT EMERGENCY AND EXIT LIGHTS TO UNSWITCHED HOT LEG OF LIGHTING CIRCUIT FOR CONTINUOUS OPERATION.

E. WHERE PLANS SHOW MULTIPLE LINE VOLTAGE SWITCHES SHOWN IN ONE LOCATION, DESIGN INTENT IS TO INSTALL SWITCHES IN MULTI-GANG BOXES.

F. CONTRACTOR SHALL PROVIDE ALL LOW VOLTAGE WIRING AS REQUIRED FOR DIMMING OF LIGHT FIXTURES.

G. IT IS THE CONTRACTOR'S RESPONSIBILITY TO VERIFY ALL DIMMER SWITCHES TO BE FULLY COMPATIBLE WITH THE FIXTURES AND LAMPS PROVIDED BEFORE SUBMITTING DEVICES FOR APPROVAL.

H. OCC SENSOR COVERAGE VARIES PER MANUFACTURER. IT IS THE CONTRACTOR'S RESPONSIBILITY TO VERIFY COMPLETE COVERAGE IN AREAS/ROOMS WITH SENSORS SHOWN WITH ACTUAL OCCUPANCY SENSORS PROVIDED. PROVIDE EXTENDED RANGE OCCUPANCY SENSORS OR ADDITIONAL OCCUPANCY SENSORS WHERE REQUIRED TO ACHIEVE FULL COVERAGE.

I. COORDINATE MOUNTING HEIGHTS OF ALL FIXTURES SUSPENDED AND WALL MOUNT WITH ARCHITECT PRIOR TO INSTALLATION.

J. REPLACE EXISTING EXTERIOR FIXTURES WITH NEW FIXTURES IN SAME LOCATIONS. EXISTING CONTROL TO REMAIN.

K. ALL EXTERIOR FIXTURES SHALL BE CONTROLLED VIA PHOTOCELL / TIME CLOCK.

LIGHTING PLAN NOTES

1. IN THIS ROOM CONTRACTOR MAY SUBSTITUTE 0-10V WIRING SYSTEM AND OCC SENSOR DIMMING SWITCH WITH SENSOR SWITCH WSXA (JOT) ENABLED WALL SWITCH SENSOR AND LIGHT FIXTURE SPECIFIED WITH BOOTHTOOTH JOT CAPABILITY ADDED. SWITCH SHALL BE HARDWIRED AS REQUIRED. BATTERY OPERATED SWITCHES ARE UNACCEPTABLE. THIS OPTION REMOVES THE REQUIREMENT FOR 0-10V WIRING BETWEEN FIXTURE.

2. NEW "RETROFIT" FIXTURE INSTALLED INTO EXISTING SOFFIT. REPAIR SOFFIT BACK TO ORIGINAL CONDITION AFTER INSTALLING NEW FIXTURE. COORDINATE WITH ARCHITECT

3. REPLACE EXISTING EXTERIOR FIXTURES WITH NEW FIXTURES IN SAME LOCATIONS. EXISTING CONTROL TO REMAIN.

4. CONTRACTOR SHALL INSTALL AND MOUNT NEW LIGHT FIXTURES IN SAME LOCATION AS EXISTING FIXTURES. LIGHTS SHALL BE SUSPENDED FROM STRUCTURE WITH CHAIN.

COA#: 5338 Expires 06/30/2023
520 West Broadway Avenue Suite 101
Broken Arrow, Oklahoma 74012

918.895.6510 p
hpengineeringinc.com/

HP ENGINEERING

THE MCKINNEY PARTNERSHIP
architects

3600 West Main
Suite 200
Norman, Oklahoma
73072
405.360.1400 p
405.364.8287 f
tmparch.com

Copyright: © 2022 The McKinney Partnership Architects, P.C., All Rights Reserved

Seal:

LICENSED PROFESSIONAL ENGINEER
DAN MCDONOUGH
21299
OKLAHOMA
11/18/22
CA5338(PE)

Project:

City of Norman
Municipal Complex Renovation
Municipal Court

321 N. Webster Avenue
Norman, OK

Issue Date:
11/18/22 ISSUED FOR BIDDING

Revisions:

Project Number:
CM083319 (201253R)

Sheet Title:
ELECTRICAL LIGHTING PLAN

Sheet Number:
E2.1

Autodesk Docs://201188K Norman Courthouse/201188K CoN County Courthouse.rvt
11/18/2022 12:48:51 PM

LUMINAIRE SCHEDULE

CALLOUT	SYMBOL	MANUFACTURER	MODEL	DESCRIPTION	LAMP	INPUT WATTS	BALLAST	MOUNTING	VOLTS
A		LITHONIA LIGHTING - BLC	BLC 2X2 4000LM 80CRI 35K ADSM MIN1O ZT MVOLT	2'X2' RECESSED CENTER BASKET TROFFER LED, 4000 LUMENS, 80 CRI, 3500K, CURVED SMOOTH DIFUSER, 0-10V DIMMING 1%, MVOLT	LED	36	LED DRIVER	RECESSED	277V 1P 2W
AE		LITHONIA LIGHTING - BLC	BLC 2X2 4000LM 80CRI 35K ADSM MIN1O ZT MVOLT E10WLCP	2'X2' RECESSED CENTER BASKET TROFFER LED, 4000 LUMENS, 80 CRI, 3500K, CURVED SMOOTH DIFUSER, 0-10V DIMMING 1%, MVOLT, 10 WATT EMERGENCY ATTERY BACKUP.	LED	36	LED DRIVER	RECESSED	277V 1P 2W
B		LITHONIA LIGHTING - CPX SERIES	CPX 2X4 4000LM 35K M2	2'X4' LED FLAT PANEL, 5000 LUMENS, 80 CRI, 3500K, 0-10V DIMMING 1%, MVOLT	LED	39	LED DRIVER	RECESSED	277V 1P 2W
BE		LITHONIA LIGHTING - CPX SERIES	CPX 2X4 4000LM 35K M2 PS1055CP	2'X4' LED FLAT PANEL, 5000 LUMENS, 80 CRI, 3500K, 0-10V DIMMING 1%, MVOLT,10 WATT EMERGENCY BATTERY BACKUP.	LED	39	LED DRIVER	RECESSED	277V 1P 2W
C1		LITHONIA LIGHTING - LDN4 SERIES	LDNA 35/15 LO4AR LD MVOLT GZ10	4" RECESSED, LED DOWNLIGHT, 3500K, 1500 LUMENS, AR CLEAR TRIM, MATTE DIFFUSE FINISH, 0-10V DIMMING, FACTORY BAR HANGERS FOR SPECIFIC CEILING TYPES.	LED	18	LED DRIVER	RECESSED	277V 1P 2W
C1E		LITHONIA LIGHTING - LDN4 SERIES	LDNA 35/15 LO4AR LD MVOLT GZ10 EL	4" RECESSED, LED DOWNLIGHT, 3500K, 1500 LUMENS, AR CLEAR TRIM, MATTE DIFFUSE FINISH, 0-10V DIMMING, FACTORY BAR HANGERS FOR SPECIFIC CEILING TYPES. 10 WATT EMERG BATTERY PACK.	LED	18	LED DRIVER	RECESSED	277V 1P 2W
C2		LITHONIA LIGHTING - LDN4WW SERIES	LDN4 35/10 LW6 AR LD MVOLT GZ10	4", RECESSED, LED DOWNLIGHT, 3500K, 1500 LUMENS, WALLWASH, 65 DEGREE AINGLE, AR CLEAR TRIM, MATTE DIFFUSE FINISH, 0-10V DIMMING, FACTORY BAR HANGERS FOR SPECIFIC CEILING TYPES.	LED	58	LED DRIVER	RECESSED	277V 1P 2W
D		LITHONIA LIGHTING - LBR6 SERIES	LBR6 1000LM 40K AR LSS MWD MVOLT	6", RECESSED, RETROFIT LED DOWNLIGHT, SELF FLANGE, 1000LM, 4000K, CLEAR, SEMI SPECULAR, MVOLT, 0-10V DIM.	LED	16	LED DRIVER	RECESSED	277V 1P 2W
DE		LITHONIA LIGHTING - LBR6 SERIES	LBR6 1000LM 40K AR LSS MWD MVOLT E10WCPR	6", RECESSED, RETROFIT LED DOWNLIGHT, SELF FLANGE, 1000LM, 4000K, CLEAR, SEMI SPECULAR, MVOLT, 0-10V DIM, 10 WATT	LED	13	LED DRIVER	RECESSED	277V 1P 2W
E		LITHONIA LIGHTING - LBR8 SERIES	LBR8 10LM 40K AR LSS MWD MVOLT	8", RECESSED, RETROFIT LED DOWNLIGHT, SELF FLANGE, 2000LM, 4000K, CLEAR, SEMI SPECULAR, MVOLT, 0-10V DIM, WET LOC LISTED	LED	16	LED DRIVER	RECESSED	277V 1P 2W
E12		FLUXWERX APS SERIES	APS R A D 35 (COLOR BY ARCHITECT) 12FT (COORD. CLG TYPES) F2 M 06 G	12' LONG SUSPENDED, RADUIS ENDCAP, 75UP/25DN DISTRIBUTION, 34 WATTS PER SECTION, WHITE, 3500K, 0-10V DIMMING TO 3%, MOVLT, 6' SUSPENSION.	LED	102	LED DRIVER	PENDANT/SURFACE	277V 1P 2W
EE		LITHONIA LIGHTING - LBR8 SERIES	LRB8 15LM 40K AR LSS MWD MVOLT	8", RECESSED, RETROFIT LED DOWNLIGHT, SELF FLANGE, 1000LM, 4000K, CLEAR, SEMI SPECULAR, MVOLT, 0-10V DIM, 10 WATT EM BATTERY PACK.	LED	16	LED DRIVER	RECESSED	277V 1P 2W
EM		LITHONIA ELM6L SERIES	ELM6L 640LM UVOLT NICAD	EMERGENCY LIGHT, CONTEMPORARY, ADJUSTABLE OPTICS, 1100 LUMENS, LITHIUM ION	LED	3	ELECTRONIC	WALL	277V 1P 2W
J		FLUXWERX NOTCH NT1-B SERIES	NT1 L D2 B D 35 F2 M 12FT E	12' LONG MICROSCALE PENDANT, FLUSH FROSTED DIRECT SHIELDING, 1000 LUMENS PER FT, 3500K, ANADOLIC OPTICS, DADO ENDCAP, SINGLE CIRCUIT, UNIVERSAL VOLTAGE, DIMMING TO 1%, WHITE FINISH, GP/120 SUSPENSION, 14FT.	(1) LED	133	LED DRIVER	SURFACE	277V 1P 2W
K25		FINELITE HP-2 SERIES	HP 2 WM ID 2'-5" H 835 TG RG-LHC 96LG 120 SC FC-10 MB FE SW	2'-5" LONG, WALL MOUNT, INDIRECT / DIRECT, HIGH OUTPUT UPLIGHT, HIGH OUTPUT DOWNLIGHT, 80 CRI, 3500K, TOP GLOW UPLIGHT, HEX LOUVER DOWNLIGHT, LOW GLOSS WHITE REFLECTOR, SINGLE CIRCUIT, 0-10v DIMMING TO 10%, MOUNTING BRACKET, FLAT ENDCAP, SIGNAL WHITE	LED	48.6	ELECTRONIC	SURFACE	277V 1P 2W
K45		FINELITE HP-2 SERIES	HP 2 WM ID 4'-5" H 835 TG RG-LHC 96LG 120 SC FC-10 MB FE SW	4'-5" LONG, WALL MOUNT, INDIRECT / DIRECT, HIGH OUTPUT UPLIGHT, HIGH OUTPUT DOWNLIGHT, 80 CRI, 3500K, TOP GLOW UPLIGHT, HEX LOUVER DOWNLIGHT, LOW GLOSS WHITE REFLECTOR, SINGLE CIRCUIT, 0-10v DIMMING TO 10%, MOUNTING BRACKET, FLAT ENDCAP, SIGNAL WHITE	LED	72	ELECTRONIC	SURFACE	277V 1P 2W
K6		FINELITE HP-2 SERIES	HP 2 WM ID 6' H 835 TG RG-LHC 96LG 120 SC FC-10 MB FE SW	6' LONG, WALL MOUNT, INDIRECT / DIRECT, HIGH OUTPUT UPLIGHT, HIGH OUTPUT DOWNLIGHT, 80 CRI, 3500K, TOP GLOW UPLIGHT, HEX LOUVER DOWNLIGHT, LOW GLOSS WHITE REFLECTOR, SINGLE CIRCUIT, 0-10v DIMMING TO 10%, MOUNTING BRACKET, FLAT ENDCAP, SIGNAL WHITE	LED	108	ELECTRONIC	SURFACE	277V 1P 2W
K510		FINELITE HP-2 SERIES	HP 2 WM ID 5'-10" H 835 TG RG-LHC 96LG 120 SC FC-10 MB FE SW	5' - 10" LONG, WALL MOUNT, INDIRECT / DIRECT, HIGH OUTPUT UPLIGHT, HIGH OUTPUT DOWNLIGHT, 80 CRI, 3500K, TOP GLOW UPLIGHT, HEX LOUVER DOWNLIGHT, LOW GLOSS WHITE REFLECTOR, SINGLE CIRCUIT, 0-10v DIMMING TO 10%, MOUNTING BRACKET, FLAT ENDCAP, SIGNAL WHITE	LED	126	LED DRIVER	SURFACE	277V 1P 2W
K11		FINELITE HP-2 SERIES	HP 2 WM ID11' H 835 TG RG-LHC 96LG 120 SC FC-10 MB FE SW	11' LONG, WALL MOUNT, INDIRECT / DIRECT, HIGH OUTPUT UPLIGHT, HIGH OUTPUT DOWNLIGHT, 80 CRI, 3500K, TOP GLOW UPLIGHT, HEX LOUVER DOWNLIGHT, LOW GLOSS WHITE REFLECTOR, SINGLE CIRCUIT, 0-10v DIMMING TO 10%, MOUNTING BRACKET, FLAT ENDCAP, SIGNAL WHITE	LED	198	LED DRIVER	SURFACE	277V 1P 2W
K5		FINELITE HP-2 SERIES	HP 2 WM ID 5' H 835 TG RG-LHC 96LG 120 SC FC-10 MB FE SW	5' LONG, WALL MOUNT, INDIRECT / DIRECT, HIGH OUTPUT UPLIGHT, HIGH OUTPUT DOWNLIGHT, 80 CRI, 3500K, TOP GLOW UPLIGHT, HEX LOUVER DOWNLIGHT, LOW GLOSS WHITE REFLECTOR, SINGLE CIRCUIT, 0-10v DIMMING TO 10%, MOUNTING BRACKET, FLAT ENDCAP, SIGNAL WHITE	LED	104	LED DRIVER	SURFACE	277V 1P 2W
K710		FINELITE HP-2 SERIES	HP 2 WM ID 7'-10" H 835 TG RG-LHC 96LG 120 SC FC-10 MB FE SW	7'-10" LONG, WALL MOUNT, INDIRECT / DIRECT, HIGH OUTPUT UPLIGHT, HIGH OUTPUT DOWNLIGHT, 80 CRI, 3500K, TOP GLOW UPLIGHT, HEX LOUVER DOWNLIGHT, LOW GLOSS WHITE REFLECTOR, SINGLE CIRCUIT, 0-10v DIMMING TO 10%, MOUNTING BRACKET, FLAT ENDCAP, SIGNAL WHITE	LED	190	LED DRIVER	SURFACE	277V 1P 2W
K511		FINELITE HP-2 SERIES	HP 2 WM ID 5'-11" H 835 TG RG-LHC 96LG 120 SC FC-10 MB FE SW	5'-11" LONG, WALL MOUNT, INDIRECT / DIRECT, HIGH OUTPUT UPLIGHT, HIGH OUTPUT DOWNLIGHT, 80 CRI, 3500K, TOP GLOW UPLIGHT, HEX LOUVER DOWNLIGHT, LOW GLOSS WHITE REFLECTOR, SINGLE CIRCUIT, 0-10v DIMMING TO 10%, MOUNTING BRACKET, FLAT ENDCAP, SIGNAL WHITE	LED	105	LED DRIVER	SURFACE	277V 1P 2W
K86		FINELITE HP-2 SERIES	HP 2 WM ID 8'-6" H 835 TG RG-LHC 96LG 120 SC FC-10 MB FE SW	8'-6" LONG, WALL MOUNT, INDIRECT / DIRECT, HIGH OUTPUT UPLIGHT, HIGH OUTPUT DOWNLIGHT, 80 CRI, 3500K, TOP GLOW UPLIGHT, HEX LOUVER DOWNLIGHT, LOW GLOSS WHITE REFLECTOR, SINGLE CIRCUIT, 0-10v DIMMING TO 10%, MOUNTING BRACKET, FLAT ENDCAP, SIGNAL WHITE	LED	144	LED DRIVER	SURFACE	277V 1P 2W
P		BROWNLEE INNE SERIES	2630 30 BL H30 WHA SCM 35K	30" DIA.X6" DEEP, BLACK FINISH (OUTER) , WHITE ACRYLIC FINISH (INNER) , 32 WATT LED, SINGLE STEM MOUNT (BLACK) 3500K.	(1) LED	34	LED DRIVER	PENDANT	277V 1P 2W
Q		BETA-CALCO TRAY - AG1 SERIES	AG1 677LM 40K D1 G1 LO	LED WALL SCONCE, 3500K, LOW PROFILE, 80 CRI, 675 LUMENS, 0-10V DIMMING TO 1%, SILVER METALIC FRONT FRAME FINISH, SILVER METALIC BACK FRAME FINISH, 75% OF STANDARD OUTPUT.	(1) LED	6	LED DRIVER	WALL	277V 1P 2W
S		LITHONIA LIGHTING - CLX SERIES	CLX L48 5000LM SEF RDL MVOLT GZ10 35K 80CRI	4' LED STRIP, 5000LM, MVOLT, ROUND DIFFUSE LENS, GENERAL DISTRIBUTION, MVOLT, 0-10V DIMMING, 3500K, 80 CRI, WHITE, SURFACE MOUNT IN ROOMS WITH CEILINGS, CHAIN HANGERS IN OPEN CEILING AREAS.	(1) LED	44	LED DRIVER	SURFACE	277V 1P 2W
U		VERSALED UC6 SERIES	UC6 K1 40L 277V K RS 90C	40" UNDERCABINET LED LIGHT, 3500K, 4000 LUMEN, WHITE. 90 CRI	(1) LED	32	LED DRIVER	UNDERCABINET	277V 1P 2W
WE		RAYON T650LED SERIES	T-SERIES LED DL 3786LM UNV 40K T3 PC1	LED RADIUS WALLPACK, DOWNLIGHT, 40W, 3786 LUMENS, 3500K, TYPE 3, SATIN NICKEL FINISH, EMERGENCY BATTERY BACK-UP.	(1) LED	40	LED DRIVER	WALL	277V 1P 2W
X1		LITHONIA EDG SERIES	EDG (COLOR BY ARCHITECT) FACES AS SHOWN ON PLANS R EL SD	EXIT SIGN, EDGELIT, NUMBER FACES AS SHOWN ON PLANS, SELF DIAGNOSTIC, RED LETTERS, EMERGENCY BATTERY PACK.	LED	5	BATTERY	WALL/CEILING	277V 1P 2W
X2		LITHONIA LQM SERIES	LQM P W 3 R ELN SD	EXIT SIGN, UNIVERSAL POLYCARBONATE, SELF DIAGNOSTIC, RED LETTERS, WHITE HOUSING, EMERGENCY BATTERY PACK.	LED	5	BATTERY	WALL/CEILING	277V 1P 2W

A. EC SHALL PROVIDE A SUBMITTAL PACKAGE INCLUDING CUTSHEETS FOR EACH FIXTURE.
B. EC SHALL PROVIDE ALL ACCESSORIES FOR A COMPLETE ASSEMBLY INCLUDING MOUNTING HARDWARE.
C. THE MOUNTING TYPE OF EACH FIXTURE SHALL BE COMPATIBLE WITH INSTALLATION SURFACE OF EACH FIXTURE.
D. ALL FINISHES SHALL BE COORDINATED WITH ARCHITECT AND DOCUMENTED ON SUBMITTALS.
E. EC SHALL PROVIDE THIS FIXTURE U.L. LISTED AND LABELED FOR WET LOCATIONS.

COA#: 5338 Expires 06/30/2023
520 West Broadway Avenue Suite 101
Broken Arrow, Oklahoma 74012

918.895.6510 p
hpengineeringinc.com/

HP ENGINEERING

THE MCKINNEY PARTNERSHIP
architects

3600 West Main
Suite 200
Norman, Oklahoma
73072
405.360.1400 p
405.364.8287 f
tmparch.com

Copyright ©2022 The McKinney Partnership Architects, P.C., All Rights Reserved

Seal:

LICENSED PROFESSIONAL ENGINEER
DAN MCDONOUGH
21299
OKLAHOMA
11/18/22
CA5338(PE)

Project:

City of Norman
Municipal Complex Renovation
Municipal Court
321 N. Webster Avenue
Norman, OK

Issue Date:
11/18/22 ISSUED FOR BIDDING

Revisions:

Project Number:
CM083319 (201253R)

Sheet Title:
LIGHTING SCHEDULE

Sheet Number:
E2.2

Autodesk Docs://201188K Norman Courthouse/221188K CoN County Courthouse.rvt
11/18/2022 12:48:53 PM

PANELBOARD: MDP

Location:
Supply From:
Mounting: SURFACE
Enclosure: NEMA 1

Volts: 480Y/277
Phases: 3
Wires: 4

A.I.C. Rating: FULLY RATED (7)
Mains Type: MCB
Mains Rating: 400 A

Notes:

CKT	Circuit Description	Trip	Poles	Wire	A (kVA)		B (kVA)		C (kVA)		Wire	Poles	Trip	Circuit Description	CKT
1					2.11	3.33									2
3	HW PUMP (13)	20	3				2.11	3.33				3	20	AHU-3 (13)	4
5									2.11	3.33					6
7					4.43	1.33									8
9	CW PUMP (13)	20	3				4.43	1.33				3	15	AHU-5 (13)	10
11									4.43	1.33					12
13					0.94	0.94									14
15	AHU-4 (13)	15	3				0.94	0.94				3	20	AHU-1 (13)	16
17									0.94	0.94					18
19					3.05	17.45									20
21	AHU-2 (13)	30	3	#10			3.05	16.55			--	3	100	T1 (8)	22
23									3.05	19.92					24
25					0.83	4.43									26
27	HWP-2 (13)	20	3				0.83	4.43				3	20	CW-2 (13)	28
29									0.83	4.43					30
31	SPACE	--	1	--	--	0.72									32
33	SPACE	--	1	--			--	0.43			--	3	50	T2 (8)	34
35	SPACE	--	1	--					--	0.43					36
37					3.29	24.93									38
39	LA (8)	225	3	--			3.85	24.93			--	3	175	EXISTING CHILLER (13)	40
41									3.46	24.93					42
		Total Load:			67772 VA		67142 VA		70129 VA						
		Total Amps:			245.0 A		242.4 A		253.5 A						

Legend:

Load Classification	Connected Load	Demand Factor	Demanded Load	Panel Totals	
Other	500 VA	100.00%	500 VA		
Power	69609 VA	100.00%	69609 VA	**Total Conn. Load:**	205043 VA
Spare	79950 VA	100.00%	79950 VA	**Total Feeder Load:**	190597 VA
Lighting	14592 VA	100.00%	14592 VA	**Total Connected Current:**	246.6 A
Receptacle	39392 VA	62.69%	24696 VA	**Total Feeder Current:**	229.3 A
Existing Load	1000 VA	125.00%	1250 VA		

Notes:
REFER TO PANELBOARD NOTES FOR ADDITIONAL INFORMATION.

PANELBOARD NOTES (#)

1. TERMINATE GROUND ON ISOLATED GROUND BUS.
2. INSTALL LOCKING DEVICE FURNISHED WITH PANELBOARD (LOCK-OFF FOR MAINTENANCE).
3. INSTALL LOCKING DEVICE FURNISHED WITH PANELBOARD (LOCK-ON FOR CRITICAL LOAD).
4. GFI BREAKER FOR PERSONNEL PROTECTION (5mA).
5. GFI BREAKER FOR EQUIPMENT PROTECTION (30mA).
6. CONDUCTOR SIZE SHOWN IN PANEL SCHEDULE HAS BEEN INCREASED FOR VOLTAGE DROP. SIZE EQUIPMENT GROUND PROPORTIONALLY PER NEC. REFERENCE GROUND WIRE SIZING CHART.
7. REFER TO FAULT CURRENT SCHEDULE FOR AVAILABLE FAULT CURRENT FOR INTERRUPT RATINGS.
8. REFER TO ONE-LINE DIAGRAM FOR WIRE SIZES.
9. FACTORY WIRED TO LOAD.
10. THRU CONTROLLER. REFER TO LIGHTING CONTROLLER DETAIL.
11. ADD NEW CIRCUIT BREAKER TO EXISTING PANEL. NEW CIRCUIT BREAKER SHALL MATCH AIC RATING, MANUFACTURER, AND TYPE OF EXISTING CIRCUIT BREAKERS.
12. MATCH AIC RATING OF SERVICING DEVICE.
13. EXISTING MECHANICAL AND MECHANICAL EQUIPMENT SHALL BE RECONNECTED TO NEW PANEL. EXTEND EXISTING FEEDER TO NEW PANEL LOCATION WITH SAME SIZE CONDUIT AND CONDUCTORS AS EXISTING.

EQUIPMENT GROUNDING CONDUCTOR SIZING CHART

BRKR AMPS		WIRE SIZE					
15-20	PHASE	12	10	8	6	4
	GROUND	12	10	8	6	4
25-30	PHASE	10	8	6	4	3
	GROUND	10	8	6	4	3
35-50	PHASE	8	6	4	3	2
	GROUND	10	8	4	4	4
60	PHASE	6	4	3	2	1
	GROUND	10	6	6	4	4
70	PHASE	6	4	3	2	1
	GROUND	8	4	4	3	2
80-90	PHASE	4	3	2	1	1/0
	GROUND	8	6	4	4	3
100	PHASE	3	2	1	1/0	2/0
	GROUND	8	6	4	4	3
PER NEC 250.122(B)						

FEEDER SCHEDULE

AMPERAGE	SETS OF CONDUIT	CONDUIT SIZE	CONDUCTOR QTY/SIZE	GROUND QTY/SIZE	AMPERAGE	SETS OF CONDUIT	CONDUIT SIZE	CONDUCTOR QTY/SIZE	GROUND QTY/SIZE
15A	(1)	3/4"	(4) #12	(1) #12	225A	(1)	2 1/2"	(4) #4/0	(1) #4
20A	(1)	3/4"	(4) #12	(1) #12	250A	(1)	3"	(4) #250 KCML	(1) #4
25A	(1)	3/4"	(4) #10	(1) #10	300A	(2)	2"	(4) #1/0	(1) #4
30A	(1)	3/4"	(4) #8	(1) #10	400A	(2)	2 1/2"	(4) #3/0	(1) #3
40A	(1)	3/4"	(4) #6	(1) #10	450A	(2)	2 1/2"	(4) #4/0	(1) #2
45A	(1)	1"	(4) #6	(1) #10	500A	(2)	3"	(4) #250 KCML	(1) #2
50A	(1)	1"	(4) #4	(1) #10	600A	(2)	3"	(4) #350 KCML	(1) #1
60A	(1)	1 1/4"	(4) #4	(1) #10	800A	(3)	3"	(4) #300 KCML	(1) #1/0
70A	(1)	1 1/4"	(4) #3	(1) #8	1000A	(3)	3 1/2"	(4) #400 KCML	(1) #2/0
80A	(1)	1 1/2"	(4) #2	(1) #8	1200A	(4)	3 1/2"	(4) #350 KCML	(1) #3/0
90A	(1)	1 1/2"	(4) #1	(1) #8	1600A	(5)	3 1/2"	(4) #400 KCML	(1) #4/0
100A	(1)	2"	(4) #1	(1) #8	2000A	(6)	3 1/2"	(4) #400 KCML	(1) #250 KCML
125A	(1)	2"	(4) #1/0	(1) #6	2500A	(7)	3 1/2"	(4) #500 KCML	(1) #350 KCML
150A	(1)	2"	(4) #2/0	(1) #6	3000A	(8)	3 1/2"	(4) #500 KCML	(1) #400 KCML
175A	(1)	2"	(4) #3/0	(1) #6	3500A	(10)	3 1/2"	(4) #500 KCML	(1) #500 KCML
200A	(1)	2 1/2"	(4) #12	(1) #6	4000A	(10)	4"	(4) #600 KCML	(1) #500 KCML

FEEDER SIZE GENERAL NOTES:
1. CONDUCTOR QUANTITY BASED ON 3-PHASE 4-WIRE; FOR EQUIPMENT THAT DOES NOT REQUIRE A NEUTRAL OR IS SINGLE PHASE DEDUCT FROM QUANTITY AS REQUIRES
2. CONDUCTOR SIZE IS BASED ON NEC TABLE 310.16 - COPPER 60°C UP TO 100 AMPS, 75°C GREATER THAN 100 AMPS.
3. GROUND SIZES BASED ON NEC TABLE 250.122 - COPPER
4. CONDUIT FILL BASED ON NEC ANNEX C - THW CONDUCTOR INSULATION

EQUIPMENT LABELS

ALL SWITCHBOARDS AND PANELBOARDS SHALL HAVE A LABEL APPLIED TO WARN OF POTENTIAL ARC FLASH HAZARDS

WARNING

ARC FLASH AND SHOCK HAZARD. APPROPRIATE PERSONAL PROTECTIVE EQUIPMENT (PPE) REQUIRED.

NOTES:

A. ALL SWITCHBOARDS AND PANELBOARDS SHALL HAVE A COMMERCIALLY PRODUCED PERMANENT LABEL APPLIED, SIMILAR TO THE ABOVE, TO WARN OF POTENTIAL ARC FLASH HAZARDS, IN ACCORDANCE WITH NEC 110.16 AND NFPA 70E.

B. LABELING MAY BE COMPLETED BY EQUIPMENT MANUFACTURER, EQUIPMENT VENDOR/SUPPLIER, OR THE CONTRACTOR. THE CONTRACTOR SHALL VERIFY THAT ALL SWITCHBOARDS AND PANELBOARDS ARE PROPERLY LABELED IN THE FIELD.

1. CONDUIT SIZED BASED ON CONDUCTOR PROPERTIES LISTED IN THE CURRENT NEC EDITION, CHAPTER, 9, TABLES 5 AND 5A, AND CONDUIT AREAS LISTED CHAPTER 9, TABLE 4 FOR EMT WITH 40% FILL. OTHER CONDITIONS MAY REQUIRE A LARGER CONDUIT, SUCH AS UNDERGROUND PVC, SIZED FOR NEC.
2. GROUND SIZES: EQUIPMENT GROUNDING CONDUCTOR BASED ON NEC TABLE 250.122 - COPPER / GROUNDING ELECTRODE CONDUCTOR BASED ON NEC TABLE 250.66 - COPPER
3. CONDUCTOR SIZES BASED ON NEC TABLE 310.15 - COPPER 75°C.

FAULT CURRENT NOTE

XX,XXX — REPRESENTS THE AVAILIBLE FAULT CURRENT IN RMS SYMMETRICAL AMPS AT THE RESPECTIVE TRANSFORMER, PANEL, OR EQUIPMENT.

FAULT CURRENT CALCULATIONS ARE BASED ON AVAILABLE FAULT CURRENT OF 65,000 AT THE SECONDARY OF THE TRANSFORMER PROVIDED BY THE ELECTRIC UTILITY PROVIDER.

POWER PLAN NOTES

1. TRANSFORMER TO BE INSTALLED ABOVE NEW ELECTRICAL PANELS. PROVIDE SUPPORT AS PER NEC, MANUFACTURER'S REQUIREMENT AND LOCAL AHJ.

2. CONTRACTOR SHALL REMOVE ALL EXISTING UNDERSLAB WIRING AND CONDUITS FEEDING PANELS. ALL NEW WIRING SHALL BE FED TO PANELS FROM ABOVE.

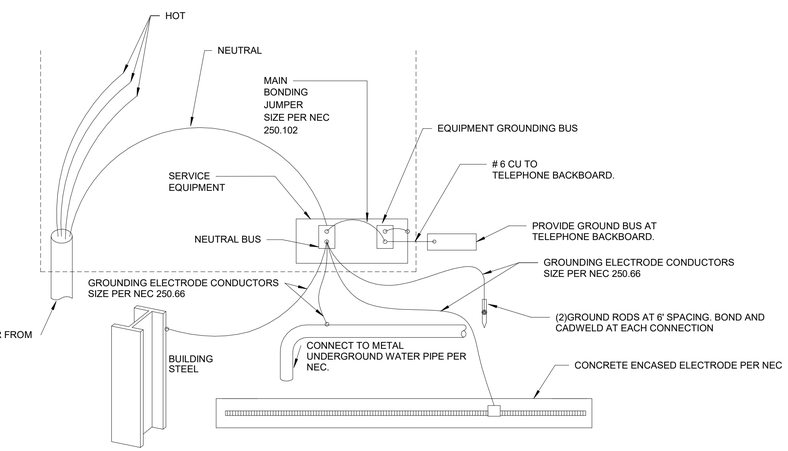

2 / E3.1 TYPICAL GROUNDING DETAIL
NTS

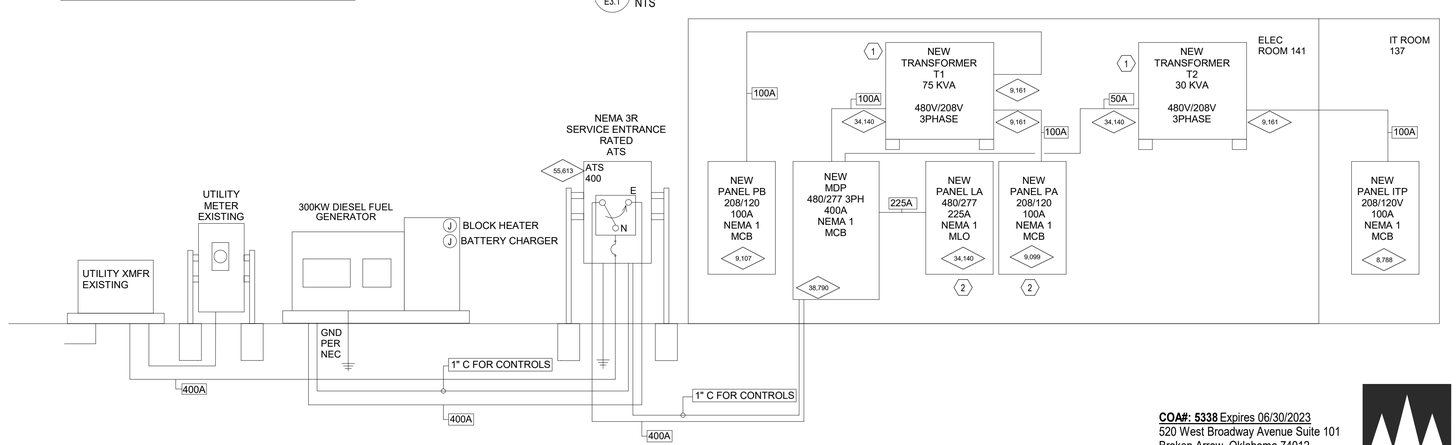

1 / E3.1 ELECTRICAL RISER DIAGRAM
1/8" = 1'-0"

COA#: 5338 Expires 06/30/2023
520 West Broadway Avenue Suite 101
Broken Arrow, Oklahoma 74012

918.895.6510 p
hpengineeringinc.com/

HP ENGINEERING

THE MCKINNEY PARTNERSHIP
architects

3600 West Main
Suite 200
Norman, Oklahoma
73072
405.360.1400 p
405.364.8287 f
tmparch.com

Copyright: ©2022 The McKinney Partnership Architects, P.C., All Rights Reserved

Seal:

11/18/22

Project:

City of Norman
Municipal Complex Renovation
Municipal Court
321 N. Webster Avenue
Norman, OK

Issue Date:
11/18/22 ISSUED FOR BIDDING

Revisions:

Project Number:
CM083319 (201253R)

Sheet Title:
ELECTRICAL RISER DIAGRAM

Sheet Number:
E3.1

Autodesk Docs://201188K Norman Courthouse/221188K CoN County Courthouse.rvt
11/18/2022 12:48:56 PM

PANELBOARD: LA

Location: ELEC ROOM 141
Supply From: MDP
Mounting: SURFACE
Enclosure: NEMA 1
Volts: 480Y/277
Phases: 3
Wires: 4
A.I.C. Rating: FULLY RATED (7)
Mains Type: MCB
Mains Rating: 225 A

Notes:

CKT	Circuit Description	Trip	Poles	Wire	A (kVA)		B (kVA)		C (kVA)		Wire	Poles	Trip	Circuit Description	CKT
1	SPARE	20	1	--	0.00	1.44						1	20	LIGHTING - COURT B	2
3	LIGHTING - LOBBY/WAITING 101	20	1				0.73	1.02				1	20	LIGHTING - RECEPTION	4
5	LIGHTING - CORR. 125	20	1						0.92	2.54		1	20	LIGHTING - COURT A	6
7	LIGHTING - N. OFFICES &...	20	1		1.62	0.00					--	1	20	SPARE	8
9	LIGHTING - JURY POOL	20	1				1.75	0.00			--	1	20	SPARE	10
11	SPARE	20	1	--					0.00	0.00	--	1	20	SPARE	12
13	LIGHTING - EXT (13)	20	1		0.23	0.00					--	1	20	SPARE	14
15	LIGHTING - EXT (13)	20	1				0.35	0.00			--	1	20	SPARE	16
17	SPARE	20	1	--					0.00	0.00	--	1	20	SPARE	18
19	SPARE	20	1	--	0.00	0.00					--	1	20	SPARE	20
21	SPARE	20	1	--			0.00	0.00			--	1	20	SPARE	22
23	SPARE	20	1	--					0.00	0.00	--	1	20	SPARE	24
25	SPARE	20	1	--	0.00	0.00					--	1	20	SPARE	26
27	SPARE	20	1	--			0.00	0.00			--	1	20	SPARE	28
29	SPARE	20	1	--					0.00	0.00	--	1	20	SPARE	30
31	SPARE	20	1	--	0.00	0.00					--	1	20	SPARE	32
33	SPARE	20	1	--			0.00	0.00			--	1	20	SPARE	34
35	SPACE	--	1	--					--	--	--	1	--	SPACE	36
37	SPACE	--	1	--	--	--					--	1	--	SPACE	38
39	SPACE	--	1	--			--	--			--	1	--	SPACE	40
41	SPACE	--	1	--					--	--	--	1	--	SPACE	42
		Total Load:			3287 VA		3846 VA		3459 VA						
		Total Amps:			11.9 A		14.0 A		12.6 A						

Legend:

Load Classification	Connected Load	Demand Factor	Demanded Load	Panel Totals	
Lighting	10592 VA	100.00%	10592 VA		
				Total Conn. Load:	10592 VA
				Total Feeder Load:	10592 VA
				Total Connected Current:	12.7 A
				Total Feeder Current:	12.7 A

Notes:
REFER TO PANELBOARD NOTES FOR ADDITIONAL INFORMATION.

PANELBOARD: PA

Location: ELEC ROOM 141
Supply From: T1
Mounting: SURFACE
Enclosure: NEMA 1
Volts: 208Y/120
Phases: 3
Wires: 4
A.I.C. Rating: FULLY RATED (7)
Mains Type: MCB
Mains Rating: 100 A

Notes:

CKT	Circuit Description	Trip	Poles	Wire	A		B		C		Wire	Poles	Trip	Circuit Description	CKT
1	RECEPTS - OFFICERS/WARRANTS...	20	1		1.08	0.72						1	20	RECEPTS - ASSOCIATE JUDGE 131	2
3	RECEPTS - JUVENILE COORD. 145	20	1				0.54	0.72				1	20	RECEPTS - ADMIN IV 129	4
5	RECEPTS - ADMIN TECH 144	20	1						0.90	0.72		1	20	RECEPTS - PROBATION OFFICER...	6
7	RECEPTS - SUPERVISOR 152	20	1		0.72	0.72						1	20	RECEPTS - RM-NM 151	8
9	RECEPTS - DEP. COURT CLERK 104	20	1				0.54	0.18				1	20	REFRIGERATOR- BR 137 (4)	10
11	RECEPTS - DEP. COURT CLERK 104	20	1						0.54	0.18		1	20	COFFEE-BR 137	12
13	RECEPTS - DEP. COURT CLERK 104	20	1		0.54	0.18						1	20	GARBAGE DISPOSAL - BR 137 (4)	14
15	RECEPTS - RECEPTIONIST 103	20	1				0.54	0.18				1	20	DISHWASHER - BR 137 (4)	16
17	RECEPTS - RECEPTIONIST 103	20	1						0.54	0.50		1	20	MICROWAVE - BR 137 (4)	18
19	RECEPTS - PAY STATION 105	20	1		0.54	0.54						1	20	EXTERIOR RECEPTACLES	20
21	RECEPTS - PAY STATION 105	20	1				0.36	0.54				1	20	RECEPTS - VESTIBULE 100	22
23	RECEPTS - PROSECUTOR 109	20	1						0.72	0.72		1	20	RECEPTS - SCREENING 107	24
25	RECEPTS - PROSECUTOR 110	20	1		0.72	0.18						1	20	COPIER RECEPTIONIST 103	26
27	RECEPTS - CONFERENCE 113	20	1				0.54	0.50				1	20	FLOOR BOX - COURT B	28
29	RECEPTS - CONFERENCE 115	20	1						0.54	0.72		1	20	RECEPTS - COURT A	30
31	RECEPTS - COURTROOM B 140	20	1		0.90	0.25						2	10	MCU-1	32
33	RECEPTS - MENTAL HEALTH...	20	1				0.72	0.25							34
35	RECEPTS - MEDIATION COORD. 134	20	1						0.72	0.36		1	20	EXTERIOR RECEPTACLES	36
37	RECEPTS - BAILIF/COURT...	20	1		0.54	0.46						1	20	EF-6	38
39	RECEPTS - BAILIF/COURT...	20	1				0.72	0.46				1	20	EF-7	40
41	RECEPTS - ADMIN JUDGE 133	20	1						0.90	0.25		2	20	EUH-1 FIRE SPRINKLER 123	42
43	RECEPT - COURT "A" 118	20	1		0.18	0.25									44
45	RECEPT - COURT "A" 118	20	1				0.18	0.50				1	20	DBLE INTRLCK ACT SYS - FS 123	46
47	UC FRIDGE - COFFEE 121 (4)	20	1						0.18	0.50		1	20	FACP	48
49	COUNTER RECEPT - COFFEE 121	20	1		0.18	0.00					--	1	20	(E) UH-1 (13)	50
51	COFFEE MAKER - COFFEE 121	20	1				0.50	0.36			--	1	20	SPARE	52
53	VAV BOX AND DAMPER (13)	20	1	--					0.60	0.60	--	1	20	VAV BOX AND DAMPER (13)	54
55	VAV BOX AND DAMPER (13)	20	1	--	0.60	0.60					--	1	20	VAV BOX AND DAMPER (13)	56
57	VAV BOX AND DAMPER (13)	20	1	--			0.60	0.60			--	1	20	VAV BOX AND DAMPER (13)	58
59	VAV BOX AND DAMPER (13)	20	1	--					0.60	0.60	--	1	20	VAV BOX AND DAMPER (13)	60
		Total Load:			9896 VA		9526 VA		11390 VA						
		Total Amps:			82.9 A		79.4 A		95.4 A						

Legend:

Load Classification	Connected Load	Demand Factor	Demanded Load	Panel Totals	
Other	500 VA	100.00%	500 VA		
Power	2040 VA	100.00%	2040 VA	**Total Conn. Load:**	30812 VA
Spare	5160 VA	100.00%	5160 VA	**Total Feeder Load:**	24256 VA
Receptacle	23112 VA	71.63%	16556 VA	**Total Connected Current:**	85.5 A
				Total Feeder Current:	67.3 A

Notes:
REFER TO PANELBOARD NOTES FOR ADDITIONAL INFORMATION.

PANELBOARD: ITP

Location: IT ROOM 137
Supply From: T2
Mounting: SURFACE
Enclosure: NEMA1
Volts: 208Y/120
Phases: 3
Wires: 4
A.I.C. Rating: Fully (7)
Mains Type: MAIN CB
Mains Rating: 100 A

Notes:

CKT	Circuit Description	Trip	Poles	Wire	A (kVA)		B (kVA)		C (kVA)		Wire	Poles	Trip	Circuit Description	CKT
1	RECEPT - IT 139	20	1		0.18	--					--	1	--	SPACE	2
3	RECEPT - IT 139	20	1				0.18	--			--	1	--	SPACE	4
5	RECEPT - IT 139	20	1						0.18	--	--	1	--	SPACE	6
7	RECEPT - IT 139	20	1		0.18	--					--	1	--	SPACE	8
9	DIRECT CONNECT - IT 139	20	2				0.25	--			--	1	--	SPACE	10
11									0.25	--	--	1	--	SPACE	12
13	RECEPTS AUDIO RM	20	1		0.36	--					--	1	--	SPACE	14
15	SPACE	--	1	--			--	--			--	1	--	SPACE	16
17	SPACE	--	1	--					--	--	--	1	--	SPACE	18
19	SPACE	--	1	--	--	--					--	1	--	SPACE	20
21	SPACE	--	1	--			--	--			--	1	--	SPACE	22
23	SPACE	--	1	--					--	--	--	1	--	SPACE	24
25	SPACE	--	1	--	--	--					--	1	--	SPACE	26
27	SPACE	--	1	--			--	--			--	1	--	SPACE	28
29	SPACE	--	1	--					--	--	--	1	--	SPACE	30
31	SPACE	--	1	--	--	--					--	1	--	SPACE	32
33	SPACE	--	1	--			--	--			--	1	--	SPACE	34
35	SPACE	--	1	--					--	--	--	1	--	SPACE	36
		Total Load:			720 VA		430 VA		430 VA						
		Total Amps:			6.0 A		3.6 A		3.6 A						

Legend:

Load Classification	Connected Load	Demand Factor	Demanded Load	Panel Totals	
Power	500 VA	100.00%	500 VA		
Receptacle	1080 VA	100.00%	1080 VA	**Total Conn. Load:**	1580 VA
				Total Feeder Load:	1580 VA
				Total Connected Current:	4.4 A
				Total Feeder Current:	4.4 A

Notes:
REFER TO PANELBOARD NOTES FOR ADDITIONAL INFORMATION.

PANELBOARD: PB

Location: ELEC ROOM 141
Supply From: T1
Mounting: SURFACE
Enclosure: NEMA 1
Volts: 208Y/120
Phases: 3
Wires: 4
A.I.C. Rating: FULLY RATED (7)
Mains Type: MCB
Mains Rating: 90 A

Notes:

CKT	Circuit Description	Trip	Poles	Wire	A (kVA)		B (kVA)		C (kVA)		Wire	Poles	Trip	Circuit Description	CKT
1	GLYCOL PUMP (13)	20	1		0.50	0.50						1	20	BOILER CIRC. PUMP 1/3HP (13)	2
3	CHRISTMAS LIGHTS (13)	20	1				0.50	0.50				1	20	VAV CONTROL POWER (13)	4
5	CHRISTMAS LIGHTS (13)	20	1						0.50	0.50		1	20	VAV CONTROL POWER (13)	6
7	CHRISTMAS LIGHTS (13)	20	1		0.50	0.50						1	20	CHRISTMAS LIGHTS (13)	8
9	CHRISTMAS LIGHTS & TIME CLK(13)	20	1				0.50	0.50				1	20	SPARE	10
11	BOILER CONTROLS & BURNER (13)	20	1						0.50	0.18		1	20	RECEPTS - PUBLIC RR 102	12
13	RECEPTS - COURT A 118	20	1		1.08	0.36						1	20	RECEPTS - MENS RR 117	14
15	RECEPTS - COURT A 118	20	1				0.36	0.18				1	20	RECEPTS - MENS RR 136	16
17	RECEPTS - COURT A 118	20	1						0.54	0.54		1	20	RECEPTS - COURT B 140	18
19	RECEPTS - COURT A 118	20	1		0.54	0.18						1	20	COPIER	20
21	RECEPTS - COURT A 118	20	1				0.36	1.04				1	20	RECEPTS - JURY POOL 108	22
23	RECEPTS - JURY 120	20	1						0.72	0.54		1	20	RECEPTS - WOMENS RR 111	24
25	RECEPTS - FIRE SPRINKLER	20	1		0.18	0.18						1	20	EWC (4)	26
27	RECEPTS - JURY POOL 108	20	1				0.54	0.18				1	20	RECEPT - TV CORR 101	28
29	RECEPTS - COURT A	20	1						0.90	0.72		1	20	RECEPTS - JURY POOL 108	30
31	RECEPTS - BREAKROOM 137	20	1		0.72	1.50						1	20	FLOOR BOXES - COURT A 118	32
33	RECEPTS - CONFERENCE 130	20	1				1.22	0.18				1	20	RECEPTS - HOLDING RR 150	34
35	RECEPTS - COURT ADMIN 126	20	1						1.40	0.45		2	20	BLOCK HEATER	36
37	RECEPT - ATM	20	1		0.36	0.45									38
39	RECEPTS - WOMENS RR 143	20	1				0.36	0.60				1	20	BATTERY CHARGER	40
41	RECEPTS JURY 120	20	1						0.86	0.18		1	20	GHW-1 (4)	42
		Total Load:			7550 VA		7020 VA		8530 VA						
		Total Amps:			63.6 A		58.5 A		71.8 A						

Legend:

Load Classification	Connected Load	Demand Factor	Demanded Load	Panel Totals	
Power	2900 VA	100.00%	2900 VA		
Lighting	4000 VA	100.00%	4000 VA	**Total Conn. Load:**	23100 VA
Receptacle	15200 VA	82.89%	12600 VA	**Total Feeder Load:**	20750 VA
Existing Load	1000 VA	125.00%	1250 VA	**Total Connected Current:**	64.1 A
				Total Feeder Current:	57.6 A

Notes:
REFER TO PANELBOARD NOTES FOR ADDITIONAL INFORMATION.

PANELBOARD NOTES (#)

1. TERMINATE GROUND ON ISOLATED GROUND BUS.
2. INSTALL LOCKING DEVICE FURNISHED WITH PANELBOARD (LOCK-OFF FOR MAINTENANCE).
3. INSTALL LOCKING DEVICE FURNISHED WITH PANELBOARD (LOCK-ON FOR CRITICAL LOAD).
4. GFI BREAKER FOR PERSONNEL PROTECTION (5mA).
5. GFI BREAKER FOR EQUIPMENT PROTECTION (30mA).
6. CONDUCTOR SIZE SHOWN IN PANEL SCHEDULE HAS BEEN INCREASED FOR VOLTAGE DROP. SIZE EQUIPMENT GROUND PROPORTIONALLY PER NEC. REFERENCE GROUND WIRE SIZING CHART.
7. REFER TO FAULT CURRENT SCHEDULE FOR AVAILABLE FAULT CURRENT FOR INTERRUPT RATINGS.
8. REFER TO ONE-LINE DIAGRAM FOR WIRE SIZES.
9. FACTORY WIRED TO LOAD.
10. THRU CONTROLLER. REFER TO LIGHTING CONTROLLER DETAIL.
11. ADD NEW CIRCUIT BREAKER TO EXISTING PANEL. NEW CIRCUIT BREAKER SHALL MATCH AIC RATING, MANUFACTURER, AND TYPE OF EXISTING CIRCUIT BREAKERS.
12. MATCH AIC RATING OF SERVICING DEVICE.
13. EXISTING MECHANICAL AND MECHANICAL EQUIPMENT SHALL BE RECONNECTED TO NEW PANEL. EXTEND EXISTING FEEDER TO NEW PANEL LOCATION WITH SAME SIZE CONDUIT AND CONDUCTORS AS EXISTING.

EQUIPMENT GROUNDING CONDUCTOR SIZING CHART

BRKR AMPS		WIRE SIZE				
15-20	PHASE	12	10	8	6	4
	GROUND	12	10	8	6	4
25-30	PHASE	10	8	6	4	3
	GROUND	10	8	6	4	3
35-50	PHASE	8	6	4	3	2
	GROUND	10	8	4	4	4
60	PHASE	6	4	3	2	1
	GROUND	10	6	6	4	4
70	PHASE	6	4	3	2	1
	GROUND	8	4	4	3	2
80-90	PHASE	4	3	2	1	1/0
	GROUND	8	6	4	4	3
100	PHASE	3	2	1	1/0	2/0
	GROUND	8	6	4	4	3

PER NEC 250.122(B)

COA#: 5338 Expires 06/30/2023
520 West Broadway Avenue Suite 101
Broken Arrow, Oklahoma 74012

918.895.6510 p
hpengineeringinc.com/

HP ENGINEERING

THE MCKINNEY PARTNERSHIP
architects

3600 West Main
Suite 200
Norman, Oklahoma
73072
405.360.1400 p
405.364.8287 f
tmparch.com

Copyright: ©2022 The McKinney Partnership Architects, P.C., All Rights Reserved

Seal:

LICENSED PROFESSIONAL ENGINEER
DAN MCDONOUGH
21299
OKLAHOMA
11/18/22
CA5338(PE)

Project:

City of Norman
Municipal Complex Renovation
Municipal Court
321 N. Webster Avenue
Norman, OK

Issue Date:
11/18/22 ISSUED FOR BIDDING

Revisions:

Project Number:
CM083319 (201253R)

Sheet Title:
ELECTRICAL SCHEDULES

Sheet Number:
E3.2

Autodesk Docs://201188K Norman Courthouse/221188K ColN County Courthouse.rvt
11/18/2022 12:48:59 PM

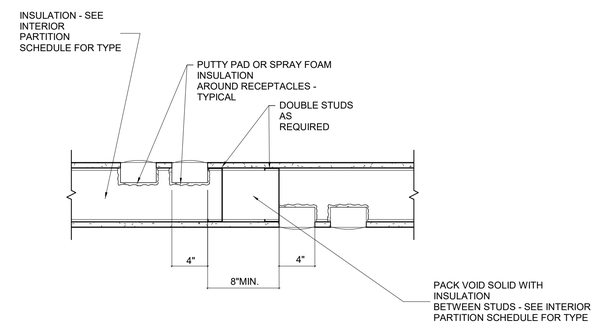

3 / E4.1 BACK TO BACK ELECTRICAL DEVICES DETAIL
1/8" = 1'-0"

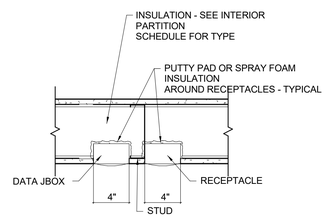

2 / E4.1 RECEPTACLE/DATA TYPICAL DETAIL
1/8" = 1'-0"

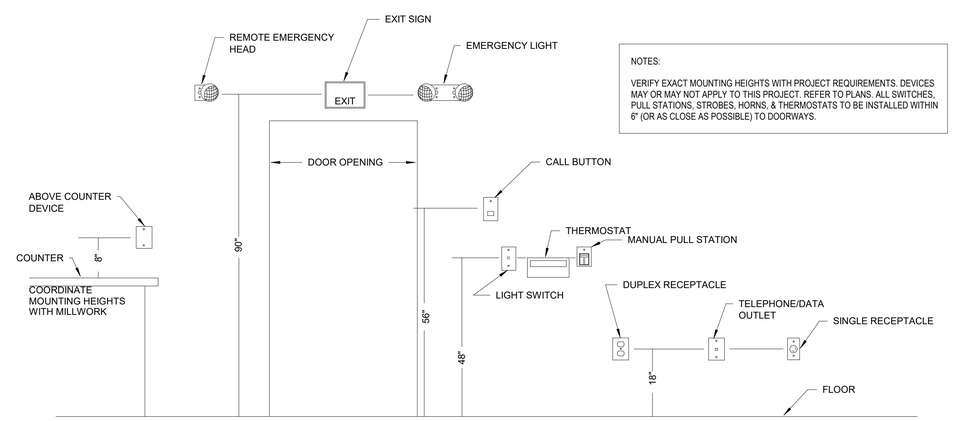

NOTES:

VERIFY EXACT MOUNTING HEIGHTS WITH PROJECT REQUIREMENTS. DEVICES MAY OR MAY NOT APPLY TO THIS PROJECT. REFER TO PLANS. ALL SWITCHES, PULL STATIONS, STROBES, HORNS, & THERMOSTATS TO BE INSTALLED WITHIN 6" (OR AS CLOSE AS POSSIBLE) TO DOORWAYS.

1 / E4.1 TYPICAL MOUNTING HEIGHT
NTS

COA#: 5338 Expires 06/30/2023
520 West Broadway Avenue Suite 101
Broken Arrow, Oklahoma 74012

918.895.6510 p
hpengineeringinc.com/

HP ENGINEERING

THE MCKINNEY PARTNERSHIP
architects

3600 West Main
Suite 200
Norman, Oklahoma
73072
405.360.1400 p
405.364.8287 f
tmparch.com

Copyright ©2022 The McKinney Partnership Architects, P.C., All Rights Reserved

Seal:

LICENSED PROFESSIONAL ENGINEER
DAN MCDONOUGH
21299
OKLAHOMA
11/18/22
CA5338(PE)

Project:

City of Norman
Municipal Complex Renovation
Municipal Court
321 N. Webster Avenue
Norman, OK

Issue Date:
11/18/22 ISSUED FOR BIDDING

Revisions:

Project Number:
CM083319 (201253R)

Sheet Title:
ELECTRICAL DETAILS

Sheet Number:
E4.1

Autodesk Docs://201188K Norman Courthouse/221188K CoN County Courthouse.rvt
11/18/2022 12:49:02 PM

FIRE ALARM LEGEND

	HORN AND VISUAL STROBE
	VISUAL STROBE
SD	SMOKE DETECTOR
H	HEAT DETECTOR
M	PULL STATION
FS	FLOW SWITCH
TS	TAMPER SWITCH
FACP	FIRE ALARM CONTROL PANEL
FAA	FIRE ALARM ANNUNCIATOR PANEL
MON	MONITOR MODULE

FIRE ALARM NOTES

1. THE ELECTRICAL CONTRACTOR SHALL ENGAGE A LICENSED FIRE ALARM CONTRACTOR TO PROVIDE A DESIGN FOR THE FIRE ALARM SYSTEM. THE ELECTRICAL CONTRACTOR SHALL INCLUDE IN THE BID A COMPLETE INSTALLED FIRE ALARM SYSTEM.

2. THE FIRE ALARM SYSTEM SHALL MEET OR EXCEED THE REQUIREMENTS OF NFPA 72 FOR VISUAL AND AUDIBLE NOTIFICATION. PROVIDE PLANS WITH THE REQUIRED dB LEVELS FOR APPROVAL BY THE FIRE MARSHALL. IF THE SHUTDOWN OF ANY EQUIPMENT IS REQUIRED, IT IS THE RESPONSIBILITY OF THE FIRE ALARM CONTRACTOR TO WORK WITH THE ELECTRICIAN TO ACCOMPLISH THE WORK AND INCLUDE THE PRICING FOR THE WORK IN THE BASE BID.

FIRE ALARM INSTALLATION NOTES

1. SYSTEM SHALL BE INSTALLED IN CONFORMANCE WITH NFPA 72 AND LOCAL CODES AND REGULATIONS. ALL EQUIPMENT AND MATERIALS SHALL BE UL LISTED AND APPROVED BY THE AUTHORITY HAVING JURISDICTION.

2. INTERFACE WITH AND MONITOR ALL FIRE SUPPRESSION SYSTEM DEVICES INCLUDING (BUT NOT LIMITED TO) SPRINKLER FLOW AND TAMPER SWITCHES.

3. WIRE AND CABLE SHALL BE UL LISTED AND LABELED AS COMPLYING WITH NFPA 70, ARTICLE 760. SIGNALING LINE CIRCUITS TO BE TWISTED, SHIELDED PAIR, SIZED AS RECOMMENDED BY SYSTEM MANUFACTURER. NON-POWER-LIMITED CIRCUITS TO BE SOLID-COPPER CONDUCTORS WITH 600-V RATED, 75 DEG C, COLOR-CODED INSULATION.
   9.1 LOW-VOLTAGE CIRCUITS: NO. 16 AWG, MINIMUM
   9.2 LINE-VOLTAGE CIRCUITS: NO. 12 AWG, MINIMUM

4. INSTALL AND TEST SYSTEMS ACCORDING TO NFPA 72. COMPLY WITH NECA 1.

5. TEST ALL SYSTEM DEVICES FOR PROPER OPERATION IN THE PRESENCE OF THE AHJ AND OTHER OFFICIALS INSPECTING THE FIRE ALARM SYSTEM.

6. IF REQUIRED BY THE LOCAL AHJ, EQUIPMENT DATA SHEETS AND BATTERY CALCULATIONS IN ACCEPTANCE WITH NFPA 72 SHALL BE PERFORMED BY THE FIRE ALARM SYSTEM MANUFACTURER/INSTALLER TO MATCH EQUIPMENT TO BE INSTALLED.

7. SYSTEM INSTALLER SHALL BE A LICENSED FIRE ALARM CONTRACTOR IN THE RESPECTIVE STATE OF THIS PROJECT.

8. FIRE ALARM CONTROL PANEL SHALL BE MODULAR, POWER-LIMITED DESIGN WITH ELECTRONIC MODULES, UL 864 LISTED, AND DESIGNED TO TRANSMIT ALARM, TROUBLE, AND SUPERVISORY SIGNALS TO A UL LISTED CENTRAL STATION THROUGH A DIGITAL ALARM COMMUNICATOR TRANSMITTER WITH (1) ETHERNET PORT CONNECTION.

9. PROVIDE 120VAC POWER THROUGH DEDICATED LOCKING BREAKER AT POWER PANEL.

10. GROUND THE FACP AND ALL ASSOCIATED CIRCUITS.

11. INSTALL A #6 AWG GROUND WIRE FROM THE TELE-COMMUNICATIONS EQUIPMENT GROUNDING POINT (IT 139) TO THE FACP (ELECTRIC 142).

12. SYSTEM SHALL INCLUDE 24V DC POWER SYSTEM WITH SEALED LEAD CALCIUM BATTERIES AND AUTOMATIC BATTERY CHARGER IN ACCORDANCE WITH NFPA 72.

13. PROVIDE (1) IP CONNECTION TO CUSTOMERS INTERNET NETWORK.

FIRE ALARM GENERAL NOTES

1. FIRE ALARM SYSTEM DESIGN, INSTALLATION AND MATERIALS SHALL BE IN ACCORDANCE WITH NFPA 70 AND NFPA 72. SYSTEM SHALL ALSO MEET ALL APPLICABLE BUILDING CODES, FIRE CODES AND THE REQUIREMENTS OF THE AUTHORITY HAVING JURISDICTION AND INSURANCE CARRIER. VERIFY REQUIREMENTS PRIOR TO BID SUBMITTAL.

2. INFORMATION ON CONTRACT DOCUMENTS IS GENERAL INFORMATION AND FOR BID PURPOSESONLY. PERFORM REQUIRED CALCULATIONS AND COORDINATE WITH OTHER TRADES. DEVIATIONS FROM ENGINEERS LAYOUT WILL NOT BE CONSIDERED UNLESS A FORMALLY SUBMITTED RFI IS RECEIVED AND APPROVED.

3. PROVIDE ADDITIONAL MATERIALS AND LABOR REQUIRED DUE TO LACK OF COORDINATION OR TO MEET AUTHORITY HAVING JURISDICTION AND INSURANCE CARRIER REQUIREMENTS AT NO ADDITIONAL COST TO THE OWNER.

4. PROVIDE ALL EQUIPMENT AND LABOR REQUIRED FOR A COMPLETE AND OPERATIONAL FIRE ALARM SYSTEM.

5. AUDIBLE NOTIFICATION DEVICES SHALL SOUND UNTIL SILENCED AT THE CONTROL PANEL OR REMOTE ANNUNCIATOR AS REQUIRED. VISUAL ALARM IS DISPLAYED UNTIL DEVICE IS RETURNED TO ITS NORMAL POSITION OR SUPERVISORY CONDITION IS CLEARED.

6. FORWARD COMPLETED FIRE ALARM CERTIFICATE OF COMPLETION TO THE OWNER.

7. REFER TO SPECIFICATIONS FOR ADDITIONAL INFORMATION.

8. PROVIDE CONNECTION TO EXTERIOR WATERFLOW ALARM BELL AS REQUIRED.

9. PROVIDE NOTIFICATION APPLIANCE CIRCUIT PANEL(S) TO POWER NOTIFICATION DEVICES AS REQUIRED. CONNECT TO FIRE ALARM SYSTEM.

10. THE FIRE ALARM CONTROL PANEL AND REMOTE ANNUNCIATOR LOCATIONS SHOWN SHALL BE COORDINATED WITH THE FIRE DEPARTMENT AND AHJ PRIOR TO INSTALLATION.

11. PROVIDE CONNECTION OF THE FIRE ALARM SYSTEM TO A UL LISTED CENTRAL STATION.

12. AIR HANDLING SYSTEMS THAT ARE MONITORED SHALL SHUTDOWN AND REMAIN DOWN UNTIL MANUALLY RESET.

13. PROVIDE NOTIFICATION, INITIATING AND MONITORING DEVICES AS INDICATED ON THE DRAWINGS. FIRE ALARM DEVICES SHALL BE OF ONE MANUFACTURER AND SHALL BE LISTED FOR USE WITH THE FIRE ALARM CONTROL PANEL.

FIRE ALARM DEVICE MOUNTING HEIGHTS
(PER NFPA 72)

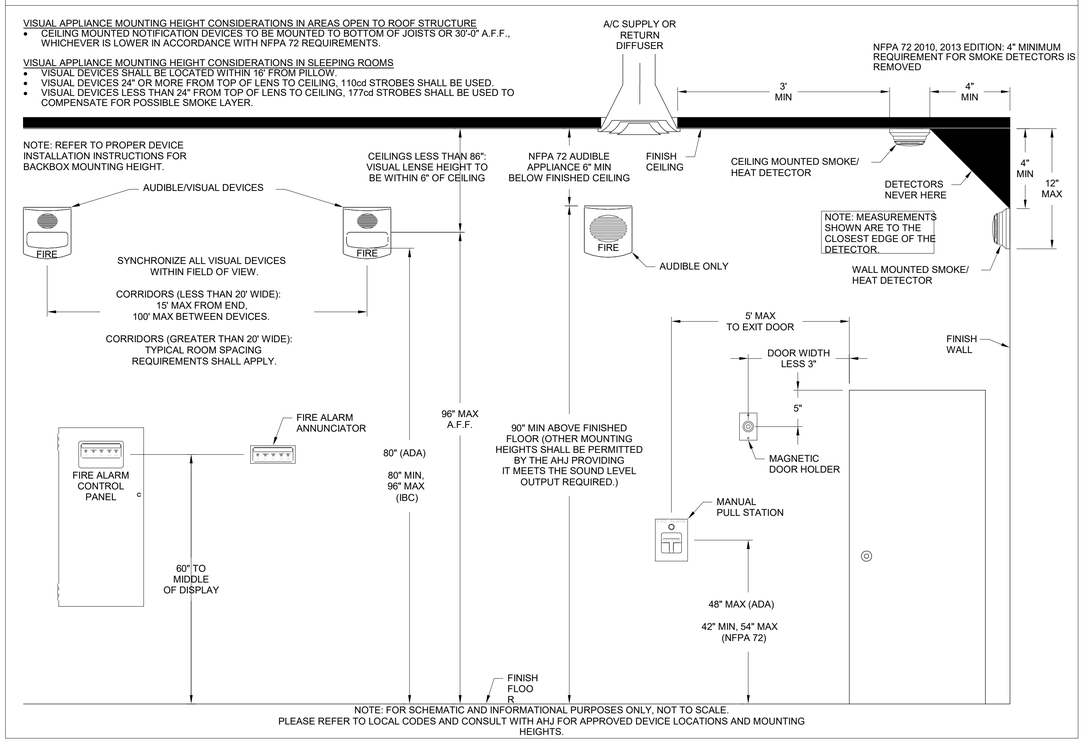

1 / E4.2 FIRE ALARM MOUNTING HEIGHTS
NTS

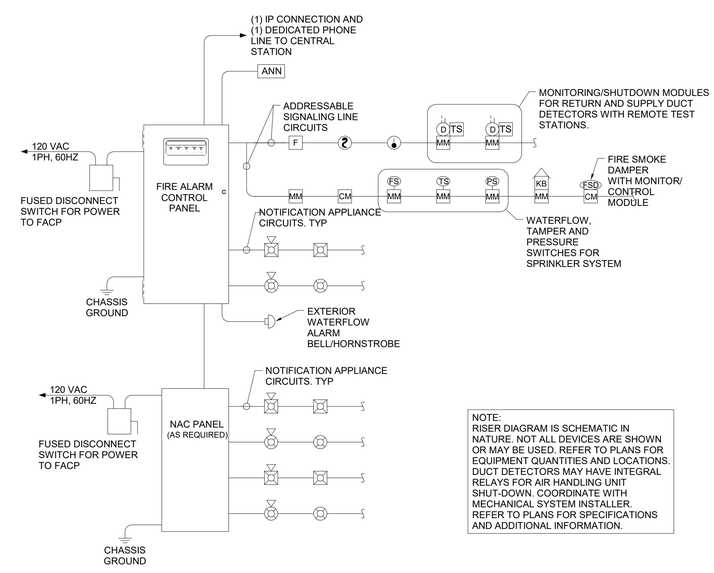

NOTE:
RISER DIAGRAM IS SCHEMATIC IN NATURE. NOT ALL DEVICES ARE SHOWN OR MAY BE USED. REFER TO PLANS FOR EQUIPMENT QUANTITIES AND LOCATIONS. DUCT DETECTORS MAY HAVE INTEGRAL RELAYS FOR AIR HANDLING UNIT SHUT-DOWN. COORDINATE WITH MECHANICAL SYSTEM INSTALLER. REFER TO PLANS FOR SPECIFICATIONS AND ADDITIONAL INFORMATION.

2 / E4.2 TYPICAL FIRE ALARM RISER DETAIL
NTS

CO#: 5338 Expires 06/30/2023
520 West Broadway Avenue Suite 101
Broken Arrow, Oklahoma 74012

918.895.6510 p
hpengineeringinc.com/

HP ENGINEERING

THE MCKINNEY PARTNERSHIP
architects

3600 West Main
Suite 200
Norman, Oklahoma
73072
405.360.1400 p
405.364.8287 f
tmparch.com

Copyright: ©2022 The McKinney Partnership Architects, P.C., All Rights Reserved

Seal:

LICENSED PROFESSIONAL ENGINEER
DAN MCDONOUGH
21299
OKLAHOMA
11/18/22
CA5338(PE)

Project:

City of Norman
Municipal Complex Renovation
Municipal Court
321 N. Webster Avenue
Norman, OK

Issue Date:
11/18/22 ISSUED FOR BIDDING

Revisions:

Project Number:
CM083319 (201253R)

Sheet Title:
FIRE ALARM

Sheet Number:
E4.2

Autodesk Docs://201188K Norman Courthouse/221188K CoN County Courthouse.rvt
11/18/2022 12:49:05 PM

GENERAL MECHANICAL SYMBOLS

- REVISION NUMBER - SHOWN ON PLANS
- POINT WHERE NEW CONNECTS TO EXISTING
- NUMBER OF DETAIL ON SHEET
- NUMBER OF SHEET WHERE DETAIL APPEARS
- KEYNOTE
- CONTINUATION SYMBOL
- Room 5 — ROOM NAME AND NUMBER
- ITEM TO BE DEMOLISHED
- AREA NOT IN CONTRACT
- 2" — PIPE SIZE TAG (DIAMETER)
- ABOVE GROUND PIPING
- 1/8" / 12" SLOPE — PIPE SLOPE TAG
- BELOW GROUND PIPING
- INVERT: -105' - 1" — PIPE INVERT ELEVATION TAG
- (E) — EXISTING PIPE TAG
- PIPING BEING DEMOLISHED

ABBREVIATIONS

Ø	ROUND	LVR	LOUVER
ABV	ABOVE	LWT	LEAVING WATER TEMPERATURE
AC	AIR CONDITIONING	M/A	MIXED AIR
AD	AREA DRAIN	MAX	MAXIMUM
ADD	ADDENDUM	MBH	ONE THOUSAND BTU PER HOUR
AFF	ABOVE FINISHED FLOOR	MCF	ONE THOUSAND CUBIC FEET
AFUE	ANNUAL FUEL UTILIZATION EFFICIENCY	MD	MOTORIZED DAMPER
ALT	ALTERNATE	MECH	MECHANICAL
AP	ACCESS PANEL	MFR	MANUFACTURER
ARCH	ARCHITECT/ARCHITECTURAL	MIN	MINIMUM
BFF	BELOW FINISHED FLOOR	MISC	MISCELLANEOUS
BLW	BELOW	MTR	MOTOR
BTU	BRITISH THERMAL UNITS	MU/A	MAKE-UP/AIR
BTUH	BRITISH THERMAL UNITS PER HOUR	NC	NOISE CRITERIA
CAP	CAPACITY	NC	NORMALLY CLOSED
CB	CATCH BASIN	NIC	NOT IN CONTRACT
CFM	CUBIC FEET PER MINUTE	NO	NUMBER
CLG	CEILING	NO	NORMALLY OPEN
CO	CLEAN OUT	NTS	NOT TO SCALE
CW	COLD WATER	O	OXYGEN
D	DEGREE	O/A	OUTSIDE AIR
DB	DRY BULB	ORD	OVERFLOW ROOF DRAIN
DIA	DIAMETER	PD	PRESSURE DROP
DN	DOWN	PIV	POST INDICATOR VALVE
DW	DISTILLED WATER	PLBG	PLUMBING
EA	EACH	PRESS	PRESSURE
EAT	ENTERING AIR TEMPERATURE	PRV	PRESSURE REDUCING VALVE
ELEC	ELECTRICAL	PSI	POUNDS PER SQUARE INCH
EQUIP	EQUIPMENT	PSIG	POUNDS PER SQUARE INCH GAUGE
EWC	ELECTRIC WATER COOLER	PWR	POWER
EWT	ENTERING WATER TEMPERATURE	R	DUCT RISER
E/A	EXHAUST AIR	R/A	RETURN AIR
EXIST	EXISTING	RCP	RADIANT CEILING PANEL
F	DEGREES FAHRENHEIT	RD	ROOF DRAIN
FCO	FLOOR CLEAN OUT	REC	RECESSED
FD	FLOOR DRAIN	RED	REDUCER
FDC	FIRE DEPARTMENT CONNECTION	RH	RELATIVE HUMIDITY
FL	FLOOR	RL/A	RELIEF AIR
FO	FUEL OIL	RM	ROOM
FOV	FUEL OIL VENT	RPM	REVOLUTIONS PER MINUTE
FOR	FUEL OIL RETURN	RW	RAIN WATER
FOS	FUEL OIL SUPPLY	SF	SQUARE FOOT
FPM	FEET PER MINUTE	S/A	SUPPLY AIR
FS	FLOOR SINK	SAN	SANITARY
FT	FOOT/FEET	SF	SQUARE FOOT
FTR	FIN TUBE RADIATION	SD	SMOKE DAMPER
GAL	GALLON	SM	SURFACE MOUNT
GF	GAS-FIRED	SP	STANDPIPE
GC	GENERAL CONTRACTOR	SP	STATIC PRESSURE
GPM	GALLONS PER MINUTE	STM	STEAM
GW	GREASE WASTE	T	THERMOSTAT
HB	HOSE BIB	TD	TEMPERATURE DROP
HP	HORSE POWER	TDR	TRENCH DRAIN
HTG	HEATING	TEMP	TEMPERATURE
HTR	HEATER	TYP	TYPICAL
HW	HOT WATER	UG	UNDERGROUND
HYD	HYDRANT	VAC	VACUUM
ID	INDIRECT	V	VENT
IN	INCH	VAV	VARIABLE AIR VOLUME
INV	INVERT	VENT	VENTILATION
LB	POUND	VTR	VENT THROUGH ROOF
LB/HR	POUNDS PER HOUR	W	WASTE
LAT	LEAVING AIR TEMPERATURE	WB	WET BULB
LP	LOW PRESSURE	WCO	WALL CLEAN OUT
LPG	LIQUEFIED PETROLEUM GAS	WH	WALL HYDRANT

EQUIPMENT ABBREVIATIONS

AC	AIR CONDITIONING UNIT	ET	EXPANSION TANK
ACCU	AIR COOLING CONDENSING UNIT	EWH	ELECTRIC WATER HEATER
AHU	AIR HANDLING UNIT	FCU	FAN COIL UNIT
AS	AIR SEPARATOR	FP	FIRE PUMP
B	BOILER	GI	GREASE INTERCEPTOR
CH	CHILLER	GRV	GRAVITY ROOF VENTILATOR
CT	COOLING TOWER	HWP	HEATING WATER PUMP
CUH	CABINET UNIT HEATER	HRU	HEAT RECOVERY UNIT
CHWP	CHILLED WATER PUMP	PRV	POWER ROOF VENTILATOR
DBP	DOMESTIC WATER BOOSTER PUMP	RE	RETURN/EXHAUST FAN
DC	DUCT MOUNTED COIL	RTU	ROOFTOP UNIT
DCP	DOMESTIC WATER CIRCULATING PUMP	SP	SUMP PUMP
EF	EXHAUST FAN	UH	UNIT HEATER
EDC	ELECTRIC DUCT COIL	WH	WATER HEATER

PLUMBING AND PIPING SYMBOLS

CHWR	CHILLED WATER RETURN
CHWS	CHILLED WATER SUPPLY
CD	CONDENSATE DRAINAGE
CWR	CONDENSER WATER RETURN
CWS	CONDENSER WATER SUPPLY
GWR	GEOTHERMAL WATER RETURN
GWS	GEOTHERMAL WATER SUPPLY
HWR	HEATING WATER RETURN
HWS	HEATING WATER SUPPLY
G	NATURAL GAS
PG	PROPANE GAS
REF-L	REFRIGERANT-LIQUID
REF-S	REFRIGERANT-SUCTION
REF-HG	REFRIGERANT-HOT GAS
STM	STEAM
CDR	CONDENSATE RETURN
CWV	COMBINATION WASTE & VENT
CA	COMPRESSED AIR
CW	DOMESTIC COLD WATER
H-CW	HARD COLD WATER
S-CW	SOFT COLD WATER
F-CW	FILTERED COLD WATER
RO	REVERSE OSMOSIS WATER
HW	HOT WATER
HW-140°	HOT WATER 140°
HW-R	HOT WATER RECIRCULATION
HW-R-140°	HOT WATER RECIRCULATION 140°
GV	GREASE VENT
GW	GREASE WASTE
IW	INDIRECT WASTE
OV	OIL VENT
OW	OIL WASTE
PD	PUMP DISCHARGE
V	SANITARY VENT
SS	SANITARY SEWER
SHWR	SOLAR HOT WATER RETURN
SHWS	SOLAR HOT WATER SUPPLY
SD	STORM DRAINAGE
OSD	OVERFLOW STORM DRAINAGE

PIPE DROP
PIPE RISE
PIPE TEE
CAP
4"
2"
PLUG
4"
REDUCING 45 DEGREE TEE
45 DEGREE TEE

PIPE ACCESSORY TAGS

- WM — 2" DOM. WM DOMESTIC WATER METER
- 2" BALANCING BALANCING VALVE
- 2" SHUTOFF 1/4 TURN BALL VALVE
- 2" CHECK CHECK VALVE
- 2" TMV 3-WAY MIXING VALVE
- GATE VALVE
- P — 3-WAY AIRMOTOR CONTROLLER
- ANGLE GLOBE VALVE
- GATE VALVE
- DIAPHRAGM VALVE
- GLOBE VALVE
- HOSE GLOBE VALVE
- M — 2" M-CNTRL MOTORIZED CONTROL VALVE
- M — 2" 3-WAY CNTRL 3 WAY MOTORIZED CONTROL VALVE
- 2" PRV PRESSURE REDUCING VALVE
- S — 3/8" SOLENOID REFRIGERANT SOLENOID VALVE
- 2" BUTTERFLY BUTTERFLY VALVE
- LOCK SHIELD VALVE
- NEEDLE VALVE
- GATE VALVE
- QUICK OPENING VALVE
- SPRING CHECK VALVE
- SWING GATE CHECK VALVE
- TEMP PRESSURE RELIEF VALVE

DRAIN TAGS

DRAIN SIZE

FLOOR DRAIN	4" FD-1	TYPE (SEE SCHEDULE)	4" AD-6 — AREA DRAIN
FLOOR DRAIN	4" FD-3P	"P" - INDICATES PRIMER CONNECTION	4" SD-29 — DECK DRAIN
FLOOR SINK	4" FS-4		4" SD-12 — FLOW CONTROL DRAIN
HUB DRAIN	4" FD-13	FIXTURE UNITS	4" RD-1 — STORM DRAIN
		ROOF AREA SERVED BY DRAIN	6" SD-1, 4000 SF — COMBINATION DRAINS

PLUMBING FIXTURE TAGS

TYPE (SEE SCHEDULE) — HL-a
FIXTURE UNITS — 0.75 CWFU, 0.75 HWFU
WATER CLOSET - WALL HUNG - ADA — HL-a, 1 DFU
PIPE ACCESORY TAG — HWC-2, HWC-X, UR-1
4" WCO — 4" WCO

* NOTE *
ALL OF GENERAL NOTES ON THIS SHEET ARE TO BE APPLIED TO ALL OTHER DRAWINGS IN THIS SET.THE SYMBOLS AND ABBREVIATIONS SHOWN ON THIS SHEET MAY OR MAY NOT BE USED IN THIS SET OF DRAWINGS.

GENERAL PLUMBING NOTES

1. THE ENTIRE PLUMBING SYSTEM SHALL BE IN ACCORDANCE WITH THE LATEST EDITION OF THE INTERNATIONAL/ARKANSAS PLUMBING CODE REGULATIONS AND LOCAL PLUMBING INSPECTOR.
2. IT IS THE PLUMBING CONTRACTOR'S RESPONSIBILITY TO CORRDINATE WITH THE SITE CONTRACTOR TO CONFIRM THAT THE INVERT AND LOCATION OF THE SANITARY SERVICE IS COMPATIBLE WITH THE SITE UTILITIES PRIOR TO BEGINNING WORK.
3. THE PIPING INDICATED ON THESE PLANS ARE DIAGRAMMATICAL. ALL WORK SHALL BE COORDINATED WITH ALL OTHER TRADES PRIOR TO INSTALLATION. CONTRACTOR SHALL COORDINATE ROUTING OF ALL PIPING WITH EXISTING CONDITIONS AND SHALL PROVIDE ANY NECESSARY OFFSETS, REROUTING, TEES, ELBOWS, ETC. REQUIRED FOR A COMPLETE AND COORDINATED INSTALLATION.
4. THE CONTRACTOR SHALL OBTAIN AND PAY ALL FEES RELATED TO PERMITTING, INSPECTIONS, TAP-ON FEES, ETC.
5. THE CONTRACTOR SHALL COORDINATE ANY PLUMBING OR PIPING SYSTEM SHUTDOWN WITH THE OWNER 48 HOURS IN ADVANCE.
6. CONTRACTOR SHALL COORDINATE AND PROVIDE ALL NECESSARY PIPING & PLUMBING FITTINGS, PIPING. MISCELLANEOUS ITEMS REQUIRED FOR A COMPLETE INSTALLATION OF ALL PLUMBING RELATED ITEMS.
7. DOMESTIC WATER AND SEWER LOCATED OUTSIDE OF FOOTING SHALL MAINTAIN A MINIMUM OF 10' SEPARATION UNLESS WRITTEN PERMISSION IS OBTAINED FROM LOCAL AUTHORITIES AND/OR PROPER CONTAMINATION PROVISIONS PER LOCAL CODE HAVE BEEN MET.
8. ALL DOMESTIC WATER, NATURAL GAS, DEIONIZED WATER, CARBON DIOXIDE, COMPRESSED AIR, AND NITROGEN PIPING SHOWN IS ABOVE CEILING, EXPOSED OVERHEAD, AND WITHIN WALLS UNLESS OTHERWISE NOTED. WATER HAMMER ARRESTORS SHALL BE INSTALLED AT DISHWASHERS, WASHING MACHINES, SUPPLY BOXES, AND QUICK CLOSING VALVES NOT LISTED. INSTALL WHA-1 AS CLOSE TO QUICK CLOSING VALVE AS POSSIBLE PER MANUFACTURER'S RECOMMENDATIONS. ISOLATION VALVES SHALL BE INSTALLED ON ALL SUPPLY FIXTURE GROUPS AND HOT WATER BALANCING VALVES.
9. ALL SANITARY, GREASE, LAB, AND ACID WASTE PIPING SHOWN IS BELOW SLAB, BELOW FLOOR, OR WITHIN WALLS UNLESS OTHERWISE NOTED. ALL SANITARY VENT PIPING SHOWN IS ABOVE CEILING, EXPOSED OVERHEAD, OR WITHIN WALLS UNLESS OTHERWISE NOTED.
10. FROST PROOF HOSE BIBBS AND SUPPLY PIPING SHALL BE INSTALLED ON THE INSIDE OF THE INSULATION. SEAL SHEATHING PENETRATION TO PREVENT AIR FROM REACHING THE VALVE.
11. FLOOR DRAIN CONNECTION SIZE TO BE THE SAME SIZE AS THE DRAIN LINE IT CONNECTS UNLESS NOTED OTHERWISE. IF SIZE IS NOT INDICATED ON DRAWINGS REFER TO PLUMBING ROUGH-IN SCHEDULE FOR PROPER SIZE.
12. FLUSH CONTROLS FOR HANDICAPPED WATER CLOSETS ARE TO BE MOUNTED TO THE OPEN SIDE OF THE TOILET AREAS.
13. THE CONTRACTOR SHALL COORDINATE THE INSTALLATION OF ALL UNDER SLAB PIPING WITH EXISTING STRUCTURAL FOUNDATIONS. UNDERGROUND UTILITY LOCATIONS SHALL BE VERIFIED PRIOR TO ANY WORK BEING PERFORMED. CONTRACTOR SHALL REPAIR OR REPLACE ALL PIPING NOT IN PROPER WORKING ORDER OR DAMAGED DURING INSTALLATION OF THE NEW UNDERGROUND PIPING.
14. ALL PIPING PENETRATIONS THROUGH NEW, EXISTING WALL, OR FLOOR SHALL BE SEALED TO EQUAL THE RATING OF THE NEW, EXISTING WALL OR FLOOR.
15. THE PLUMBING SYSTEM SHALL BE TESTED AS REQUIRED BY LOCAL CODE OR BY THE REQUIREMENTS OF THE LOCAL PLUMBING INSPECTOR.
16. THE ENTIRE DOMESTIC WATER SYSTEM (EXISTING/NEW) SHALL BE DISINFECTED IN ACCORDANCE TO THE LOCAL CODE & HEALTH DEPARTMENT REQUIREMENTS.
17. FINISHED FLOOR ELEVATION (F.F.E.) SHALL BE 0.00' FOR CALCULATION PURPOSES ONLY, UNLESS NOTED OTHERWISE.
18. THE BACKFLOW PREVENTION DEVICE SHALL BE INSTALLED PER LOCAL CODE & PER AUTHORITY HAVING JURISDICTION REQUIREMENTS. NON-LEAD TYPE ONLY.
19. ALL PIPING ON ROOF SHALL BE ANCHORED TO STEEL RIB FASTENERS APPROVED BY THE ROOF MANUFACTURER. INSTALL ANCHORS PER MANUFACTURERS RECOMMENDATION.
20. ALL PLUMBING & PIPING SYSTEMS SHALL BE SUPPORTED AS REQUIRED BY THE LOCAL CODE REQUIREMENTS AND PER MANUFACTURER'S RECOMMENDATIONS.
21. REUSE EXISTING VENTS THRU ROOF AS SHOWN. ALL VENT THRU ROOF (VTR'S) PENETRATIONS INDICATED ON PLANS ARE PRELIMINARY. FINAL LOCATIONS SHALL BE COORDINATED WITH ALL TRADES. ALL VTR'S SHALL BE A MINIMUM OF 10'-0" FROM ALL FRESH AIR INTAKE OPENINGS.
22. ANY PVC PIPE PENETRATING A FIRE RATED ASSEMBLY SHALL BE EXTERNALLY SLEEVED WITH STEEL, FERROUS, OR COPPER MATERIALS, SECURELY FASTENED TO THE FIRE RATED ASSEMBLY. ANY SPACE BETWEEN THE SLEEVE AND THE FIRE RATED ASSEMBLY PENETRATED SHALL BE PROTECTED USING MATERIAL THAT CONFORMS TO ASTM E 814 OR UL 1479, SUCH AS FIRE STOP FS-1900 OR FLAME STOPPER 5000.
23. CONTRACTOR SHALL MAKE ALL FINAL CONNECTIONS FOR DISHWASHER, WASHING MACHINE, REFRIGERATOR, ETC.
24. PROVIDE SHUT-OFF VALVES FOR PROPER OPERATION AND SERVICING OF DOMESTIC WATER DISTRIBUTION SYSTEM. LOCATION SHALL INCLUDE BUT NOT BE LIMITED TO THE FOLLOWING: AT EACH FIXTURE GROUP, AT EACH BRANCH TAKE-OFF FROM MAINS AND AT THE BASE OF EACH RISER. COORDINATE WITH ARCHITECTURAL PLAN FOR ACCESS DOOR LOCATIONS.
25. TEMPERED WATER, NOT EXCEEDING A MAXIMUM OF 110° F, SHALL BE DELIVERED FROM PUBLIC HANDWASHING FACILITIES THROUGH AN APPROVED WATER TEMPERATURE LIMITING DEVICE THAT CONFORMS TO ASSE 1070.
26. VALVES SHALL BE LOCATED 6" ABOVE ACCESSIBLE CEILING WHEN AT ALL POSSIBLE AND SHALL BE CLEAR OF ANY OBSTRUCTIONS FROM OTHER TRADES. MAINTENANCE SHALL BE ABLE TO ACCESS VALVES WITH STANDARD LADDER. SHOULD LOCATION NOT BE APPLICABLE CONTRACTOR SHALL PROVIDE A CONTROL CHAIN AND/OR ARM.
27. REGULATORS INSTALLED ON THE INTERIOR OF THE BUILDING SHALL BE VENTED TO THE EXTERIOR PER LOCAL AND STATE CODES.
28. IT IS THE PLUMBING CONTRACTOR'S RESPONSIBILITY TO COORDINATE WITH THE SITE CONTRACTOR TO CONFIRM THAT THE INVERTS AND LOCATIONS OF THE BUILDING UTILITIES ARE COMPATABLE WITH THE SITE UTILITIES PRIOR TO BEGINNING WORK.
29. CONTRACTOR SHALL PROVIDE A PRESSURE REDUCING VALVE (PRV-1) SHOULD THE WATER PRESSURE EXCEED 75 PSI. CONTRACTOR SHALL CONFIRM WITH ON SITE CONDITIONS AND LOCAL UTILITY.
30. PROVIDE BALANCING VALVES FOR PROPER OPERATION AND PRESSURE OF DOMESTIC WATER DISTRIBUTION SYSTEM. LOCATION SHALL INCLUDE BUT NOT BE LIMITED TO THE FOLLOWING: AT EACH FIXTURE GROUP, AT EACH BRANCH TAKE-OFF FROM MAINS AND AT THE EACH RISER. INSTALL PER MANUFACTURE'S REQUIREMENTS.
31. PROVIDE DRAIN PANS FOR ANY WATER PIPING CROSSING OVER IT ROOM 139 OR A/V 119. ROUTE DRAIN PAN(S) TO NEAREST APPROVED WASTE RECEPTICAL.
32. ANY LINE VOLTAGE WIRING THAT IS RUN BY THE PLUMBING CONTRACTOR SHALL BE INSTALLED IN ACCORDANCE WITH THE ELECTRICAL PLANS, NOTES, AND SPECIFICATIONS. COORDINATE WITH ELECTRICAL CONTRACTOR ON SITE.
33. INSULATION JACKET SHALL BE PROVIDED WHEN PIPING INSULATION IS EXPOSED.
34. THE PLUMBING CONTRACTOR SHALL INSPECT EXISTING CONDITIONS PRIOR TO BEGINNING WORK. FIELD VERIFY SIZE AND LOCATION OF ALL EXISTING SERVICES TO BE TIED INTO.
35. CAMERA SURVEY ALL EXISTING SANITARY SEWER LOCATIONS AND INVERTS BELOW SLAB OR GRADE. NOTIFY GENERAL CONTRACTOR OF ANY POTENTIAL CONFLICTS WITH WORK PRIOR TO BEGINNING CONSTRUCTION.
36. THE EXISTING PIPING INDICATED ON THESE PLANS SHALL BE VERIFIED IN THE FIELD FOR EXACT LOCATIONS, QUANTITY, AND PIPE SIZES.

GENERAL PLUMBING SEISMIC NOTES

1. PROVIDE VIBRATION AND SEISMIC CONTROLS FOR FIRE-SUPPRESSION PIPING AND EQUIPMENT FOR DEVICES FOR FIRE-SUPPRESSION EQUIPMENT AND SYSTEMS.
2. PROVIDE VIBRATION AND SEISMIC CONTROLS FOR PLUMBING PIPING AND EQUIPMENT.
3. COORDINATE ALL VIBRATION ISOLATION DEVICE INSTALLATION AND SEISMIC BRACING FOR PLUMBING PIPING AND EQUIPMENT WITH OTHER SYSTEMS AND EQUIPMENT IN THE VICINITY, INCLUDING OTHER SUPPORTS AND RESTRAINTS, IF ANY.
4. TESTING AGENCY QUALIFICATIONS: AN INDEPENDENT AGENCY, WITH THE EXPERIENCE AND CAPABILITY TO CONDUCT THE TESTING INDICATED, THAT IS AN NRTL AS DEFINED BY OSHA IN 29 CFR 1910.7 AND THAT IS ACCEPTABLE TO AUTHORITIES HAVING JURISDICTION.
5. COMPLY WITH SEISMIC-RESTRAINT REQUIREMENTS IN THE INTERNATIONAL BUILDING CODE
6. WELDING QUALIFICATIONS: QUALITY PROCEDURES AND PERSONNEL ACCORDING TO AWS D1.1/D1.1M, "STRUCTURAL WELDING CODE-STEEL."
7. SEISMIC-RESTRAINT DEVICES SHALL HAVE HORIZONTAL AND VERTICAL LOAD TESTING AND ANALYSIS AND SHALL BEAR ANCHORAGE PRE-APPROVAL OPA NUMBER FROM OSHPD, PRE-APPROVAL BY ICC-ES, OR PRE-APPROVAL BY ANOTHER AGENCY ACCEPTABLE TO AUTHORITIES HAVING JURISDICTION, SHOWING MAXIMUM SEISMIC-RESTRAINT RATINGS. RATINGS BASED ON INDEPENDENT TESTING ARE PREFERRED TO RATINGS BASED ON CALCULATIONS. IF PRE-APPROVED RATINGS ARE UNAVAILABLE, SUBMITTALS BASED ON INDEPENDENT TESTING ARE PREFERRED. CALCULATIONS (INCLUDING COMBINING SHEAR AND TENSILE LOADS) TO SUPPORT SEISMIC-RESTRAINT DESIGNS MUST BE SIGNED AND SEALED BY A QUALIFIED PROFESSIONAL ENGINEER.
8. SEISMIC RESTRAINTS FOR MEP EQUIPMENT AND SYSTEMS
9. BUILDING IS CLASSIFIED AS SEISMIC DESIGN CATEGORY C. CONTRACTOR SHALL PROVIDE SEISMIC BRACING FOR PIPING, DUCTWORK AND EQUIPMENT TO MEET ALL LOCAL AND NATIONAL CODE REQUIREMENTS.
10. CONTRACTOR'S RESPONSIBILITIES INCLUDE PROVIDING ALL SUBMITTAL'S AND DETAILS WITH STRUCTURAL ENGINEER'S CERTIFICATION FOR PERMITTING.
11. SIESMIC PROTECTION FOR CONCERNS OF ALL BUILDING SYSTEMS INCLUDING BUT NOT LIMITED TO MECHANICAL, PLUMBING, AND ELECTRICAL MUST MEET MINIMUM REQUIREMENTS OF ALL APPLICABLE CODES FOR BUILDINGS' CLASSIFIED SEISMIC PROTECTION MEASURES TO BE APPLIED SHALL BE INSTALLED IN STRICT ACCORDANCE WITH ALL APPLICABLE LOCAL, STATE, AND/OR FEDERAL CODES AND WITH MANUFACTURERS'S REQUIREMENTS, THE MOST STRINGENT SHALL APPLY

PLUMBING SHEET INDEX

P0.1	PLUMBING LEGENDS AND ABBREVIATIONS
P1.1	PLUMBING WASTE & VENT PLAN
P2.1	PLUMBING SUPPLY PLAN
P3.1	ENLARGEMENTS - PLUMBING
P4.1	DETAILS - PLUMBING
P4.2	DETAILS - PLUMBING
P6.1	PLUMBING SCHEDULES

THE MCKINNEY PARTNERSHIP
architects

3600 West Main
Suite 200
Norman, Oklahoma
73072
405.360.1400 p
405.364.8287 f
tmparch.com

Copyright © 2022 The McKinney Partnership Architects, P.C., All Rights Reserved

Seal:

LICENSED PROFESSIONAL ENGINEER
Nic Millard
23394
OKLAHOMA
11/18/22

Project:

City of Norman
Municipal Complex Renovation
Municipal Court

321 N. Webster Avenue
Norman, OK

Issue Date:
11/18/22 ISSUED FOR BIDDING

Revisions:

Project Number:
CM083319 (201253R)

Sheet Title:
PLUMBING LEGENDS AND ABBREVIATIONS

Sheet Number:
P0.1

COA#: 5338 Expires 06/30/2023
520 West Broadway Avenue Suite 101
Broken Arrow, Oklahoma 74012

918.895.6510 p
hpengineeringinc.com/

HP ENGINEERING

Autodesk Docs://201188K Norman Courthouse/221188K CoN County Courthouse.rvt
11/18/2022 5:35:29 PM

KEYNOTES

1. TWO WAY CLEANOUT SHALL REMAIN AS EXISTING
2. REMOVE SANITARY AND VENT PIPING BACK TO MAIN AND CAP. EXISTING FCO AND SANITARY PIPING BELOW GRADE SHALL BE ABANDONED IN PLACE.
3. ROOF DRAIN IS TO REMAIN AS EXISTING. ROUTE NEW ROOF DRAIN PIPING AS SHOWN AND CONNECT TO EXISTING.
4. SAWCUT FLOOR TO CONNECT NEW SS PIPING TO EXISTING SS PIPING OF EQUAL OR LARGER SIZE IN APPROXIMATE LOCATION. FIELD VERIFY EXISTING PIPE SIZE AND LOCATION.
5. PROVIDE 2-WAY CLEANOUT WITH APPROXIMATELY 2'-6" INVERT ELEVATION. ROUTE APPROXIMATELY 60 FEET OF SANITARY PIPING TO SITE EXISTING SANITARY SEWER SYSTEM.

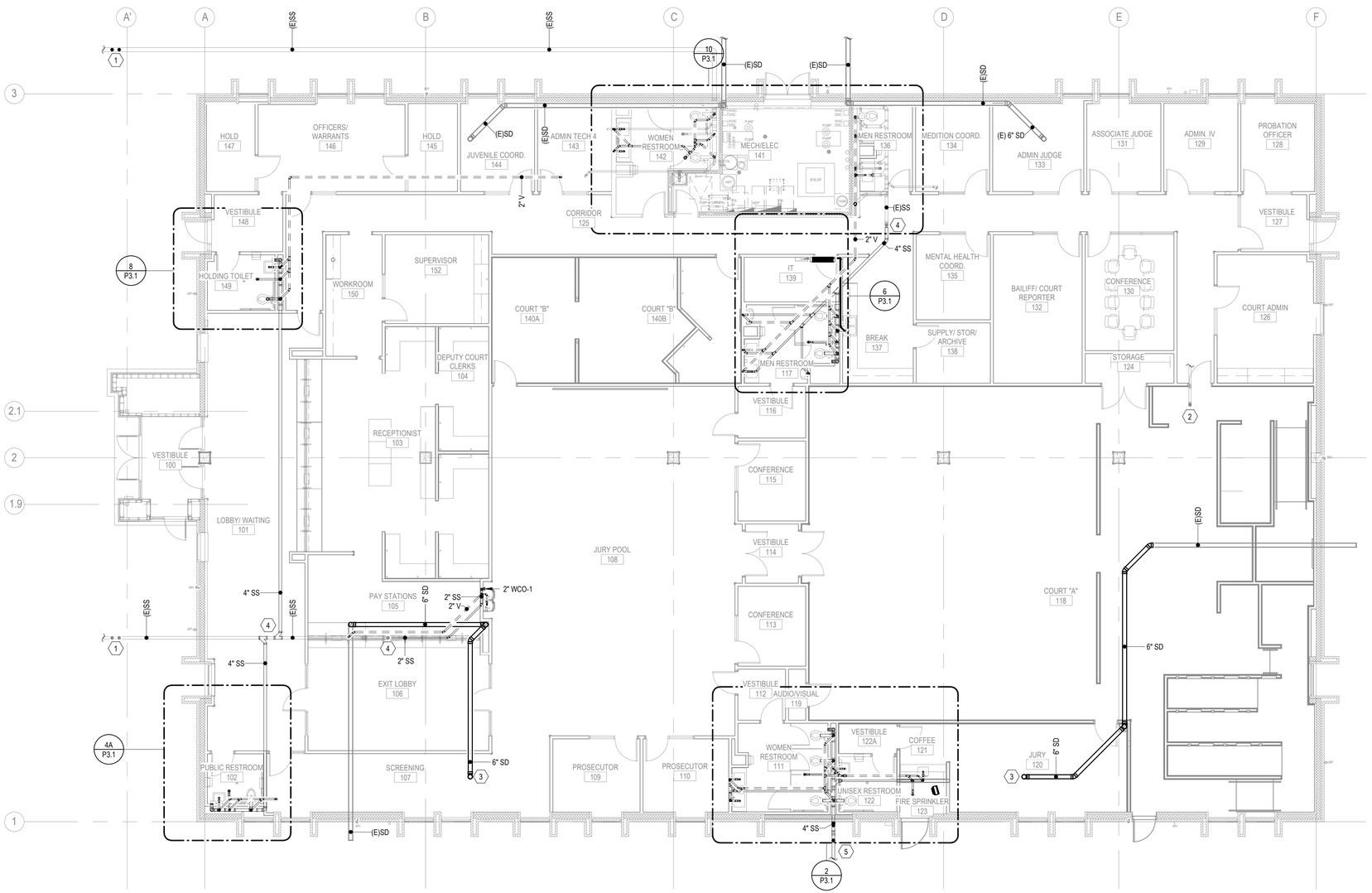

1 P1.1 PLUMBING WASTE AND VENT PLAN
1/8" = 1'-0"

THE MCKINNEY PARTNERSHIP
architects

3600 West Main
Suite 200
Norman, Oklahoma
73072
405.360.1400 p
405.364.8287 f
tmparch.com

Copyright © 2022 The McKinney Partnership Architects, P.C., All Rights Reserved

Seal:

PROFESSIONAL ENGINEER
Nic Millard
23394
OKLAHOMA
11/18/22

Project:

City of Norman
Municipal Complex Renovation
Municipal Court
321 N. Webster Avenue
Norman, OK

Issue Date:
11/18/22 ISSUED FOR BIDDING

Revisions:

Project Number:
CM083319 (201253R)

Sheet Title:
PLUMBING WASTE & VENT PLAN

Sheet Number:
P1.1

COA#: 5338 Expires 06/30/2023
520 West Broadway Avenue Suite 101
Broken Arrow, Oklahoma 74012

918.895.6510 p
hpengineeringinc.com/

HP ENGINEERING

Autodesk Docs://201188K Norman Courthouse/221188K CoN County Courthouse.rvt
11/18/2022 5:35:34 PM

KEYNOTES

1. EXISTING DOMESTIC WATER SERVICE IS TO REMAIN AS EXISTING. DEMOLISH EXISTING DOMESTIC WATER PIPING AND ROUTE PIPING FROM MECHANICAL ROOM AS SHOWN.
2. WALL HYDRANT TO REMAIN.
3. DEMO WALL HYDRANTS, DEMO EXISTING WATER LINE BACK TO MAIN AND CAP AT MAIN.

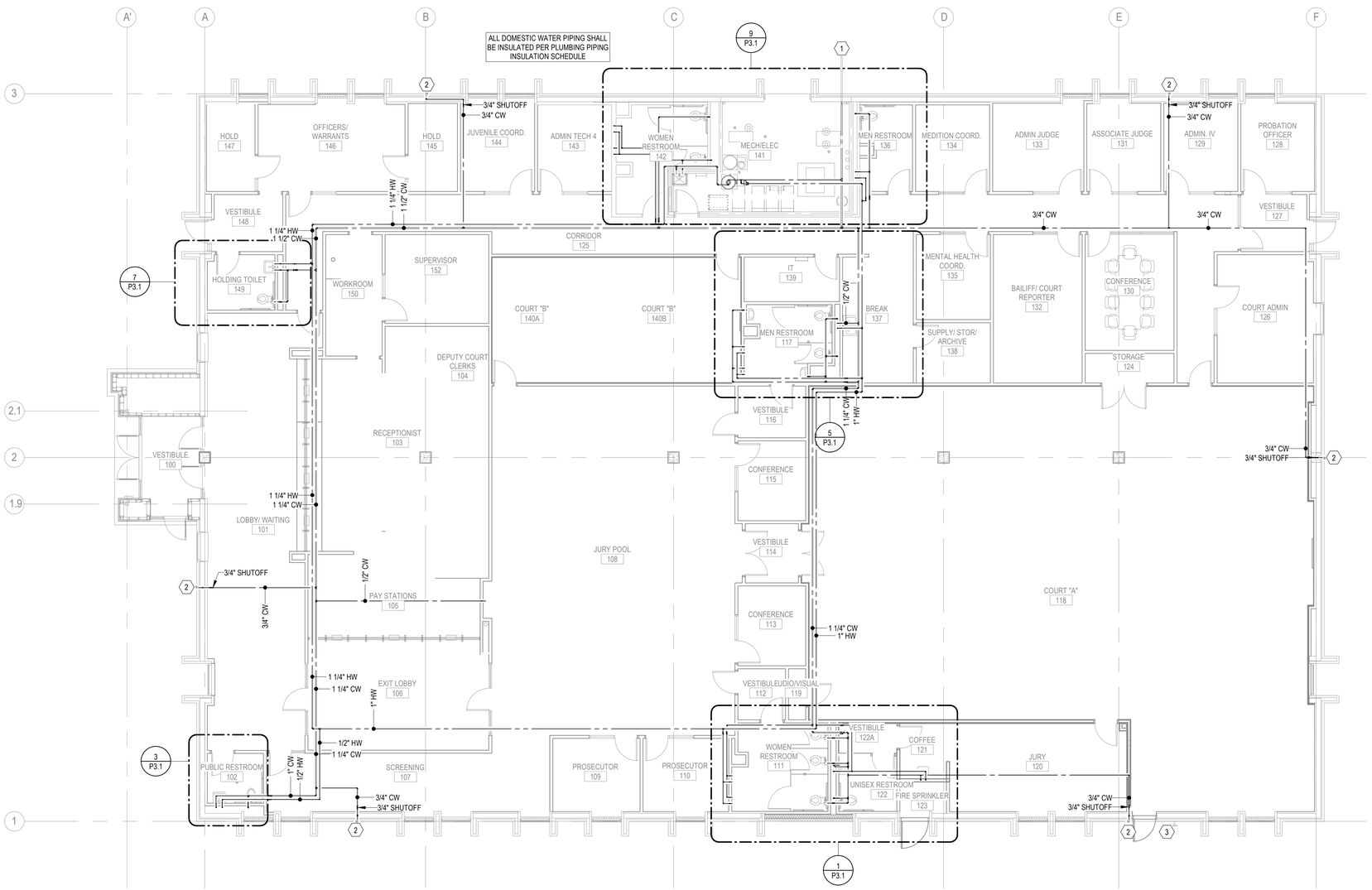

1 P2.1 PLUMBING SUPPLY PLAN
1/8" = 1'-0"

THE MCKINNEY PARTNERSHIP architects
3600 West Main
Suite 200
Norman, Oklahoma
73072
405.360.1400 p
405.364.8287 f
tmparch.com

Copyright © 2022 The McKinney Partnership Architects, P.C., All Rights Reserved

Seal:

LICENSED PROFESSIONAL ENGINEER
Nic Millard
23394
OKLAHOMA
11/18/22

Project:

City of Norman
Municipal Complex Renovation
Municipal Court
321 N. Webster Avenue
Norman, OK

Issue Date:
11/18/22 ISSUED FOR BIDDING

Revisions:

Project Number:
CM083319 (201253R)

Sheet Title:
PLUMBING SUPPLY PLAN

Sheet Number:
P2.1

COA#: 5338 Expires 06/30/2023
520 West Broadway Avenue Suite 101
Broken Arrow, Oklahoma 74012

918.895.6510 p
hpengineeringinc.com/
HP ENGINEERING

Autodesk Docs://201188K Norman Courthouse/221188K CoN County Courthouse.rvt
11/18/2022 5:35:39 PM

KEYNOTES

1. REFER TO OVERALL PLAN FOR CONTINUATION.
2. PROVIDE CW AND HW SHUT OFF VALVES.
3. FIELD VERIFY EQUIVALENT SIZE AND LOCATION OF EXISTING SANITARY SEWER PIPING AND CONNECT TO EXISTING.
4. FLOOR DRAIN SHALL REMAIN AS EXISTING.
5. FLOOR DRAIN SHALL REMAIN AS EXISTING. REPLACE WITH NEW COVER.

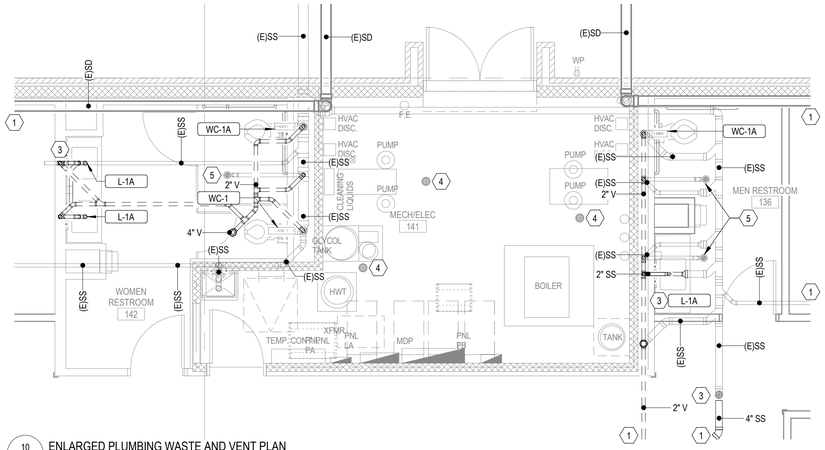

10 P3.1 ENLARGED PLUMBING WASTE AND VENT PLAN
1/4" = 1'-0"

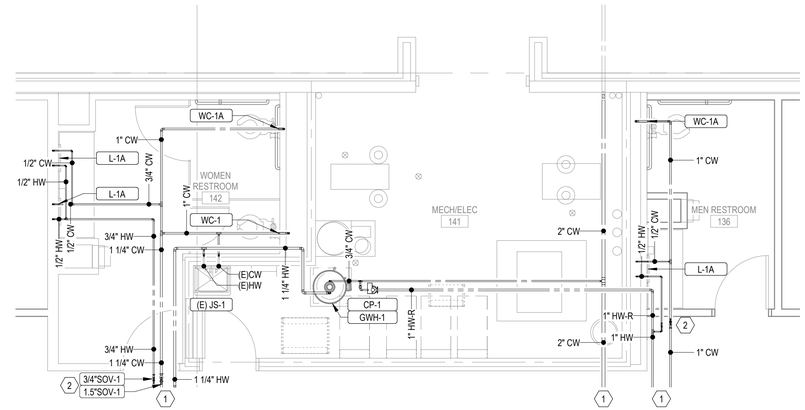

9 P3.1 ENLARGED PLUMBING SUPPLY PLAN
1/4" = 1'-0"

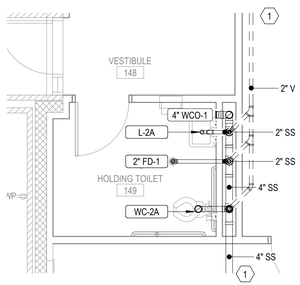

8 P3.1 ENLARGED PLUMBING WASTE AND VENT PLAN
1/4" = 1'-0"

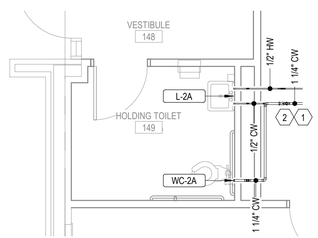

7 P3.1 ENLARGED PLUMBING SUPPLY PLAN
1/4" = 1'-0"

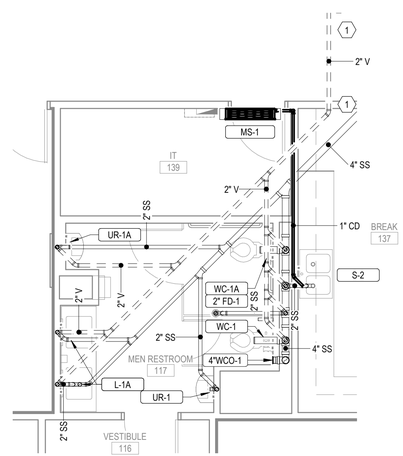

6 P3.1 ENLARGED PLUMBING WASTE AND VENT PLAN
1/4" = 1'-0"

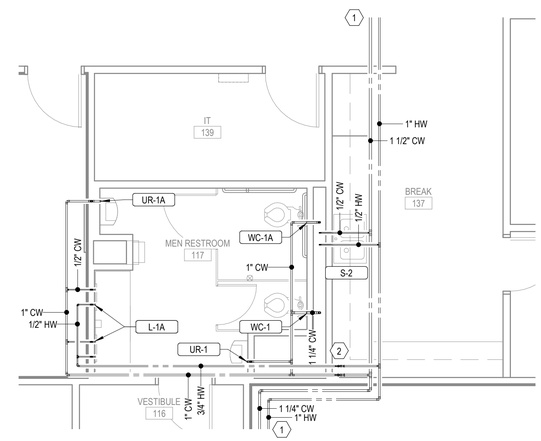

5 P3.1 ENLARGED PLUMBING SUPPLY PLAN
1/4" = 1'-0"

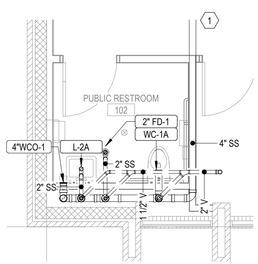

4A P3.1 ENLARGED PLUMBING WASTE AND VENT PLAN
1/4" = 1'-0"

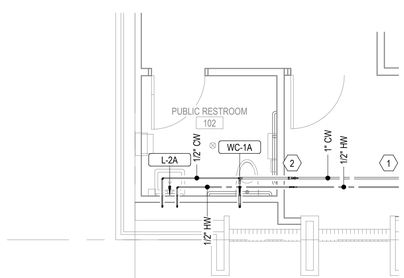

3 P3.1 ENLARGED PLUMBING SUPPLY PLAN
1/4" = 1'-0"

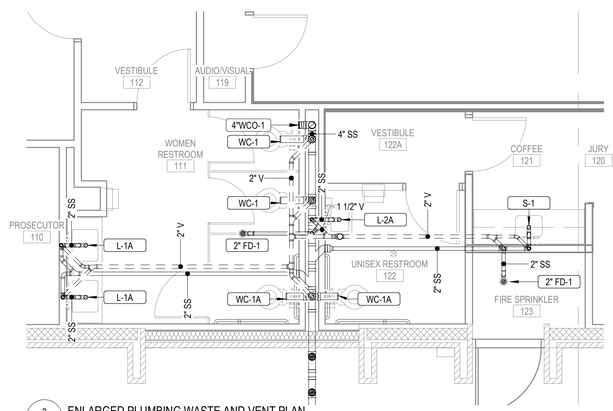

2 P3.1 ENLARGED PLUMBING WASTE AND VENT PLAN
1/4" = 1'-0"

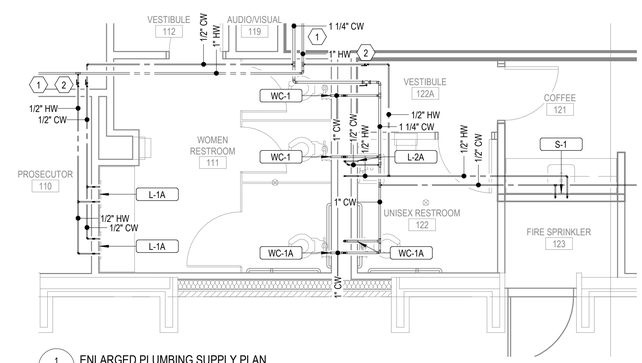

1 P3.1 ENLARGED PLUMBING SUPPLY PLAN
1/4" = 1'-0"

THE MCKINNEY PARTNERSHIP
architects

3600 West Main
Suite 200
Norman, Oklahoma
73072
405.360.1400 p
405.364.8287 f
tmparch.com

Copyright © 2022 The McKinney Partnership Architects, P.C., All Rights Reserved

Seal:

PROFESSIONAL ENGINEER LICENSED Nic Millard 23394 OKLAHOMA 11/18/22

Project:

City of Norman
Municipal Complex Renovation
Municipal Court

321 N. Webster Avenue
Norman, OK

Issue Date:
11/18/22 ISSUED FOR BIDDING

Revisions:

Project Number:
CM083319 (201253R)

Sheet Title:
ENLARGEMENTS - PLUMBING

Sheet Number:
P3.1

COA#: 5338 Expires 06/30/2023
520 West Broadway Avenue Suite 101
Broken Arrow, Oklahoma 74012

918.895.6510 p
hpengineeringinc.com/

HP ENGINEERING

Autodesk Docs://201188K Norman Courthouse/221188K CoN County Courthouse.rvt
11/18/2022 5:35:47 PM

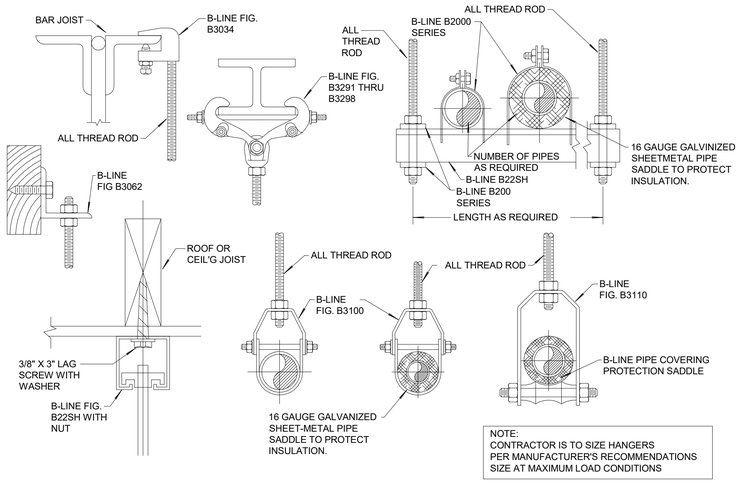

NOTE:
CONTRACTOR IS TO SIZE HANGERS PER MANUFACTURER'S RECOMMENDATIONS SIZE AT MAXIMUM LOAD CONDITIONS

9 / P4.1 PIPE HANGERS
NOT TO SCALE

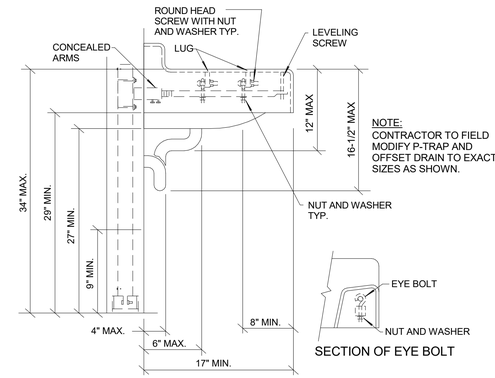

NOTE:
CONTRACTOR TO FIELD MODIFY P-TRAP AND OFFSET DRAIN TO EXACT SIZES AS SHOWN.

11 / P4.1 WALL HUNG LAVATORY CARRIER
NOT TO SCALE

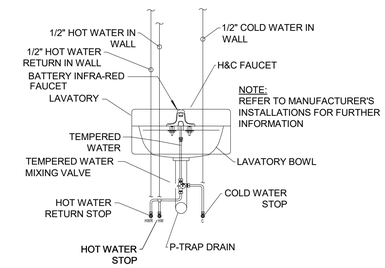

NOTE:
REFER TO MANUFACTURER'S INSTALLATIONS FOR FURTHER INFORMATION

10 / P4.1 WALL HUNG INFRA-RED LAVATORY DETAIL
NOT TO SCALE

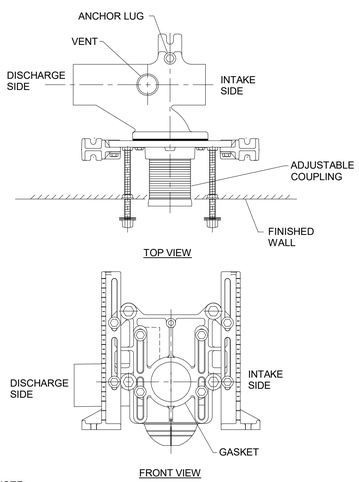

NOTE:
ADJUSTABLE, HORIZONTAL SIPHON JET WATER CLOSET WITH NO-HUB AND SPIGOT CONNECTIONS. COMPLETE WITH CAST IRON RIGHT-HAND, LEFT-HAND, OR DOUBLE MAIN FITTING WITH VENT ADJUSTABLE GASKETED FACEPLATE, UNIVERSAL FLOOR MOUNTED FOOT SUPPORTS, CORROSION RESISTANT ADJUSTABLE ABS COUPLING WITH INTEGRAL TEST CAP, FIXTURE BOLTS, TRIM AND STUD PROTECTORS. REAR ANCHOR TIE DOWN AND BONDED GASKET.

8 / P4.1 WATER CLOSET CARRIER ASSEMBLY
NOT TO SCALE

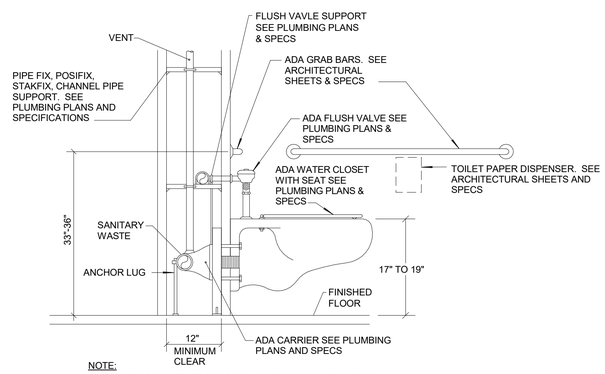

NOTE:
1. TAILPIECE & CARRIER BASE WILL VARY UPON APPLICATION.
2. BACK TO BACK WATER CLOSET INSTALLATION IS SIMILAR. CHASE REQUIREMENTS ARE 14" MINIMUM CLEARANCE.
3. PLUMBING CONTRACTOR IS TO VERIFY ALL ADA MOUNTING HEIGHTS OF GRAB BARS & WATER CLOSETS WITH ARCHITECTURAL PLANS & SPECIFIACTIONS & ADA REQUIREMENTS BEFORE ORDERING AND INSTALLING CARRIER, FLUSH VALVE, & WATER CLOSET.

7 / P4.1 WATER CLOSET CARRIER
NOT TO SCALE

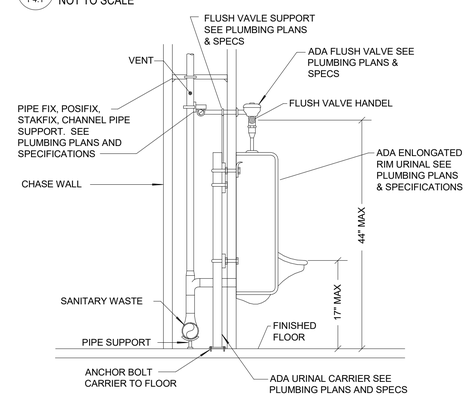

NOTE:
1. TAILPIECE & CARRIER BASE WILL VARY UPON APPLICATION.
2. PLUMBING CONTRACTOR IS TO VERIFY ALL ADA MOUNTING HEIGHTS OF WATER CLOSETS WITH ARCHITECTURAL PLANS & SPECIFIACTIONS & ADA REQUIREMENTS BEFORE ORDERING AND INSTALLING CARRIER, FLUSH VALVE, & URINAL.

6 / P4.1 URINAL CARRIER
NOT TO SCALE

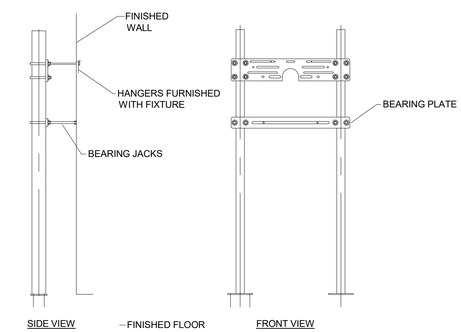

NOTE:
WALL URINAL SUPPORT SYSTEM WITH TOP AND BOTTOM PLATES. COMPLETE WITH RECTANGULAR STEEL UPRIGHTS WITH WELDED FEET. ADJUSTABLE SUPPORT PLATES, AND MOUNTING FASTENERS.

5 / P4.1 URINAL CARRIER ASSEMBLY
NOT TO SCALE

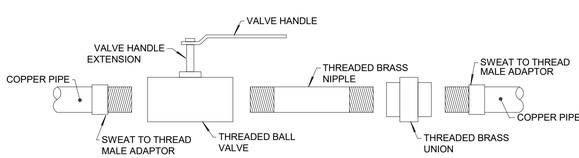

4 / P4.1 BALL VALVE
NOT TO SCALE

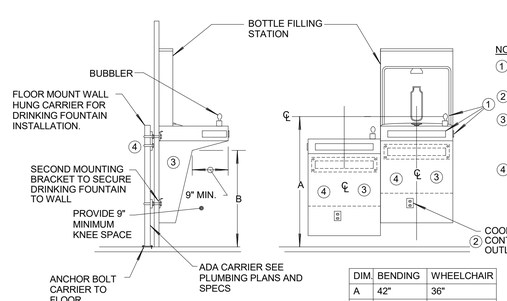

DIM.	BENDING	WHEELCHAIR
A	42"	36"
B	33"	27"

NOTES:
1. FOUNTAINS SHALL HAVE FRONT CONTROLS AND SPOUTS; AND WATER STREAM SHALL RISE FOUR INCHES MINIMUM ABOVE THE SPOUT.
2. WATER FOUNTAINS SHALL BE ELECTRICALLY OPERATED OR HAND AND FOOT OPERATED.
3. THE CLEAR FLOOR SPACE REQUIRED AT A DRINKING FOUNTAIN SHALL BE A MINIMUM OF 30" WIDE BY 48" LONG. THE LONG DIMENSION MUST BE PARALLEL TO THE DIRECTION OF APPROACH.
4. SIDE BY SIDE DRINKING FOUNTAINS ARE TO BE INSTALLED WITH INDIVIDUAL WASTE AND VENT PIPING AS SHOWN ON PLANS TO ALLOW ROOM FOR CARRIER TO FIT IN 4" WALL. COMBINATION WASTE AND VENT IS UNACCEPTABLE.

2. COORDINATE WITH ELECTRICAL CONTRACTOR, TO PLACE ELECTRICAL OUTLET (GFI) BEHIND CABINET

3 / P4.1 DOUBLE DRINKING FOUNTAIN W/ BOTTLE FILLER
NOT TO SCALE

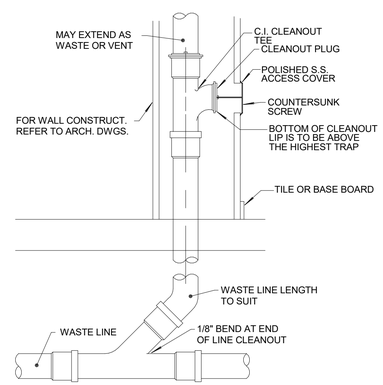

NOTE: CLEANOUTS ARE REQUIRED EVERY 50 FEET INDOORS AND 100 FEET OUTDOORS. CLEANOUTS INDICATED ON PLANS SHOW SPECIFIC DESIRED LOCATIONS FOR CLEANOUTS. ADDITIONAL CLEANOUTS TO MEET THE ABOVE REQUIREMENT ARE ALSO REQUIRED.

2 / P4.1 WALL CLEANOUT DETAIL
NOT TO SCALE

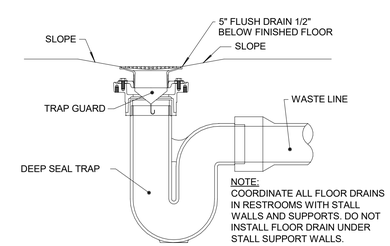

NOTE:
COORDINATE ALL FLOOR DRAINS IN RESTROOMS WITH STALL WALLS AND SUPPORTS. DO NOT INSTALL FLOOR DRAIN UNDER STALL SUPPORT WALLS.

1 / P4.1 FLOOR DRAIN FD-1
NOT TO SCALE

THE MCKINNEY PARTNERSHIP
architects
3600 West Main
Suite 200
Norman, Oklahoma
73072
405.360.1400 p
405.364.8287 f
tmparch.com

Copyright © 2022 The McKinney Partnership Architects, P.C., All Rights Reserved

Seal:

Project:

City of Norman
Municipal Complex Renovation
Municipal Court
321 N. Webster Avenue
Norman, OK

Issue Date:
11/18/22 ISSUED FOR BIDDING

Revisions:

Project Number:
CM083319 (201253R)

Sheet Title:
DETAILS - PLUMBING

Sheet Number:
P4.1

COA#: 5338 Expires 06/30/2023
520 West Broadway Avenue Suite 101
Broken Arrow, Oklahoma 74012

918.895.6510 p
hpengineeringinc.com/
HP ENGINEERING

Autodesk Docs://201188K Norman Courthouse/221188K CoN County Courthouse.rvt
11/18/2022 5:35:47 PM

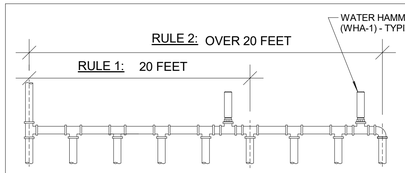

MULTIPLE FIXTURES FED FROM ONE SIDE (B)

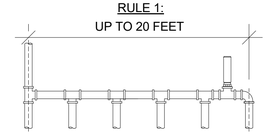

MULTIPLE FIXTURES FED FROM ONE SIDE (A)

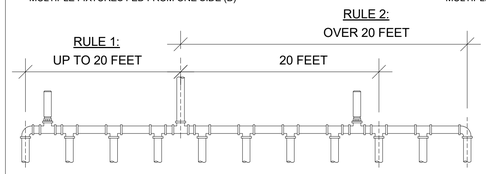

MULTIPLE FIXTURES FED FROM CENTRAL MAIN

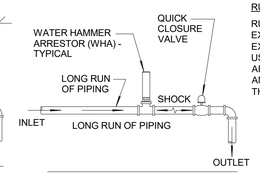

REMOTE FIXTURES

SIZING AND PLACEMENT:

AS SHOWN IN THE DIAGRAMS, IT HAS BEEN ESTABLISHED THAT THE PREFERRED LOCATION FOR THE WATER HAMMER ARRESTOR IS AT THE END OF THE BRANCH LINE BETWEEN THE LAST TWO FIXTURES SERVED. THE LOCATION OF THE WATER HAMMER ARRESTOR SHOWN IN THE DIAGRAMS APPLIES TO BRANCH LINES THAT DO NOT EXCEED 20 FEET IN LENGTH, FROM THE START OF THE HORIZONTAL BRANCH LINE TO THE LAST FIXTURE SUPPLY ON THIS BRANCH LINE. WHEN THE BRANCH LINE EXCEEDS THE 20 FOOT LENGTH, AN ADDITIONAL WATER HAMMER ARRESTOR SHOULD BE USED. REFER TO THE TWO RULES LISTED TO COVER THE PLACEMENT OF WATER HAMMER ARRESTORS.

RULE 1:

RULE 1 COVERS MULTIPLE FIXTURE BRANCH LINES WHICH DO NOT EXCEED 20 FEET LENGTH.
EXPLANATION: - FIXTURE UNIT SIZING AND SELECTION TABLE IS USED TO SELECT THE REQUIRED PDI UNIT (WATER HAMMER ARRESTOR).

RULE 2:

RULE 2 COVERS MULTIPLE FIXTURE BRANCH LINES WHICH EXCEED 20 FEET IN LENGTH.
EXPLANATION: - FIXTURE UNIT SIZING AND SELECTION TABLE IS USED TO SELECT THE REQUIRED PDI UNIT (WATER HAMMER ARRESTOR). THE SUM OF THE FIXTURE UNIT RATING OF UNITS X AND Y SHALL BE EQUAL TO OR GREATER THAN THE DEMAND OF THE BRANCHES.

SELECTION FOR LONG PIPING RUNS:

THE MAJORITY OF SIZING AND SELECTION APPLICATIONS WILL INVOLVE SINGLE AND MULTIPLE FIXTURE BRANCH LINES. THESE ARE EASILY HANDLED WITH THE SIZING AND SELECTION TABLE. THE REMAINDER OF THE APPLICATIONS INVOLVE INDIVIDUAL RUNS OF PIPING TO A REMOTE ITEM OF EQUIPMENT. THE PROPERLY SIZED WATER HAMMER ARRESTOR FOR SUCH APPLICATIONS CAN BE DETERMINED BY THE TABLES BELOW.

IDEALLY, THE FLOW PRESSURE IN BRANCH LINES SERVING FIXTURES SHOULD NEVER EXCEED 55 PSI. PRESSURE REDUCING VALVES SHOULD BE INSTALLED TO MAINTAIN PROPER PRESSURE. WHEN FLOW PRESSURES ARE 65 TO 85 PSI THE NEXT SIZE WATER HAMMER ARRESTOR SHOULD BE SELECTED. REFER TO SIZING TABLE FOR WATER PRESSURE OVER 65 PSI.

ALL SIZING DATA IN THIS SECTION IS BASED ON FLOW VELOCITIES OF 10 FPS OR THE CERTIFICATION TESTING WAS CONDUCTED WITH A VELOCITY OF 10 FPS TO OFFER ASSURANCE THAT PDI APPROVED UNITS WERE CAPABLE OF HANDLING SHOCK OF MAXIMUM INTENSITY THAT MAY BE ENCOUNTERED.

WHEN LONG RUNS OF PIPING ARE EMPLOYED TO SERVE A REMOTE ITEM OF EQUIPMENT, THE WATER HAMMER ARRESTOR SHOULD BE LOCATED AS CLOSE AS POSSIBLE TO THE POINT OF QUICK CLOSURE. AT THIS LOCATION, THE WATER HAMMER ARRESTOR WILL CONTROL THE DEVELOPED ENERGY AND PREVENT THE SHOCK WAVE FROM SURGING THROUGH THE PIPING SYSTEM. A TYPICAL EXAMPLE OF PLACEMENT IS AS SHOWN.

TABLE A - FIXTURE UNIT SIZING INFORMATION

FIXTURE	TYPE OF SUPPLY CONTROL	WEIGHT IN FIXTURE UNITS					
		PUBLIC			PRIVATE		
		TOTAL	C.W.	H.W.	TOTAL	C.W.	H.W.
WATER CLOSET 1.66 PF	FLUSH VALVE	8	8	–	5	5	–
WATER CLOSET 1.66 PF	FLUSH TANK	5	5	–	2.5	2.5	–
PEDESTAL URINAL 1.06 PF	FLUSH VALVE	4	4	–	–	–	–
STALL OR WALL URINAL	FLUSH VALVE 1.06 PF	4	4	–	–	–	–
STALL OR WALL URINAL	FLUSH TANK 1.06 PF	2	2	–	–	–	–
LAVATORY	FAUCET	2	1.5	1.5	1	1	1
BATHTUB	FAUCET	4	2	3	2	1.5	1.5
SHOWER HEAD	MIXING VALVE	4	2	3	2	1	2
BATHROOM GROUP	FLUSH VALVE CLOSET	–	–	–	8	8	3
BATHROOM GROUP	FLUSH TANK CLOSET	–	–	–	6	6	3
SEPARATE SHOWER	MIXING VALVE	–	–	–	2	1	2
SERVICE SINK	FAUCET	3	3	3	–	–	–
LAUNDRY TUBS (1-3)	FAUCET	–	–	–	3	3	3
COMBINATION FIXTURE	FAUCET	–	–	–	3	3	3

UPC-UNIFORM PLUMBING CODE

609.10 WATER HAMMER. ALL BUILDING WATER SUPPLY SYSTEMS IN WHICH QUICK-ACTING VALVES ARE INSTALLED SHALL BE PROVIDED WITH DEVICES TO ABSORB THE HAMMER CAUSED BY HIGH PRESSURES RESULTING FROM THE QUICK CLOSING OF THESE VALVES. THESE PRESSURE-ABSORBING DEVICES SHALL BE APPROVED MECHANICAL DEVICES. WATER PRESSURE-ABSORBING DEVICES SHALL BE INSTALLED AS CLOSE AS POSSIBLE TO QUICK-ACTING VALVES.

IPC-INTERNATIONAL PLUMBING CODE

604.9 WATER HAMMER. THE FLOW VELOCITY OF THE WATER DISTRIBUTION SYSTEM SHALL BE CONTROLLED TO REDUCE THE POSSIBILITY OF WATER HAM-MER. A WATER HAMMER ARRESTOR SHALL BE INSTALLED WHERE QUICK-CLOSING VALVES ARE UTILIZED. WATER HAMMER ARRESTORS SHALL BE INSTALLED IN ACCORDANCE WITH THE MANUFACTURER'S SPECIFICATIONS. WATER HAMMER ARRESTORS SHALL CONFORM TO ASSE 1010.

TABLE B - SERIES 15M2 SIZING AND SELECTION

SIZE INCHES	CROSS FIXTURE UNITS	REFERENCE PDI STANDARDS*
1/2"	1-11	A
3/4"	12-32	B
1"	33-60	C
1-1/4"	61-113	D
1-1/2"	114-154	E
2"	155-330	F

*PDI STANDARDS (PLUMBING AND DRAINAGE INSTITUTE):
http://www.pdionline.org/certified-water-hammer-arreste/
https://law.resource.org/pub/us/code/bsc.ca.gov/sibr/org.pdi.PDI-WH-201-011810.pdf

GENERAL WHA NOTES:

LOCATE THE WHA IN A MULTIPLE FIXTURE SYSTEM AT THE END OF THE BRANCH LINE BETWEEN THE LAST TWO FIXTURES SERVED. FOR REMOTE INSTALLATIONS THE WHA SHOULD BE PLACED AS CLOSE TO THE POINT OF VALVE CLOSURE AS POSSIBLE. INSTALL WHA's APPROVED FOR SEALED-WALL INSTALLATION ON WATER LINES CONNECTED TO SOLENOID VALVES OR FLUSH VALVES. SIZE, LOCATE, AND INSTALL IN ACCORDANCE WITH PDI STANDARD WH 201. IDEALLY THE FLOW PRESSURE IN BRANCH LINES SERVING FIXTURES SHOULD NEVER EXCEED 55 P.S.I.G. PROVIDE ACCESS PANEL AT EACH LOCATION WHERE THERE IS NOT AN ACCESSIBLE CEILING. MINIMUM SIZE OF 8" x 8".

FLUSHOMETER VALVE:
A VALVE ATTACHED TO A PRESSURIZED WATER SUPPLY PIPE AND SO DESIGNED THAT WHEN ACTIVATED TO OPENS THE LINE FOR DIRECT FLOW INTO THE FIXTURE AT A RATE AND QUANTITY TO OPERATE THE FIXTURE PROPERLY, AND THE GRADUALLY CLOSES TO RESEAL FIXTURE TRAPS AND AVOID WATER HAMMER.

QUICK-CLOSING VALVE:
A VALVE OR FAUCET THAT CLOSES AUTOMATICALLY WHEN RELEASED MANUALLY OR THAT IS CONTROLLED BY A MECHANICAL MEANS FOR FAST-ACTION CLOSING.

WATER HAMMER ARRESTORS

SIZE	WATTS MODEL
THREADED	
1⁄2"	15M2-A
3⁄4"	15M2-B
1"	15M2-C
1"	15M2-D
1"	15M2-E
1"	15M2-F
SOLDER	
1⁄2"	15M2-AS
3⁄4"	15M2-BS
1"	15M2-CS
1"	15M2-DS
1"	15M2-ES
1"	15M2-FS

MODELS ABOVE ARE WATTS AND IS A BASIS OF DESIGN. THE FOLLOWING MANUFACTURERS ARE ACCEPTED IN NAME ONLY:
SIOUX CHIEF, WATTS, PPI, PROFLO, ZURN-WILKINS

SIZING TABLE

FOR WATER PRESSURE UP TO 65 PSI						
LENGTH OF PIPE (ft)	NOMINAL PIPE DIAMETER - IN.					
OF PIPE	1/2"	3/4"	1"	1.25"	1.5"	2"
25'	A	A	B	C	D	E
50'	A	B	C	D	E	F
75'	B	C	D	AE	F	EF
100'	C	D	E	F	CF	FF
125'	C	D	F	AF	EF	EFF
150'	D	E	F	DF	FF	FFF
OVER 65 PSI AND UP TO 85PSI						
LENGTH OF PIPE (ft)	NOMINAL PIPE DIAMETER - IN.					
OF PIPE	1/2"	3/4"	1"	1.25"	1.5"	2"
25'	B	B	C	D	E	F
50'	B	C	D	E	F	CF
75'	C	D	E	F	CF	FF
100'	D	E	F	CF	EF	EFF
125'	D	E	CF	DF	FF	BFFF
150'	E	F	CF	FF	DFF	FFFF

SIZING AND SELECTION TABLE

SIZE (DN)	MODEL	ORDER CODE	MODEL	ORDER CODE	CROSS FIXTURE	REF. PDI STANDARD UNITS
IN	THREADED			SOLDER		
1/2"	15M2-A	0750140	15M2-AS	0750150	1-11	A
3/4"	15M2-B	0750141	15M2-BS	0750151	12-32	B
1"	15M2-C	0750142	15M2-CS	0750152	33-60	C
1"	15M2-D	0750143	15M2-DS	0750153	61-113	D
1"	15M2-E	0750144	15M2-ES	0750154	114-154	E
1"	15M2-F	0750145	15M2-FS	0750155	155-330	F

3 / P4.2 WATER CLOSET INFRA-RED DETAIL
NOT TO SCALE

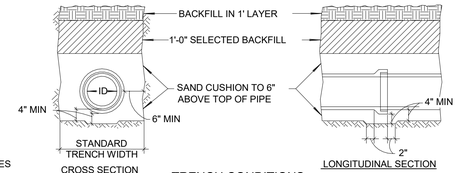

CROSS SECTION

TRENCH CONDITIONS

LONGITUDINAL SECTION

ALL FINISHED SUB GRADES SHALL BE PREPARED ACCURATELY BY MEANS OF HAND TOOLS.

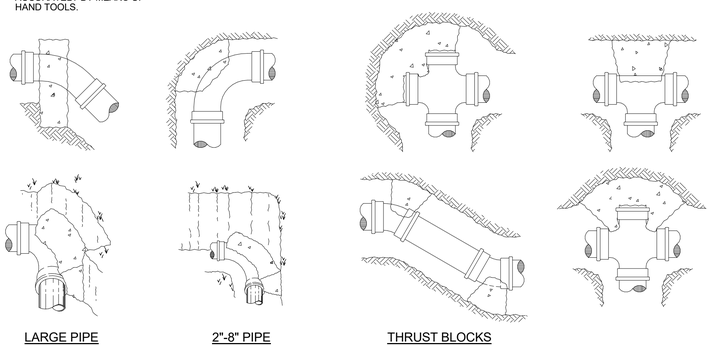

LARGE PIPE

2"-8" PIPE

THRUST BLOCKS

2 / P4.2 THRUST BLOCKS
NOT TO SCALE

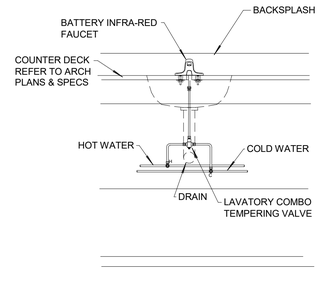

FRONT VIEW

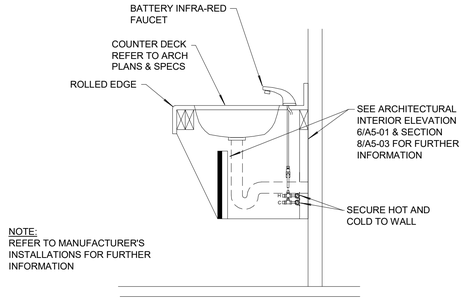

NOTE:
REFER TO MANUFACTURER'S INSTALLATIONS FOR FURTHER INFORMATION

SIDE VIEW

1 / P4.2 KITCHEN SINK CONNECTION DETAIL
NOT TO SCALE

COA#: 5338 Expires 06/30/2023
520 West Broadway Avenue Suite 101
Broken Arrow, Oklahoma 74012

918.895.6510 p
hpengineeringinc.com/

HP ENGINEERING

THE MCKINNEY PARTNERSHIP
architects

3600 West Main
Suite 200
Norman, Oklahoma
73072
405.360.1400 p
405.364.8287 f
tmparch.com

Copyright © 2022 The McKinney Partnership Architects, P.C., All Rights Reserved

Seal:

LICENSED PROFESSIONAL ENGINEER
Nic Millard
23394
OKLAHOMA
11/18/22

Project:

City of Norman
Municipal Complex Renovation
Municipal Court
321 N. Webster Avenue
Norman, OK

Issue Date:
11/18/22 ISSUED FOR BIDDING

Revisions:

Project Number:
CM083319 (201253R)

Sheet Title:
DETAILS - PLUMBING

Sheet Number:
P4.2

Autodesk Docs://201188K Norman Courthouse/221188K CoN County Courthouse.rvt
11/18/2022 5:35:47 PM

ROUGH-IN AND MOUNTING HEIGHT SCHEDULE

NOTES:
1. ALL VENT LINE SIZES SHOWN ARE MINIMUM UNLESS SHOWN LARGER ON RISER DIAGRAMS.
2. SIZES SHOWN FOR WASTE ARE FOR RISERS ONLY.
3. ALL DRAIN AND VENT LINES BELOW SLAB SHALL BE 2" OR LARGER.
4. VENT LINES SHALL RISE 6" ABOVE FLOOD LEVEL RIM BEFORE OFFSETTING HORIZONTALLY, EXCEPT FOR INTERCEPTORS LOCATED OUTDOORS.
5. SIZES SHOWN APPLY UNLESS NOTED DIFFERENTLY ON PLANS.

FIXTURE	WASTE	VENT	COLD WATER	HOT WATER	HEIGHT OF INSTALLATION
DRINKING FOUNTAIN	1-1/2"	1-1/2"	1/2"		NON-ADA 40" TO TOP OF ORIFICE ADA 36" TO TOP OF ORIFICE
FLOOR DRAINS/SINKS	2"	1-1/2"			
HOSE BIBB			3/4"		18" ABOVE GRADE OUTSIDE, 18" A.F.F. INSIDE
JANITOR'S SINK	3"	1-1/2"	1/2"	1/2"	
LAVATORIES AND SINKS, COUNTER MOUNTED	1-1/2"	1-1/4"	1/2"	1/2"	
LAVATORIES AND SINKS, WALL MOUNTED	1-1/2"	1-1/4"	1/2"	1/2"	NON-ADA 31" TO TOP OF RIM ADA 34" TO TOP OF RIM
OPEN HUB DRAIN	2"	1-1/2"			PROVIDE 3" PVC REDUCER, MOUNT AT HEIGHT REQUIRED FOR INSTALL LOCATION
SUPPLY BOX			1/2"		12" TO BOTTOM OF BOX
URINAL FLUSH VALVE WALL MOUNTED	2"	1-1/4"	1"		NON-ADA 24" TO TOP OF FLOOD LEVEL ADA 17" TO TOP OF FLOOD LEVEL GRADES K-3, 18" TO TOP OF FLOOD LEVEL GRADES 4-6, 20" TO TOP OF FLOOD LEVEL GRADES 7-9, 22" TO TOP OF FLOOD LEVEL GRADES 10-12, 24" TO TOP OF FLOOD LEVEL
UTILITY BOX	2"	1-1/2"	1/2"	1/2"	36" TO BOTTOM OF BOX
WATER CLOSET FLUSH VALVE FLOOR MOUNTED	3"	1-1/2"	1-1/4"		
WATER CLOSET FLUSH VALVE WALL MOUNTED	3"	1-1/2"	1-1/4"		NON-ADA 15" TO TOP OF BOWL ADA 17" TO TOP OF BOWL GRADES K-3, 12" TO TOP OF BOWL GRADES 4-12, 15" TO TOP OF BOWL

PIPING MATERIAL SCHEDULE

DESCRIPTION	MATERIAL
ABOVE GROUND GAS	SCHEDULE 40 BLACK STEEL WITH MALLEABLE IRON FITTINGS OR WELDED JOINTS WITH BUTT WELD FITTINGS. PROVIDE CORROSION-RESISTANT MATERIAL ON PIPING EXPOSED TO ATMOSPHERE OR IN CONTACT WITH MATERIAL EXERTING A CORROSIVE ACTION
ABOVE GROUND SANITARY SEWER AND VENT	SERVICE WEIGHT (SV) CAST IRON HUB AND SPIGOT PIPE AND FITTINGS. COAT INSIDE AND OUTSIDE WITH COAL TAR VARNISH. COMPRESSION NEOPRENE GASKETS FOR JOINTS.
ABOVE GROUND SANITARY SEWER AND VENT	PVC SCHEDULE 40 PIPE AND FITTINGS EXCEPT IN PLENUM RETURN AREAS. IN PLENUM RETURN AREAS WRAP PVC WITH 1" FIRE WRAP.
ACID RESISTANT PIPING ABOVE GROUND	SCHEDULE 40 POLYPROPYLENE WITH MECHANICAL JOINT COUPLINGS EQUAL TO ORION BLUELINE. FIRE RETARDANT. MEETS ASTM D634, SELF EXTINGUISHING. ASTM D2843 SMOKE CHAMBER TEST, MAX. VALUE LESS THAN 50.
ACID RESISTANT PIPING BELOW GROUND	SCHEDULE 40 POLYPROPYLENE WITH MECHANICAL JOINT COUPLINGS EQUAL TO ORION BROWNLINE, NON-FIRE RETARDANT.
ACID RESISTANT PIPING IN PLENUM	SCHEDULE 40 POLYVINYLIDENE (PVDF) WITH MECHANICAL JOINT COUPLINGS EQUAL TO ORION KYNAR BRAND PIPING ASME E-84 STANDARD FOR FLAME SPREAD AND SMOKE GENERATION.
FLEXIBLE GAS PIPING INSIDE BUILDING	FOR FINAL CONNECTION TO EQUIPMENT ONLY. CORRUGATED STAINLESS STEEL GAS LINE WITH POLYETHYLENE JACKET AND FITTINGS BY MFG. MUST MEET ANSI, NFPA, FACTORY MUTUAL CODE AND LISTINGS AS AN ACCEPTABLE GAS PIPING MATERIAL. ALL STATE AND LOCAL CODE APPROVALS. PROVIDE PIPING EQUAL TO TRACPIPE BY OMEGA FLEX. SIZE PER MANUFACTURER'S INSTALLATION INSTRUCTIONS.
KITCHEN DRAIN PIPING	EPOXY-COATED CAST IRON PIPE OR CPVC AND FITTINGS
STORM DRAIN PIPING, ROOF DRAIN PIPING ABOVE AND BELOW GROUND	STANDARD WEIGHT CAST IRON "NO-HUB" PIPE AND FITTINGS, AND JOINTS OF STANDARD WEIGHT STAINLESS STEEL / NEOPRENE COUPLINGS.
STORM DRAIN PIPING, ROOF DRAIN PIPING BELOW GROUND	SCHEDULE 40 PVC PIPE AND FITTINGS.
UNDERGROUND SANITARY SEWER AND VENT PIPING INSIDE BUILDING AND OUTSIDE BUILDING	SERVICE WEIGHT (SV) CAST IRON HUB AND SPIGOT PIPE AND FITTINGS. COAT INSIDE AND OUTSIDE WITH COAL TAR VARNISH. COMPRESSION NEOPRENE GASKETS FOR JOINTS.
UNDERGROUND SANITARY SEWER AND VENT PIPING INSIDE BUILDING AND OUTSIDE BUILDING	PVC SCHEDULE 40 PIPE AND FITTINGS.
WATER DISTRIBUTION PIPE	WATER DISTRIBUTION PIPE SHALL CONFORM TO NSF 61 AND SHALL BE COPPER AND CONFORM TO THE STANDARDS LISTED IN TABLE 605.4 OF THE I.P.C

PLUMBING PIPING INSULATION SCHEDULE

		INSULATION THICKNESS NOMINAL PIPE SIZE			
DESCRIPTION	INSULATION TYPE	<1	1 TO <1-1/2	1-1/2 TO <4	4 TO <8
DOMESTIC COLD WATER PIPING BELOW GRADE	PVC OR HDPE JACKET ONLY, NO INSULATION	1	1	1.5	1.5
CONDENSATE PIPING ABOVE GRADE	ELASTOMERIC, ADD ASTM E84 COMPLIANT JACKET IN AIR PLENUM SPACES	0.5	1	1	1
PVC WASTE VENT AND WASTE DRAIN IN AIR PLENUM SPACE	COMPRESSED FIBERGLASS OR ELASTOMERIC WITH ASTM E84 COMPLIANT JACKET	0.5	0.5	0.5	0.5
PVC AND CAST IRON ROOF DRAINS IN ALL AREAS ABOVE GRADE	COMPRESSED FIBERGLASS OR ELASTOMERIC WITH ASTM E84 COMPLIANT JACKET	1	1	1.5	1.5
WATER COOLER TRAPS, ALL EXPOSED LAVATORY AND SINK TRAPS, TAILPIECES, HOT AND COLD WATER SUPPLY LINES/ANGLE VALVES TO THESE DEVICES	EQUIVALENT TO TRUEBRO 102 E-Z PIPE COVER	0.125	0.125	0.125	0.125
DOMESTIC HOT WATER AND HOT WATER RETURN PIPING BELOW GRADE	ELASTOMERIC OR FOAM. ENCAPSULATE WITH PVC OR HDPE JACKET	1	1	1.5	1.5
DOMESTIC COLD WATER, HOT WATER, AND HOT WATER RETURN PIPING ABOVE GRADE	ELASTOMERIC, ADD ASTM E84 COMPLIANT JACKET IN AIR PLENUM SPACES	1	1	1.5	1.5
CAST IRON WASTE DRAIN AND WASTE VENT IN ALL AREAS ABOVE GRADE	NOT REQUIRED				
PVC WASTE DRAIN IN WALLS, AND WASTE VENT IN ALL AREAS ABOVE GRADE	COMPRESSED FIBERGLASS OR ELASTOMERIC WITH ASTM E84 COMPLIANT JACKET	1"	1"	1.5"	1.5"
HEATING HOT WATER	RIGID GLASS-FIBER	1"	1"	1"	1.5"
CHILLED WATER	RIGID GLASS-FIBER	1"	1"	1"	1.5"

FIXTURE SCHEDULE

FIXTURE TAG	FIXTURE TYPE	FIXTURE MANUFACTURER	FIXTURE MODEL	FIXTURE MATERIAL DESCRIPTION	FAUCET/VALVE MANUFACTURER	FAUCET/VALVE MODEL	FAUCET/VALVE TYPE	DESCRIPTION	ELEC. POWER
EWC-1	WATER COOLER - DUAL HEIGHT W/BOTTLE FILLER - ADA	ELKAY	LZSTL8WSLP					ADA APPROVED, W/ TOUCH PADS ON FRONT, FLEXIBLE SAFETY BUBBLER, P-TRAP, WATER VALVE, MLP200 CARRIER. MOUNT UNIT AT ADA COMPLIANT HEIGHT.	115V, 1PH, 370W, 7A
L-1A	LAVATORY - UNDERMOUNT COUNTER - ADA	AMERICAN STANDARD	0614.000	WHITE VITREOUS CHINA	AMERICAN STANDARD	2175.504	BATTERY	TMV-1, ZURN Z8743-PC GRID STRAINER, ZURN Z8700 SERIES P-TRAP, ZURN Z8800 SERIES STOP WITH FLEXIBLE SUPPLIES AND TURN KEY, ZURN Z8946-1-NT ADA TRAP, STOP AND SUPPLY PROTECTOR PVC TYPE INSULATION AROUND "P" TRAP & IPS CONNECTIONS, THREE HOLES ON DECK 4" CENTERS, COORDINATE LOCATION OF FAUCET WITH SINK PRIOR TO CUTTING HOLES	
L-2A	LAVATORY - WALL HUNG - ADA	AMERICAN STANDARD	0321.026	WHITE VITREOUS CHINA	AMERICAN STANDARD	2175.504	BATTERY	TMV-1, ZURN Z8743-PC GRID STRAINER, ZURN Z8700 SERIES P-TRAP, ZURN Z8800 SERIES STOP WITH FLEXIBLE SUPPLIES AND TURN KEY, ZURN Z8946-1-NT ADA TRAP, STOP AND SUPPLY PROTECTOR PVC TYPE INSULATION AROUND "P" TRAP & IPS CONNECTIONS, CONSEALED ARM CARRIER SYSTEM, THREE HOLES ON DECK 4" CENTERS	
S-1	SINGLE BOWL SINK - DROP-IN	ELKAY	ELUH1316	STAINLESS STEEL	ELKAY	LKAV3032	MANUAL	SINGLE LEVER POST MOUNT, CIRCULAR BASE, 13" HIGH SPOUT, 8" REACH, AERATOR, 3-1/2" OPENING DRAIN. McGUIRE 151M HEAVY DUTY BRASS BASKET & STRAINER, 1 1/2", CHROME PLATED TAILPIECE. McGUIRE 8912 1 1/2" x 1 1/2" HEAVY DUTY CHROME PLATED CAST BRASS P-TRAP W/ CLEANOUT PLUG, McGUIRE 170LK CHROME PLATED SOLID BRASS ANGLE STOPS W/ 5" CHROME PLATED COPPER EXTENSION TUBE & LOOSE KEYS, FLEXIBLE CHROME PLATED COPPER RISERS, McGUIRE 111C SERIES 1 1/2" END OUTLET CONTINUOUS WASTE, PROVIDE ONE FAUCET HOLE ON DECK.	
S-2	DUAL BOWL SINK - COUNTER DROP-IN	ELKAY	ELUH3220PD	STAINLESS STEEL	ELKAY	LKAV3031	MANUAL	DUAL LEVER FAUCET WITH SPRAY, 12" HIGH SWING SPOUT, 8" REACH, 0.5GPM AERATOR, 3-1/2" OPENING DRAIN. McGUIRE 151M HEAVY DUTY BRASS BASKET & STRAINER, 1 1/2", CHROME PLATED TAILPIECE. McGUIRE 8912 1 1/2" x 1 1/2" HEAVY DUTY CHROME PLATED CAST BRASS P-TRAP W/ CLEANOUT PLUG, McGUIRE 170LK CHROME PLATED SOLID BRASS ANGLE STOPS W/ 5" CHROME PLATED COPPER EXTENSION TUBE & LOOSE KEYS, FLEXIBLE CHROME PLATED COPPER RISERS, McGUIRE 111C SERIES 1 1/2" END OUTLET CONTINUOUS WASTE, PROVIDE ONE FAUCET HOLE ON DECK AND BADGER 1 IN-SINK-ERATOR DISPOSAL.	
UR-1	URINAL - WALL HUNG	AMERICAN STANDARD	6590.001US	WHITE VITREOUS CHINA	ZURN	186 ESS 0.5	BATTERY	INTEGRAL ELONGATED FLUSHING RIM, INTEGRAL TRAP, 2" FEMALE FLANGED OUTLET CONNECTION, J.R. SMITH 0615 URINAL SUPPORT, MANUAL OVERRIDE.	
UR-1A	URINAL - WALL HUNG - ADA	AMERICAN STANDARD	6590.001US	WHITE VITREOUS CHINA	ZURN	186 ESS 0.5	BATTERY	INTEGRAL ELONGATED FLUSHING RIM, INTEGRAL TRAP, 2" FEMALE FLANGED OUTLET CONNECTION, J.R. SMITH 0615 URINAL SUPPORT, MANUAL OVERRIDE.	
WC-1	WATER CLOSET - WALL HUNG	AMERICAN STANDARD	3351.101	WHITE VITREOUS CHINA	SLOAN	111 ESS 1.6	BATTERY	1.6 GPF SIPHON JET BOWL, EZ-FLO 65913 OPEN FRONT SEAT, J.R. SMITH 0210-M54-XK 1000# CARRIER. ANITMICROBIAL CERAMIC GLAZE. INSTALL AT ADA COMPLIANT HEIGHT.	
WC-1A	WATER CLOSET - WALL HUNG - ADA	AMERICAN STANDARD	3351.101	WHITE VITREOUS CHINA	SLOAN	111 ESS 1.6	BATTERY	1.6 GPF SIPHON JET BOWL, EZ-FLO 65913 OPEN FRONT SEAT, J.R. SMITH 0210-M54-XK 1000# CARRIER. ANITMICROBIAL CERAMIC GLAZE. INSTALL AT ADA COMPLIANT HEIGHT.	
WC-2A	WATER CLOSET - FLOOR - FLUSH VALVE - ADA	AMERICAN STANDARD	3461.001	WHITE VITREOUS CHINA	SLOAN	111 ESS 1.6	BATTERY	1.6 GPF, EZ-FLO 65913 OPEN FRONT SEAT, Z5972-COMB CLOSET BOLT/WAX RING KIT, INSTALL AT ADA COMPLIANT HEIGHT.	

REMARKS:
1. COORDINATE WITH OWNER TO VERIFY THAT FIXTURE SELECTIONS MATCH SIMILAR PROPERTIES.
2. INSTALL FIXTURE, OPTIONS, AND ACCESORIES PER MANUFACTURER'S RECOMMENDATIONS.

FLOOR DRAIN SCHEDULE

ID	DESCRIPTION	MANUFACTURER	MODEL	MATERIAL DESCRIPTION: DRAIN BODY	MATERIAL DESCRIPTION: STRAINER	SPECIFICATION	REMARKS
FD-1	FLOOR DRAIN	WATTS	FD-100-A	EPOXY COATED CAST IRON	NICKEL BRONZE	EPOXY COATED CAST IRON FLOOR DRAIN WITH ANCHOR FLANGE, REVERSIBLE CLAMPING COLLAR WITH PRIMARY & SECONDARY WEEPHOLES, ADJUSTABLE ROUND HEEL PROOF NICKEL BRONZE STRAINER, AND NO HUB OUTLET.	ALL

REMARKS:
1. REFER TO DIVISION 22 SPECIFICATIONS FOR ALTERNATE MANUFCTURERS. PREBID PREAPPROVAL IS REQUIRED.
2. DESCRIPTION TO TAKE PRECEDENCE OVER MODEL NUMBER.

DOMESTIC CIRCULATING PUMP SCHEDULE

ID	SYSTEM	MANUFACTURER	MODEL NO.	TYPE	PUMP: DESIGN FLOW	PUMP: HEAD	PUMP: DRIVE TYPE	MOTOR: POWER	MOTOR: ECM	UNIT WEIGHT	FLA	MCA	MOCP	VOLT	PH	REMARKS
CP-1	DOM. HW-R	BELL & GOSSETT	ECOCIRC XL 36-45	INLINE	3.9 GPM	31.3 FT	DIRECT	174 W	Yes	20 lb	5.8 A	7.3 A	15.0 A	120 V	1	ALL

REMARKS:
1. REPLACE EXISTING RECIRCULATION PUMP AND ESTABLISH NEW HOT WATER RECIRCULATION LOOP TO ALL HOT WATER FIXTURES.
2. REFER TO DIVISION 22 SPECIFICATIONS FOR ALTERNATE MANUFCTURERS. PREBID PREAPPROVAL IS REQUIRED.
3. INTERLOCK WITH AQUASTAT.

(EXISTING) GAS-FIRED WATER HEATER SCHEDULE

ID	MANUFACTURER	MODEL NO.	GAS BURNER: INPUT	GAS BURNER: EFF	VOL.	VOLT	PH	REMARKS
GWH-1	Bradford White	MI40T6FBN	40000 Btu/h	80.0%	40.0 gal	120 V	1	ALL

REMARKS:
1. INSTALL PER MANUFACTURERS SPECIFICATIONS AND CONNECT TO EXISTING FLUE AND EXPANSION TANK.
2. REFER TO DIVISION 22 SPECIFICATIONS FOR ALTERNATE MANUFCTURERS. PREBID PREAPPROVAL IS REQUIRED.

PIPE ACCESSORY SCHEDULE

TYPE ID	NOMINAL DIAMETER	DESCRIPTION	MANUFACTURER	MODEL	REMARKS
FCO		Floor Cleanout with Round Stainless Steel Top	WATTS	CO-1204-R	ALL
WCO-1		Line Cleanout with Stainless Steel Cover	WATTS	CO-452-RD	ALL
WCO-1		Line Cleanout with Stainless Steel Cover	WATTS	CO-454-RD	ALL
SHUTOFF	1/2"	1/4 TURN BALL VALVE			ALL
SHUTOFF	3/4"	1/4 TURN BALL VALVE			ALL
SHUTOFF	1"	1/4 TURN BALL VALVE			ALL
SHUTOFF	1 1/4"	1/4 TURN BALL VALVE			ALL
CHECK	3/4"	CHECK VALVE			ALL

REMARKS:
1. REFER TO DIVISION 22 SPECIFICATIONS FOR ALTERNATE MANUFCTURERS. PREBID PREAPPROVAL IS REQUIRED.
2. DESCRIPTION TO TAKE PRECEDENCE OVER MODEL NUMBER.

COA#: 5338 Expires 06/30/2023
520 West Broadway Avenue Suite 101
Broken Arrow, Oklahoma 74012

918.895.6510 p
hpengineeringinc.com/

HP ENGINEERING

THE MCKINNEY PARTNERSHIP
architects

3600 West Main
Suite 200
Norman, Oklahoma
73072
405.360.1400 p
405.364.8287 f
tmparch.com

Copyright © 2022 The McKinney Partnership Architects, P.C., All Rights Reserved

Seal:

PROFESSIONAL ENGINEER
Nic Millard
23394
OKLAHOMA
11/18/22

Project:

City of Norman
Municipal Complex Renovation
Municipal Court
321 N. Webster Avenue
Norman, OK

Issue Date:
11/18/22 ISSUED FOR BIDDING

Revisions:

Project Number:
CM083319 (201253R)

Sheet Title:
PLUMBING SCHEDULES

Sheet Number:
P6.1

Autodesk Docs://201188K Norman Courthouse/221188K CoN County Courthouse.rvt
11/18/2022 5:35:55 PM

GENERAL MECHANICAL SYMBOLS

- REVISION NUMBER - SHOWN ON PLANS
- POINT WHERE NEW CONNECTS TO EXISTING
- NUMBER OF DETAIL ON SHEET
- NUMBER OF SHEET WHERE DETAIL APPEARS
- KEYNOTE
- CONTINUATION SYMBOL
- Room 5 — ROOM NAME AND NUMBER
- ITEM TO BE DEMOLISHED
- AREA NOT IN CONTRACT
- 2" — PIPE SIZE TAG (DIAMETER)
- ABOVE GROUND PIPING
- 1/8" / 12" SLOPE — PIPE SLOPE TAG
- BELOW GROUND PIPING
- INVERT: -105' - 1" — PIPE INVERT ELEVATION TAG
- (E) — EXISTING PIPE TAG
- PIPING BEING DEMOLISHED

ABBREVIATIONS

Ø	ROUND	LVR	LOUVER
ABV	ABOVE	MAX	MAXIMUM
AD	AREA DRAIN	MD	MOTORIZED DAMPER
ADD	ADDENDUM	MECH	MECHANICAL
AFF	ABOVE FINISHED FLOOR	MFR	MANUFACTURER
ALT	ALTERNATE	MIN	MINIMUM
AP	ACCESS PANEL	MISC	MISCELLANEOUS
ARCH	ARCHITECT/ARCHITECTURAL	MTR	MOTOR
BFF	BELOW FINISHED FLOOR	NC	NORMALLY CLOSED
BLW	BELOW	NIC	NOT IN CONTRACT
CAP	CAPACITY	NO	NUMBER
CB	CATCH BASIN	NO	NORMALLY OPEN
CLG	CEILING	NTS	NOT TO SCALE
CO	CLEAN OUT	PD	PRESSURE DROP
CW	COLD WATER	PIV	POST INDICATOR VALVE
D	DEGREE	PRESS	PRESSURE
DIA	DIAMETER	PRV	PRESSURE REDUCING VALVE
DN	DOWN	PSI	POUNDS PER SQUARE INCH
EA	EACH	PSIG	POUNDS PER SQUARE INCH GAUGE
ELEC	ELECTRICAL	PWR	POWER
EQUIP	EQUIPMENT	REC	RECESSED
E/A	EXHAUST AIR	RED	REDUCER
F	DEGREES FAHRENHEIT	RM	ROOM
FD	FLOOR DRAIN	RPM	REVOLUTIONS PER MINUTE
FDC	FIRE DEPARTMENT CONNECTION	SF	SQUARE FOOT
FL	FLOOR	SAN	SANITARY
FO	FUEL OIL	SF	SQUARE FOOT
FOV	FUEL OIL VENT	SD	SMOKE DAMPER
FOR	FUEL OIL RETURN	SM	SURFACE MOUNT
FOS	FUEL OIL SUPPLY	SP	STANDPIPE
FPM	FEET PER MINUTE	SP	STATIC PRESSURE
FT	FOOT/FEET	T	THERMOSTAT
GAL	GALLON	TD	TEMPERATURE DROP
GF	GAS-FIRED	TEMP	TEMPERATURE
GC	GENERAL CONTRACTOR	TYP	TYPICAL
GPM	GALLONS PER MINUTE	UG	UNDERGROUND
HB	HOSE BIB	V	VENT
HP	HORSE POWER	VENT	VENTILATION
HTR	HEATER	W	WASTE
HYD	HYDRANT	WH	WALL HYDRANT
ID	INDIRECT		
IN	INCH		
INV	INVERT		
LB	POUND		

EQUIPMENT ABBREVIATIONS

AC	AIR CONDITIONING UNIT	ET	EXPANSION TANK
ACCU	AIR COOLING CONDENSING UNIT	EWH	ELECTRIC WATER HEATER
AHU	AIR HANDLING UNIT	FCU	FAN COIL UNIT
AS	AIR SEPARATOR	FP	FIRE PUMP
B	BOILER	GI	GREASE INTERCEPTOR
CH	CHILLER	GRV	GRAVITY ROOF VENTILATOR
CT	COOLING TOWER	HWP	HEATING WATER PUMP
CUH	CABINET UNIT HEATER	HRU	HEAT RECOVERY UNIT
CHWP	CHILLED WATER PUMP	PRV	POWER ROOF VENTILATOR
DBP	DOMESTIC WATER BOOSTER PUMP	RE	RETURN/EXHAUST FAN
DC	DUCT MOUNTED COIL	RTU	ROOFTOP UNIT
DCP	DOMESTIC WATER CIRCULATING PUMP	SP	SUMP PUMP
EF	EXHAUST FAN	UH	UNIT HEATER
EDC	ELECTRIC DUCT COIL	WH	WATER HEATER

* NOTE *

ALL OF GENERAL NOTES ON THIS SHEET ARE TO BE APPLIED TO ALL OTHER DRAWINGS IN THIS SET.THE SYMBOLS AND ABBREVIATIONS SHOWN ON THIS SHEET MAY OR MAY NOT BE USED IN THIS SET OF DRAWINGS.

FIRE PROTECTION SYMBOLS

- FP-D — FIRE PROTECTION DRY
- FP-O — FIRE PROTECTION OTHER
- FP-PA — FIRE PROTECTION PRE-ACTION
- FP-W — FIRE PROTECTION WET
- FP-DOM-W — COMBINATION FIRE & DOMESTIC
- UPRIGHT SPRINKLER HEAD
- PENDENT SPRINKLER HEAD
- RECESSED SPRINKLER HEAD
- CONCEALED SPRINKLER HEAD
- D — DRY SPRINKLER HEAD
- SIDEWALL SPRINKLER HEAD
- EXTENDED COVERAGE SIDEWALL SPRINKLER HEAD
- 48"x18" S/A — OBSTRUCTION FROM DUCTWORK 48" AND GREATER
- PIPE DROP
- PIPE RISE
- PIPE TEE
- CAP
- 4" 2" — PLUG
- 4" — REDUCING 45 DEGREE TEE
- 45 DEGREE TEE

PIPE ACCESSORY TAGS

- WM — 2" DOM. WM DOMESTIC WATER METER
- 2" BALANCING BALANCING VALVE
- 2" SHUTOFF 1/4 TURN BALL VALVE
- 2" CHECK CHECK VALVE
- 2" TMV 3-WAY MIXING VALVE
- ALARM CHECK VALVE
- DRY PIPE VALVE
- FREESTANDING SIAMESE FIRE DEPARTMENT CONNECTION
- INDICATING BUTTERFLY VALVE
- OS&Y VALVE
- PREACTION VALVE
- FIRE DAMPER
- CHECK VALVE
- M — 2" M-CNTRL MOTORIZED CONTROL VALVE
- M — 2" 3-WAY CNTRL 3 WAY MOTORIZED CONTROL VALVE
- 2" PRV PRESSURE REDUCING VALVE
- S — 3/8" SOLENOID REFRIGERANT SOLENOID VALVE
- 2" BUTTERFLY BUTTERFLY VALVE
- FIRE SMOKE DAMPER
- POST INDICATOR VALVE
- RISER
- SIAMESE FIRE DEPARTMENT CONNECTION
- SINGLE FIRE DEPARTMENT CONNECTION
- CHECK VALVE
- CHECK VALVE

GENERAL FIRE SPRINKLER NOTES

1. RUN ALL PIPING PARALLEL OR PERPENDICULAR TO STRUCTURE IN ALL AREAS. SPRINKLER CONTRACTOR SHALL COORDINATE LOCATION OF HORIZONTAL SPRINKLER PIPING WITH OTHER TRADES TO MISS ALL LIGHT FIXTURES, DUCTS, VAV BOXES, AIR DIFFUSERS AND ALL OTHER ITEMS WHERE CEILING CLEARANCES ARE CLOSE.
2. DESIGN, FABRICATE, INSTALL THE FIRE PROTECTION AUTOMATIC SPRINKLER SYSTEM IN AN ACCEPTABLE MANNER TO THE STATE HEALTH DEPARTMENT, LOCAL FIRE MARSHALL AND THE ARCHITECT/ENGINEER.
3. PAY ALL PERMITS, LICENSES, FEES, DEPOSITS AND CHARGES IN CONNECTION WITH THE WORK, EXCEPT AS NOTED HEREIN. SECURE ALL NECESSARY APPROVALS.
4. DESIGN AND INSTALL THE SYSTEM PER THE REQUIREMENTS OF NFPA NO. 13. ALL DEFICIENCIES SHALL BE THE RESPONSIBILITY OF THE SPRINKLER CONTRACTOR AND ANY DEVIATIONS FROM THE REQUIREMENTS IN NFPA NO. 13 AND/OR THE APPROVED PLANS SHALL REQUIRE SPECIAL PERMISSION FROM THE ARCHITECT.
5. COMPLY WITH ALL RULES, REGULATIONS, LAWS AND ORDINANCES OF THE STATE, LOCAL, CITY OR COUNTY AUTHORITIES AND UTILITY COMPANIES.
6. THE AUTOMATIC SPRINKLER SYSTEM SHALL BE DESIGNED, FABRICATED, INSTALLED AND TESTED BY AN EXPERIENCED CONTRACTOR APPROVED BY THE ARCHITECT AND LICENSED BY THE STATE TO PERFORM SUCH WORK.
7. SUBMIT SHOP DRAWINGS TO THE ARCHITECT FOR APPROVAL. BEFORE BEING SENT TO THE ARCHITECT, ALL SHOP DRAWINGS MUST BEAR THE LOCAL FIRE MARSHALL'S STAMP OF APPROVAL.
8. SUBMIT COMPLETE LAYOUT DRAWING OF OVERHEAD SPRINKLER SYSTEM AND RELATED EQUIPMENT INDICATING RELATIONSHIP OF ALL THE OVERHEAD ITEMS INCLUDING CEILING AIR DIFFUSERS, LIGHTING FIXTURES, BEAMS AND ALL OTHER ITEMS. ALL SPRINKLER HEADS SHALL BE SPACED PER NFPA.
9. SUBMIT COMPLETE DETAILS AND SECTIONS TO CLEARLY DEFINE AND CLARIFY THE DESIGN, INCLUDING A LIST OF MATERIALS DESCRIBING ALL PROPOSED MATERIALS WITH MANUFACTURER'S NAME AND CATALOG NUMBER.
10. PROVIDE SPRINKLER HEAD(S) FOR EACH ROOM/SPACE FOR COMPLETE PROTECTION.
11. UPON COMPLETION OF THE SPRINKLER SYSTEM INSTALLATION, TEST AND RE-TEST THE COMPLETE INSTALLATION AND MAKE ALL CORRECTIONS AS NECESSARY TO SECURE ACCEPTANCE BY FIRE MARSHALL. FURNISH ALL TEST EQUIPMENT AND PERSONNEL REQUIRED.
12. AFTER THE FIRE SPRINKLER SYSTEM HAS BEEN COMPLETELY TESTED, INSPECTED AND APPROVED, SECURE A LETTER OF FINAL ACCEPTANCE FROM THE ADMINISTRATIVE AUTHORITY ADDRESSED TO THE SPRINKLER COMPANY RESPONSIBLE FOR THE INSTALLATION, PREPARED IN TRIPLICATE. DELIVER ALL THREE COPIES TO THE ARCHITECT.
13. UNDERWRITERS LABORATORIES (UL) AND/OR FACTORY MUTUAL RESEARCH CORPORATION (FMRC) APPROVED EQUIPMENT SHOULD BE UTILIZED WHERE APPLICABLE, AND THE DETAILS OF THE INSTALLATION SHOULD CONFORM TO FACTORY MUTUAL ENGINEERING ASSOCIATION (FMEA) GOOD PRACTICES.
14. A CORROSIVE-RESISTANT PLACARD SHALL BE PLACED ON THE BASE OF THE RISER STATING THE DESIGN CRITERIA AND RESULTING DEMAND AT THE BASE OF THE RISER, INCLUDING HOSE STREAM ALLOWANCES, ALL PIPING, FITTINGS, HANGERS, VALVES, AND DEVICES ARE TO COMPLY WITH NFPA NO. 13.
15. ALL PIPES SHALL MEET OR EXCEED CORROSION RESISTANCE RATIO OF SCHEDULE 40 STEEL PIPE. FIELD COORDINATION IS REQUIRED ESPECIALLY WHEN CUTTING OR ADJUSTING PIPES FOR SPRINKLER INSTALLATION. AS PER THE REQUIREMENTS OF THE DEPARTMENT OF HEALTH, ALL UNDERGROUND PIPING IS TO BE CHLORINATED.
16. FLOW AND TAMPER SWITCHES SHALL BE PROVIDED BY FIRE ALARM CONTRACTOR AND INSTALLED BY SPRINKLER CONTRACTOR. WIRING SHALL BE PROVIDED BY FIRE ALARM CONTRACTOR. EXPOSED SPRINKLER PIPING SHALL BE PAINTED, COLOR SHALL BE SPECIFIED BY ARCHITECT.
17. PROVIDE COMPONENTS FOR FULL FLOW TESTING OF BACKFLOW DEVICE.
18. IN AREAS SUBJECT TO FREEZING, PROVIDE DRY SPRINKLER SYSTEM OR COORDINATE WITH MECHANICAL SUBCONTRACTOR TO PROVIDE HEATING EQUPMENT TO MAINTAIN ANY SPACES AT 40°F OR ABOVE.
19. FURNISH SPRINKLERS WITH FACTORY WHITE FINISH UNLESS NOTED OTHERWISE.
20. CONTRACTOR SHALL PROVIDE QUICK RESPONSE, FULLY RECESSED SPRINKLER HEADS UNLESS NOTED OTHERWISE.
21. FIRE CONTRACTOR SHALL PROVIDE AS AN ADD ALTERNATE BID: HAVE A FLOW TEST DONE FOR THE FIRE SUPPRESSION TO DETERMINE IF A BOOSTER PUMP WILL BE REQUIRED. IF ONE IS REQUIRED, CONTRACTOR SHALL PROVIDE IT. COORDINATE ELECTRICAL REQUIREMENTS WITH THE ELECTRICAL CONTRACTOR.

FIRE PROTECTION GENERAL NOTES

A PROVIDE A COMPLETE WET TYPE FIRE PROTECTION SYSTEM AS REQUIRED TO ACCOMMODATE THE FLOOR PLAN AND CEILING TYPES INCLUDING MAINS, BRANCHES, HEADS, VALVES, AND ACCESSORIES AS REQUIRED. THE SYSTEM SHALL BE INSTALLED ACCORDING TO MANUFACTURER'S SPECIFICATIONS AND RECOMMENDATIONS OF THE STATE BUILDING CODE, LOCAL FIRE DEPARTMENT, AND ALL FEDERAL, STATE, AND LOCAL AUTHORITIES, NFPA, AND FACTORY MUTUAL.

B THIS CONTRACTOR SHALL PREPARE HYDRAULIC CALCULATIONS BASED UPON THE CONFIGURATION OF THE ACTUAL SYSTEM DESIGN AS SHOWN ON THIS CONTRACTOR'S SHOP DRAWINGS.

C THIS DRAWING INDICATES A GENERAL PIPING ARRANGEMENT AND SUGGESTED SIZING ONLY. THIS CONTRACTOR SHALL DETERMINE THE ACTUAL PIPE SIZING REQUIRED AND COORDINATE WORK WITH ALL OTHER TRADES TO AVOID CONFLICTS.

D ROUTE SPRINKLER PIPING SUCH THAT IT DOES NOT RUN ABOVE ELECTRICAL PANELS, SWITCHGEAR, OR SIMILAR EQUIPMENT. SPRINKLER MAINS SHALL NOT RUN THROUGH ELECTRICAL OR COMMUNICATION ROOMS SUCH AS IT 139 OR A/V 119. SPRINKLER HEADS IN THESE ROOMS SHALL BE SERVED BY A DEDICATED BRANCH LINE FOR EACH ROOM.

E THE SPRINKLER SYSTEM SHALL BE DESIGNED BASED UPON ACTUAL WATER FLOW TEST DATA OBTAINED AT OR NEAR THE JOB SITE.

F REFER TO REFLECTED CEILING PLANS FOR ADDITIONAL INFORMATION REGARDING SPRINKLER HEAD LOCATION AND PIPE, UNLESS NOTED OTHERWISE.

G DIVISION 21 CONTRACTOR SHALL COORDINATE WITH THE ELECTRICAL CONTRACTOR FOR PROPER INSTALLATION OF THE FIRE PROTECTION SYSTEMS ALARM DEVICES INVOLVED WITH FIRE SPRINKLER SYSTEM.

H ALL SPRINKLER SYSTEM PIPING SHALL BE CONCEALED ABOVE THE SUSPENDED CEILING SYSTEM, UNLESS NOTED OTHERWISE. WRITTEN AUTHORIZATION SHALL BE OBTAINED FROM THE ARCHITECT PRIOR TO EXPOSING ANY PIPING IN ANY ROOM WHICH HAS A SUSPENDED CEILING.

J THIS CONTRACTOR SHALL PROVIDE ALL ADDITIONAL SPRINKLER HEADS AS REQUIRED TO ENSURE AN APPROVED FIRE PROTECTION SYSTEM AT NO ADDITIONAL COST TO THE OWNER.

K AUXILIARY DRAINS SHALL BE EXPOSED WITH 1" DRAIN VALVES. WHEN 5 OR MORE GALLONS ARE TRAPPED, THIS CONTRACTOR SHALL PROVIDE FIXED PIPING TO AN ADEQUATELY SIZED RECEPTOR WHICH IS CAPABLE OF ACCEPTING THE FULL FLOW OF THE DRAIN. WHEN LESS THAN 5 GALLONS ARE TRAPPED, A HOSE BIB SHALL BE PROVIDED AT THE DRAIN VALVE.

L AUXILIARY DRAINS SHALL NOT BE LOCATED ABOVE PLASTER OR GYPSUM BOARD CEILING SYSTEMS. ONLY BY A SPECIFIC WRITTEN INSTRUCTION FROM THE ENGINEER WILL A VARIANCE BE PROVIDED.

M AN INSPECTOR'S TEST CONNECTION SHALL BE PROVIDED FOR EACH FIRE SPRINKLER ZONE. THIS CONTRACTOR SHALL PROVIDE FIXED PIPING FROM THE TEST CONNECTION TO AN ADEQUATELY SIZED RECEPTOR WHICH IS CAPABLE OF ACCEPTING THE FULL FLOW OF THE TEST. EXTERIOR DISCHARGE OF THE TEST CONNECTION SHALL BE PERMITTED ONLY BY SPECIFIC WRITTEN INSTRUCTION FROM THE ENGINEER.

N SHOW ALL ROOM NUMBERS ON SHOP DRAWING PLANS.

O CONTRACTOR SHALL COORDINATE WITH CIVIL ENGINEER AND IS RESPONSIBLE FOR SUBMITTING FLOW TEST FOR UTLITY MAIN. IF PRESSURE IS BELOW 60 PSI AND 2000 GPM, FOLLOW UP WITH DESIGN TEAM.

MECHANICAL SHEET INDEX

FP0.1 FIRE PROTECTION TITLE SHEET
FP1.1 FLOOR PLAN - FIRE PROTECTION

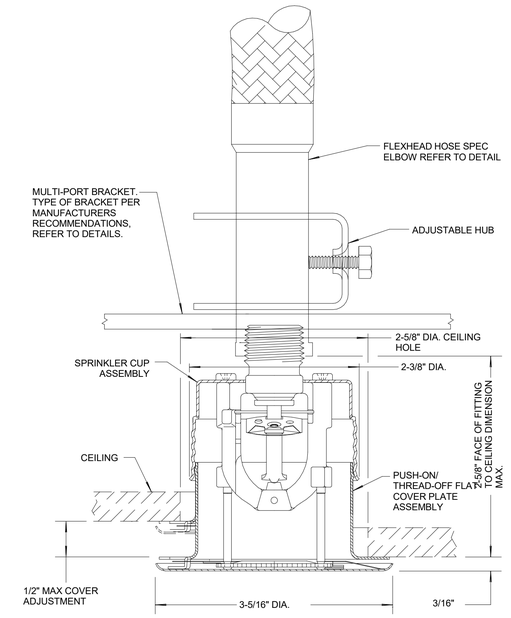

4 / FP0.1 CONCEALED SPRINKLER HEAD W/ FLEXIBLE HOSE CONNECTION
NOT TO SCALE

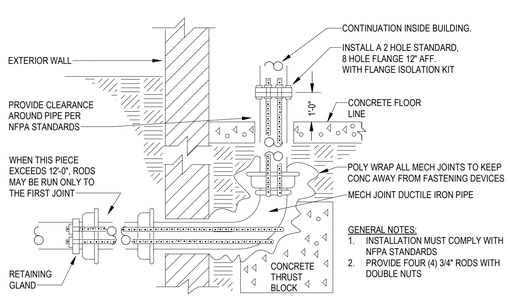

GENERAL NOTES:
1. INSTALLATION MUST COMPLY WITH NFPA STANDARDS
2. PROVIDE FOUR (4) 3/4" RODS WITH DOUBLE NUTS

NOTE: ACCEPTABLE ALTERNATIVE TO MECHANICAL JOINTS AND FITTINGS FOR LEAD-IN PIPING IS STAINLESS STEEL, SINGLE PIECE 90 DEGREE FITTING AS DESCRIBED IN SPECIFICATION.

1 / FP0.1 WATER SERVICE LINE EXTENSION DETAIL
NOT TO SCALE

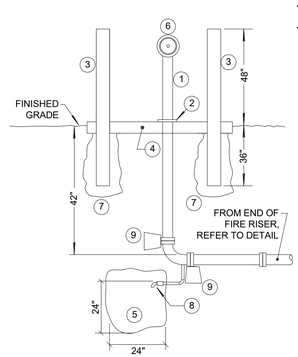

REMOTE STORZ FDC KEYED NOTES

1. PRIME AND PAINT WITH (1) COAT OF PRIMER AND (2) COATS OF RED ENAMEL PAINT. ATTACH 1-1/2" WIDE WHITE REFLECTIVE TAPE ON 4 SIDES OF PIPE EVENLY SPACE
2. IDENTIFICATION PLATE
3. 6" DUCTILE IRON PIPE BALLARD FILLED WITH CONCRETE. (1) IN EACH CORNER OF CONCRETE PAD. PRIME AND PAINT WITH (1) COAT OF PRIMER AND (2) COATS OF FIRE RED ENAMEL PAINT. ATTACH 1-1/2" WIDE WHITE REFLECTIVE TAPE ON 4 SIDES OF PIPE EVENLY SPACE
4. 36"x36"x12" HIGH REINFORCED CONCRETE PAD WITH 3/8" REBAR ON 6" CENTER BOTH WAYS. CHAMFER EDGES.
5. PEA GRAVEL DRY WELL
6. REMOTE FIRE DEPARTMENT CONNECTION 48" OFF OF FINISH GRADE GUARDIAN FIRE EQUIPMENT 6600 SERIES FDC CONNECTIONS, FORGED ALUMINUM STORZ CAP WITH POWDER COAT FINISH AND GALVANIZED STEEL ELBOW, VERIFY CONNECTION TYPES WITH AHJ.
7. CONCRETE FOOTING FOR BALLARD, TYPICAL OF 4
8. POTTER ROEMER #5982 3/4" STRAIGHT AUTOMATIC DRAIN DEVICE
9. CONCRETE THRUST BLOCKS

2 / FP0.1 FIRE DEPARTMENT CONNECTION DETAIL
NOT TO SCALE

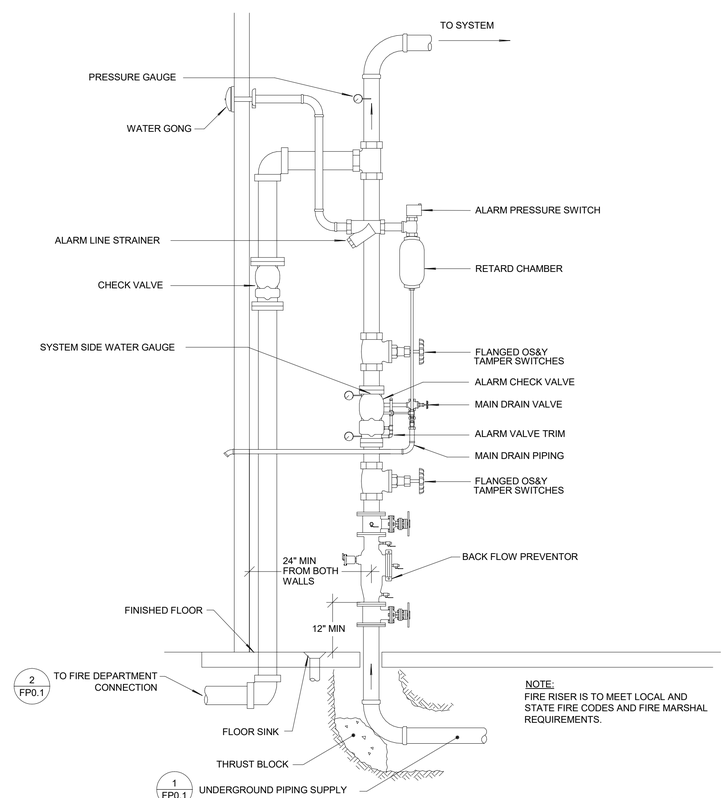

NOTE:
FIRE RISER IS TO MEET LOCAL AND STATE FIRE CODES AND FIRE MARSHAL REQUIREMENTS.

3 / FP0.1 FIRE PROTECTION RISER ASSEMBLY DETAIL
NOT TO SCALE

COA#: 5338 Expires 06/30/2023
520 West Broadway Avenue Suite 101
Broken Arrow, Oklahoma 74012

918.895.6510 p
hpengineeringinc.com/

HP ENGINEERING

THE MCKINNEY PARTNERSHIP
architects

3600 West Main
Suite 200
Norman, Oklahoma
73072
405.360.1400 p
405.364.8287 f
tmparch.com

Copyright: © 2022 The McKinney Partnership Architects, P.C., All Rights Reserved

Seal:

PROFESSIONAL ENGINEER LICENSED Nic Millard 23394 OKLAHOMA 11/18/22

Project:

City of Norman Municipal Complex Renovation

Municipal Court

321 N. Webster Avenue
Norman, OK

Issue Date:
11/18/22 ISSUED FOR BIDDING

Revisions:

Project Number:
CM083319 (201253R)

Sheet Title:
FIRE PROTECTION TITLE SHEET

Sheet Number:
FP0.1

Autodesk Docs://201188K Norman Courthouse/221188K CoN County Courthouse.rvt
11/18/2022 5:34:41 PM

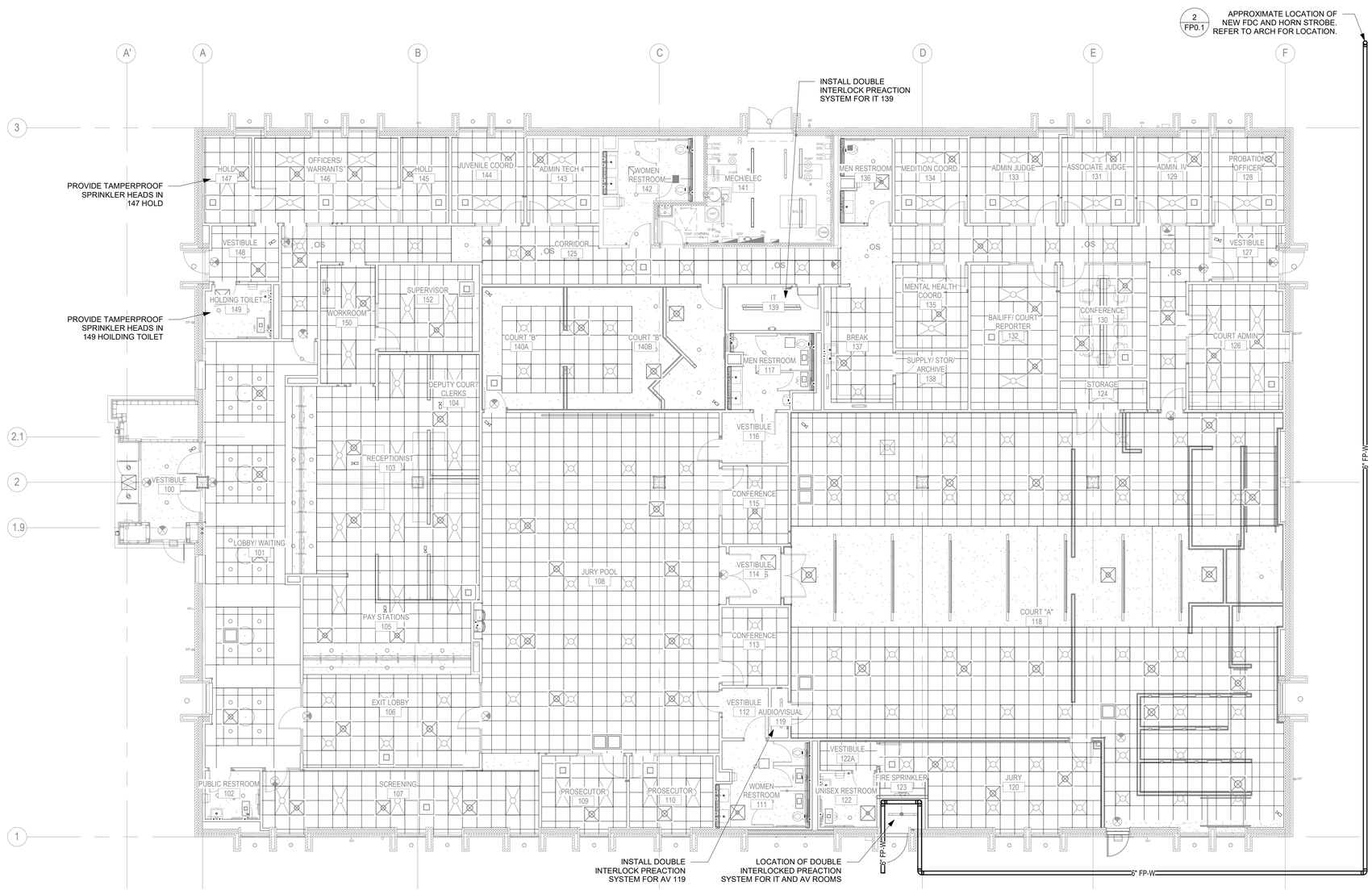

1 FP1.1 FIRE PROTECTION PLAN
1/8" = 1'-0"

THE MCKINNEY PARTNERSHIP
architects

3600 West Main
Suite 200
Norman, Oklahoma
73072
405.360.1400 p
405.364.8287 f
tmparch.com

Copyright © 2022 The McKinney Partnership Architects, P.C., All Rights Reserved

Seal:

PROFESSIONAL ENGINEER
Nic Millard
23394
OKLAHOMA
LICENSED
11/18/22

Project:

City of Norman Municipal Complex Renovation

Municipal Court

321 N. Webster Avenue
Norman, OK

Issue Date:
11/18/22 ISSUED FOR BIDDING

Revisions:

Project Number:
CM083319 (201253R)

Sheet Title:
FLOOR PLAN - FIRE PROTECTION

Sheet Number:
FP1.1

COA#: 5338 Expires 06/30/2023
520 West Broadway Avenue Suite 101
Broken Arrow, Oklahoma 74012

918.895.6510 p
hpengineeringinc.com/

HP ENGINEERING

Autodesk Docs://201188K Norman Courthouse/221188K CoN County Courthouse.rvt
11/18/2022 5:34:44 PM

ELEGEND 2020-06-24

TELECOMMUNICATIONS SYMBOLS

TELECOMMUNICATIONS

SYMBOL	DESCRIPTION	SYMBOL	DESCRIPTION	SYMBOL	DESCRIPTION
	COMMUNICATIONS OUTLET		CEILING COMMUNICATIONS OUTLET		FLOOR COMMUNICATIONS OUTLET
	SPECIAL SERVICES COMMUNICATIONS OUTLET		MUTOA - MULTI-USER TELECOMMUNICATIONS OUTLET ASSEMBLY	C-#-G / X	UNSHIELDED TWISTED PAIR COPPER CABLE - "C" INDICATES CATEGORY NUMBER "#" INDICATES NUMBER OF PAIRS "G" INDICATES AWG, "X" INDICATES CABLE NAME
	WIRELESS ACCESS POINT	X	CABLE SLACK ("X" INDICATES SLACK LENGTH)		
#-T / X	FIBER OPTIC CABLE ("#" INDICATES NUMBER OF STRANDS "T" INDICATES TYPE AND "X" INDICATES CABLE NAME)	XXX	CABLE PROTECTOR ("XXX" INDICATES NUMBER OF PROTECTORS)	X	CROSS-CONNECT FIELD
			CEILING MOUNTED DAS ANTENNA		SPLICE
	COMBINATION POWER/DATA FLOOR OUTLET		WALL MOUNTED DAS ANTENNA		MECHANICAL TERMINATION OF CABLE
AV	COMBINATION POWER/DATA/AV FLOOR OUTLET				

AUDIOVISUAL

SYMBOL	DESCRIPTION	SYMBOL	DESCRIPTION	SYMBOL	DESCRIPTION
S #	WALL/SURFACE MOUNTED LOUDSPEAKER ("#" INDICATES DEVICE TYPE IN SCHEDULE)	S #	CEILING MOUNTED LOUDSPEAKER ("#" INDICATES DEVICE TYPE IN SCHEDULE)	S #	GROUND/FLOOR MOUNTED LOUDSPEAKER ("#" INDICATES DEVICE TYPE IN SCHEDULE)
TV	TELEVISION/VIDEO OUTLET	V	VOLUME CONTROL	#	PROJECTOR ("#" INDICATES DEVICE TYPE IN SCHEDULE)
C	CALL IN SWITCH	M #	WALL MICROPHONE OUTLET ("#" INDICATES DEVICE TYPE IN SPECIFICATIONS)	#	CEILING MOUNTED FLAT PANEL DISPLAY ("#" INDICATES DEVICE TYPE IN SCHEDULE)
AV #	AV WALL OUTLET ("#" INDICATES DEVICE TYPE IN SCHEDULE)	M #	FLOOR MICROPHONE OUTLET ("#" INDICATES DEVICE TYPE IN SPECIFICATIONS)	#	WALL MOUNTED FLAT PANEL DISPLAY ("#" INDICATES DEVICE TYPE IN SCHEDULE)
AV #	FLOOR AV OUTLET ("#" INDICATES DEVICE TYPE IN SCHEDULE)	AV S/F,#	AV CEILING OUTLET ("S/F" INDICATES SURFACE OR FLUSH MOUNTED "#" INDICATES DEVICE TYPE IN SCHEDULE)	#	FRONT/REAR PROJECTION SCREEN OR INTERACTIVE WHITEBOARD ("#" INDICATES DEVICE TYPE IN SCHEDULE)
RS #	AV ROOM SCHEDULER ("#" INDICATES DEVICE TYPE IN SPECIFICATIONS)	CP #	AV CONTROL PANEL ("#" INDICATES DEVICE TYPE IN SPECIFICATIONS)	# AV	AV CAMERA ("#" INDICATES DEVICE TYPE IN SPECIFICATIONS)
#,D	AV BACKBOX, ("#" INDICATES TYPE IN SCHEDULE) ("#D" INDICATES # OF DATA CABLES)	#	AV CEILING BACKBOX, ("#" INDICATES TYPE IN SCHEDULE) ("#D" INDICATES # OF DATA CABLES)		

SECURITY

SYMBOL	DESCRIPTION	SYMBOL	DESCRIPTION	SYMBOL	DESCRIPTION
XX	WALL MOUNT MOTION SENSOR (90=90°, 180=180°, NB=NARROW BEAM)	E	POINT OF CONNECTION FOR 120VAC BY ELECTRICAL CONTRACTOR	KP	SECURITY KEYPAD DEVICE
	CEILING MOUNT MOTION SENSOR	GB	GLASS BREAK SENSOR	KS	KEY SWITCH
	SOUNDER	IC S,M	INTERCOM STATION ("S" SUBSTATION, "M" MASTER STATION)	PS	DOOR LOCK POWER SUPPLY
	STROBE	J S	JUNCTION BOX FOR SPECIALTY SECURITY SENSOR	RA	REMOTE ANNUNCIATOR DEVICE
M	ACCESS CONTROL DEVICE LOCATION "M" INDICATES MULLION MOUNT	G,D	AUTOMATIC OPERATOR CONNECTION POINT ('G' GATE, 'D' DOOR)	RQE M,P	REQUEST TO EXIT DEVICE ("M" MOTION SENSOR, "P" PUSH BUTTON)
		#	FIXED BOX CAMERA ("#" INDICATES NUMBER IN SCHEDULE)	SEC	SECURITY EQUIPMENT CABINET(S), TYPE AND QUANTITY MAY VARY FROM WALL MOUNTED, FREE STANDING RACKS, OR EXTERIOR RATED, REFER TO DETAILS
	ELECTRONICALLY CONTROLLED AND MONITORED DOOR LOCATION (REFER TO ACCESS CONTROL OPENING SCHEDULE)	#	FIXED DOME CAMERA ("#" INDICATES NUMBER IN SCHEDULE)		
	MONITORED DOOR LOCATION (REFER TO ACCESS CONTROL OPENING SCHEDULE)	P/D	SECURITY PUSH BUTTON - ("P/D" INDICATES PANIC ALARM OR DOOR RELEASE)	#	PTZ DOME CAMERA ("#" INDICATES NUMBER IN SCHEDULE)

PATHWAYS

SYMBOL	DESCRIPTION	SYMBOL	DESCRIPTION	SYMBOL	DESCRIPTION
	GROUND BAR		CONDUIT SLEEVE WITH BUSHINGS		DISTRIBUTION RINGS
	WALL MOUNT TELECOMMUNICATIONS EQUIPMENT	-J-J-J-J-	J-HOOK STYLE CABLE HANGERS		CABLE TRAY DROP OUT
#	CABLE TRAY ("#" INDICATES TRAY DIMENSIONS)	#	CABLE RUNWAY ("#" INDICATES TRAY DIMENSIONS)	#	CABLE TRAY - SOLID BOTTOM ("#" INDICATES TRAY DIMENSIONS)
#	CABLE TRAY - WALL MOUNTED ("#" INDICATES TRAY DIMENSIONS)			#	EQUIPMENT RACK ("#" INDICATES RACK NO. AND FRONT OF RACK)

MISCELLANEOUS

SYMBOL	DESCRIPTION	SYMBOL	DESCRIPTION	SYMBOL	DESCRIPTION
	WALL MOUNTED CLOCK	C	CHIME	AQ	AQUASTAT
DF	DOUBLE FACE CLOCK	B	BUZZER	T	THERMOSTAT
S	COMBINATION CLOCK/SPEAKER UNIT		ELECTRIC SOLENOID VALVE		BELL
ARCM	AREA OF RESCUE COMMUNICATION SYSTEM MASTER UNIT	ARCR	AREA OF RESCUE COMMUNICATION SYSTEM REMOTE UNIT		

SUBSCRIPTS

SYMBOL	DESCRIPTION	SYMBOL	DESCRIPTION	SYMBOL	DESCRIPTION
EP	SUBSCRIPT "EP" APPLIED TO ANY SYMBOL INDICATES EXPLOSION PROOF, CLASS, GROUP AND DIVISION AS NOTED	K	SUBSCRIPT "K" ADDED TO ANY SYMBOL INDICATES KEY OPERATED	WP	SUBSCRIPT "WP" APPLIED TO ANY SYMBOL INDICATES WEATHERPROOF NEMA 3R OR EQUIVALENT
E	SUBSCRIPT "E" ADDED TO ANY SYMBOL INDICATES EXISTING	WG	SUBSCRIPT "WG" ADDED TO ANY SYMBOL INDICATES WIRE GUARD	P	SUBSCRIPT "P" ADDED TO ANY SYMBOL INDICATES PILOT LIGHT
PD	SUBSCRIPT "PD" ADDED TO ANY FLOOR OUTLET INDICATES PEDESTAL MOUNTED	AL	SUBSCRIPT "AL" ADDED TO ANY SYMBOL INDICATES ASSISTIVE LISTENING TRANSMITTER	NL	SUBSCRIPT "NL" ADDED TO ANY SYMBOL INDICATES AN UNSWITCHED LUMINAIRE OPERATING AS A NIGHT LIGHT
AC	SUBSCRIPT "AC" ADDED TO ANY SYMBOL INDICATES ABOVE COUNTER. LOCATE CENTER OF DEVICE 4" ABOVE COUNTER SURFACE OR WHERE PRESENT, 4" ABOVE BACKSPLASH. WHERE INDICATED ADJACENT TO LAVATORY WITHOUT COUNTER, LOCATE CENTER OF DEVICE 8" ABOVE RIM OF LAVATORY.				

SYMBOLS INDICATED HERE AND NOT USED IN THE CONTRACT DOCUMENTS DO NOT APPLY TO THIS PROJECT. ADDITIONAL SYMBOLS AND ABBREVIATIONS MAY BE INDICATED IN THE CONTRACT DOCUMENTS.

TECHNOLOGY GENERAL NOTES

COMMUNICATIONS CABLING NOTES:

1. INSTALL HORIZONTAL CABLES CONTINUOUS FROM WORK AREA OUTLET TO THE TELECOMMUNICATIONS ROOM, INSTALL BACKBONE CABLES CONTINUOUS FROM TELECOMMUNICATIONS ROOM TO TELECOMMUNICATIONS ROOM. DO NOT SPLICE TELECOMMUNICATION CABLES.
2. CABLE DAMAGED DURING ITS INSTALLATION WILL NOT BE ACCEPTED. CABLE DAMAGED SHALL BE REPLACED WITH NEW CABLE AT THE EXPENSE OF THE TELECOMMUNICATIONS SUBCONTRACTOR. DAMAGE INCLUDES PHYSICAL DAMAGE TO CABLE OR IMPROPER INSTALLATION PRACTICES, OR PAINTED/OVERSPRAYED CABLES.
3. COORDINATE FINAL LOCATION OF ALL WORK AREA OUTLETS WITH THE ARCHITECTURAL ELEVATIONS AND THE ELECTRICAL DRAWINGS.
4. SEE T SERIES DETAIL AND SCHEMATIC/RISER SHEETS FOR CABLING, FACEPLATE, GROUNDING AND PATHWAY RISERS.
5. SEE ELECTRICAL DRAWINGS FOR ADDITIONAL ROUGH-IN AND PATHWAY REQUIREMENTS.
6. COORDINATE WITH THE GENERAL CONTRACTOR AND PAINTING SUBCONTRACTOR SO THAT THE COMMUNICATIONS CABLES ARE NOT DIRECTLY PAINTED OR INDIRECTLY OVERSPRAYED. PAINTED COMMUNICATIONS CABLES WILL BE REPLACED AT THE EXPENSE OF THE TELECOMMUNICATIONS SUBCONTRACTOR.

CONSTRUCTION CABLING NOTES:

1. ALL DEBRIS SHALL BE CLEARED AND REMOVED FROM SITE ON A DAILY BASIS.
2. SURFACES AND MATERIALS DAMAGED DURING CONSTRUCTION, WILL BE REPAIRED AND FINISHED TO MATCH ORIGINAL CONDITIONS. PROTECT EQUIPMENT, AND FURNISHINGS WHERE CONSTRUCTION WILL CAUSE DUST, DEBRIS, AND POSSIBLE DAMAGE.
3. EXERCISE CARE WHEN REMOVING OR REPLACING SUSPENDED CEILING TILES. DAMAGED TILES SHALL BE REPLACED WITH NEW TILES. DAMAGE INCLUDES FINGERPRINTS ON NEW/EXISTING TILES.
4. ANY STAGING AREA USED BY THE TELECOMMUNICATIONS SUBCONTRACTOR SHALL BE RETURNED TO ORIGINAL CONDITION TO OWNER'S SATISFACTION. THE TELECOMMUNICATIONS SUBCONTRACTOR SHALL ARRANGE WITH THE GENERAL CONTRACTOR TO OBTAIN WORK TRAILER, MATERIAL STORAGE AND STAGING AND PARKING SPACE IF NEEDED. THE TELECOMMUNICATIONS SUBCONTRACTOR SHALL PROVIDE WORK TRAILER, SECURE STORAGE SPACE, PHONE LINES AND ANY OTHER SERVICE DEEMED NECESSARY. THE OWNER WILL NOT PROVIDE ANCILLARY SERVICES AT THE CONSTRUCTION SITE.
5. FIRESTOP ALL FLOOR, TRAY, AND WALL PENETRATIONS. SEE SPECIFICATIONS.
6. BOND ALL CABLE TRAYS UTILIZING CABLE TRAY MANUFACTURER'S RECOMMENDED HARDWARE WITH CONDUIT SLEEVES AND PATHWAYS. SEE SPECIFICATIONS.

RACK SYMBOL LEGEND

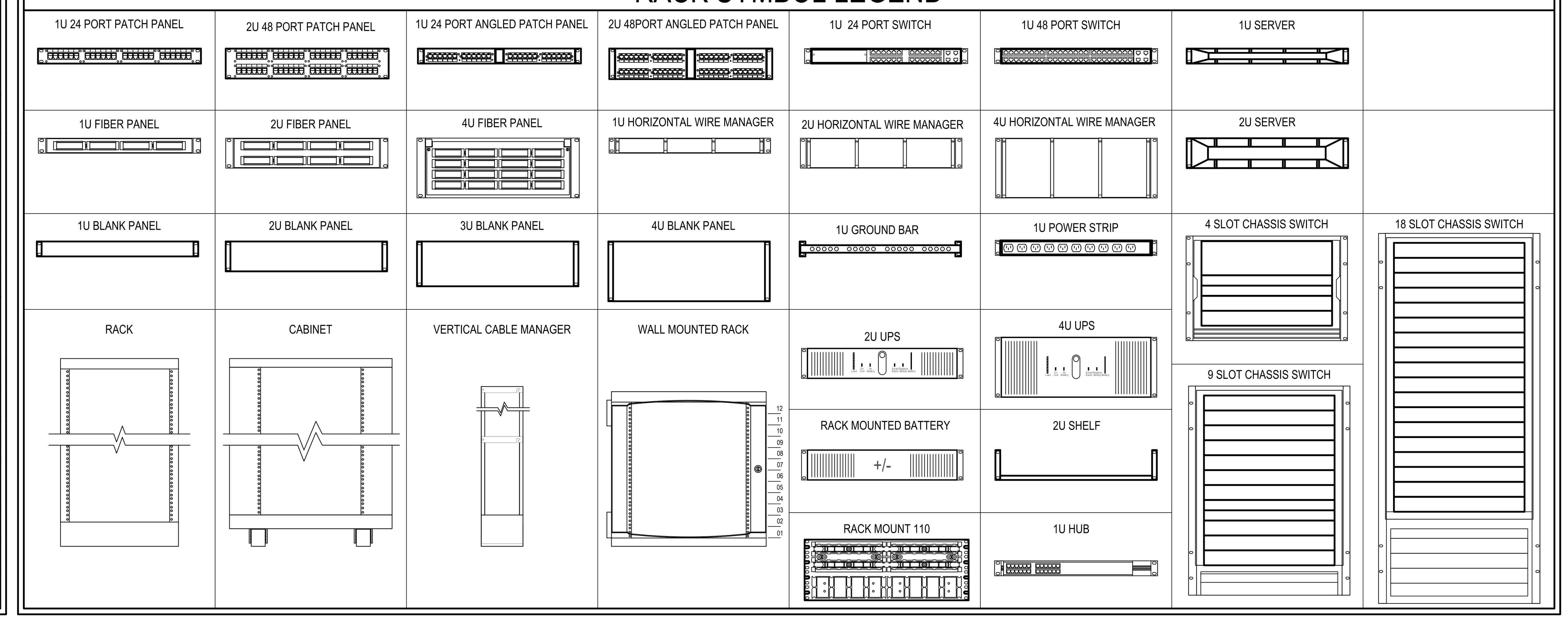

ABBREVIATIONS

A	AMP
AC	ALTERNATING CURRENT
ACEG	AC EQUIPMENT GROUND
AFF	ABOVE FINISHED FLOOR
AHJ	AUTHORITY HAVING JURISDICTION
ALF	ALUMINUM FRAME DOOR
APPROX	APPROXIMATELY
ASHRAE	AMERICAN SOCIETY OF HEATING, REFRIGERATING AND AIR-CONDITIONING ENGINEERS
ASME	AMERICAN SOCIETY OF MECHANICAL ENGINEERS
ASTM	STANDARD SPECIFICATIONS OF THE AMERICAN SOCIETY FOR TESTING MATERIALS
ATS	AUTOMATIC TRANSFER SWITCH
AUX	AUXILIARY
AV	ACID VENT, AUDIOVISUAL
AVG	AVERAGE
AVI	AUTOMATIC VEHICLE IDENTIFICATION
AW	ACID WASTE
AWG	AMERICAN WIRE GAUGE
BAS	BUILDING AUTOMATION SYSTEM
BFP	BACKFLOW PREVENTER
BICSI	BUILDING INDUSTRY CONSULTING SERVICE INTERNATIONAL
BLDG	BUILDING
BTC	BONDING CONDUCTOR FOR TELECOMMUNICATION
BTU	BRITISH THERMAL UNIT
BTUH	BRITISH THERMAL UNIT PER HOUR
C	CONDUIT
CAB	CABINET
CATV	CABLE TELEVISION
CB	CIRCUIT BREAKER
CCTV	CLOSED CIRCUIT TELEVISION
CFH	CUBIC FEET PER HOUR
CFM	CUBIC FEET PER MINUTE
CKT	CIRCUIT
CL	CENTER LINE
CLEC	COMPETITIVE LOCAL EXCHANGE CARRIER
CLG	CEILING
CLR	CLEAR
CM	COMMUNICATIONS CABLE
CMP	COMMUNICATIONS PLENUM CABLE
CMR	COMMUNICATIONS RISER CABLE
COAX	COAXIAL CABLE
CO-OSP	CUSTOMER OWNER-OUTSIDE PLANT
CPVC	CHLORINATED POLYVINYL CHLORIDE
CRAC	COMPUTER RM AIR CONDITIONER
CT	CABLE TRAY
CV	CONSTANT VOLUME
DAS	DISTRIBUTION ANTENNA SYSTEM
DD	DOUBLE DUCT
DIA	DIAMETER
DISC	DISCONNECT
DIST	DISTRIBUTION
DN	DOWN
DP	DEMARCATION POINT
DPS	DOOR POSITION SWITCH
DVR	DIGITAL VIDEO RECORDER
DWG	DRAWING
DX	DIRECT EXPANSION
EA	EXHAUST AIR
EAC	ELECTRONIC ACCESS CONTROL
EC	ELECTRICAL CONTRACTOR
EHC	ELECTRIC HEATING COIL
EL	ELEVATION
ELEC	ELECTRICAL
EMD	ESTIMATED MAXIMUM DEMAND
EMI	ELECTROMAGNETIC INTERFERENCE
EMS	ENERGY MANAGEMENT SYSTEM
EMT	ELECTRICAL METALLIC TUBING
EOA	ECONOMIZER OUTDOOR AIR
EPO	EMERGENCY POWER OFF
EQUIP	EQUIPMENT
ER	EQUIPMENT ROOM
EXH	EXHAUST
EXIST	EXISTING
F	FIRE WATER
FA	FIRE ALARM
FAA	FIRE ALARM ANNUNCIATOR PANEL
FACP	FIRE ALARM CONTROL PANEL
FB	FLOOR BOX
FCO	FLOOR CLEAN OUT
FDC	FIRE DEPARTMENT CONNECTION
FHC	FIRE HOSE CABINET
FL	FLOOR
FLA	FULL LOAD AMPS
FM	FACTORY MUTUAL ENGINEERING CORPORATION
FMG	FACTORY MUTUAL GLOBAL
FO	FIBER OPTIC
FOV	FIELD OF VIEW
FP	FIBER PANEL
FT	FEET
FURN	FURNISHED
FW	FILTERED WATER
GA	GAUGE
GALV	GALVANIZED
GC	GENERAL CONTRACTOR
GEC	GROUNDING ELECTRODE CONDUCTOR
GEN	GENERATOR
GFCI	GROUND FAULT CIRCUIT INTERRUPTER
GND	GROUND
GPM	GALLONS PER MINUTE
HGT	HEIGHT
HH	HANDHOLE
HMF	HOLLOW METAL FRAME DOOR
HP	HORSEPOWER
HTG	HEATING
HVAC	HEATING, VENTILATING AND AIR CONDITIONING
HZ	HERTZ
IC	INTERCOM
IDC	INSULATION DISPLACEMENT CONNECTOR
IDF	INTERMEDIATE DISTRIBUTION FRAME
IDS	INTRUSION DETECTION SYSTEM
IE	INVERT ELEVATION
IP	INTERNET PROTOCOL
ISP	INSIDE PLANT
J-BOX	JUNCTION BOX
KCMIL	THOUSAND CIRCULAR MILS
KV	KILOVOLT
KVA	KILOVOLT AMPERE
KW	KILOWATT
LAN	LOCAL AREA NETWORK
LBM	LATCH BOLT MONITOR
LBS	POUNDS
LEC	LOCAL EXCHANGE CARRIER
LTG	LIGHTING
MA	MIXED AIR
MATV	MASTER ANTENNA TELEVISION
(MAX)	MAXIMUM
MBH	1000 BTU/HOUR
MC	MAIN CROSS CONNECT
MCB	MAIN CIRCUIT BREAKER
MDF	MAIN DISTRIBUTION FRAME
MECH	MECHANICAL
MERV	MINIMUM EFFICIENCY REPORTING VALUE
(MIN)	MINIMUM
MISC	MISCELLANEOUS
MLO	MAIN LUGS ONLY
MM	MULTIMODE
MOA	MINIMUM OUTDOOR AIR
MPOE	MAIN POINT OF ENTRANCE
MTD	MOUNTED
MTG	MOUNTING
MUTOA	MULTI USER TELECOMMUNICATIONS OUTLET ASSEMBLY
NC	NORMALLY CLOSED
NEC	NATIONAL ELECTRICAL CODE
NEMA	NATIONAL ELECTRICAL MANUFACTURERS ASSOCIATION
NFPA	NATIONAL FIRE PROTECTION ASSOCIATION
NIC	NOT IN CONTRACT
NO	NORMALLY OPEN
NOM	NOMINAL
NPW	NON-POTABLE WATER
NTS	NOT TO SCALE
NVE	NETWORK VIDEO ENCODER
NVR	NETWORK VIDEO RECORDER
OA	OUTDOOR AIR
OC	ON CENTER
OPE	OWNER PROVIDED ELECTRONICS
OR	OPERATOR ROOM
OSP	OUTSIDE PLANT
PABX	PRIVATE AUTOMATIC BRANCH EXCHANGE
PB	PULLBOX
PBO	PROVIDE BY OTHERS
PBX	PRIVATE BRANCH EXCHANGE
PDU	POWER DISTRIBUTION UNIT
PERP	PERPENDICULAR
PIC	PLASTIC INSULATED CABLE
PIV	POST INDICATOR VALVE
PLBG	PLUMBING
PNL	PANEL
POE	POWER OVER ETHERNET
POP	POINT OF PRESENCE
PP	PATCH PANEL
PS	PLASTER SINK
PSF	POUNDS PER SQUARE FOOT
PSI	POUNDS PER SQUARE INCH
PSTN	PUBLIC SWITCH TELEPHONE NETWORK
PTZ	PAN-TILT-ZOOM
PVC	POLYVINYL CHLORIDE
PWR	POWER
RA	RETURN AIR
REQD	REQUIRED
RGS	RIGID GALVANIZED STEEL
RH	RELATIVE HUMIDITY
RLFA	RELIEF AIR
RM	ROOM
RO	REVERSE OSMOSIS WATER
RPBFP	REDUCED PRESSURE BACKFLOW PREVENTER
RQE	REQUEST TO EXIT
SA	SUPPLY AIR
SAN	SANITARY
SCH	SCHEDULE
SCTP	SCREENED TWISTED PAIR
SCW	SOFT COLD WATER
SHW	SOFT HOT WATER
(SIM)	SIMILAR
SLAB	SEALED LEAD ACID BATTERY
SM	SPRINKLER MAIN, SINGLE MODE
SMACNA	SHEET METAL AND AIR CONDITIONING CONTRACTORS' NATIONAL ASSOCIATION
SPD	SURGE PROTECTIVE DEVICE
SPECS	SPECIFICATIONS
SS	STAINLESS STEEL
SSI	SECURITY SYSTEMS INTEGRATOR
SSS	SURGEON SCRUB SINK
STD	STANDARD
STP	SHIELDED TWISTED PAIR
SW	SWITCH
SWBD	SWITCHBOARD
SWGR	SWITCHGEAR
T	TRANSFORMER
T-1	TRUNK LEVEL 1
TBB	TELECOMMUNICATIONS BONDING BACKBONE
TBBIBC	TELECOMMUNICATIONS BONDING BACKBONE INTERCONNECTING BONDING CONDUCTOR
TC	TELECOMMUNICATIONS CLOSET
TEL	TELEPHONE
TELECOM	TELECOMMUNICATIONS
TEMP	TEMPERATURE
TGB	TELECOMMUNICATIONS GROUNDING BUSBAR
TMGB	TELECOMMUNICATIONS MAIN GROUNDING BUSBAR
TR	TELECOMMUNICATIONS ROOM
TTB	TELEPHONE TERMINAL BOARD
TV	TELEVISION
TVSS	TRANSIENT VOLTAGE SURGE SUPPRESSION
(TYP)	TYPICAL
UG	UNDERGROUND
UL	UNDERWRITERS LABORATORY
UNO	UNLESS NOTED OTHERWISE
UPS	UNINTERRUPTIBLE POWER SUPPLY
UTP	UNSHIELDED TWISTED PAIR
V	VOLT
VERT	VERTICAL
VFC	VARIABLE FREQUENCY CONTROL
VOIP	VOICE OVER INTERNET PROTOCOL
VTR	VENT THROUGH ROOF
W	WATT
WAN	WIDE AREA NETWORK
WAP	WIRELESS ACCESS POINT
WG	WATER GUAGE
WMP	WIRE MANAGEMENT PANEL
WP	WEATHERPROOF
WSA	WIRE SIZING AMPS
WTH	WIRE TRANSFER HINGE
XFMR	TRANSFORMER

November 11, 2022 9:27 AM Tyler Bailey

© COPYRIGHT 2022 AE# 20208261
Permission to reproduce all or part of this drawing is hereby granted solely for the limited purpose of construction of this project or archiving. Unauthorized copying, disclosure or construction use without written permission of Alvine Engineering is prohibited by copyright law.

NOTE:
DO NOT SCALE DRAWINGS. VERIFY ALL DIMENSIONS and clearances from ARCHITECTURAL, STRUCTURAL, shop and other appropriate drawing or at site. lay out and coordinate all work prior to installation to provide clearances required for operation, maintenance, and codes and verify non-interference with other work. DO NOT FABRICATE PRIOR TO VERIFICATION OF CLEARANCE FOR ALL TRADES. READ SPECIFICATIONS.

IP DESIGN GROUP
CONSULTING + DESIGN
www.ipdesigngroup.com

THE MCKINNEY PARTNERSHIP
architects
3600 West Main
Suite 200
Norman, Oklahoma
73072
405.360.1400 p
405.364.8287 f
tmparch.com

Copyright © 2008 The McKinney Partnership Architects, P.C., All Rights Reserved

Seal:

Project:

City of Norman
Municipal Complex Renovation
Municipal Court
321 N. Webster Avenue
Norman, OK

Issue Date:
11/15/22 ISSUED FOR BIDDING

Revisions:

Project Number:
CM083319

Sheet Title:
TELECOM SYMBOLS AND ABBREVIATIONS

Sheet Number:
T0.0

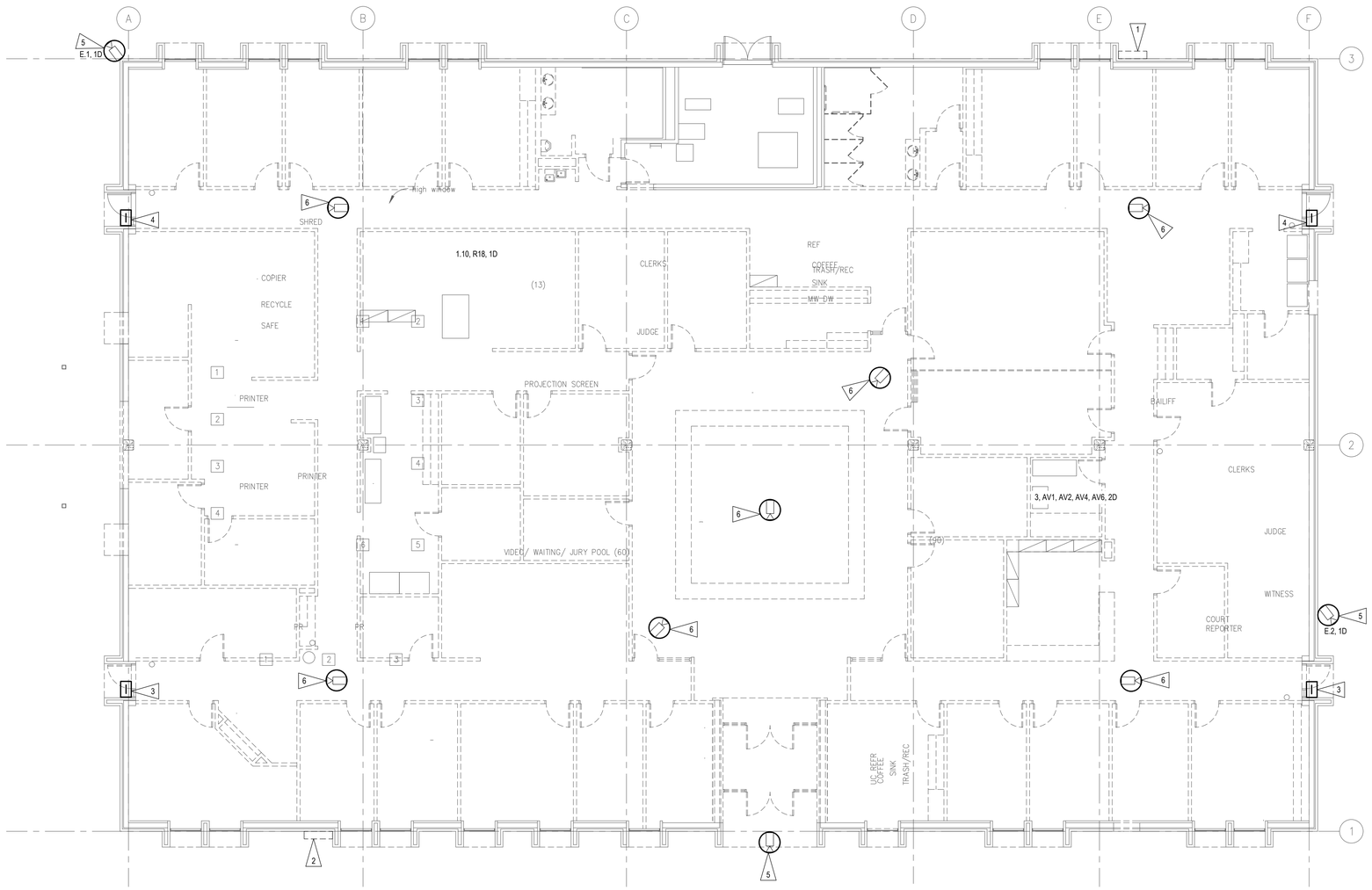

FIRST FLOOR DEMO PLAN - TELECOM

SCALE: 1/8" = 1'-0"

GENERAL NOTES

1. REFER TO SHEET T0.0 FOR TELECOM GENERAL CONSTRUCTION NOTES.
2. REFER TO SHEET SERIES T5 FOR TELECOM SCHEDULES.
3. REFER TO SHEET SERIES T3 FOR AUDIOVISUAL SCHEMATICS AND TELECOM RISERS.
4. REFER TO SHEET SERIES T4 FOR TELECOM DETAILS.

FLAG NOTES

1. EXISTING 3" CONDUIT FOR OM1/2 AND OM3 FIBER RING CONNECTED TO BUILDING B. PROTECT ALL DURING CONSTRUCTION.
2. EXISTING 3" CONDUIT FOR OM1/2 AND OM3 FIBER RING CONNECTED TO BUILDING C. COAX ENTRANCE LOCATED AT THIS LOCATION. PROTECT ALL DURING CONSTRUCTION.
3. EXISTING HID CARD READER AND DOOR CONTROLLER TO BE PROTECTED DURING CONSTRUCTION. THE CARD READER WILL BE RELOCATED TO A NEW DOOR AND THE DOOR CONTROLLER TO BE RELOCATED TO NEW IT ROOM. REFER TO ACCESS CONTROL SCHEDULE ON SHEET T5.1 FOR MORE DETAIL.
4. EXISTING HID CARD READER AND DOOR CONTROLLER TO BE PROTECTED DURING CONSTRUCTION. DOOR CONTROLLER TO BE RELOCATED TO NEW IT ROOM. REFER TO ACCESS CONTROL SCHEDULE ON SHEET T5.1 FOR MORE DETAIL.
5. EXISTING CAMERA TO REMAIN. EXISTING DATA CABLING TO BE DEMOLISHED. REFER TO NEW FLOOR PLAN FOR DATA CABLING REPLACEMENT.
6. EXISTING CAMERA TO BE PROTECTED DURING CONSTRUCTION AND RELOCATED. EXISTING DATA CABLING TO BE DEMOLISHED. REFER TO NEW FLOOR PLAN FOR DATA CABLING REPLACEMENT.

© COPYRIGHT 2022 AE# 20208261
Permission to reproduce all or part of this drawing is hereby granted solely for the limited purpose of construction of this project or archiving. Unauthorized copying, disclosure or construction use without written permission of Alvine Engineering is prohibited by copyright law.

NOTE:
DO NOT SCALE DRAWINGS. VERIFY ALL DIMENSIONS and clearances from ARCHITECTURAL, STRUCTURAL, shop and other appropriate drawing or at site. lay out and coordinate all work prior to installation to provide clearances required for operation, maintenance, and codes and verify non-interference with other work. DO NOT FABRICATE PRIOR TO VERIFICATION OF CLEARANCE FOR ALL TRADES. READ SPECIFICATIONS.

IP DESIGN GROUP
CONSULTING + DESIGN
www.ipdesigngroup.com

THE MCKINNEY PARTNERSHIP
architects
3600 West Main
Suite 200
Norman, Oklahoma
73072
405.360.1400 p
405.364.8287 f
tmparch.com

Copyright © 2008 The McKinney Partnership Architects, P.C., All Rights Reserved

Seal:

Project:

City of Normman
Municipal Complex Renovation
Municipal Court
321 N. Webster Avenue
Norman, OK

Issue Date:
11/15/22 ISSUED FOR BIDDING

Revisions:

Project Number:
CM083319

Sheet Title:
FIRST FLOOR DEMO PLAN - TELECOM

Sheet Number:
TD1.1

November 11, 2022 9:27 AM Tyler Bailey

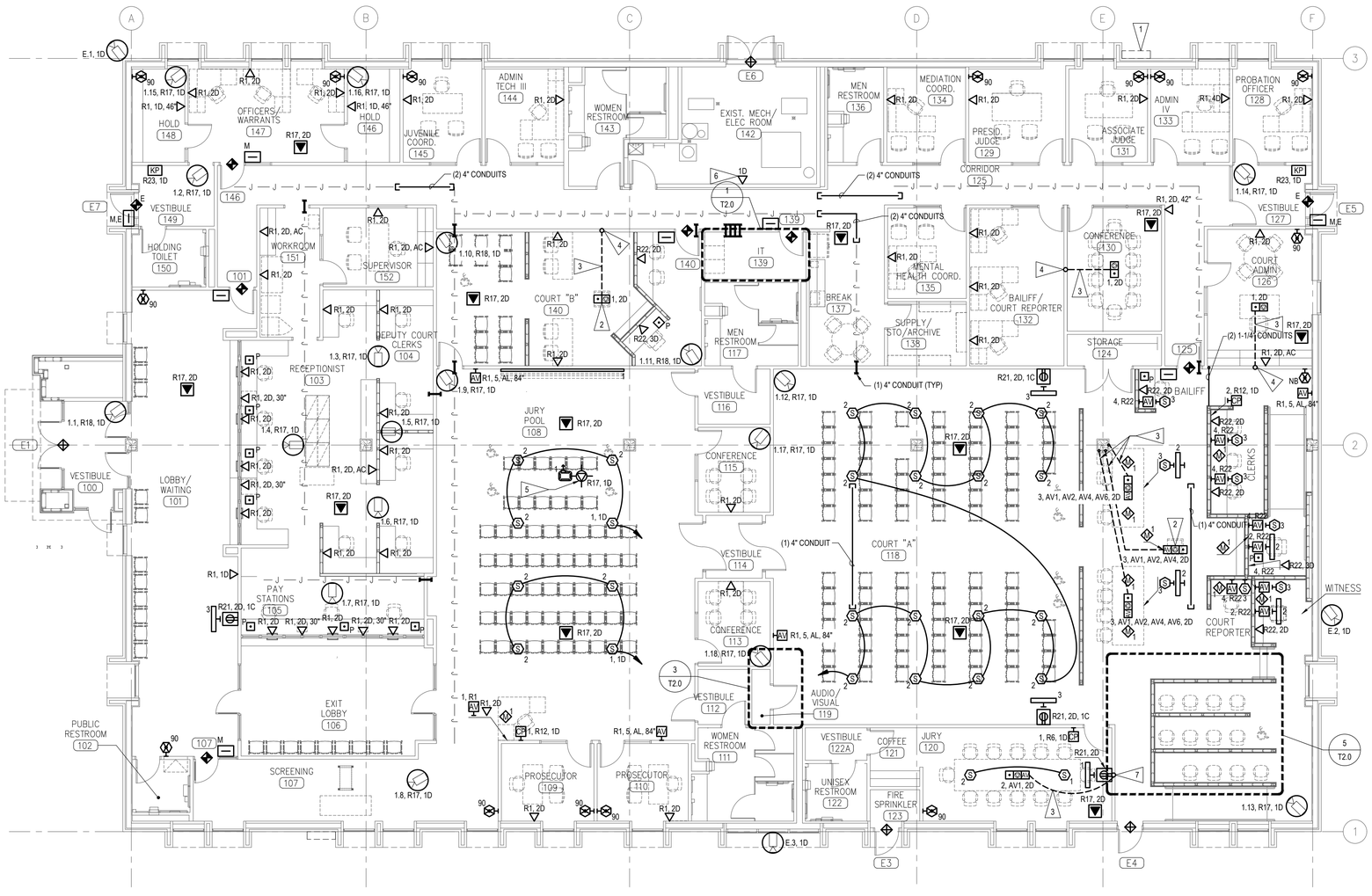

FIRST FLOOR PLAN - TELECOM

SCALE: 1/8" = 1'-0"

GENERAL NOTES

1. REFER TO SHEET T0.0 FOR TELECOM GENERAL CONSTRUCTION NOTES.
2. REFER TO SHEET SERIES T5 FOR TELECOM SCHEDULES.
3. REFER TO SHEET SERIES T3 FOR AUDIOVISUAL SCHEMATICS AND TELECOM RISERS.
4. REFER TO SHEET SERIES T4 FOR TELECOM DETAILS.

FLAG NOTES

1. EXISTING 3" CONDUIT FOR OM1/2 AND OM3 FIBER RING CONNECTED TO BUILDING B. PROTECT ALL DURING CONSTRUCTION.
2. PROVIDE TABLETOP BOX ALTINEX TNP125 WITH GROMMETED OPENING IN PODIUM.
3. REFER TO FLOOR BOX AND POKE THRU SCHEDULE FOR CONDUIT SIZES AND QUANTITIES.
4. STUB CONDUITS TO ABOVE ACCESSIBLE CEILING.
5. DATA CABLING FOR PROJECTOR.
6. TELECOMMUNICATIONS OUTLET FOR FACP. COORDINATE EXACT TERMINATION LOCATION AND INSTALLATION WITH FACP INSTALLER.
7. ROUTE CONDUIT TO DISPLAY BACK BOX. SEE DETAIL 2/T4.0.

© COPYRIGHT 2022 AE# 20208261
Permission to reproduce all or part of this drawing is hereby granted solely for the limited purpose of construction of this project or archiving. Unauthorized copying, disclosure or construction use without written permission of Alvine Engineering is prohibited by copyright law.

NOTE:
DO NOT SCALE DRAWINGS. VERIFY ALL DIMENSIONS and clearances from ARCHITECTURAL, STRUCTURAL, shop and other appropriate drawing or at site. lay out and coordinate all work prior to installation to provide clearances required for operation, maintenance, and codes and verify non-interference with other work. DO NOT FABRICATE PRIOR TO VERIFICATION OF CLEARANCE FOR ALL TRADES. READ SPECIFICATIONS.

IP DESIGN GROUP
CONSULTING + DESIGN
www.ipdesigngroup.com

THE MCKINNEY PARTNERSHIP architects
3600 West Main
Suite 200
Norman, Oklahoma
73072
405.360.1400 p
405.364.8287 f
tmparch.com

Copyright © 2008 The McKinney Partnership Architects, P.C., All Rights Reserved

Seal:

Project:

City of Norman
Municipal Complex Renovation
Municipal Court
321 N. Webster Avenue
Norman, OK

Issue Date:
11/15/22 ISSUED FOR BIDDING

Revisions:

Project Number:
CM083319

Sheet Title:
FLOOR PLAN - TELECOM

Sheet Number:
T1.1

November 11, 2022 9:27 AM Tyler Bailey

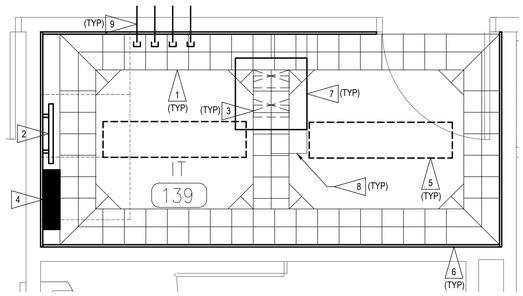

IT 139 ENLARGED FLOOR PLAN - TELECOM

1 / T2.0

SCALE: 1/2" = 1'-0"

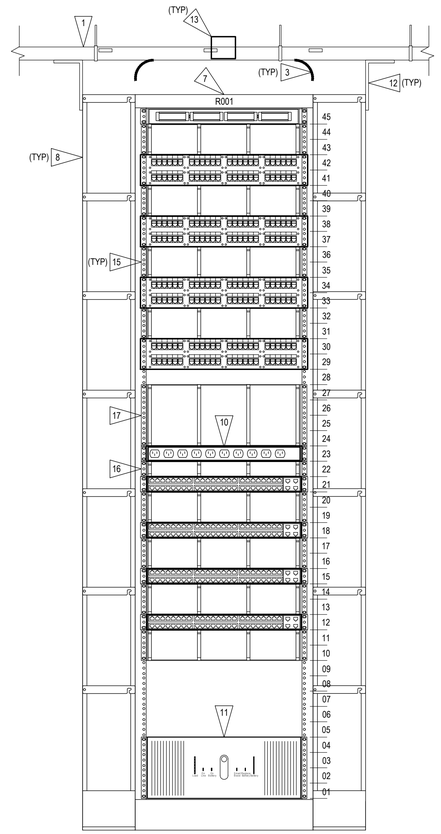

IT 139 RACK ELEVATION - TELECOM

2 / T2.0

NO SCALE

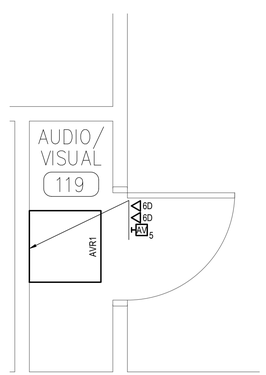

AUDIO/VISUAL 119 ENLARGED FLOOR PLAN - AUDIOVISUAL

3 / T2.0

SCALE: 1/2" = 1'-0"

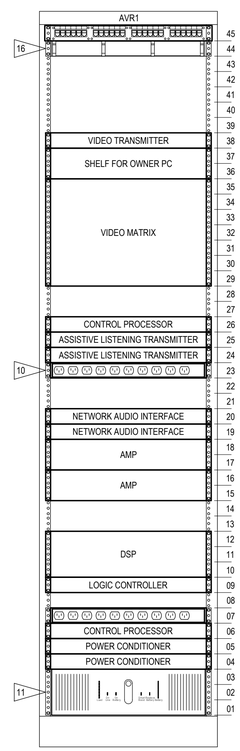

AUDIO/VISUAL 119 RACK ELEVATION - TELECOM

4 / T2.0

NO SCALE

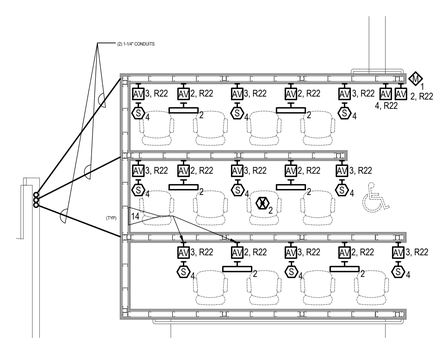

NOTES

1. REFER TO ARCHITECTURAL ELEVATIONS FOR EXACT DEVICE LOCATIONS AND MOUNTING HEIGHTS.

JURY BOX ENLARGED FLOOR PLAN - AUDIOVISUAL

5 / T2.0

SCALE: 1/4" = 1'-0"

GENERAL NOTES

1. SEE FLOOR PLANS FOR CONTINUATION OF CONDUITS AND CABLETRAY.
2. SEE FLOOR PLANS, GROUNDING SCHEMATICS, AND DETAILS FOR TELECOMMUNICATIONS GROUNDING.

FLAG NOTES

1. PROVIDE 12" WIDE LADDER RUNWAY. MOUNT AT 8'-0" AFF. USE MANUFACTURER'S WALL BRACKETS TO SUPPORT RUNWAY ON WALL. WHERE RUNWAY IS LOCATED DIRECTLY OVER EQUIPMENT RACKS, ANCHOR TRAY TO RACK. PROVIDE 6" RETAINING POSTS AT 18" ON CENTER ON BOTH SIDES OF THE LADDER RUNWAY. PROVIDE CORNER FITTINGS AND ALL ACCESSORIES FOR A COMPLETE SYSTEM. SEE DETAILS 5/T4.1 AND 10/T4.1.
2. PRIMARY BONDING BUSBAR (PBB) BY ELECTRICAL. BOND METALLIC PATHWAYS AND EQUIPMENT IN THIS ROOM TO THE BONDING BUSBAR. SEE ELECTRICAL PLANS.
3. PROVIDE CABLE DROPOUTS (2 PER RACK) LOCATED AS INDICATED FOR VERTICAL CABLE SUPPORT. ANCHOR CABLE DROPOUTS TO TRAY. ANCHOR EQUIPMENT RACKS TO TRAY. SEE DETAIL 2/T4.1.
4. ELECTRICAL PANELBOARD. COORDINATE WITH ELECTRICAL CONTRACTOR TO MAINTAIN CODE REQUIRED 3'-0" CLEAR SPACE IN FRONT OF PANELBOARD. OFFSET TRAY FROM WALL MINIMUM OF 6" TO AVOID ELECTRICAL PANEL. SEE ELECTRICAL PLANS.
5. LIGHTING FIXTURE INDICATED FOR REFERENCE ONLY. SEE ELECTRICAL PLANS.
6. PLYWOOD FROM 8" AFF TO 8'-8" AFF. REFER TO ARCHITECTURAL PLANS FOR EXACT LOCATIONS AND SPECIFICATIONS. PAINT PLYWOOD WITH (2) COATS OF FIRE-RETARDANT WHITE PAINT. COORDINATE PAINTING OF WALLS AROUND PLYWOOD AND CEILING BEFORE INSTALLATION OF TELECOMMUNICATIONS EQUIPMENT.
7. 2-POST EQUIPMENT RACK.
8. 8" VERTICAL WIRE MANAGER.
9. PATHWAY SLEEVES. SEE PATHWAY FLOOR PLANS.
10. OWNER-FURNISHED, OWNER-INSTALLED HORIZONTAL PDU.
11. OWNER-FURNISHED, OWNER-INSTALLED UPS WITH NETWORK CARD.
12. SECURE EQUIPMENT RACK/CABINET TO LADDER RUNWAY ABOVE USING MANUFACTURER'S SPECIFIC FITTING.
13. ELECTRICAL RECEPTACLE INDICATED FOR REFERENCE ONLY. SEE ELECTRICAL PLANS.
14. INSTALL AUDIOVISUAL OUTLET IN RECESSED PORTION OF WALL AT BOTTOM FACE OF RECESS. REFER TO ARCHITECTURAL ELEVATIONS.
15. 2U HORIZONTAL WIRE MANAGER.
16. 1U HORIZONTAL WIRE MANAGER.
17. 4U HORIZONTAL WIRE MANAGER.

© COPYRIGHT 2022 AE# 20208261
Permission to reproduce all or part of this drawing is hereby granted solely for the limited purpose of construction of this project or archiving. Unauthorized copying, disclosure or construction use without written permission of Alvine Engineering is prohibited by copyright law.

NOTE:
DO NOT SCALE DRAWINGS. VERIFY ALL DIMENSIONS and clearances from ARCHITECTURAL, STRUCTURAL, shop and other appropriate drawing or at site. lay out and coordinate all work prior to installation to provide clearances required for operation, maintenance, and codes and verify non-interference with other work. DO NOT FABRICATE PRIOR TO VERIFICATION OF CLEARANCE FOR ALL TRADES. READ SPECIFICATIONS.

IP DESIGN GROUP
CONSULTING + DESIGN
www.ipdesigngroup.com

THE MCKINNEY PARTNERSHIP
architects
3600 West Main
Suite 200
Norman, Oklahoma
73072
405.360.1400 p
405.364.8287 f
tmparch.com

Copyright © 2008 The McKinney Partnership Architects, P.C., All Rights Reserved

Seal:

Project:

City of Norman
Municipal Complex Renovation
Municipal Court
321 N. Webster Avenue
Norman, OK

Issue Date:
11/15/22 ISSUED FOR BIDDING

Revisions:

Project Number:
CM083319

Sheet Title:
ENLARGED FLOOR PLANS - TELECOM

Sheet Number:
T2.0

November 11, 2022 9:27 AM Tyler Bailey

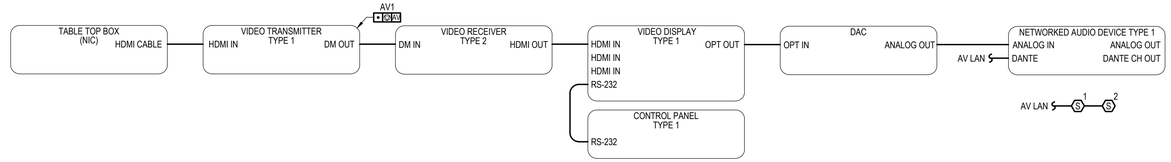

JURY 120 - AUDIOVISUAL SCHEMATIC

NO SCALE

1
T3.0

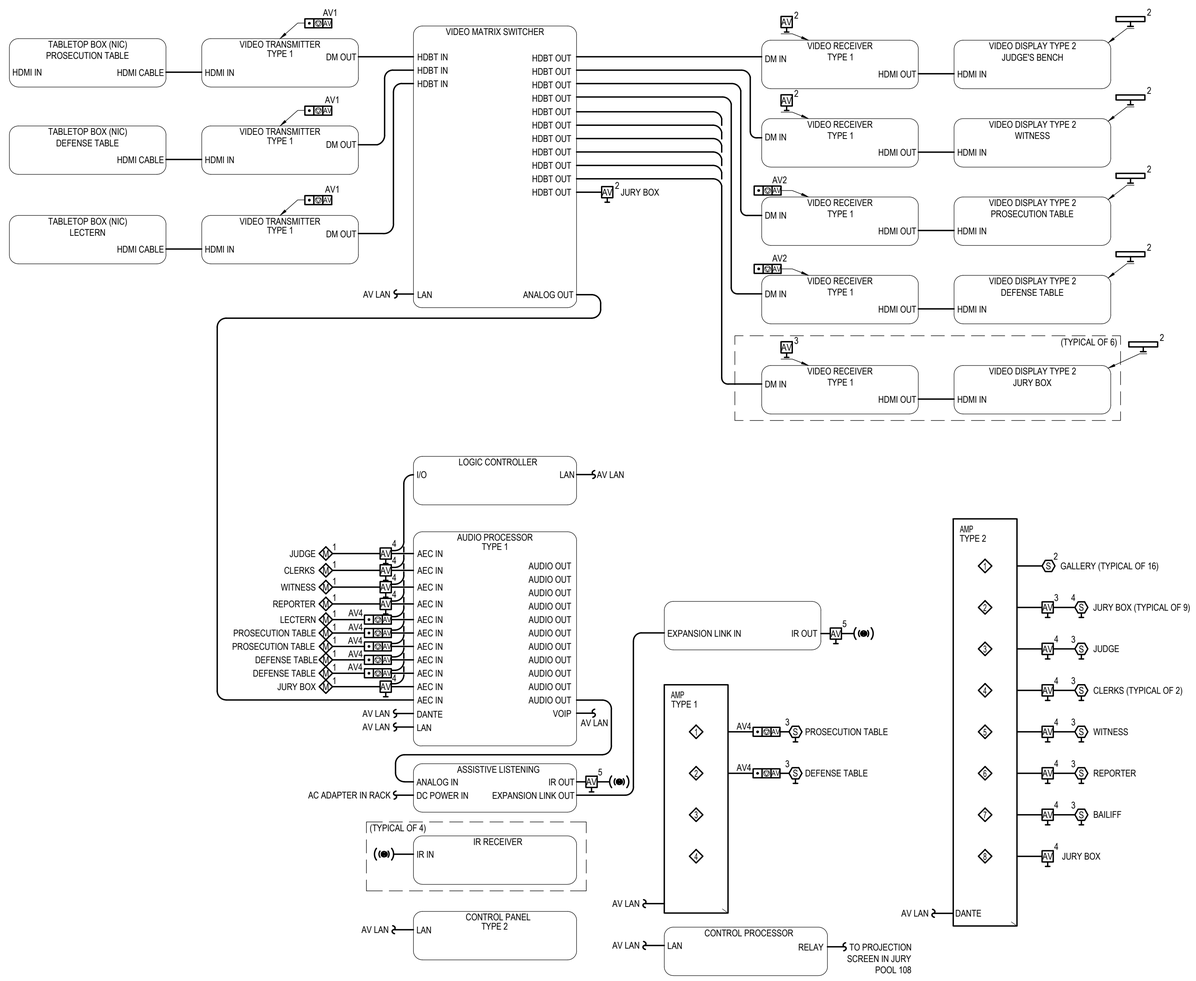

COURT 'A' 118 - AUDIOVISUAL SCHEMATIC

NO SCALE

2
T3.0

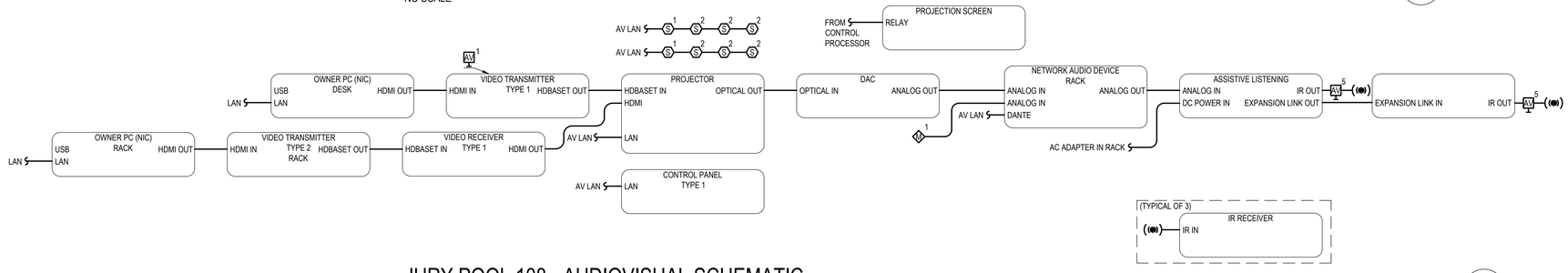

JURY POOL 108 - AUDIOVISUAL SCHEMATIC

NO SCALE

3
T3.0

© COPYRIGHT 2022 AE# 20208261
Permission to reproduce all or part of this drawing is hereby granted solely for the limited purpose of construction of this project or archiving. Unauthorized copying, disclosure or construction use without written permission of Alvine Engineering is prohibited by copyright law.

NOTE:
DO NOT SCALE DRAWINGS. VERIFY ALL DIMENSIONS and clearances from ARCHITECTURAL, STRUCTURAL, shop and other appropriate drawing or at site. lay out and coordinate all work prior to installation to provide clearances required for operation, maintenance, and codes and verify non-interference with other work. DO NOT FABRICATE PRIOR TO VERIFICATION OF CLEARANCE FOR ALL TRADES. READ SPECIFICATIONS.

IP DESIGN GROUP
CONSULTING + DESIGN
www.ipdesigngroup.com

THE MCKINNEY PARTNERSHIP architects
3600 West Main
Suite 200
Norman, Oklahoma
73072
405.360.1400 p
405.364.8287 f
tmparch.com

Copyright © 2008 The McKinney Partnership Architects, P.C., All Rights Reserved

Seal:

Project:

City of Norman
Municipal Complex Renovation
Municipal Court
321 N. Webster Avenue
Norman, OK

Issue Date:
11/15/22 ISSUED FOR BIDDING

Revisions:

Project Number:
CM083319

Sheet Title:
RISERS - TELECOM

Sheet Number:
T3.0

November 11, 2022 9:27 AM Tyler Bailey

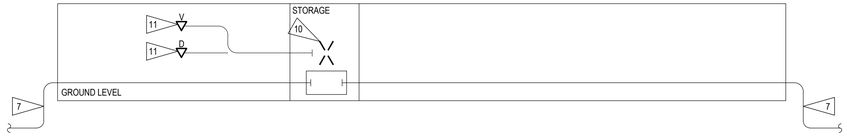

COPPER AND FIBER DEMOLITION RISER

NO SCALE

1 / T3.1

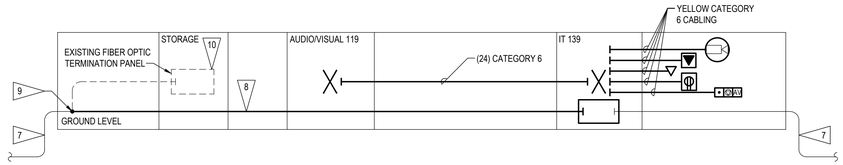

COPPER AND FIBER RISER

NO SCALE

2 / T3.1

GROUNDING AND PATHWAYS RISER

NO SCALE

3 / T3.1

ELECTRONIC ACCESS CONTROL RISERS

NO SCALE

4 / T3.1

GENERAL NOTES

1. PROVIDE CABLE DROPOUTS ABOVE EACH PIECE OF VERTICAL CABLE MANAGEMENT, AT ALL CABLE TRAY ELEVATION CHANGES AND AT ALL TRANSITIONS FROM HORIZONTAL TO VERTICAL CABLE TRAY. SEE DETAIL 2/T4.1.
2. FIRMLY SUPPORT ALL CABLE TRAY WITHIN 12-INCHES OF EACH END AND SUPPORT AT INTERVALS OF 4-1/2 FEET MAXIMUM.
3. FIRMLY SUPPORT RACEWAY PROVISIONS WITHIN 3 FEET OF EACH END AND SUPPORT AT INTERVALS OF 10 FEET MAXIMUM.
4. INSTALL FIRESTOP AFTER CABLING INSTALLATION IS COMPLETE.
5. INSTALL CABLING IN CONDUITS/SLEEVES AFTER PLASTIC OR BOND BUSHINGS HAVE BEEN INSTALLED.
6. FIELD VERIFY ALL CONDITIONS.
7. PATHWAYS HAVE BEEN DESIGNED TO FACILITATE A HORIZONTAL CABLE LENGTH THAT COMPLIES WITH THE PERMANENT LINK REQUIREMENTS OF TIA 568B. PRIOR TO THE INSTALLATION OF CABLING, INFORM ENGINEER OF ANY JACKS BEYOND TIA DISTANCE LIMITS. OWNER AND ENGINEER SHALL NOT BE RESPONSIBLE FOR OUT-OF-DISTANCE OUTLETS THAT ARE NOT TESTED PRIOR TO INSTALLATION.
8. DO NOT REMOVE ANY EXISTING CABLING UNTIL SERVICES ARE SUCCESSFULLY CUT OVER TO THE NEW CABLE SYSTEM. COORDINATE CABLE AND EQUIPMENT REMOVAL WITH THE OWNER.
9. EQUIPMENT TO REMAIN IS INDICATED LIGHT OR 1/2 TONED.
10. NEW EQUIPMENT IS INDICATED BOLD OR DARK.
11. REMOVE EQUIPMENT INDICATED WITH A DASHED LINE.

FLAG NOTES

1. TELECOMMUNICATIONS BONDING CONDUCTOR (TBC) SEE ELECTRICAL PLANS.
2. BOND CABLE MANAGEMENT TRAY AND LADDER RUNWAY.
3. TELECOMMUNICATIONS MAIN GROUND BAR (TMGB). SEE ELECTRICAL PLANS. PROVIDE PERMANENT LABEL READING: TMGB.
4. PANELBOARD BONDING JUMPER (ACEG) BY THE ELECTRICAL CONTRACTOR
5. VERTICAL CABLE MANAGEMENT TRAY MOUNTED TO WALL. SEE DETAIL 8/T4.1.
6. GROUND TELECOM RACK(S) AND CABINETS(S).
7. EXISTING FIBER OPTIC CABLING SHALL BE RE-ROUTED TO NEW TELECOM ROOM.
8. EXTEND ENTRANCE CABLE TO NEW IT 139. SECURE SPLICE CASE TO WALL. LEAVE ENOUGH PLYWOOD AND SUPPORTS FOR COPPER AND FIBER OPTIC SPLICE CASES. COORDINATE HALF-TAPPING/SPLICING WITH OWNER. DO NOT DISRUPT SERVICE WITHOUT COORDINATING WITH OWNER. DO NOT HALF-TAP DIGITAL PHONE CABLE PAIRS.
9. PROVIDE NEW FUSION SPLICE FROM EXISTING FIBER OPTIC CABLING TO EXTEND TO IT 139. TERMINATE FIBER OPTIC CABLING IN IT 139.
10. REMOVE INACTIVE CABLE, TERMINATIONS, HARDWARE AND ASSOCIATED APPURTENANCES AND RETURN TO OWNER.
11. REMOVE EXISTING DATA/PHONE CABLE, JACKS, PLATES AND ASSOCIATED TERMINATIONS. SEE FLOOR PLANS FOR QUANTITY.

© COPYRIGHT 2022 AE# 20208261
Permission to reproduce all or part of this drawing is hereby granted solely for the limited purpose of construction of this project or archiving. Unauthorized copying, disclosure or construction use without written permission of Alvine Engineering is prohibited by copyright law.

NOTE:
DO NOT SCALE DRAWINGS. VERIFY ALL DIMENSIONS and clearances from ARCHITECTURAL, STRUCTURAL, shop and other appropriate drawing or at site. lay out and coordinate all work prior to installation to provide clearances required for operation, maintenance, and codes and verify non-interference with other work. DO NOT FABRICATE PRIOR TO VERIFICATION OF CLEARANCE FOR ALL TRADES. READ SPECIFICATIONS.

IP DESIGN GROUP
CONSULTING + DESIGN
www.ipdesigngroup.com

THE MCKINNEY PARTNERSHIP
architects
3600 West Main
Suite 200
Norman, Oklahoma
73072
405.360.1400 p
405.364.8287 f
tmparch.com

Copyright © 2008 The McKinney Partnership Architects, P.C., All Rights Reserved

Seal:

Project:

City of Norman
Municipal Complex Renovation
Municipal Court
321 N. Webster Avenue
Norman, OK

Issue Date:
11/15/22 ISSUED FOR BIDDING

Revisions:

Project Number:
CM083319

Sheet Title:
RISERS - TELECOM

Sheet Number:
T3.1

November 11, 2022 9:27 AM Tyler Bailey

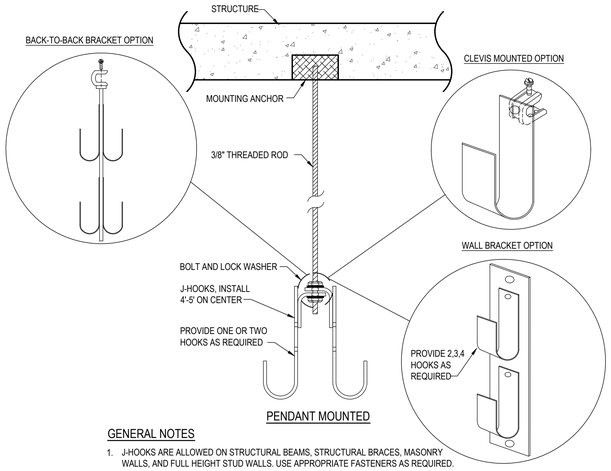

GENERAL NOTES

1. J-HOOKS ARE ALLOWED ON STRUCTURAL BEAMS, STRUCTURAL BRACES, MASONRY WALLS, AND FULL HEIGHT STUD WALLS. USE APPROPRIATE FASTENERS AS REQUIRED.
2. J-HOOKS SHALL NOT BE ON CEILING SUPPORTED HARDWARE, DUCT HANGERS, ETC.
3. J-HOOK CAPACITY:
   2": CATEGORY 6 = 35, CATEGORY 6A = 20
   4": CATEGORY 6 = 85, CATEGORY 6A = 45
4. UTILIZE 650 lbs. (MIN) ANCHORS ON THREADED ROD. MAXIMUM LOAD ON ASSEMBLY NOT TO EXCEED 150 lbs.
5. THREADED ROD MOUNTING IS SHOWN FOR FREE-STANDING CONDITIONS.
6. SECURE CABLE TO J-HOOK UTILIZING ACCESSORY OR VELCRO STRAPS.
7. J-HOOKS SHALL BE INSTALLED IN THE ABOVE VERTICAL ORIENTATION. DO NOT INSTALL IN A HORIZONTAL ORIENTATION.

'J' HOOK SUPPORTS

1 / T4.0

NO SCALE

TC_116_JHookSupports 07/22/20

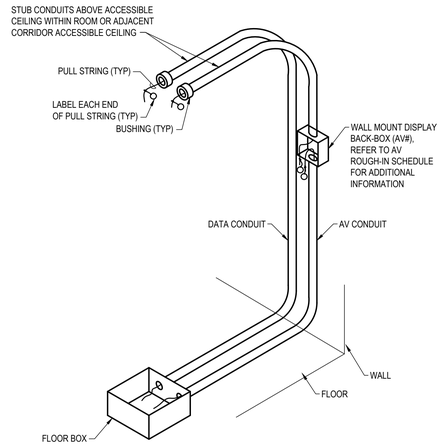

NOTES

1. REFER TO FLOOR BOX SCHEDULE FOR ADDITIONAL INFORMATION ON FLOOR BOX REQUIREMENTS.
2. REFER TO FLOOR BOX SCHEDULES FOR CONDUIT SIZE REQUIREMENTS.
3. TRENCH EXISTING FLOORING AND PATCH AS REQUIRED. SEE ARCHITECTURAL SHEETS.

FLOOR BOX TO CEILING ROUGH-IN WITH DISPLAY ROUGH-IN

2 / T4.0

NO SCALE

TC_122_FloorboxToCeilingRough-in 05/03/17

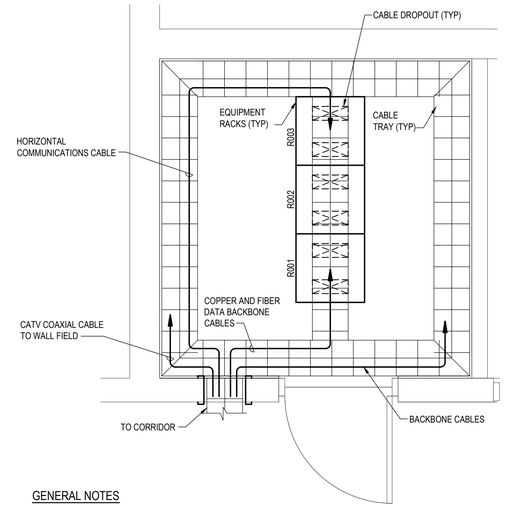

GENERAL NOTES

1. NEATLY ARRANGE CABLE IN TRAYS.
2. PROVIDE SLACK LOOPS AS INDICATED IN SPECIFICATIONS.

TYPICAL TELECOMMUNICATIONS ROOM CABLE ROUTING

3 / T4.0

NO SCALE

TC_305_TypicalTelecommunicationsRoomCableRouting 06/15/14

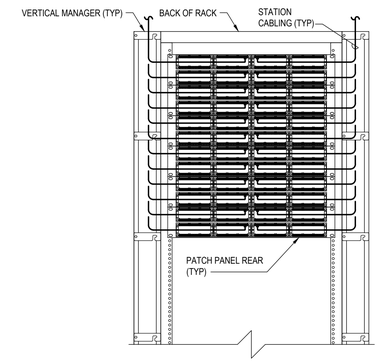

GENERAL NOTES

1. ROUTE CABLES IN A NEAT AND ORDERLY FASHION. DRESS WITH A MINIMUM OF (1) VELCRO CABLE TIES PER 6 PORTS.
2. UTILIZE BOTH SIDES OF THE RACK FOR CABLE ROUTING.
3. BUNDLE CABLES VERTICALLY AT A MINIMUM EVERY 12".
4. LASH CABLES TO THE VERTICAL MANAGEMENT.

TELECOMMUNICATIONS RACK PATCH PANEL CABLE ROUTING

4 / T4.0

NO SCALE

TC_304_TelecommunicationsRackPatchPanelCableRouting 06/15/14

© COPYRIGHT 2022 AE# 20208261
Permission to reproduce all or part of this drawing is hereby granted solely for the limited purpose of construction of this project or archiving. Unauthorized copying, disclosure or construction use without written permission of Alvine Engineering is prohibited by copyright law.

NOTE:
DO NOT SCALE DRAWINGS. VERIFY ALL DIMENSIONS and clearances from ARCHITECTURAL, STRUCTURAL, shop and other appropriate drawing or at site. lay out and coordinate all work prior to installation to provide clearances required for operation, maintenance, and codes and verify non-interference with other work. DO NOT FABRICATE PRIOR TO VERIFICATION OF CLEARANCE FOR ALL TRADES. READ SPECIFICATIONS.

IP DESIGN GROUP

CONSULTING + DESIGN
www.ipdesigngroup.com

THE MCKINNEY PARTNERSHIP
architects

3600 West Main
Suite 200
Norman, Oklahoma
73072
405.360.1400 p
405.364.8287 f
tmparch.com

Copyright © 2008 The McKinney Partnership Architects, P.C., All Rights Reserved

Seal:

Project:

City of Norman
Municipal Complex Renovation
Municipal Court
321 N. Webster Avenue
Norman, OK

Issue Date:
11/15/22 ISSUED FOR BIDDING

Revisions:

Project Number:
CM083319

Sheet Title:
DETAILS - TELECOM

Sheet Number:
T4.0

November 11, 2022 9:27 AM Tyler Bailey

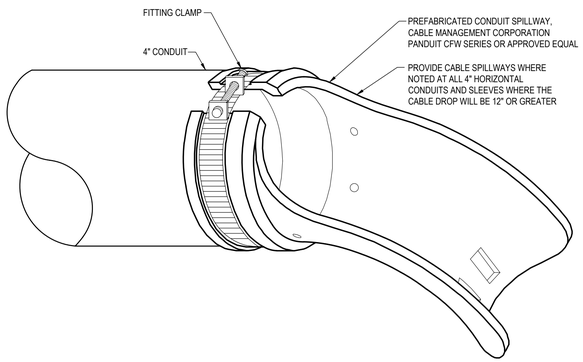

NOTE: TELECOMMUNICATIONS CONTRACTOR TO INSTALL SPILLWAYS ON ALL CONDUITS PRIOR TO INSTALLATION OF CABLES.

CONDUIT/SLEEVE SPILLWAY

NO SCALE — TC_107_ConduitSleeveSpillway 06/14/14 — 1 / T4.1

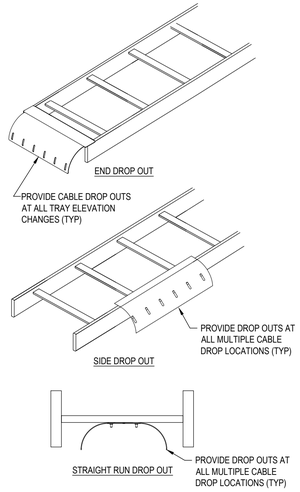

LADDER TRAY CABLE DROPOUT

NO SCALE — 2 / T4.1

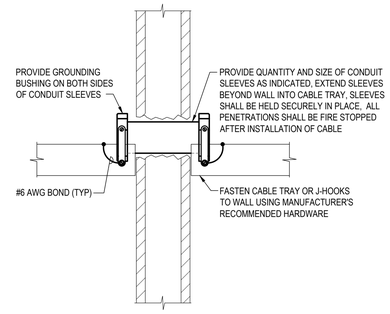

TYPICAL WALL SECTION PENETRATION

NO SCALE — TC_105_TypicalWallSectionPenetration 06/14/14 — 3 / T4.1

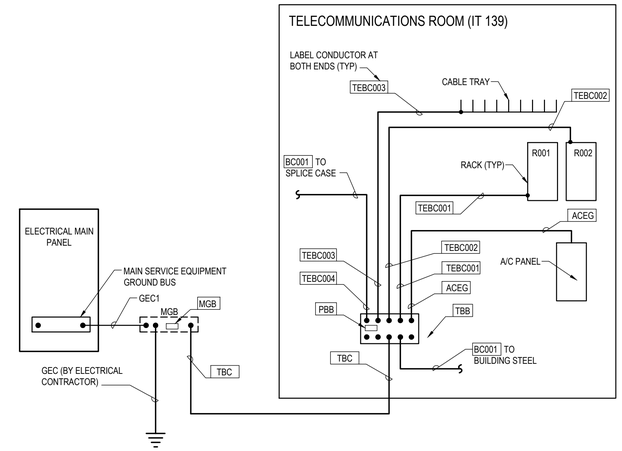

GROUNDING LABELING

NO SCALE — TC_806_GroundingLabeling 06/15/14 — 4 / T4.1

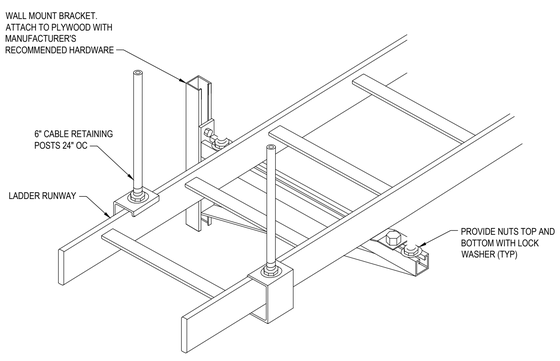

WALL BRACKET MOUNTED SINGLE TIER LADDER RUNWAY

NO SCALE — TC_224_WallBracketSingleTierLadder 07/14/14 — 5 / T4.1

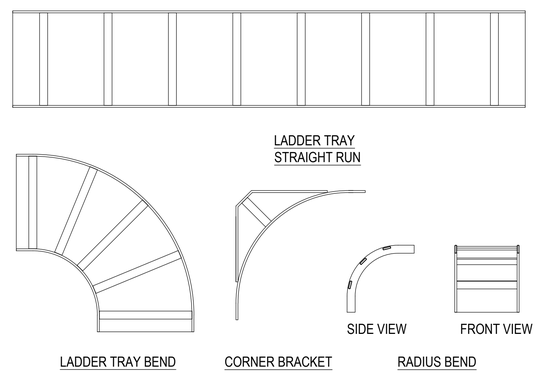

DIRECTIONAL WIRE MANAGEMENT LADDER TRAY

NO SCALE — TC_218_DirectionWireManagementLadderTray 06/15/14 — 6 / T4.1

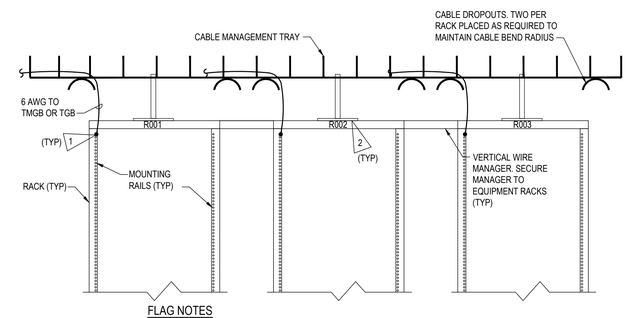

FLAG NOTES

1. BOND EACH EQUIPMENT RACK INDIVIDUALLY TO GROUND BAR. PROVIDE MANUFACTURER'S RACK BONDING KIT.
2. PROVIDE 2 RACK SUPPORTS PER EACH EQUIPMENT RACK. PROVIDE MANUFACTURER'S EQUIPMENT SUPPORT KIT AS REQUIRED. REFER TO DETAIL X THIS SHEET.

RACK GROUNDING AND SUPPORT

NO SCALE — TC_815_RackGroundingAndSupport 06/15/14 — 7 / T4.1

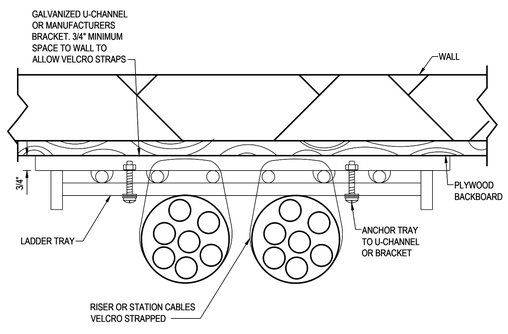

LADDER TRAY VERTICAL WALL MOUNTING

NO SCALE — TC_226_LadderRunwayElecBoxSupport 07/14/14 — 8 / T4.1

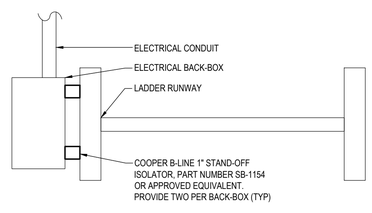

LADDER RUNWAY ELECTRICAL BOX SUPPORT

NO SCALE — TC_226_LadderRunwayElecBoxSupport 07/14/14 — 9 / T4.1

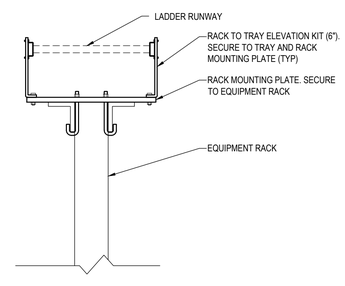

EQUIPMENT RACK TO CABLE TRAY SUPPORT

NO SCALE — TC_225_EquipmentRackCableTraySupport 07/14/14 — 10 / T4.1

© COPYRIGHT 2022 AE# 20208261
Permission to reproduce all or part of this drawing is hereby granted solely for the limited purpose of construction of this project or archiving. Unauthorized copying, disclosure or construction use without written permission of Alvine Engineering is prohibited by copyright law.

NOTE:
DO NOT SCALE DRAWINGS. VERIFY ALL DIMENSIONS and clearances from ARCHITECTURAL, STRUCTURAL, shop and other appropriate drawing or at site. lay out and coordinate all work prior to installation to provide clearances required for operation, maintenance, and codes and verify non-interference with other work. DO NOT FABRICATE PRIOR TO VERIFICATION OF CLEARANCE FOR ALL TRADES. READ SPECIFICATIONS.

IP DESIGN GROUP
CONSULTING + DESIGN
www.ipdesigngroup.com

THE MCKINNEY PARTNERSHIP architects
3600 West Main
Suite 200
Norman, Oklahoma
73072
405.360.1400 p
405.364.8287 f
tmparch.com

Copyright © 2008 The McKinney Partnership Architects, P.C., All Rights Reserved

Seal:

Project:
City of Norman
Municipal Complex Renovation
Municipal Court
321 N. Webster Avenue
Norman, OK

Issue Date:
11/15/22 ISSUED FOR BIDDING

Revisions:

Project Number:
CM083319

Sheet Title:
DETAILS - TELECOM

Sheet Number:
T4.1

November 11, 2022 9:27 AM Tyler Bailey

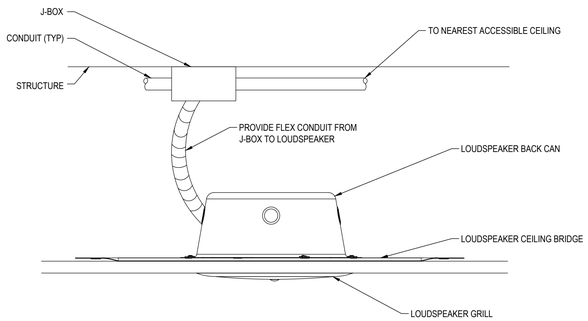

CEILING LOUDSPEAKER MOUNTING DETAIL

NO SCALE — TC_204_CableManagement1TrayWallMount 06/15/14 — 1 / T4.2

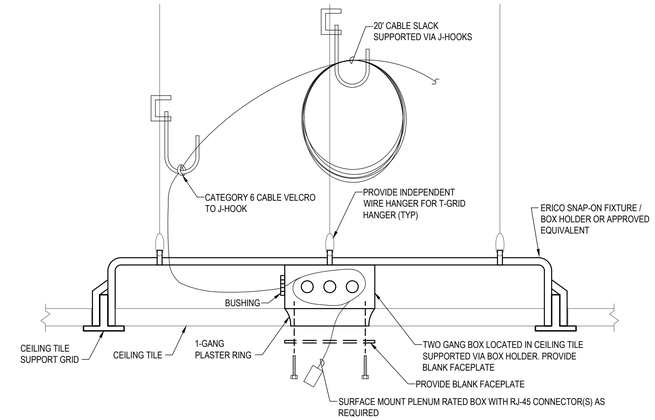

AV 1,1D

WIRELESS ACCESS POINT J-HOOK ROUGH-IN

NO SCALE — TC_702_WirelessAccessPointRoughIn 06/15/14 — 2 / T4.2

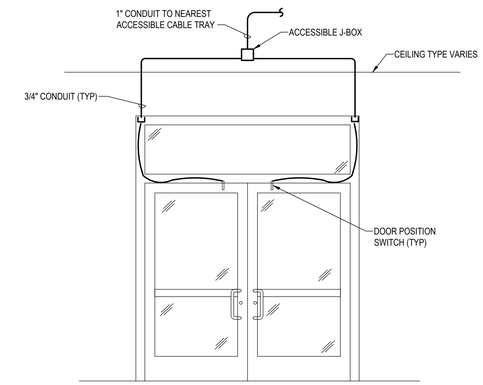

DOOR ELEVATION

NO SCALE — SC_300_DoorElevation 06/16/14 — 3 / T4.2

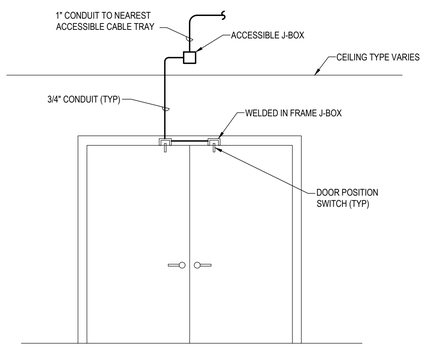

DOOR ELEVATION

NO SCALE — SC_400_DoorElevation 06/16/14 — 4 / T4.2

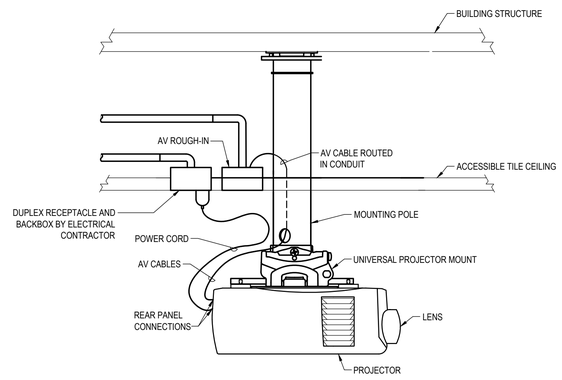

NOTES:

1. MOUNT TO BUILDING STRUCTURE IN ACCORDANCE WITH MANUFACTURER'S SPECIFICATIONS.
2. COORDINATE FINAL MOUNTING LOCATION WITH THE ARCHITECT PRIOR TO ROUGH-IN.
3. ALL AV CABLES TO BE NEATLY TIED AND WRAPPED WITH BLACK WIRE LOOM BETWEEN PROJECTOR AND MOUNTING POLE.
4. COORDINATE RECEPTACLE INSTALLATION WITH ELECTRICAL CONTRACTOR.

CEILING POST-MOUNTED PROJECTOR

NO SCALE — AV_21_PostMountProjector 06/14/14 — 5 / T4.2

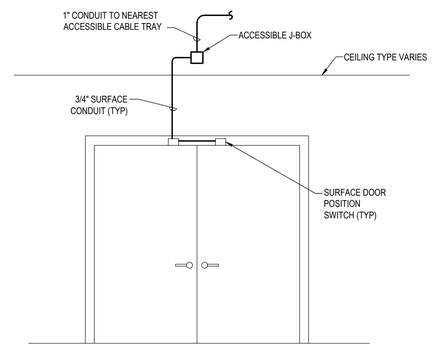

DOOR ELEVATION

NO SCALE — SC_400_DoorElevation 06/16/14 — 6 / T4.2

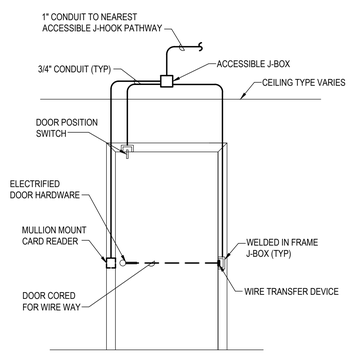

DOOR ELEVATION

NO SCALE — SC_202_DoorElevation 06/16/14 — 7 / T4.2

© COPYRIGHT 2022 AE# 20208261
Permission to reproduce all or part of this drawing is hereby granted solely for the limited purpose of construction of this project or archiving. Unauthorized copying, disclosure or construction use without written permission of Alvine Engineering is prohibited by copyright law.

NOTE:
DO NOT SCALE DRAWINGS. VERIFY ALL DIMENSIONS and clearances from ARCHITECTURAL, STRUCTURAL, shop and other appropriate drawing or at site. lay out and coordinate all work prior to installation to provide clearances required for operation, maintenance, and codes and verify non-interference with other work. DO NOT FABRICATE PRIOR TO VERIFICATION OF CLEARANCE FOR ALL TRADES. READ SPECIFICATIONS.

IP DESIGN GROUP
CONSULTING + DESIGN
www.ipdesigngroup.com

THE MCKINNEY PARTNERSHIP architects
3600 West Main
Suite 200
Norman, Oklahoma
73072
405.360.1400 p
405.364.8287 f
tmparch.com

Copyright © 2008 The McKinney Partnership Architects, P.C., All Rights Reserved

Seal:

Project:
City of Norman
Municipal Complex Renovation
Municipal Court
321 N. Webster Avenue
Norman, OK

Issue Date:
11/15/22 ISSUED FOR BIDDING

Revisions:

Project Number:
CM083319

Sheet Title:
DETAILS - TELECOM

Sheet Number:
T4.2

November 11, 2022 9:27 AM Tyler Bailey

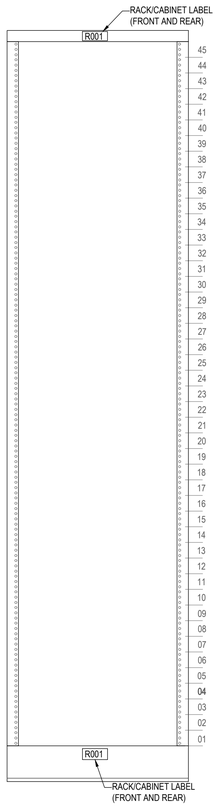

RACK/CABINET LABELING IDENTIFIER

NO SCALE — TC_523_RackCabinetLabelingIdentifier 06/15/14 — 1 / T4.3

GENERAL NOTES

1. CABINET LABELING IS SHOWN AS A TYPICAL LABEL. REFER TO SHEET T2.0 FOR MORE INFORMATION.

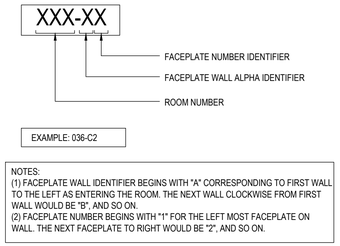

TYPICAL FACEPLATE LABELING

NO SCALE — TC_516_TypicalFaceplateLabeling 06/15/14 — 2 / T4.3

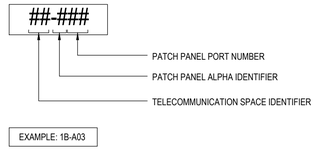

TYPICAL HORIZONTAL CABLING LABELING

NO SCALE — TC_517_TypicalHorizontalCablingLabeling 06/15/14 — 3 / T4.3

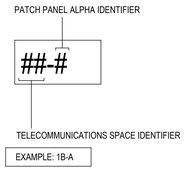

PATCH PANEL LABELING

NO SCALE — TC_518_PatchPanelLabeling 06/15/14 — 4 / T4.3

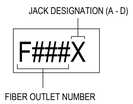

FIBER PANEL LABELING

NO SCALE — TC_519_FiberPanelLabeling 06/15/14 — 5 / T4.3

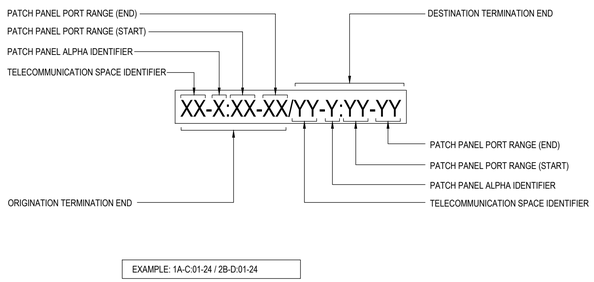

TYPICAL BACKBONE CABLING LABELING

NO SCALE — TC_522_TypicalBackboneCablingLabeling 06/15/14 — 6 / T4.3

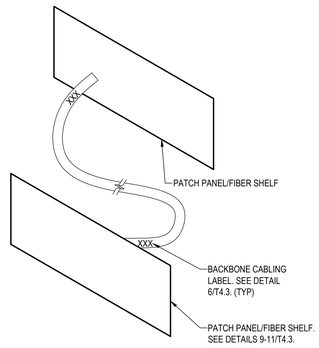

TYPICAL BACKBONE CABLING LABELING

NO SCALE — TC_524_TypicalBackboneCablingLabeling 06/15/14 — 7 / T4.3

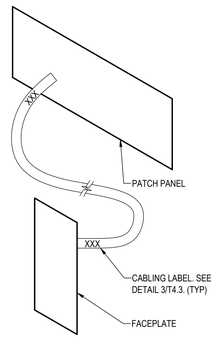

TYPICAL HORIZONTAL CABLING LABELING

NO SCALE — TC_525_TypicalHorizontalCablingLabeling 06/15/14 — 8 / T4.3

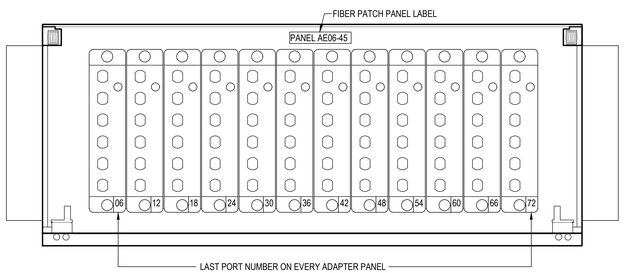

FRONT OF SHELF

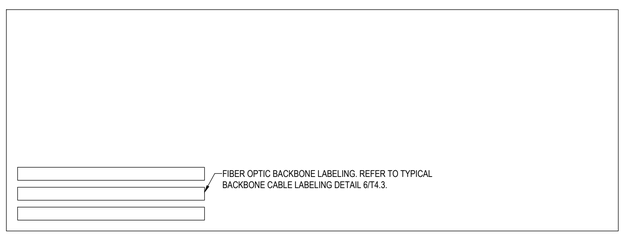

FRONT COVER

FIBER SHELF LABELING

NO SCALE — TC_604_FiberShelfLabeling 06/15/14 — 9 / T4.3

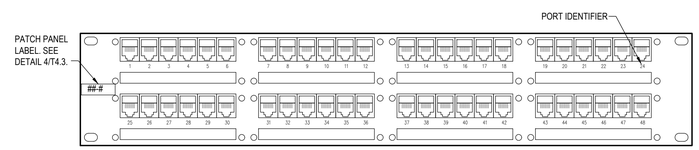

48 PORT MODULAR PATCH PANEL LABELING

NO SCALE — TC_601_48PortModularPatchPanelLabeling 07/14/14 — 10 / T4.3

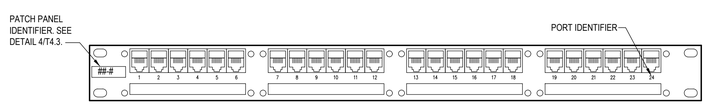

24 PORT MODULAR PATCH PANEL LABELING

NO SCALE — TC_602_24PortModularPatchPanelLabeling 07/14/14 — 11 / T4.3

© COPYRIGHT 2022 AE# 20208261
Permission to reproduce all or part of this drawing is hereby granted solely for the limited purpose of construction of this project or archiving. Unauthorized copying, disclosure or construction use without written permission of Alvine Engineering is prohibited by copyright law.

NOTE:
DO NOT SCALE DRAWINGS. VERIFY ALL DIMENSIONS and clearances from ARCHITECTURAL, STRUCTURAL, shop and other appropriate drawing or at site. lay out and coordinate all work prior to installation to provide clearances required for operation, maintenance, and codes and verify non-interference with other work. DO NOT FABRICATE PRIOR TO VERIFICATION OF CLEARANCE FOR ALL TRADES. READ SPECIFICATIONS.

DESIGN GROUP
CONSULTING + DESIGN
www.ipdesigngroup.com

THE MCKINNEY PARTNERSHIP
architects
3600 West Main
Suite 200
Norman, Oklahoma
73072
405.360.1400 p
405.364.8287 f
tmparch.com

Copyright © 2008 The McKinney Partnership Architects, P.C., All Rights Reserved

Seal:

Project:

City of Norman
Municipal Complex Renovation
Municipal Court
321 N. Webster Avenue
Norman, OK

Issue Date:
11/15/22 ISSUED FOR BIDDING

Revisions:

Project Number:
CM083319

Sheet Title:
DETAILS - TELECOM

Sheet Number:
T4.3

November 11, 2022 9:27 AM Tyler Bailey

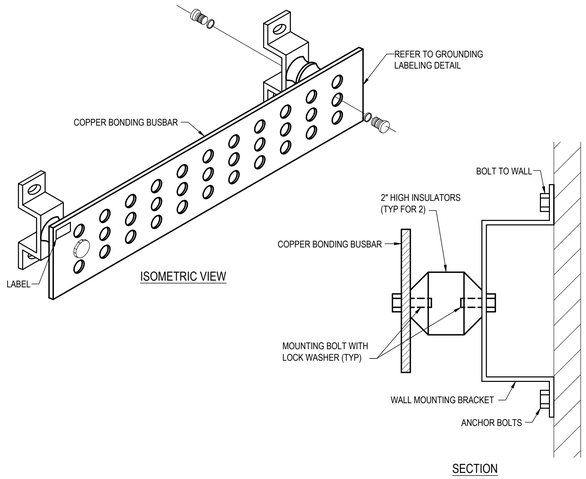

BONDING BUSBAR SCHEDULE		
MARK	NOMINAL SIZE	ERITECH CAT #
PBB	1/4" x 4" x 20"	TMGB-A20L27PT

BONDING BUSBAR

1 T4.4

NO SCALE

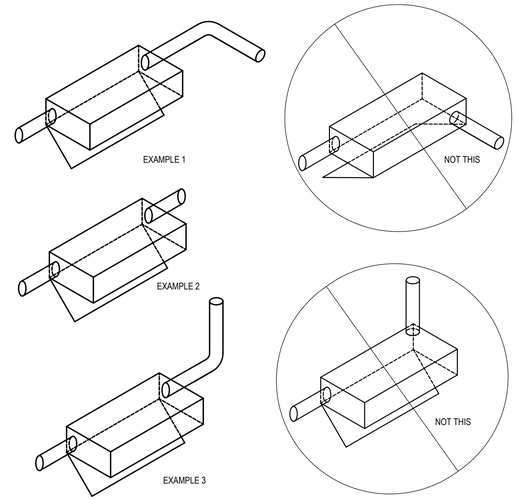

TELECOMMUNICATIONS PULL BOX

2 T4.4

NO SCALE

TC_220_TelecommunicationsPullBox 06/15/14

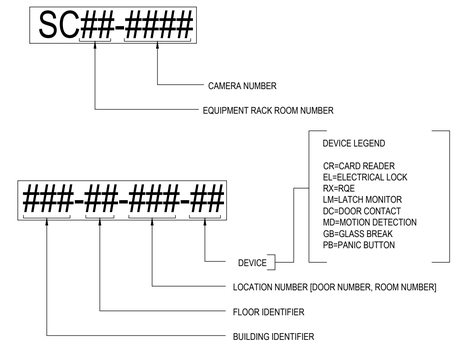

SECURITY CABLE LABELING DETAIL

3 T4.4

NO SCALE

SC_LB_1.2_SecurityCableLabelingDetail 06/16/14

NOTES:

1. ONLY LOCATION IDENTIFICATION IS REQUIRED WHEN USING COMPOSITE ACCESS CONTROL CABLE THAT IS PRE-MARKED WITH DEVICE SPECIFIERS ON INDIVIDUAL CABLE COMPONENTS.

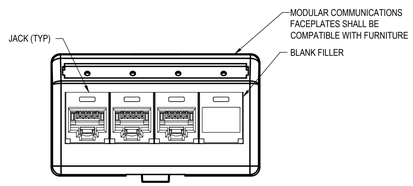

MODULAR FURNITURE COMMUNICATIONS OUTLET

4 T4.4

NO SCALE

TC_511_ModularFurnitureCommunicationsOutletFaceplate 06/15/14

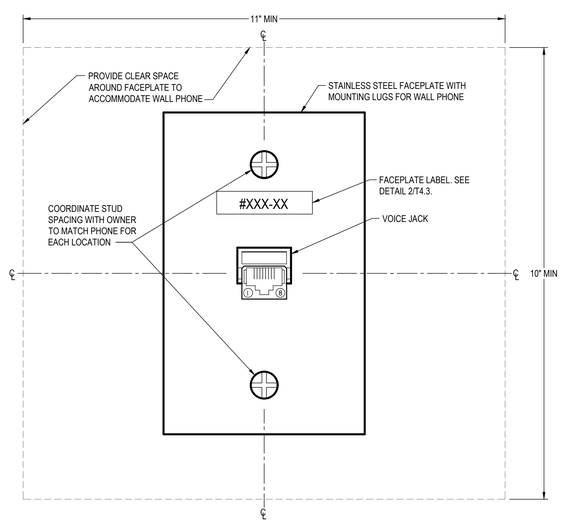

WALL PHONE - VOICE ONLY FACEPLATE

6 T4.4

NO SCALE

TC_503_WallPhoneVoiceOnlyFaceplate 04/10/15

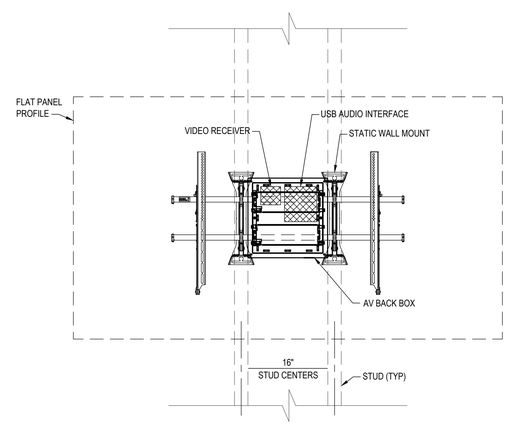

FRONT VIEW

NOTES

1. REFER TO FLAT PANEL DISPLAY SCHEDULE FOR WALL MOUNT DETAILS.
2. MOUNT TO WALL STRUCTURE IN ACCORDANCE WITH MANUFACTURERS SPECIFICATIONS.
3. COORDINATE FINAL MOUNTING LOCATION OF FLAT PANEL DISPLAY WITH ENGINEER AND ARCHITECT PRIOR TO INSTALLATION.
4. SEE VIDEO DISPLAY SCHEDULE FOR MOUNTING HEIGHT.
5. SLIDING MOUNTING PLATE SHALL BE CHIEF CSSMP15X10. MOUNT TO WALL WITH ORIENTATION AS SHOWN ABOVE.

AV BACKBOX AND DISPLAY MOUNT

7 T4.4

NO SCALE

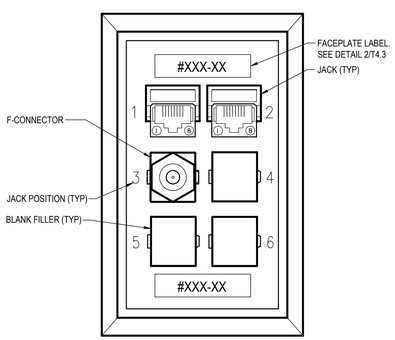

COMBINATION 6-PORT FACEPLATE

5 T4.4

NO SCALE

TC_508_Combination6PortFaceplate 06/15/14

© COPYRIGHT 2022 AE# 20208261
Permission to reproduce all or part of this drawing is hereby granted solely for the limited purpose of construction of this project or archiving. Unauthorized copying, disclosure or construction use without written permission of Alvine Engineering is prohibited by copyright law.

NOTE:
DO NOT SCALE DRAWINGS. VERIFY ALL DIMENSIONS and clearances from ARCHITECTURAL, STRUCTURAL, shop and other appropriate drawing or at site. lay out and coordinate all work prior to installation to provide clearances required for operation, maintenance, and codes and verify non-interference with other work. DO NOT FABRICATE PRIOR TO VERIFICATION OF CLEARANCE FOR ALL TRADES. READ SPECIFICATIONS.

IP DESIGN GROUP
CONSULTING + DESIGN
www.ipdesigngroup.com

THE MCKINNEY PARTNERSHIP architects
3600 West Main
Suite 200
Norman, Oklahoma
73072
405.360.1400 p
405.364.8287 f
tmparch.com

Copyright © 2008 The McKinney Partnership Architects, P.C., All Rights Reserved

Seal:

Project:

City of Norman
Municipal Complex Renovation
Municipal Court
321 N. Webster Avenue
Norman, OK

Issue Date:
11/15/22 ISSUED FOR BIDDING

Revisions:

Project Number:
CM083319

Sheet Title:
DETAILS - TELECOM

Sheet Number:
T4.4

November 11, 2022 9:27 AM Tyler Bailey

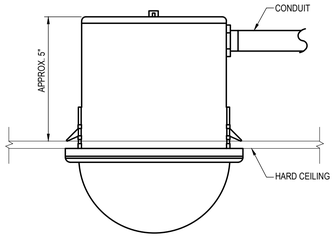

HARD CEILING RECESSED MOUNT DOME

NO SCALE — SC_EVS_3.10_HardCeilingRecessedMountDome 06/16/14 — 1 / T4.5

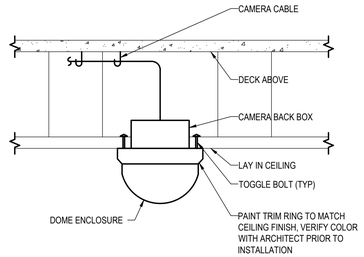

LAY IN CEILING MOUNT DOME

NO SCALE — SC_EVS_3.2_LayInCeilingMountDome 06/16/14 — 2 / T4.5

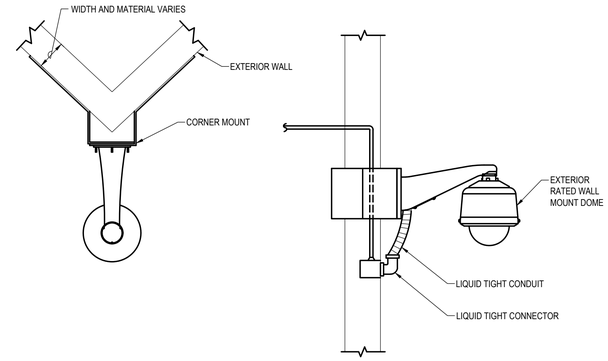

CORNER WALL MOUNT DOME

NO SCALE — SC_EVS_3.5_CornerWallMountDome 06/16/14 — 3 / T4.5

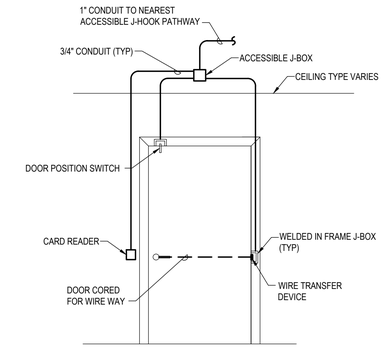

DOOR ELEVATION

NO SCALE — SC_201_DoorElevation 06/16/14 — 4 / T4.5

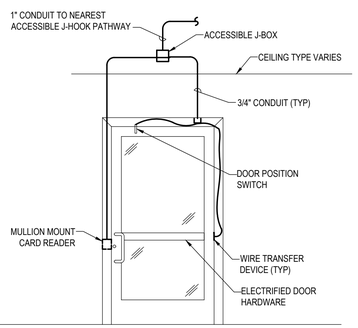

DOOR ELEVATION

NO SCALE — SC_101_DoorElevation 06/16/14 — 5 / T4.5

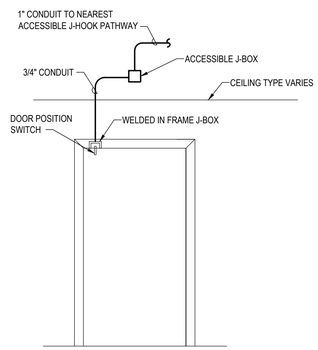

DOOR ELEVATION

NO SCALE — SC_200_DoorElevation 06/16/14 — 6 / T4.5

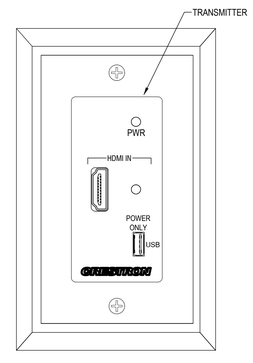

NOTES:

1. AV FACEPLATE SHALL BE 1-GANG CUSTOM PANELCRAFTERS WITH (1) DECORA OPENING FOR TRANSMITTER CONNECTOR.
2. FACEPLATES AND CONNECTORS LOCATED AT MILLWORK SHALL BE BLACK IN COLOR.
3. COORDINATE FINISH WITH ARCHITECT DURING SUBMITTAL PROCESS.
4. REFER TO SCHEMATIC FOR EQUIPMENT TYPES.

AV FACEPLATE DETAIL TYPE 1

NO SCALE — 7 / T4.5

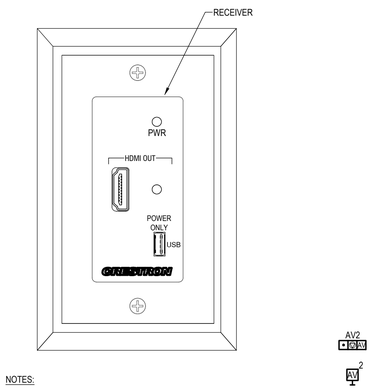

NOTES:

1. AV FACEPLATE SHAL BE 1-GANG CUSTOM PANELCRAFTERS WITH (1) DECORA OPENING FOR CRESTRON RECEIVER CONNECTOR.
2. FACEPLATES AND CONNECTORS LOCATED AT MILLWORK SHALL BE BLACK IN COLOR.
3. COORDINATE FINISH WITH ARCHITECT DURING SUBMITTAL PROCESS.

AV FACEPLATE DETAIL TYPE 2

NO SCALE — 8 / T4.5

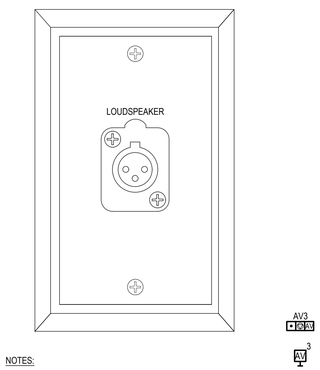

NOTES:

1. AV FACEPLATE IS CUSTOM 1-GANG PANELCRAFTERS.
2. FACEPLATES AND CONNECTORS LOCATED AT MILLWORK SHALL BE BLACK IN COLOR.
3. COORDINATE FINISH WITH ARCHITECT DURING SUBMITTAL PROCESS.

AV FACEPLATE DETAIL TYPE 3

NO SCALE — 9 / T4.5

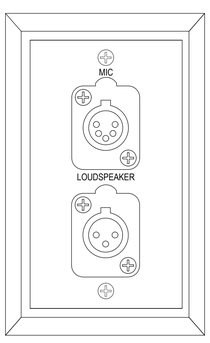

NOTES:

1. AV FACEPLATE IS 1-GANG CUSTOM PANELCRAFTERS.
2. FACEPLATES AND CONNECTORS LOCATED AT MILLWORK SHALL BE BLACK IN COLOR.
3. COORDINATE FINISH WITH ARCHITECT DURING SUBMITTAL PROCESS.

AV FACEPLATE DETAIL TYPE 4

NO SCALE — 10 / T4.5

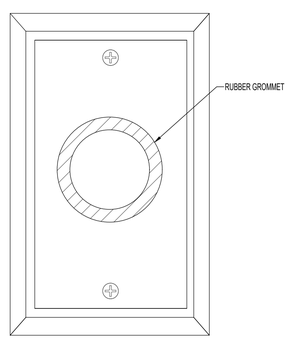

NOTES:

1. AV FACEPLATE IS CUSTOM PANELCRAFTERS.
2. FACEPLATES AND CONNECTORS LOCATED AT MILLWORK SHALL BE BLACK IN COLOR.

AV FACEPLATE DETAIL TYPE 5

NO SCALE — 11 / T4.5

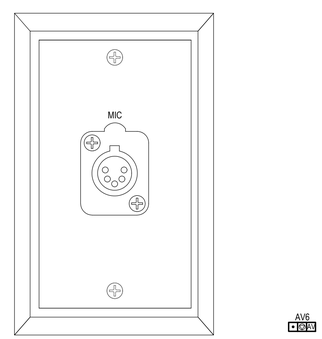

NOTES:

1. AV FACEPLATE IS CUSTOM 1-GANG PANELCRAFTERS.
2. FACEPLATES AND CONNECTORS LOCATED AT MILLWORK SHALL BE BLACK IN COLOR.
3. COORDINATE FINISH WITH ARCHITECT DURING SUBMITTAL PROCESS.

AV FACEPLATE DETAIL TYPE 6

NO SCALE — 12 / T4.5

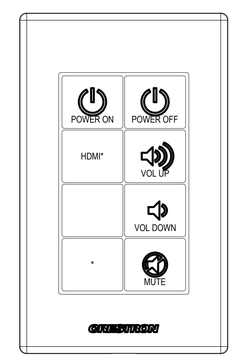

NOTES:

1. AV CONTROL PANEL IS CRESTRON BPC-8 WITH CUSTOM ENGRAVED BUTTONS.
2. COORDINATE FINISH WITH ARCHITECT.
3. * COORDINATE SOURCE BUTTONS WITH SYSTEM SCHEMATIC.

CONTROL PANEL FACEPLATE DETAIL TYPE 1

NO SCALE — 13 / T4.5

© COPYRIGHT 2022 AE# 20208261
Permission to reproduce all or part of this drawing is hereby granted solely for the limited purpose of construction of this project or archiving. Unauthorized copying, disclosure or construction use without written permission of Alvine Engineering is prohibited by copyright law.

NOTE:
DO NOT SCALE DRAWINGS. VERIFY ALL DIMENSIONS and clearances from ARCHITECTURAL, STRUCTURAL, shop and other appropriate drawing or at site. lay out and coordinate all work prior to installation to provide clearances required for operation, maintenance, and codes and verify non-interference with other work. DO NOT FABRICATE PRIOR TO VERIFICATION OF CLEARANCE FOR ALL TRADES. READ SPECIFICATIONS.

IP DESIGN GROUP
CONSULTING + DESIGN
www.ipdesigngroup.com

THE MCKINNEY PARTNERSHIP architects
3600 West Main
Suite 200
Norman, Oklahoma
73072
405.360.1400 p
405.364.8287 f
tmparch.com

Copyright © 2008 The McKinney Partnership Architects, P.C., All Rights Reserved

Seal:

Project:

City of Norman
Municipal Complex Renovation
Municipal Court
321 N. Webster Avenue
Norman, OK

Issue Date:
11/15/22 ISSUED FOR BIDDING

Revisions:

Project Number:
CM083319

Sheet Title:
DETAILS - TELECOM

Sheet Number:
T4.5

November 11, 2022 9:27 AM Tyler Bailey

SPECIAL SYSTEMS-ELECTRICAL ROUGH-IN AND CONDUIT REQUIREMENTS

SYMBOL ATTRIBUTE	TYPE	DESCRIPTION	ELECTRICAL ROUGH-IN BOX	BACK BOX DEPTH	ELECTRICAL PLASTER RING	CONDUIT/PATHWAY SIZE	MOUNTING HEIGHTS	REMARKS
R1	RECESSED - WALL	FLUSH WALL MOUNT OUTLET	4-SQUARE DEEP	2-1/8"	1-GANG	(1) 1"	18" AFF	1A
R2	RECESSED - WALL	FLUSH WALL MOUNT OUTLET (CONDUIT AT CEILING TO TRAY)	4-SQUARE DEEP	2-1/8"	1-GANG	(1) 1"	18" AFF	2A
R3	RECESSED - WALL	PULL-STRING IN WALL TO OUTLET	1-GANG CUT-IN BOX	-	1-GANG	-	18" AFF	11A
R4	RECESSED - WALL	PULL-STRING IN WALL TO OUTLET (CONDUIT AT CEILING TO TRAY)	1-GANG CUT-IN BOX	-	1-GANG	-	18" AFF	2A,11A
R5	RECESSED - WALL	FLUSH WALL MOUNT OUTLET (CONDUIT AT CEILING TO TRAY)	4-SQUARE DEEP	2-1/8"	1-GANG	(1) 1"	8A	-
R6	RECESSED - WALL	FLUSH WALL MOUNT OUTLET	4-SQUARE DEEP	2-1/8"	1-GANG	(1) 1"	4A	-
R7	SURFACE - WALL	SURFACE MOUNT OUTLET	WIREMOLD V2444 OR APPROVED EQUAL	-	-	(1) 1" / 2-PIECE STEEL SURFACE RACEWAY	18" AFF	9A,10A
R8	SURFACE - WALL	CONDUIT (NO RACEWAY)	4-SQUARE DEEP	2-1/8"	1-GANG	(1) 1"	18" AFF	1A
R9	SURFACE - WALL	CONDUIT (NO RACEWAY)	4-SQUARE DEEP	2-1/8"	1-GANG	(1) 1"	18" AFF	2A
R10	SURFACE - WALL	SURFACE RACEWAY (NO CONDUIT)	WIREMOLD V2444 OR APPROVED EQUAL	-	-	2-PIECE STEEL SURFACE RACEWAY	18" AFF	9A
R11	EXISTING RECESSED	WALL MOUNT OUTLET EXTENSION BOX WIREMOLD V5760	EXTENSION BOX	1-3/8" EXTENSION	1-GANG	-	-	14A
R12	RECESSED-WALL	FLUSH WALL MOUNT OUTLET	4-SQUARE DEEP	2-1/8"	2-GANG	(1) 1"	17A	15A
R13	SURFACE - WALL	DIVIDED DATA/POWER RACEWAY	WIREMOLD V2444-2 DATA WIREMOLD V2444D POWER	-	-	(1) 1" / 2-PIECE STEEL SURFACE RACEWAY	-	3A,10A
R14	SURFACE - WALL	DIVIDED DATA/POWER RACEWAY (NO CONDUIT)	WIREMOLD V2444-2 DATA WIREMOLD V2444D POWER	-	-	DIVIDED STEEL SURFACE RACEWAY	-	3A
R15	SURFACE - WALL	DIVIDED DATA/POWER RACEWAY	WIREMOLD 4000	-	-	DIVIDED STEEL SURFACE RACEWAY	-	3A,10A,13A
R16	ABOVE CEILING	CABLE SUPPORTED VIA J-HOOKS ABOVE CEILING	-	-	-	-	-	12A
R17	RECESSED - CEILING	FLUSH OUTLET ROUGH-IN AT ACCESSIBLE CEILING	4-SQUARE DEEP	2-1/8"	1-GANG	J-HOOK CABLE SUPPORT	-	7A
R18	RECESSED - CEILING	FLUSH OUTLET ROUGH-IN AT INACCESSIBLE CEILING	4-SQUARE DEEP	2-1/8"	1-GANG	(1) 1"	-	2A
R19	SURFACE - CEILING	CEILING OUTLET ROUGH-IN	WIREMOLD V2444 OR APPROVED EQUAL	-	-	2-PIECE STEEL SURFACE RACEWAY	-	9A
R20	SURFACE - CEILING	CEILING OUTLET ROUGH-IN	4-SQUARE DEEP	2-1/8"	1-GANG	(1) 1"	-	2A
R21	RECESSED - WALL	DISPLAY BACK BOX	CHIEF PACS26 SERIES	-	-	AV: (1) 1-1/4", DATA: (1) 1"	60" AFF	3A
R22	RECESSED - WALL	FLUSH WALL MOUNT OUTLET	4-SQUARE DEEP	2-1/8"	1-GANG	(1) 1"	17A	15A, 16A
R23	RECESSED - WALL	FLUSH WALL MOUNT OUTLET	4-SQUARE DEEP	2-1/8"	2-GANG	(1) 1"	4A	2A

GENERAL NOTES:

1. FIRESTOP ALL CONDUIT AND PATHWAY WALL PENETRATIONS.
2. COORDINATE INSTALLATION REQUIREMENTS WITH ARCHITECTURAL DRAWINGS, UNLESS NOTED OTHERWISE.
3. PROVIDE A PULL-STRING AT BOTH CONDUIT PATHWAY ENDS FOR EACH OUTLET. LABEL END OF PULL STRING WITH OUTLET IDENTIFICATION. REFER TO OUTLET FACEPLATE LABEL DETAILS.
4. COORDINATE MOUNTING HEIGHT TO MATCH ADJACENT DEVICES WHERE APPLICABLE. STANDARD OUTLET IS 18" AFF, UNLESS NOTED OTHERWISE.
5. PROVIDE BLANK COVER PLATE FOR UN-USED ROUGH-INS.
6. USE MANUFACTURER KNOCK-OUTS WITH SURFACE MOUNT OUTLETS. VERIFY ORIENTATION OF SURFACE MOUNT BOX KNOCK-OUTS PRIOR TO INSTALLATION.
7. LABEL END OF CABLE PATHWAY CONDUIT WITH OUTLET FACEPLATE LABEL.
8. PROVIDE GROUND BUSHING AT END OF EACH CONDUIT STUB-OUT.

REMARKS:

1A. TERMINATE CONDUIT ABOVE NEAREST ACCESSIBLE CEILING WITHIN SAME ROOM (UNO).
2A. TERMINATE CONDUIT FROM WALL OR CEILING OUTLET ABOVE CEILING WITHIN 12" OF NEAREST CABLE TRAY. PROVIDE #12 BONDING JUMPER FROM CONDUIT TO CABLE TRAY.
3A. SEE ELECTRICAL DRAWINGS FOR POWER AND ADDITIONAL REQUIREMENTS.
4A. MOUNTING HEIGHT TO MATCH ELECTRICAL SWITCH HEIGHT.
5A. ROUTE CONDUIT FROM DATA COMPARTMENT OF FLOOR BOX TO ABOVE ACCESSIBLE CEILING WITHIN SAME ROOM (UNO). REFER TO FLOOR BOX SCHEDULE FOR ADDITIONAL INFORMATION.
6A. ROUTE CONDUIT FROM AV COMPARTMENT OF FLOOR BOX TO WALL OUTLET ROUGH-IN BEHIND FLAT PANEL WALL DISPLAY IN SAME ROOM.
7A. PROVIDE ACCESSIBLE CEILING TILE T-GRID OUTLET BOX SUPPORT HANGER ERICO SNAP-ON OR APPROVED EQUIVALENT.
8A. WALL PHONE OUTLET. LOCATE AT 46" AFF. SEE WALL PHONE DETAIL ON DRAWINGS.
9A. PROVIDE SURFACE RACEWAY AND OUTLET BOX WIREMOLD LEGRAND 2400 SERIES OR APPROVED EQUIVALENT. PROVIDE COVER CLIPS WHEN JOINING PIECES OF COVER.
10A. PROVIDE CONDUIT FEED FITTING AT END OF RACEWAY (ABOVE ACCESSIBLE CEILING OR AT WALL PENETRATION).
11A. INSTALL CABLE IN EXISTING WALL CAVITY AND PROVIDE PULL-STRING. REAM EDGES OF WALL CAVITY TO PREVENT CABLE DAMAGE. PROVIDE GROMMET AT METAL STUD WALLS.
12A. TERMINATE CABLE ON A 2-PORT PLENUM RATED SURFACE MOUNT BOX. PROVIDE SELF-ADHESIVE YELLOW DOT AT CEILING BELOW CABLE SLACK LOCATION. PROVIDE 20' CABLE SLACK.
13A. VERIFY FACEPLATE STYLE PRIOR TO ORDERING.
14A. INSTALL CABLE TO OUTLET IN WALL USING EXISTING CABLE PATH.
15A. ROUTE CONDUIT THROUGH FURNITURE SYSTEM AND HALF-HEIGHT WALL(S) TO NEAREST FULL-HEIGHT WALL, OR TO NEAREST COLUMN THROUGH IN-SLAB CONDUIT. DO NOT EXCEED (2) 90 DEGREE CONDUIT BENDS BETWEEN PULL POINTS.
16A. ROUTE CABLING THROUGH GROMMET IN TABLETOP.
17A. SEE ARCHITECTURAL ELEVATIONS FOR MOUNTING HEIGHT.

SECURITY CAMERA SCHEDULE

LINE	CAMERA NAME	CAMERA MODEL	CAMERA TYPE	CAMERA RESOLUTION	LENS TYPE	FOCAL LENGTH MIN/MAX (mm)		ENCLOSURE TYPE	DETAIL#	CABLE NOTES	CAMERA NOTES
1	1.1	-	-	-	-	-	-	INDOOR DOME	1/T4.5	A	2
2	1.2	-	-	-	-	-	-	INDOOR DOME	2/T4.5	A	2
3	1.3	HANWHA TECHWIN	XNF-8010R	7.3 MP	FIXED	3.6	-	INDOOR DOME	2/T4.5	A	1
4	1.4	HANWHA TECHWIN	XNF-8010R	7.3 MP	FIXED	3.6	-	INDOOR DOME	2/T4.5	A	1
5	1.5	HANWHA TECHWIN	XNF-8010R	7.3 MP	FIXED	3.6	-	INDOOR DOME	2/T4.5	A	1
6	1.6	HANWHA TECHWIN	XNF-8010R	7.3 MP	FIXED	3.6	-	INDOOR DOME	2/T4.5	A	1
7	1.7	HANWHA TECHWIN	XNF-8010R	7.3 MP	FIXED	3.6	-	INDOOR DOME	2/T4.5	A	1
8	1.8	-	-	-	-	-	-	INDOOR DOME	2/T4.5	A	2
9	1.9	-	-	-	-	-	-	INDOOR DOME	2/T4.5	A	2
10	1.10	-	-	-	-	-	-	INDOOR DOME	1/T4.5	A	2
11	1.11	-	-	-	-	-	-	INDOOR DOME	1/T4.5	A	2
12	1.12	HANWHA TECHWIN	XND-8020R	5MP	FIXED	3.7	3.7	INDOOR DOME	2/T4.5	A	-
13	1.13	HANWHA TECHWIN	XND-8020R	5MP	FIXED	3.7	3.7	INDOOR DOME	2/T4.5	A	-
14	1.14	-	-	-	-	-	-	INDOOR DOME	2/T4.5	A	2
15	1.15	HANWHA TECHWIN	QNV-6082R	2MP	VARIFOCAL	3.2	10	INDOOR DOME	2/T4.5	A	-
16	1.16	HANWHA TECHWIN	QNV-6082R	2MP	VARIFOCAL	3.2	10	INDOOR DOME	2/T4.5	A	-
17	1.17	HANWHA TECHWIN	QND-6082R	2MP	VARIFOCAL	3.2	10	INDOOR DOME	2/T4.5	A	-
18	1.18	HANWHA TECHWIN	QND-6082R	2MP	VARIFOCAL	3.2	10	INDOOR DOME	2/T4.5	A	-
19	E.1	-	-	-	-	-	-	OUTDOOR DOME	-	A	3
20	E.2	-	-	-	-	-	-	OUTDOOR DOME	-	A	3
21	E.3	-	-	-	-	-	-	OUTDOOR DOME	-	A	3

CAMERA NOTES:

1. CAMERA SHALL PROVIDE A 180 DEGREE FIELD OF VIEW.
2. EXISTING CAMERA RELOCATED WITH NEW CABLING.
3. EXISTING CAMERA PROVIDED WITH NEW CABLING. EXISTING MOUNT TO BE REUSED UNLESS DEEMED UNUSABLE.

CABLE NOTES:

A. CATEGORY 6 CABLE.

GENERAL NOTES:

1. REFER TO 28 2300 FOR ADDITIONAL INFORMATION REGARDING THE ELECTRONIC VIDEO SURVEILLANCE SYSTEM
2. REFER TO COPPER RISER FOR CONNECTIVITY INFORMATION.
3. REVIEW FINAL FOV WITH OWNER AS PART OF FINAL INSPECTIONS.
4. VERIFY FINAL MOUNTING HEIGHTS OF EXTERIOR BUILDING MOUNT CAMERA WITH ARCHITECT.
5. UNLESS NOTED OTHERWISE ALL CAMERAS TO BE RECORDED AT FULL RESOLUTION AND 10 FPS.
6. PROVIDE LENSES THAT ARE RATED FOR THE RESOLUTION OF THE CAMERA BEING PROVIDED
7. THE VARI-FOCAL LENS RANGE STATED IS APPROXIMATE. PROVIDE A VARIFOCAL LENS WITH A MIN NO GREATER THAN AND A MAX NO LESS THAN .5mm FROM THE VALUE STATED IN THE CAMERA SCHEDULE

© COPYRIGHT 2022 AE# 20208261
Permission to reproduce all or part of this drawing is hereby granted solely for the limited purpose of construction of this project or archiving. Unauthorized copying, disclosure or construction use without written permission of Alvine Engineering is prohibited by copyright law.

NOTE:
DO NOT SCALE DRAWINGS. VERIFY ALL DIMENSIONS and clearances from ARCHITECTURAL, STRUCTURAL, shop and other appropriate drawing or at site. lay out and coordinate all work prior to installation to provide clearances required for operation, maintenance, and codes and verify non-interference with other work. DO NOT FABRICATE PRIOR TO VERIFICATION OF CLEARANCE FOR ALL TRADES. READ SPECIFICATIONS.

IP DESIGN GROUP
CONSULTING + DESIGN
www.ipdesigngroup.com

THE MCKINNEY PARTNERSHIP
architects
3600 West Main
Suite 200
Norman, Oklahoma
73072
405.360.1400 p
405.364.8287 f
tmparch.com

Copyright © 2008 The McKinney Partnership Architects, P.C., All Rights Reserved

Seal:

Project:

City of Norman
Municipal Complex Renovation
Municipal Court
321 N. Webster Avenue
Norman, OK

Issue Date:
11/15/22 ISSUED FOR BIDDING

Revisions:

Project Number:
CM083319

Sheet Title:
SCHEDULES - TELECOM

Sheet Number:
T5.0

November 11, 2022 9:27 AM Tyler Bailey

LOUDSPEAKER SCHEDULE

No	LOUDSPEAKER						ENGINEERING NOTES					
	MANUFACTURER	TYPE	SERIES	CATALOG No.	SHORT DESCRIPTION	FINISH	LONG DESCRIPTION	IMPEDANCE	TRANSFORMER TAPS	SENSITIVITY	FREQUENCY RESPONSE	REMARKS
1	SOUNDTUBE	IN-CEILING	DANTE	IPD4-CM62-BGM	6" DANTE IN-CEILING	WHITE	6" IP-ADDRESSABLE, DANTE ADDRESSABLE IN-CEILING POE SPEAKER	N/A	N/A	N/A	80Hz-20kHz	1A
2	SOUNDTUBE	IN-CEILING	CM-EZ	CM62-BGM	6" FULL RANGE	WHITE	6" COAXIAL IN-CEILING SPEAKER	16 OHMS	25V/70V/100V	85 dB	54Hz-20kHz	
3	INNOVOX	DESKTOP	AE	MICROLIFT-VC	2.5" LOW PROFILE	BLACK	2.5" ULTRA-SLIM 2-WAY TABLETOP SPEAKER	4 OHMS	25V/70V	85 dB	150Hz-20kHz	
4	INNOVOX	WALL	SLIM LINE	SL-1.1 US	4" SLIM PROFILE	BLACK	4" SLIM 2-WAY SURFACE-MOUNT WALL SPEAKER	8 OHMS	70V	89 dB	130Hz-20kHz	

GENERAL NOTES
- A CONTRACTOR TO VERIFY SPEAKER CATALOG NUMBER AND INSTALLATION REQUIREMENTS PRIOR TO ORDERING.
- B COORDINATE LOUDSPEAKER FINISH DURING SUBMITTAL PROCESS.
- C PROVIDE LOUDSPEAKER WITH ALL REQUIRED MOUNTING HARDWARE.
- D COORDINATE LOUDSPEAKER BACKBOX ENCLOSURE INSTALLATION WITH THE ELECTRICAL CONTRACTOR.
- E COORDINATE MOUNTING DETAILS AND AIMING WITH CONSULTANT PRIOR TO INSTALLATION

REMARKS
- 1A TERMINATE DATA CABLING IN ADJACENT ACCESSIBLE CEILING SPACE AND PROVIDE PATCH CORD TO LOUDSPEAKER IN LOCATIONS WHERE LOUDSPEAKER IS INSTALLED ABOVE AN INACCESSIBLE CEILING.

PROJECTION SCREEN SCHEDULE

No	MANUFACTURER	TYPE	MODEL	ASPECT RATIO	DIAGONAL (HEIGHT X WIDTH)	SURFACE MATERIAL	MOUNTING HEIGHT	BLACK DROP	VENEER	REMARKS
1	DRAPER	FIXED	CINEPERM	16:10	137" (73" X 116")	MATT WHITE XT1000V	30" AFF TO BOTTOM OF SCREEN	NONE	BLACK	-

GENERAL NOTES
1. CONTRACTOR TO VERIFY SCREEN CATALOG NUMBER AND INSTALLATION REQUIREMENTS PRIOR TO ORDERING.
2. PROVIDE ALL NECESSARY MOUNTING HARDWARE AS SPECIFIED BY MANUFACTURER
3. FOR SPECIFIC ROOMS AND QUANTITIES REFER TO FLOOR PLAN DRAWINGS
4. COORDINATE FINISH OF PROJECTION SCREEN HOUSING WITH ARCHITECT DURING SUBMITTAL PHASE.

PROJECTOR SCHEDULE

No	MANUFACTURER	MODEL	ASPECT RATIO	MINIMUM RESOLUTION	MOUNTING TYPE	LUMEN OUTPUT	THROW RANGE	LENS	REMARKS
1	PANASONIC	PT-VMZ60U	16:10	WUXGA: 1920 x 1200	FIXED CEILING MOUNT	6,000	12'8'-20'8"	STANDARD	-

GENERAL NOTES
1. CONTRACTOR TO VERIFY PROJECTOR CATALOG NUMBER AND INSTALLATION REQUIREMENTS PRIOR TO ORDERING.
2. PROVIDE ALL NECESSARY MOUNTING HARDWARE AS SPECIFIED BY MANUFACTURER
3. FOR SPECIFIC ROOMS AND QUANTITIES REFER TO FLOOR PLAN DRAWINGS
4. COORDINATE FINISH OF PROJECTOR AND PROJECTOR MOUNT WITH ARCHITECT DURING SUBMITTAL PHASE.

VIDEO DISPLAY SCHEDULE

No	MANUFACTURER	SERIES	ORIENTATION	RESOLUTION	IMAGE SIZE	MOUNTING HEIGHT (TO CENTER OF DISPLAY)	MOUNT	INTERACTIVE	REMARKS
1	SAMSUNG	AU8000	LANDSCAPE	4K: 3840 x 2160	85'	60'	CHIEF XTM1U	NO	
2	SHARP	E242N-BK	LANDSCAPE	FULL HD: 1920 x 1080	23.8"	REMARK 3	ERGOMART SL102 OR MOUNT-IT! MI-765	NO	1
3	SAMSUNG	QB-R	LANDSCAPE	4K: 3840 x 2160	75'	60'	CHIEF TS525TU	NO	2

GENERAL NOTES
- A MOUNTING HEIGHT INDICATES CENTER OF DISPLAY ABOVE FINISH FLOOR.
- B IN THE EVENT THE ABOVE DISPLAY MODELS ARE NOT AVAILABLE, PROVIDE AN RFI FOR APPROVAL OF SUBSTITUTE MODEL THAT MEETS THE LISTED REQUIREMENTS.
- C PROVIDE ALL NECESSARY MOUNTING HARDWARE AS SPECIFIED BY MANUFACTURER.
- D CONTRACTOR TO VERIFY MODEL NUMBERS AND INSTALLATION REQUIREMENTS PRIOR TO ORDERING.
- E REFER TO ARCHITECTURAL DETAILS AND ELEVATIONS FOR DISPLAY LOCATIONS.

REMARKS
1. PROVIDE SL102 MOUNT FOR DISPLAYS LOCATED ON TABLETOP; PROVIDE MI-765 MOUNT FOR DISPLAYS LOCATED ON WALL.
2. DIGITAL SIGNAGE DISPLAY.
3. REFER TO ARCHITECTURAL ELEVATIONS.

ACCESS CONTROL OPENING SCHEDULE

DOOR NUMBER	DETAIL/SHEET NUMBER	TERMINATION POINT	ACCESS CONTROL DEVICE			ACCESS CONTROL DEVICE (OUTBOUND)			ELECTRIFIED DOOR HARDWARE					ELECTRIC DOOR STRIKE		MAG-LOCK				DOOR POSITION SWITCH				REQUEST-TO-EXIT DEVICE		AUXILIARY DEVICE		ADA OPERATOR	REMARKS
			PROXIMITY	MULLION	KEYPAD	PROXIMITY	MULLION	KEYPAD	REQUEST-TO-EXIT SWITCH	LATCH MONITOR SWITCH	ELECTRIC TRIM	ELECTRIC LATCH RETRACTION	DELAYED EGRESS	NO OPTIONS	INTEGRATED LATCH MONITOR	NO OPTIONS	INTEGRATED DOOR POSITION SWITCH	INTEGRATED REQUEST - TO - EXIT MOTION	DELAYED EGRESS	RECESSED	SURFACE MOUNT	GATE	OVERHEAD DOOR	MOTION SENSOR	PUSH BUTTON	KEY SWITCH	SOUNDER		
101	4/T4.5	IT 139	X						X		X									X									6
107	5/T4.5	IT139		X					X		X									X									
125	4/T4.5	IT 139	X						X		X		X							X									6
139	4/T4.5	IT 139	X						X		X									X									
140	4/T4.5	IT 139	X						X		X									X									
146	7/T4.2	IT 139		X					X		X									X									
E1	3/T4.2	IT 139																		X									
E3	6/T4.5	IT 139																		X									
E4	6/T4.5	IT 139																		X									
E5	4/T4.5	IT 139		X					X		X									X									5
E6	4/T4.2	IT 139																		X									
E7	4/T4.5	IT 139		X					X		X									X									5

GENERAL NOTES:
1. REFER TO SPECIFICATION 28 1300 FOR ADDITIONAL INFORMATION REGARDING THE ACCESS CONTROL SYSTEM
2. REFER TO DIVISION 8 DOOR HARDWARE SPECIFICATIONS FOR DOOR HARDWARE DETAILS

REMARKS:
1. DOUBLE DOOR WITH BOTH DOORS CONTROLLED AND MONITORED
2. DOUBLE DOOR WITH ONE DOOR CONTROLLED AND BOTH DOORS MONITORED
3. LOCATE CARD READER ADJACENT TO OUTSIDE ADA BUTTON
4. PROVIDE TWO DOOR POSITION SWITCHES FOR EACH DOOR FOR LEAF, ONE FOR EAC AND ONE FOR IDS.
5. REUSE EXISTING DEVICES AND HARDWARE LOCATED AT DOOR.
6. PROVIDE EXISTING DEVICES AND HARDWARE FROM DEMOLISHED DOOR.

FLOOR BOX AND POKE THRU SCHEDULE

MARK	FLOOR BOX	POKE THRU	MANUFACTURER	MODEL NO.	COVER	COMPARTMENTS (QTY.)				CONDUIT (PER COMPARTMENT, UNO)				REMARKS
						POWER	VOICE/DATA	AV	SPARE	POWER	AV	VOICE/DATA	SPARE	
1	X		LEGRAND	RFB2E-OG	6CT2AA	1	1	0	0	(1) 1"	0	(1) 1"	0	1A
2	X		LEGRAND	EFB45S-OG	EFB45BTAL	1	1	1	1	(1) 1"	(1) 1-1/4"	(1) 1"	0	2A
3	X		LEGRAND	EFB6S-OG	EFB610BTBK	1	1	4	0	(1) 1"	(2) 1-1/4"	(1) 1"	0	3A

GENERAL NOTES
- a CONTRACTOR TO VERIFY CATALOG NUMBER AND INSULATION REQUIREMENTS PRIOR TO ORDERING.
- b PROVIDE ACCESSORIES AS REQUIRED FOR DEVICE INSTALLATION. PROVIDE MANUFACTURER'S STANDARD BLANK PLATES AS REQUIRED FOR UNUSED BOX COMPARTMENTS.
- c COORDINATE VOICE/DATA REQUIREMENTS WITH INSTALLING CONTRACTOR.
- d UNLESS NOTED OTHERWISE, ROUTE LOW-VOLTAGE AND SPARE CONDUITS TO ABOVE ACCESSIBLE CEILING IN SAME ROOM AS THE FLOOR BOX/POKE THRU. TERMINATE WITH INSULATING BUSHINGS.
- e COORDINATE EXACT LOCATION WITH ARCHITECT/OWNER.
- f VERIFY FINISH/COLOR WITH ARCHITECT.

REMARKS
- 1A. PROVIDE (1) RFB6RT FOR POWER COMPARTMENT AND (1) RFB6RT FOR VOICE/DATA COMPARTMENT.
- 2A. PROVIDE (1) EFB10-DP FOR POWER COMPARTMENT, (1) EFB10-DP FOR VOICE/DATA COMPARTMENT, (1) EFB10-DEC FOR AV COMPARTMENT, AND (1) EFB10-B FOR SPARE.
- 3A. INSTALL (1) AV CONDUIT TO EACH SIDE MODULE FOR TOTAL OF (2) AV CONDUITS.

© COPYRIGHT 2022 AE# 20208261
Permission to reproduce all or part of this drawing is hereby granted solely for the limited purpose of construction of this project or archiving. Unauthorized copying, disclosure or construction use without written permission of Alvine Engineering is prohibited by copyright law.

NOTE:
DO NOT SCALE DRAWINGS. VERIFY ALL DIMENSIONS and clearances from ARCHITECTURAL, STRUCTURAL, shop and other appropriate drawing or at site. lay out and coordinate all work prior to installation to provide clearances required for operation, maintenance, and codes and verify non-interference with other work. DO NOT FABRICATE PRIOR TO VERIFICATION OF CLEARANCE FOR ALL TRADES. READ SPECIFICATIONS.

IP DESIGN GROUP
CONSULTING + DESIGN
www.ipdesigngroup.com

THE MCKINNEY PARTNERSHIP architects
3600 West Main
Suite 200
Norman, Oklahoma
73072
405.360.1400 p
405.364.8287 f
tmparch.com

Copyright © 2008 The McKinney Partnership Architects, P.C., All Rights Reserved

Seal:

Project:
City of Norman
Municipal Complex Renovation
Municipal Court
321 N. Webster Avenue
Norman, OK

Issue Date:
11/15/22 ISSUED FOR BIDDING

Revisions:

Project Number:
CM083319

Sheet Title:
SCHEDULES - TELECOM

Sheet Number:
T5.1

November 11, 2022 9:27 AM Tyler Bailey