GRIFFIN SOCCER COMPLEX
PHASE 6

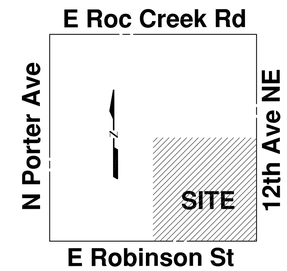

The City of
NORMAN, OK

BREEA CLARK	MAYOR
COUNCIL MEMBERS	
BRANDI STUDLEY	Ward 1
LAUREN SCHUELER	Ward 2
KELLY LYNN	Ward 3
LEE HALL	Ward 4
RARCHAR TORTORELLO	Ward 5
ELIZABETH FOREMAN	Ward 6
STEPHEN HOLMAN	Ward 7
MATTHEW PEACOCK	Ward 8
DARREL PYLE	CITY MANAGER

PDG
PLANNING DESIGN GROUP
LANDSCAPE ARCHITECTURE ♦
RECREATIONAL DESIGN ♦ LAND PLANNING
5314 S. YALE AVE., SUITE 710, TULSA, OK 74135
918.628.1255 918.628.1256 FAX
WWW.PLANNINGDESIGNGROUP.COM

RECOMMENDED FOR APPROVAL

James C. Crosby — 6-3-22

JAMES C. CROSBY, REGISTERED PROFESSIONAL LANDSCAPE ARCHITECT, NO. 121 — DATE

JASON OLSEN, PARKS AND RECREATION DIRECTOR — DATE

REGISTERED LANDSCAPE ARCHITECT
JAMES C. CROSBY
121
OKLAHOMA

APPROVED AS FINAL PLANS

MAYOR — DATE

CITY CLERK — DATE

BEFORE YOU DIG...
CALL OKIE
1-800-522-6543

ADA NOTES

CONTRACTOR IS RESPONSIBLE FOR ENSURING THAT ALL SIDEWALKS AND ACCESS RAMPS COMPLY WITH THE CITY OF NORMAN ADA STANDARD REQUIREMENTS. CONTRACTOR SHALL NOTIFY THE ENGINEER OR ENGINEER'S DESIGNEE FOR ANY DISCREPANCIES BETWEEN DESIGN INFORMATION AND THE CITY OF NORMAN STANDARD REQUIREMENTS PRIOR TO CONSTRUCTION.

EROSION CONTROL NOTES

A COPY OF THE EROSION CONTROL SITE PLAN MUST BE ON SITE AT ALL TIMES AND MADE AVAILABLE TO THE INSPECTOR UPON REQUEST.
THE CONTRACTOR SHALL BE RESPONSIBLE FOR THE REPAIR OR REPLACEMENT OF ALL EROSION CONTROL DEVICES DAMAGED DUE TO CONSTRUCTION.
INDICATE PROCEDURES FOR RE-VEGETATION OF DISTURBED AREAS FOR PERMANENT STABILIZATION.

NOTES

A STORM WATER DISCHARGE PERMIT IS REQUIRED BEFORE ANY LAND DISTURBING ACTIVITIES CAN BEGIN.
THE CONTRACTOR IS RESPONSIBLE FOR THE PROMPT REPLACEMENT AND/OR REPAIR OF ALL TRAFFIC CONTROL DEVICES AND APPURTENANCES DAMAGED OR DISTURBED DUE TO CONSTRUCTION.
CONTRACTOR WILL BE REQUIRED TO OBTAIN STORMWATER QUALITY PERMIT, SWPPP, AND FILE N.O.I.

NOTES

CONSTRUCTION ACTIVITIES THAT RESULT IN LAND DISTURBANCE OF EQUAL TO OR GREATER THAN ONE(1) ACRE, OR LESS THAN ONE(1) ACRE IF THEY ARE PART OF A LARGER COMMON PLAN OF DEVELOPMENT OF SALE THAT TOTALS AT LEAST ONE(1) ACRE MUST OBTAIN A PERMIT FROM ODEQ (FORM 605-002A) FOR STORM WATER DISCHARGES FROM CONSTRUCTION ACTIVITIES. THIS MEANS THAT LAND DISTURBING OF ONE ACRE OR MORE MUST PERMIT WITH ODEQ AND THE CITY OF NORMAN, STORM WATER QUALITY.

NO.	SHEET TITLE	NO.	SHEET TITLE
I	COVER	A6.00C	SCHEDULES, DOOR ELEVATIONS & DOOR DETAILS
IN-1	INDEX SHEET	A6.00R	INTERIOR ELEVATIONS, SCHEDULES, DOOR & PARTITION TYPES
EC-1	NOTES AND LEGEND	A6.10C	INTERIOR ELEVATIONS
DP-1	DEMOLITION PLAN	A6.11C	INTERIOR ELEVATIONS
SP-1	OVERALL SITE PLAN	A7.00	SPECIFICATIONS
LP-1	LAYOUT PLAN	A7.01	SPECIFICATIONS
LP-2	LAYOUT PLAN	S0.00	GENERAL NOTES
LP-3	LAYOUT PLAN	S0.10	SPECIAL INSPECTIONS
LP-4	LAYOUT PLAN	S1.00C	FRAMING DETAILS
LP-5	LAYOUT PLAN	S1.00R	FOUNDATION AND FRAMING PLANS
G-1	OVERALL GRADING PLAN	S2.00C	FOUNDATION DETAILS
G-2	GRADING PLAN	S2.00R	FOUNDATION DETAILS
G-3	GRADING PLAN	S2.01C	FOUNDATION DETAILS
G-4	GRADING PLAN	S3.00C	FRAMING DETAILS
G-5	GRADING PLAN	S3.00R	FRAMING DETAILS
G-6	GRADING PLAN	S3.01C	FRAMING DETAILS
C1.0	OVERALL SITE GENERAL LAYOUT	M1.00	MECHANICAL LEGEND & ABBREVIATIONS
C2.0	SITE DIMENSIONAL PLAN	M2.00C	PLUMBING PLANS
C2.1	SITE DIMENSIONAL PLAN	M2.00R	PLUMBING PLANS
C2.2	SITE DIMENSIONAL PLAN	M3.00C	MECHANICAL PLANS
C2.3	SITE DIMENSIONAL PLAN	M3.00R	MECHANICAL PLANS
C2.4	SITE DIMENSIONAL PLAN	M4.00C	MECHANICAL SCHEDULES & DETAILS
C3.0	PAVING PLAN	M4.00R	MECHANICAL SCHEDULES & DETAILS
C3.1	GRADING PLAN	M5.00C	MECHANICAL SPECIFICATIONS
C3.2	GRADING PLAN	M5.00R	MECHANICAL SPECIFICATIONS
C3.3	GRADING PLAN	M5.01C	MECHANICAL SPECIFICATIONS
C3.4	GRADING PLAN	M5.01R	MECHANICAL SPECIFICATIONS
C3.5	GRADING PLAN	E1.00	ELECTRICAL LEGEND & ABBREVIATIONS
C4.0	UTILITY PLAN	E1.01	ELECTRICAL SITE PLAN
C4.1	UTILITY PLAN	E2.01	CONCESSIONS LIGHTING & POWER FLOOR PLANS
C4.2	UTILITY PLAN	E2.02	RESTROOMS LIGHTING & POWER FLOOR PLANS
C5.0	DETAILS	E3.01	CONCESSIONS MECHANICAL POWER & SYSTEMS FLOOR PLANS
C5.1	DETAILS	E3.02	RESTROOMS MECHANICAL POWER & SYSTEMS FLOOR PLANS
A1.10C	OVERALL FLOOR PLAN	E4.01	ONE LINE DIAGRAM AND PANEL SCHEDULES
A1.10R	OVERALL FLOOR PLAN & ROOF PLAN	E5.01	ELECTRICAL SPECIFICATIONS
A1.20C	ROOF PLAN	LS-1	OVERALL GRASSING & SITE TREE PLAN
A1.50C	ENL. RESTROOM PLANS	LS-2	GRASSING PLAN
A2.10C	REFLECTED CEILING PLAN	LS-3	GRASSING PLAN
A2.10R	REFLECTED CEILING PLAN	LS-4	GRASSING PLAN
A3.00C	EXTERIOR ELEVATIONS	LS-5	GRASSING PLAN
A3.00R	EXTERIOR ELEVATIONS	LS-6	GRASSING PLAN
A4.00C	BUILDING SECTIONS	IR-1	OVERALL IRRIGATION PLAN
A4.00R	BUILDING SECTIONS & WALL SECTION	IR-2	FIELD 12 & 13 IRRIGATION PLAN
A5.00C	WALL SECTIONS	IR-3	FIELD 14 & 15 IRRIGATION PLAN
A5.00R	WALL SECTIONS	IR-4	FIELD 16 IRRIGATION PLAN
A5.01C	WALL SECTIONS	IR-5	FIELD 17 IRRIGATION PLAN
A5.10C	DETAILS	IR-6	FIELD 18 & 21 IRRIGATION PLAN
A5.10R	DETAILS	IR-7	IRRIGATION DETAILS
A5.11C	DETAILS	D-1	CONSTRUCTION DETAILS
A5.11R	DETAILS	D-2	EROSION CONTROL DETAILS

PDG
PLANNING DESIGN GROUP
LANDSCAPE ARCHITECTURE + RECREATIONAL DESIGN + LAND PLANNING
5314 S. YALE AVE., SUITE 710, TULSA, OK 74135
918.628.1255 918.628.1256 FAX
WWW.PLANNINGDESIGNGROUP.COM

REGISTERED LANDSCAPE ARCHITECT
JAMES C. CROSBY
121
OKLAHOMA
5-19-22

JAMES C. CROSBY, ASLA
LANDSCAPE ARCHITECT OF RECORD

PROJECT INFORMATION

PROJECT ADDRESS:

1001 E. ROBINSON ST.,
NORMAN, OKLAHOMA 73071

PROJECT NO.	NA
DATE	04/29/22
DRAWN BY	CHECKED BY
AB	GE

GRIFFIN SOCCER COMPLEX
PHASE 6
NORMAN, OKLAHOMA

ISSUE/ REVISIONS

06/03/22	BID SET

OWNER:

THE CITY OF NORMAN PARKS & RECREATION
201-C WEST GRAY
NORMAN, OK 73069
(405) 366-5472

IN-1

INDEX SHEET

1 EXISTING CONDITIONS- PLAN VIEW

SCALE: 1" = 50'-0"

100 0 50 100 200

NORTH

BEFORE YOU DIG ...
1-800-522-6543
CALL OKIE

DUTY OF COOPERATION

P.D.G., INC. dba PLANNING DESIGN GROUP IN THIS STATEMENT SHALL BE KNOWN AS 'ARCHITECT'. RELEASE OF THESE PLANS CONTEMPLATES FURTHER COOPERATION AMONG THE OWNER, HIS CONTRACTOR, AND THE ARCHITECT. DESIGN AND CONSTRUCTION ARE COMPLEX. ALTHOUGH THE ARCHITECT AND HIS CONSULTANTS HAVE PERFORMED THEIR SERVICES WITH DUE CARE AND DILIGENCE, THEY CANNOT GUARANTEE PERFECTION. COMMUNICATION IS IMPERFECT AND EVERY CONTINGENCY CANNOT BE ANTICIPATED. ANY AMBIGUITY OR DISCREPANCY DISCOVERED BY THE USE OF THESE PLANS SHALL BE REPORTED IMMEDIATELY TO THE ARCHITECT. FAILURE TO NOTIFY THE ARCHITECT COMPOUNDS MISUNDERSTANDING AND INCREASES CONSTRUCTION COSTS. A FAILURE TO COOPERATE BY SIMPLE NOTICE TO THE ARCHITECT SHALL RELIEVE THE ARCHITECT FROM RESPONSIBILITY FOR ALL CONSEQUENCES. CHANGES MADE FROM THE PLANS WITHOUT CONSENT OF THE ARCHITECT ARE UNAUTHORIZED AND SHALL RELIEVE THE ARCHITECT OF RESPONSIBILITY FOR ALL CONSEQUENCES ARRIVING OUT OF SUCH CHANGES.

COPYRIGHT NOTICE

P.D.G., INC. dba PLANNING DESIGN GROUP RESERVE THEIR COMMON-LAW COPYRIGHT AND OTHER PROPERTY RIGHTS IN THESE PLANS. THESE PLANS AND DRAWINGS ARE NOT TO BE REPRODUCED, CHANGED OR COPIED IN ANY FORM OR MANNER WHATSOEVER WITHOUT FIRST OBTAINING THE EXPRESS WRITTEN PERMISSION AND CONSENT OF P.D.G., INC. NOR ARE THEY TO BE ASSIGNED TO ANY THIRD PARTY WITHOUT OBTAINING SAID WRITTEN PERMISSION AND CONSENT.

BASE INFORMATION

ALL BASE INFORMATION INCLUDING EXISTING DRAINAGE WAYS, EXISTING CONTOURS, EXISTING VEGETATION, EXISTING STRUCTURES AND STREETS HERE PROVIDED TO PLANNING DESIGN GROUP BASED FROM DATA COLLECTED BY JOHNSON & ASSOCIATES INC., OKLAHOMA CITY, OK.

PDG
PLANNING DESIGN GROUP
LANDSCAPE ARCHITECTURE •
RECREATIONAL DESIGN • LAND PLANNING
5314 S. YALE AVE., SUITE 710, TULSA, OK 74135
918.628.1255 918.628.1256 FAX
WWW.PLANNINGDESIGNGROUP.COM

REGISTERED LANDSCAPE ARCHITECT
JAMES C. CROSBY
121
OKLAHOMA
6-30-22

JAMES C. CROSBY, ASLA
LANDSCAPE ARCHITECT OF RECORD

PROJECT INFORMATION

PROJECT ADDRESS:

1001 E. ROBINSON ST.,
NORMAN, OKLAHOMA 73071

PROJECT NO.	NA
DATE	04/29/22
DRAWN BY	CHECKED BY
AB	GE

GRIFFIN SOCCER COMPLEX
PHASE 6
NORMAN, OKLAHOMA

ISSUE/ REVISIONS

06/03/22	BID SET

OWNER:

THE CITY OF NORMAN PARKS & RECREATION
201-C WEST GRAY
NORMAN, OK 73069
(405) 366-5472

EC-1

EXISTING CONDITIONS

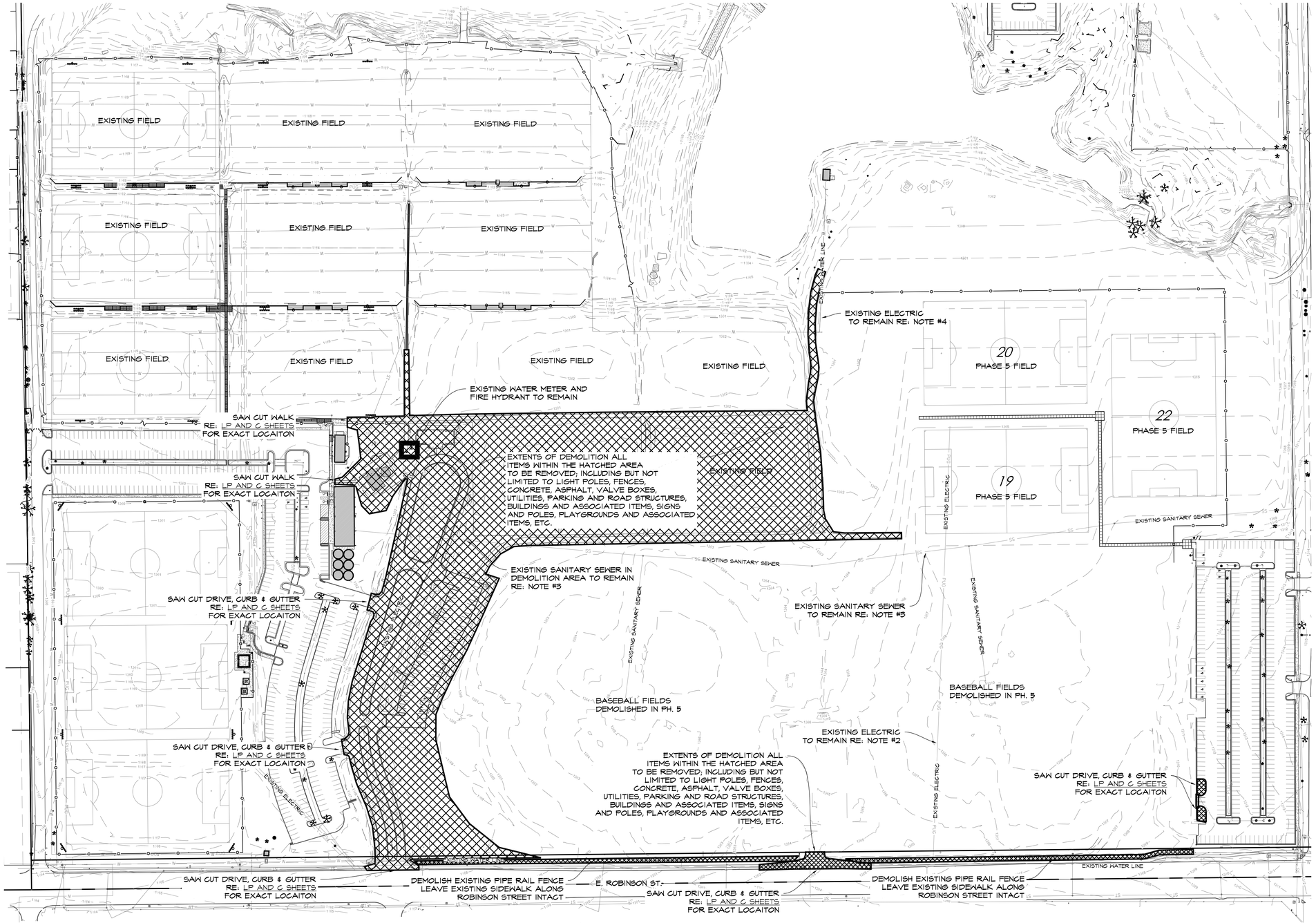

1 DEMOLITION PLAN - PLAN VIEW

SCALE: 1" = 50'-0"

DEMOLITION/CLEARING LEGEND

GENERAL DEMOLITION

UTILITY DEMOLITION NOTES

1. ELECTRICAL SUPPLY ON 12TH AVE. NE: COORDINATE WITH POWER COMPANY THE TERMINATION OF ELECTRICAL SUPPLY FROM THE POWER POLE SHOWN ON THE DEMO PLAN AT 12TH AVE. NE. REMOVE ALL ASSOCIATED ITEMS WITHIN THE CONSTRUCTION ZONE NECESSARY FOR CONSTRUCTION OPERATIONS.
2. ELECTRICAL SUPPLY E. ROBINSON ST.: COORDINATE WITH POWER COMPANY THE TERMINATION OF ELECTRICAL SUPPLY FROM ROBINSON STREET TO THE CONSTRUCTION ZONE, SHOWN ON THE DEMO PLAN. REMOVE ALL ASSOCIATED ITEMS WITHIN THE CONSTRUCTION ZONE NECESSARY FOR CONSTRUCTION OPERATIONS.
3. COORDINATE SEWER LINE REMOVAL TO DEMOLISHED CONCESSION BUILDINGS. REMOVE ALL ASSOCIATED ITEMS WITHIN THE CONSTRUCTION ZONE NECESSARY FOR CONSTRUCTION OPERATIONS. CUT AND PLUG SEWER CONNECTION AT MANHOLE SHOWN ON PLAN.
4. POWER SUPPLY TO PUMP STATION AT POND TO REMAIN IN PLACE AS PART OF THIS CONTRACT AS LABELED ON PLANS

EXISTING UTILITIES

1. CONTRACTOR IS RESPONSIBLE FOR COORDINATING AND PAYING FOR ALL UNDERGROUND UTILITIES TO BE LOCATED. THIS INCLUDED BUT NOT LIMITED TO ALL STORM, SANITARY ETC, WITHIN THE PROJECT LIMITS.

GENERAL DEMOLITION/CLEARING NOTES

1. CONTRACTOR IS TO COORDINATE W/ OWNER AND ARCHITECT PRIOR TO DEMOLITION TO DETERMINE WHICH ITEMS THE OWNER WISHES TO RETAIN AND THE LOCATION THESE ITEMS ARE TO BE DELIVERED TO.
2. CONTRACTOR TO CONDUCT A THOROUGH REVIEW OF PROPERTY TO VERIFY ALL ITEMS SHOWN TO BE DEMOLISHED ON THIS SHEET.
3. ALL TREES, VEGETATION, TRASH, DEBRIS, CONCRETE, ASPHALT, METAL ITEMS, BLEACHERS AND ALL OTHER MATERIAL ON THIS PROJECT TO BE PROPERLY DEMOLISHED AND REMOVED FROM THIS SITE BY CONTRACTOR AS PER SPECIFICATIONS.
4. ALL EXISTING ITEMS THAT ARE TO REMAIN WHICH ARE DAMAGED DURING CONSTRUCTION ARE TO BE RESTORED TO ORIGINAL CONDITIONS. THIS INCLUDES BUT IS NOT LIMITED TO LIGHTS, SIDEWALKS, ASPHALT PAVING, BUILDINGS, CURB & GUTTER, ETC.
5. ALL ITEMS WILL BE COMPLETELY REMOVED FROM DEMOLITION LIMITS UNLESS OTHERWISE DIRECTED, NO ITEMS ARE TO BE DEMOLISHED AND LEFT BELOW GRADE.

DUTY OF COOPERATION

P.D.G., INC. dba PLANNING DESIGN GROUP IN THIS STATEMENT SHALL BE KNOWN AS 'ARCHITECT'. RELEASE OF THESE PLANS CONTEMPLATES FURTHER COOPERATION AMONG THE OWNER, HIS CONTRACTOR, AND THE ARCHITECT. DESIGN AND CONSTRUCTION ARE COMPLEX. ALTHOUGH THE ARCHITECT AND HIS CONSULTANTS HAVE PERFORMED THEIR SERVICES WITH DUE CARE AND DILIGENCE, THEY CANNOT GUARANTEE PERFECTION. COMPLICATION IS IMPERFECT AND EVERY CONTINGENCY CANNOT BE ANTICIPATED. ANY AMBIGUITY OR DISCREPANCY DISCOVERED BY THE USE OF THESE PLANS SHALL BE REPORTED IMMEDIATELY TO THE ARCHITECT. FAILURE TO NOTIFY THE ARCHITECT COMPOUNDS MISUNDERSTANDING AND INCREASES CONSTRUCTION COSTS. A FAILURE TO COOPERATE BY SIMPLE NOTICE TO THE ARCHITECT SHALL RELIEVE THE ARCHITECT FROM RESPONSIBILITY FOR ALL CONSEQUENCES. CHANGES MADE FROM THE PLANS WITHOUT CONSENT OF THE ARCHITECT ARE UNAUTHORIZED AND SHALL RELIEVE THE ARCHITECT OF RESPONSIBILITY FOR ALL CONSEQUENCES ARRIVING OUT OF SUCH CHANGES.

COPYRIGHT NOTICE

P.D.G., INC. dba PLANNING DESIGN GROUP RESERVE THEIR COMMONLAW COPYRIGHT AND OTHER PROPERTY RIGHTS IN THESE PLANS. THESE PLANS AND DRAWINGS ARE NOT TO BE REPRODUCED, CHANGED OR COPIED IN ANY FORM OR MANNER WHATSOEVER WITHOUT FIRST OBTAINING THE EXPRESS WRITTEN PERMISSION AND CONCENT OF P.D.G., INC. NOR ARE THEY TO BE ASSIGNED TO ANY THIRD PARTY WITHOUT OBTAINING SAID WRITTEN PERMISSION AND CONSENT.

BASE INFORMATION

ALL BASE INFORMATION INCLUDING EXISTING DRAINAGE PAYS, EXISTING CONTOURS, EXISTING VEGETATION, EXISTING STRUCTURES AND STREETS HERE PROVIDED TO PLANNING DESIGN GROUP BASED FROM DATA COLLECTED BY JOHNSON & ASSOCIATES INC., OKLAHOMA CITY, OK

BEFORE YOU DIG ...
1-800-522-6543
CALL OKIE

PDG
PLANNING DESIGN GROUP
LANDSCAPE ARCHITECTURE + RECREATIONAL DESIGN + LAND PLANNING
5314 S. YALE AVE., SUITE 710, TULSA, OK 74135
918.628.1255 918.628.1256 FAX
WWW.PLANNINGDESIGNGROUP.COM

REGISTERED LANDSCAPE ARCHITECT JAMES C. CROSBY 121 OKLAHOMA

JAMES C. CROSBY, ASLA
LANDSCAPE ARCHITECT OF RECORD

PROJECT INFORMATION	
PROJECT ADDRESS:	
1001 E. ROBINSON ST., NORMAN, OKLAHOMA 73071	
PROJECT NO.	NA
DATE	04/29/22
DRAWN BY	CHECKED BY
AB	GE

GRIFFIN SOCCER COMPLEX PHASE 6 NORMAN, OKLAHOMA

ISSUE/ REVISIONS	
06/03/22	BID SET

OWNER:

THE CITY OF NORMAN PARKS & RECREATION
201-C WEST GRAY
NORMAN, OK 73069
(405) 366-5472

DP-1

DEMOLITION PLAN

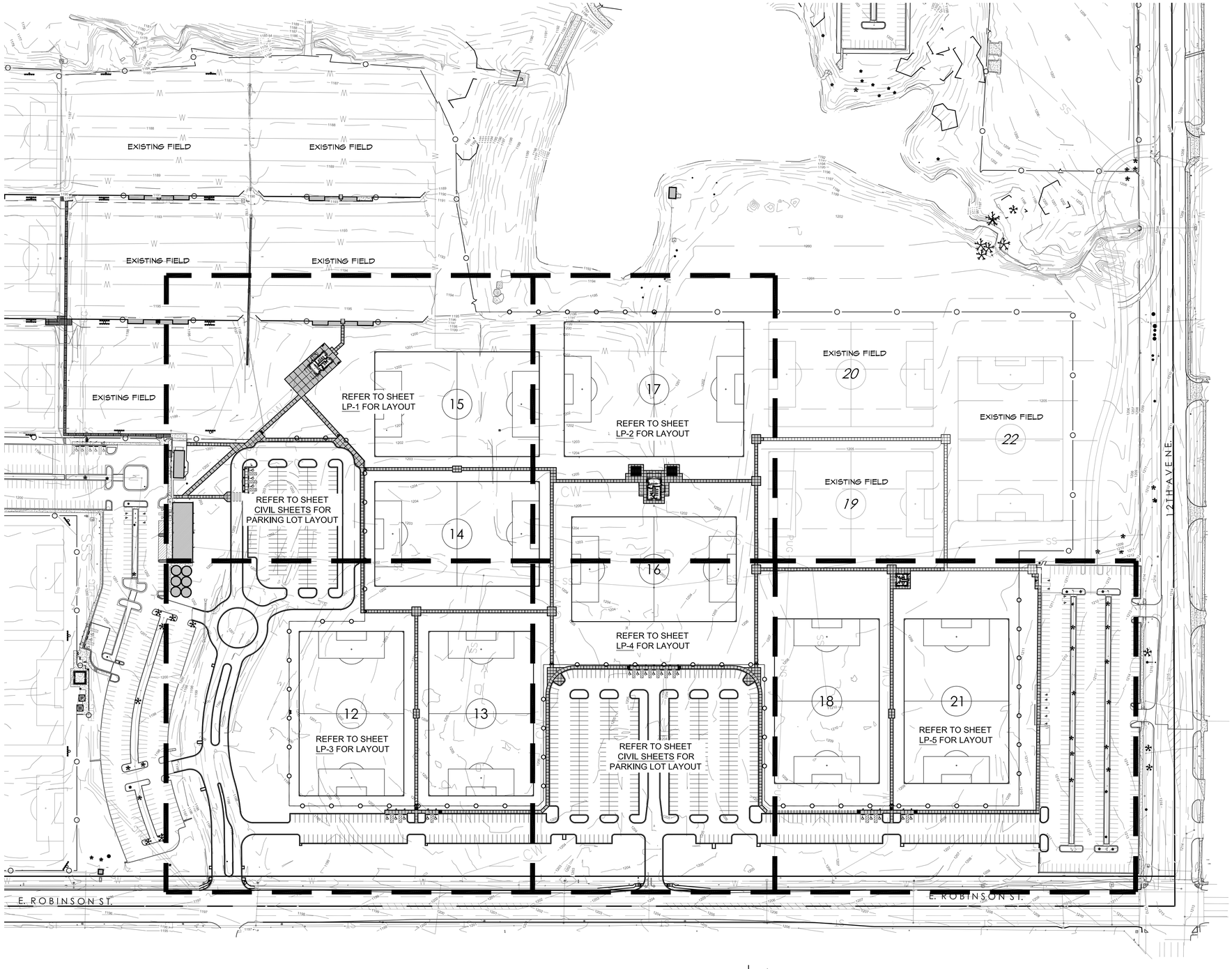

1 OVERALL SITE - PLAN VIEW

SCALE: 1" = 100'-0"

100 0 50 100 200

NORTH

LAYOUT NOTES

1. ALL DIMENSIONS GIVEN ARE HORIZONTAL
2. LANDSCAPE ARCHITECT TO APPROVE FINAL LAYOUT OF ALL FEATURES.
3. CONTRACTOR TO GAIN APPROVAL OF OWNER OR LANDSCAPE ARCHITECT BEFORE ANY DIGGING TAKES PLACE.
4. REFER TO PROJECT DETAILS FOR SPECIFICATIONS, MATERIALS, AND CONSTRUCTION DETAILS.
5. ASSUME ALL DIMENSIONS TO BE GIVEN AT RIGHT ANGLES UNLESS OTHERWISE NOTED ON PLAN.
6. SURVEYOR TO CALCULATE COORDINATES AND STAKE THE LAYOUT OF FEATURES FOR SUB-CONTRACTOR. DIGITAL BASE INFORMATION WILL BE PROVIDED TO CONTRACTOR OR THEIR SURVEYOR. CONTRACTOR IS RESPONSIBLE FOR VERIFICATION OF ALL LAY OUT DATA PRIOR TO LAYOUT OF PROJECT.
7. CONTRACTOR IS RESPONSIBLE FOR INSTALLATION OF ALL SLEEVES FOR UNDERGROUND UTILITIES INCLUDING, BUT NOT LIMITED TO IRRIGATION, WATER FEATURE, AND ELECTRICAL ITEMS.
8. PROVIDED COORDINATES ARE FOR REFERENCE ONLY. CONTRACTOR RESPONSIBLE FOR GATHERING THEIR OWN COORDINATE INFORMATION VIA ELECTRONIC FILES PROVIDED BY DESIGNER/CITY.

DUTY OF COOPERATION

P.D.G., LLC. dba PLANNING DESIGN GROUP IN THIS STATEMENT SHALL BE KNOWN AS 'ARCHITECT'. RELEASE OF THESE PLANS CONTEMPLATES FURTHER COOPERATION AMONG THE OWNER, HIS CONTRACTOR, AND THE ARCHITECT. DESIGN AND CONSTRUCTION ARE COMPLEX. ALTHOUGH THE ARCHITECT AND HIS CONSULTANTS HAVE PERFORMED THEIR SERVICES WITH DUE CARE AND DILIGENCE, THEY CANNOT GUARANTEE PERFECTION. COMMUNICATION IS IMPERFECT AND EVERY CONTINGENCY CANNOT BE ANTICIPATED. ANY AMBIGUITY OR DISCREPANCY DISCOVERED BY THE USE OF THESE PLANS SHALL BE REPORTED IMMEDIATELY TO THE ARCHITECT. FAILURE TO NOTIFY THE ARCHITECT COMPOUNDS MISUNDERSTANDING AND INCREASES CONSTRUCTION COSTS. A FAILURE TO COOPERATE BY SIMPLE NOTICE TO THE ARCHITECT SHALL RELIEVE THE ARCHITECT FROM RESPONSIBILITY FOR ALL CONSEQUENCES. CHANGES MADE FROM THE PLANS WITHOUT CONSENT OF THE ARCHITECT ARE UNAUTHORIZED AND SHALL RELIEVE THE ARCHITECT OF RESPONSIBILITY FOR ALL CONSEQUENCES ARRIVING OUT OF SUCH CHANGES.

COPYRIGHT NOTICE

P.D.G., LLC. dba PLANNING DESIGN GROUP RESERVE THEIR COMMONLAW COPYRIGHT AND OTHER PROPERTY RIGHTS IN THESE PLANS. THESE PLANS AND DRAWINGS ARE NOT TO BE REPRODUCED, CHANGED OR COPIED IN ANY FORM OR MANNER WHATSOEVER WITHOUT FIRST OBTAINING THE EXPRESS WRITTEN PERMISSION AND CONSENT OF P.D.G., LLC. NOR ARE THEY TO BE ASSIGNED TO ANY THIRD PARTY WITHOUT OBTAINING SAID WRITTEN PERMISSION AND CONSENT.

BASE INFORMATION

ALL BASE INFORMATION INCLUDING EXISTING DRAINAGE WAYS, EXISTING CONTOURS, EXISTING VEGETATION, EXISTING STRUCTURES AND STREETS WERE PROVIDED TO PLANNING DESIGN GROUP BASED FROM DATA COLLECTED BY JOHNSON & ASSOCIATES INC., OKLAHOMA CITY, OK

BEFORE YOU DIG ...
1-800-522-6543
CALL OKIE

PDG
PLANNING DESIGN GROUP
LANDSCAPE ARCHITECTURE ★ RECREATIONAL DESIGN ★ LAND PLANNING
5314 S. YALE AVE., SUITE 710, TULSA, OK 74135
918.628.1255 918.628.1256 FAX
WWW.PLANNINGDESIGNGROUP.COM

REGISTERED LANDSCAPE ARCHITECT
JAMES C. CROSBY
121
OKLAHOMA

JAMES C. CROSBY, ASLA
LANDSCAPE ARCHITECT OF RECORD

PROJECT INFORMATION	
PROJECT ADDRESS:	
1001 E. ROBINSON ST., NORMAN, OKLAHOMA 73071	
PROJECT NO.	NA
DATE	04/29/22
DRAWN BY	CHECKED BY
AB	GE

GRIFFIN SOCCER COMPLEX PHASE 6 NORMAN, OKLAHOMA

ISSUE/ REVISIONS	
06/03/22	BID SET

OWNER:

THE CITY OF NORMAN PARKS & RECREATION
201-C WEST GRAY
NORMAN, OK 73069
(405) 366-5472

SP-1

OVERALL SITE PLAN

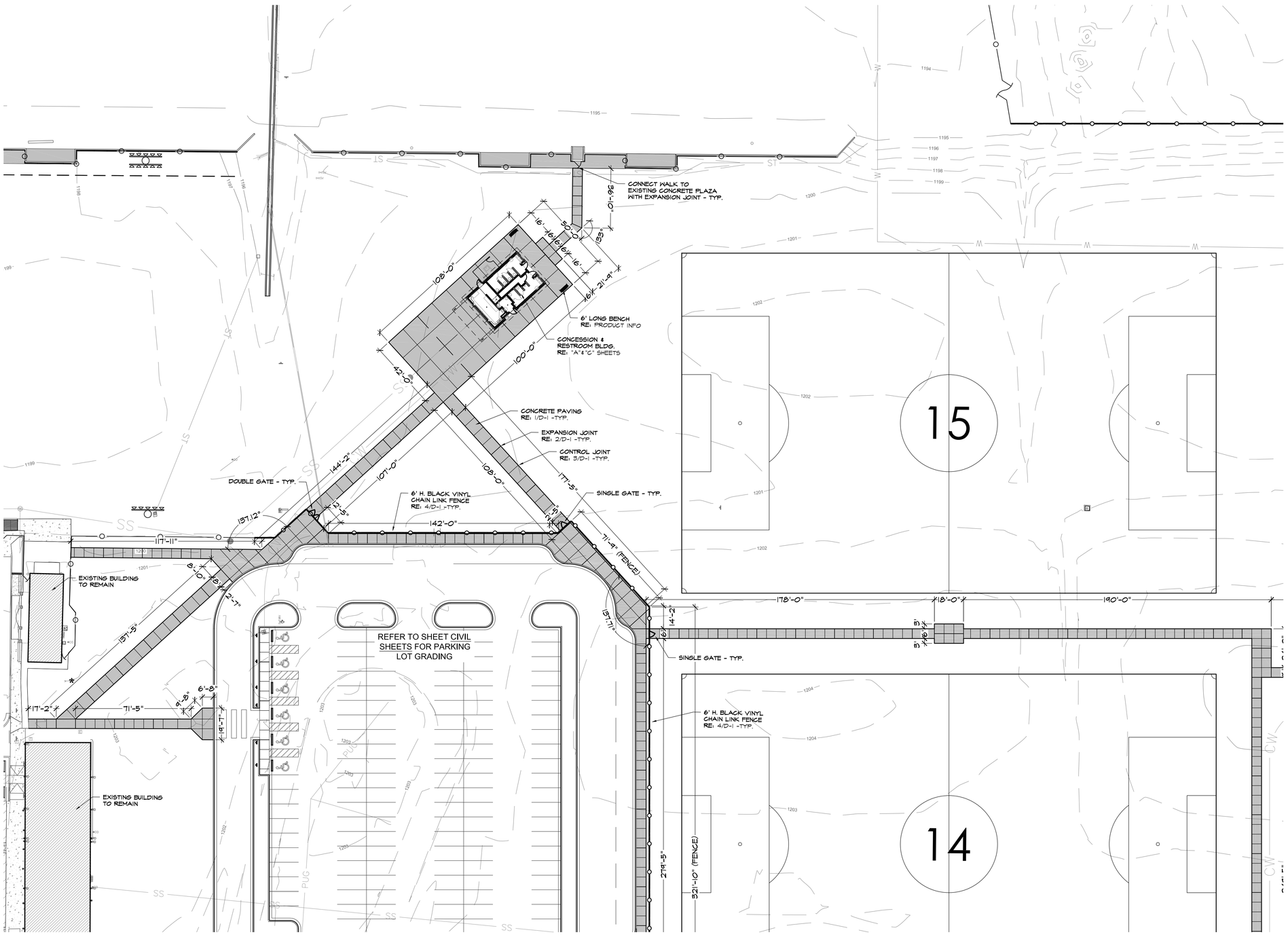

1 LAYOUT - PLAN VIEW

SCALE: 1" = 30'-0"

30 0 15 30 60

NORTH

KEY MAP

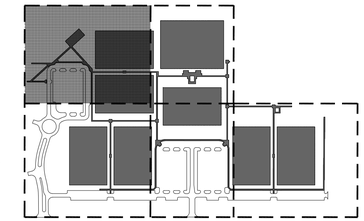

PRODUCT INFORMATION

-6' CLASSIC CASINO SURFACE MOUNT BENCH
-APPROVED PRODUCT NUMBER= B6NBCLASSCASINOSM

VISIONS INNOVATED PRODUCTS, INC. (WEBCOAT),
OR APPROVED EQUAL
PO BOX 3160 MCALLESTER, OK 74501
PH: (800) 505-5101
WEB: WWW.WEBCOAT.COM

***ALL COLORS FOR SITE FURNISHINGS TO BE SELECTED DURING THE SUBMITTAL PROCESS.**

LAYOUT NOTES

1. ALL DIMENSIONS GIVEN ARE HORIZONTAL
2. LANDSCAPE ARCHITECT TO APPROVE FINAL LAYOUT OF ALL FEATURES.
3. CONTRACTOR TO GAIN APPROVAL OF OWNER OR LANDSCAPE ARCHITECT BEFORE ANY DIGGING TAKES PLACE.
4. REFER TO PROJECT DETAILS FOR SPECIFICATIONS, MATERIALS, AND CONSTRUCTION DETAILS.
5. ASSUME ALL DIMENSIONS TO BE GIVEN AT RIGHT ANGLES UNLESS OTHERWISE NOTED ON PLAN.
6. SURVEYOR TO CALCULATE COORDINATES AND STAKE THE LAYOUT OF FEATURES FOR SUB-CONTRACTOR. DIGITAL BASE INFORMATION WILL BE PROVIDED TO CONTRACTOR OR THEIR SURVEYOR. CONTRACTOR IS RESPONSIBLE FOR VERIFICATION OF ALL LAY OUT DATA PRIOR TO LAYOUT OF PROJECT.
7. CONTRACTOR IS RESPONSIBLE FOR INSTALLATION OF ALL SLEEVES FOR UNDERGROUND UTILITIES INCLUDING, BUT NOT LIMITED TO IRRIGATION, WATER FEATURE, AND ELECTRICAL ITEMS.
8. PROVIDED COORDINATES ARE FOR REFERENCE ONLY. CONTRACTOR RESPONSIBLE FOR GATHERING THEIR OWN COORDINATE INFORMATION VIA ELECTRONIC FILES PROVIDED BY DESIGNER/CITY.

DUTY OF COOPERATION

P.D.G., LLC. dba PLANNING DESIGN GROUP IN THIS STATEMENT SHALL BE KNOWN AS 'ARCHITECT'. RELEASE OF THESE PLANS CONTEMPLATES FURTHER COOPERATION AMONG THE OWNER, HIS CONTRACTOR, AND THE ARCHITECT. DESIGN AND CONSTRUCTION ARE COMPLEX. ALTHOUGH THE ARCHITECT AND HIS CONSULTANTS HAVE PERFORMED THEIR SERVICES WITH DUE CARE AND DILIGENCE, THEY CANNOT GUARANTEE PERFECTION. COMMUNICATION IS IMPERFECT AND EVERY CONTINGENCY CANNOT BE ANTICIPATED. ANY AMBIGUITY OR DISCREPANCY DISCOVERED BY THE USE OF THESE PLANS SHALL BE REPORTED IMMEDIATELY TO THE ARCHITECT. FAILURE TO NOTIFY THE ARCHITECT COMPOUNDS MISUNDERSTANDING AND INCREASES CONSTRUCTION COSTS. A FAILURE TO COOPERATE BY SIMPLE NOTICE TO THE ARCHITECT SHALL RELIEVE THE ARCHITECT FROM RESPONSIBILITY FOR ALL CONSEQUENCES. CHANGES MADE FROM THE PLANS WITHOUT CONSENT OF THE ARCHITECT ARE UNAUTHORIZED, AND SHALL RELIEVE THE ARCHITECT OF RESPONSIBILITY FOR ALL CONSEQUENCES ARRIVING OUT OF SUCH CHANGES.

COPYRIGHT NOTICE

P.D.G., LLC. dba PLANNING DESIGN GROUP RESERVE THEIR COMMONLAW COPYRIGHT AND OTHER PROPERTY RIGHTS IN THESE PLANS. THESE PLANS AND DRAWINGS ARE NOT TO BE REPRODUCED, CHANGED OR COPIED IN ANY FORM OR MANNER WHATSOEVER WITHOUT FIRST OBTAINING THE EXPRESS WRITTEN PERMISSION AND CONSENT OF P.D.G., LLC. NOR ARE THEY TO BE ASSIGNED TO ANY THIRD PARTY WITHOUT OBTAINING SAID WRITTEN PERMISSION AND CONSENT.

BASE INFORMATION

ALL BASE INFORMATION INCLUDING EXISTING DRAINAGE WAYS, EXISTING CONTOURS, EXISTING VEGETATION, EXISTING STRUCTURES AND STREETS WERE PROVIDED TO PLANNING DESIGN GROUP BASED FROM DATA COLLECTED BY JOHNSON & ASSOCIATES INC., OKLAHOMA CITY, OK.

BEFORE YOU DIG ...
1-800-522-6543
CALL OKIE

PDG
PLANNING DESIGN GROUP
LANDSCAPE ARCHITECTURE ♦ RECREATIONAL DESIGN ♦ LAND PLANNING
5314 S. YALE AVE., SUITE 710, TULSA, OK 74135
918.628.1255 918.628.1256 FAX
WWW.PLANNINGDESIGNGROUP.COM

REGISTERED LANDSCAPE ARCHITECT
JAMES C. CROSBY
1 2 1
OKLAHOMA

JAMES C. CROSBY, ASLA
LANDSCAPE ARCHITECT OF RECORD

PROJECT INFORMATION	
PROJECT ADDRESS:	
1001 E. ROBINSON ST., NORMAN, OKLAHOMA 73071	
PROJECT NO.	NA
DATE	04/29/22
DRAWN BY	CHECKED BY
AB	GE

GRIFFIN SOCCER COMPLEX PHASE 6 NORMAN, OKLAHOMA

ISSUE/ REVISIONS	
06/03/22	BID SET

OWNER:

THE CITY OF NORMAN PARKS & RECREATION
201-C WEST GRAY
NORMAN, OK 73069
(405) 366-5472

LP-1

LAYOUT PLAN

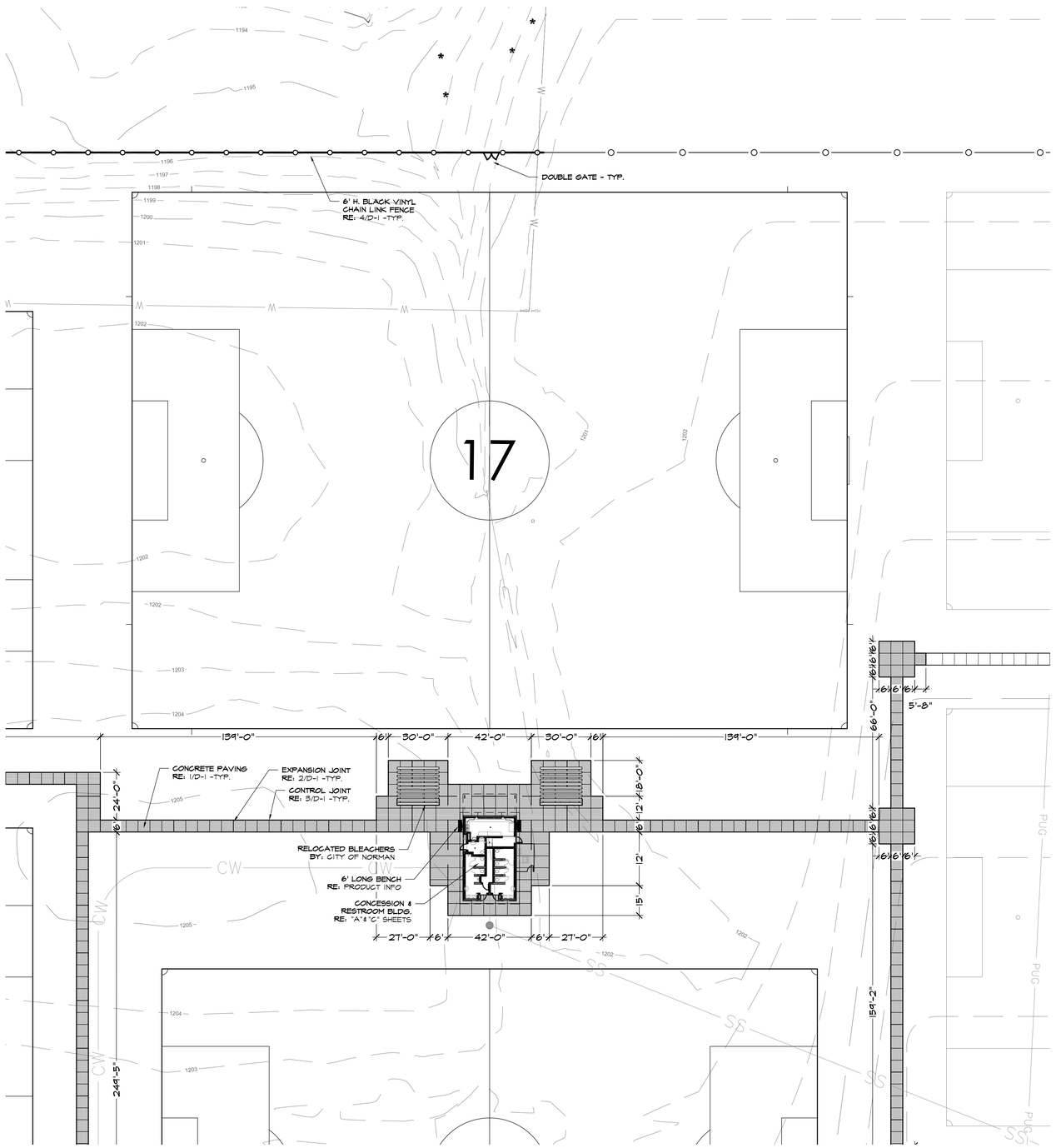

1 LAYOUT - PLAN VIEW

SCALE: 1" = 30'-0"

50 0 15 30 60

KEY MAP

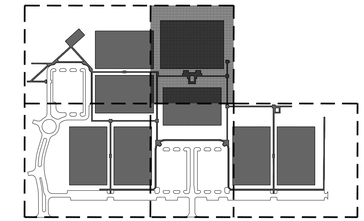

PRODUCT INFORMATION

-6' CLASSIC CASINO SURFACE MOUNT BENCH
-APPROVED PRODUCT NUMBER= B6WBCLASSCASINOSM

VISIONS INNOVATED PRODUCTS, INC. (WEBCOAT),
OR APPROVED EQUAL
PO BOX 3160 MCALLESTER, OK 74501
PH: (800) 505-5101
WEB: WWW.WEBCOAT.COM

***ALL COLORS FOR SITE FURNISHINGS TO BE SELECTED DURING THE SUBMITTAL PROCESS.**

LAYOUT NOTES

1. ALL DIMENSIONS GIVEN ARE HORIZONTAL
2. LANDSCAPE ARCHITECT TO APPROVE FINAL LAYOUT OF ALL FEATURES.
3. CONTRACTOR TO GAIN APPROVAL OF OWNER OR LANDSCAPE ARCHITECT BEFORE ANY DIGGING TAKES PLACE.
4. REFER TO PROJECT DETAILS FOR SPECIFICATIONS, MATERIALS, AND CONSTRUCTION DETAILS.
5. ASSUME ALL DIMENSIONS TO BE GIVEN AT RIGHT ANGLES UNLESS OTHERWISE NOTED ON PLAN.
6. SURVEYOR TO CALCULATE COORDINATES AND STAKE THE LAYOUT OF FEATURES FOR SUB-CONTRACTOR. DIGITAL BASE INFORMATION WILL BE PROVIDED TO CONTRACTOR OR THEIR SURVEYOR. CONTRACTOR IS RESPONSIBLE FOR VERIFICATION OF ALL LAY OUT DATA PRIOR TO LAYOUT OF PROJECT.
7. CONTRACTOR IS RESPONSIBLE FOR INSTALLATION OF ALL SLEEVES FOR UNDERGROUND UTILITIES INCLUDING, BUT NOT LIMITED TO IRRIGATION, WATER FEATURE, AND ELECTRICAL ITEMS.
8. PROVIDED COORDINATES ARE FOR REFERENCE ONLY. CONTRACTOR RESPONSIBLE FOR GATHERING THEIR OWN COORDINATE INFORMATION VIA ELECTRONIC FILES PROVIDED BY DESIGNER/CITY.

DUTY OF COOPERATION

P.D.G., LLC. dba PLANNING DESIGN GROUP IN THIS STATEMENT SHALL BE KNOWN AS 'ARCHITECT'. RELEASE OF THESE PLANS CONTEMPLATES FURTHER COOPERATION AMONG THE OWNER, HIS CONTRACTOR, AND THE ARCHITECT. DESIGN AND CONSTRUCTION ARE COMPLEX. ALTHOUGH THE ARCHITECT AND HIS CONSULTANTS HAVE PERFORMED THEIR SERVICES WITH DUE CARE AND DILIGENCE, THEY CANNOT GUARANTEE PERFECTION. COMMUNICATION IS IMPERFECT AND EVERY CONTINGENCY CANNOT BE ANTICIPATED. ANY AMBIGUITY OR DISCREPANCY DISCOVERED BY THE USE OF THESE PLANS SHALL BE REPORTED IMMEDIATELY TO THE ARCHITECT. FAILURE TO NOTIFY THE ARCHITECT COMPOUNDS MISUNDERSTANDING AND INCREASES CONSTRUCTION COSTS. A FAILURE TO COOPERATE BY SIMPLE NOTICE TO THE ARCHITECT SHALL RELIEVE THE ARCHITECT FROM RESPONSIBILITY FOR ALL CONSEQUENCES. CHANGES MADE FROM THE PLANS WITHOUT CONSENT OF THE ARCHITECT ARE UNAUTHORIZED AND SHALL RELIEVE THE ARCHITECT OF RESPONSIBILITY FOR ALL CONSEQUENCES ARRIVING OUT OF SUCH CHANGES.

COPYRIGHT NOTICE

P.D.G., LLC. dba PLANNING DESIGN GROUP RESERVE THEIR COMMONLAW COPYRIGHT AND OTHER PROPERTY RIGHTS IN THESE PLANS. THESE PLANS AND DRAWINGS ARE NOT TO BE REPRODUCED, CHANGED OR COPIED IN ANY FORM OR MANNER WHATSOEVER WITHOUT FIRST OBTAINING THE EXPRESS WRITTEN PERMISSION AND CONSENT OF P.D.G., LLC. NOR ARE THEY TO BE ASSIGNED TO ANY THIRD PARTY WITHOUT OBTAINING SAID WRITTEN PERMISSION AND CONSENT.

BASE INFORMATION

ALL BASE INFORMATION INCLUDING EXISTING DRAINAGE WAYS, EXISTING CONTOURS, EXISTING VEGETATION, EXISTING STRUCTURES AND STREETS WERE PROVIDED TO PLANNING DESIGN GROUP BASED FROM DATA COLLECTED BY JOHNSON & ASSOCIATES INC., OKLAHOMA CITY, OK

BEFORE
YOU DIG ...
1-800-522-6543
CALL OKIE

PDG
PLANNING DESIGN GROUP
LANDSCAPE ARCHITECTURE ● RECREATIONAL DESIGN ● LAND PLANNING
5314 S. YALE AVE., SUITE 710, TULSA, OK 74135
918.628.1255 918.628.1256 FAX
WWW.PLANNINGDESIGNGROUP.COM

REGISTERED LANDSCAPE ARCHITECT
JAMES C. CROSBY
1 2 1
OKLAHOMA

JAMES C. CROSBY, ASLA
LANDSCAPE ARCHITECT OF RECORD

PROJECT INFORMATION

PROJECT ADDRESS:

1001 E. ROBINSON ST.,
NORMAN, OKLAHOMA 73071

PROJECT NO.	NA
DATE	04/29/22
DRAWN BY	CHECKED BY
AB	GE

GRIFFIN SOCCER COMPLEX PHASE 6 NORMAN, OKLAHOMA

ISSUE/ REVISIONS

06/03/22	BID SET

OWNER:

THE CITY OF NORMAN PARKS & RECREATION
201-C WEST GRAY
NORMAN, OK 73069
(405) 366-5472

LP-2

LAYOUT PLAN

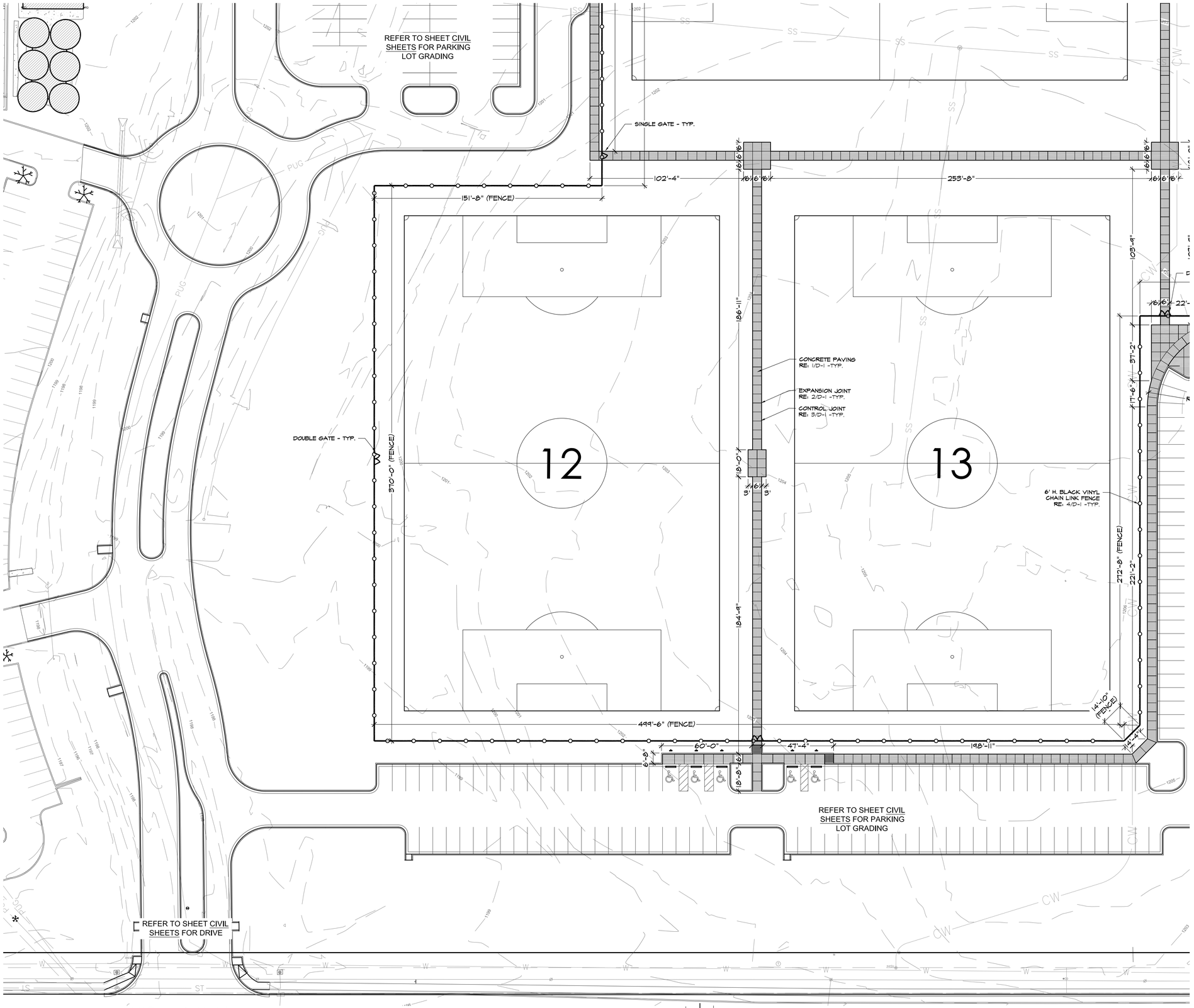

1 LAYOUT - PLAN VIEW

SCALE: 1" = 30'-0"

30 0 15 30 60

NORTH

KEY MAP

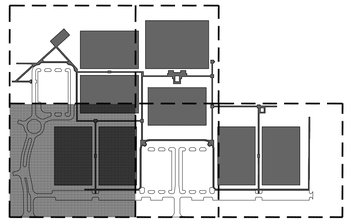

LAYOUT NOTES

1. ALL DIMENSIONS GIVEN ARE HORIZONTAL
2. LANDSCAPE ARCHITECT TO APPROVE FINAL LAYOUT OF ALL FEATURES.
3. CONTRACTOR TO GAIN APPROVAL OF OWNER OR LANDSCAPE ARCHITECT BEFORE ANY DIGGING TAKES PLACE.
4. REFER TO PROJECT DETAILS FOR SPECIFICATIONS, MATERIALS, AND CONSTRUCTION DETAILS.
5. ASSUME ALL DIMENSIONS TO BE GIVEN AT RIGHT ANGLES UNLESS OTHERWISE NOTED ON PLAN.
6. SURVEYOR TO CALCULATE COORDINATES AND STAKE THE LAYOUT OF FEATURES FOR SUB-CONTRACTOR. DIGITAL BASE INFORMATION WILL BE PROVIDED TO CONTRACTOR OR THEIR SURVEYOR. CONTRACTOR IS RESPONSIBLE FOR VERIFICATION OF ALL LAY OUT DATA PRIOR TO LAYOUT OF PROJECT.
7. CONTRACTOR IS RESPONSIBLE FOR INSTALLATION OF ALL SLEEVES FOR UNDERGROUND UTILITIES INCLUDING, BUT NOT LIMITED TO IRRIGATION, WATER FEATURE, AND ELECTRICAL ITEMS.
8. PROVIDED COORDINATES ARE FOR REFERENCE ONLY. CONTRACTOR RESPONSIBLE FOR GATHERING THEIR OWN COORDINATE INFORMATION VIA ELECTRONIC FILES PROVIDED BY DESIGNER/CITY.

DUTY OF COOPERATION

P.D.G., LLC. dba PLANNING DESIGN GROUP IN THIS STATEMENT SHALL BE KNOWN AS 'ARCHITECT'. RELEASE OF THESE PLANS CONTEMPLATES FURTHER COOPERATION AMONG THE OWNER, HIS CONTRACTOR, AND THE ARCHITECT. DESIGN AND CONSTRUCTION ARE COMPLEX. ALTHOUGH THE ARCHITECT AND HIS CONSULTANTS HAVE PERFORMED THEIR SERVICES WITH DUE CARE AND DILIGENCE, THEY CANNOT GUARANTEE PERFECTION. COMMUNICATION IS IMPERFECT AND EVERY CONTINGENCY CANNOT BE ANTICIPATED. ANY AMBIGUITY OR DISCREPANCY DISCOVERED BY THE USE OF THESE PLANS SHALL BE REPORTED IMMEDIATELY TO THE ARCHITECT. FAILURE TO NOTIFY THE ARCHITECT COMPOUNDS MISUNDERSTANDING AND INCREASES CONSTRUCTION COSTS. A FAILURE TO COOPERATE BY SIMPLE NOTICE TO THE ARCHITECT SHALL RELIEVE THE ARCHITECT FROM RESPONSIBILITY FOR ALL CONSEQUENCES. CHANGES MADE FROM THE PLANS WITHOUT CONSENT OF THE ARCHITECT ARE UNAUTHORIZED, AND SHALL RELIEVE THE ARCHITECT OF RESPONSIBILITY FOR ALL CONSEQUENCES ARRIVING OUT OF SUCH CHANGES.

COPYRIGHT NOTICE

P.D.G., LLC. dba PLANNING DESIGN GROUP RESERVE THEIR COMMONLAW COPYRIGHT AND OTHER PROPERTY RIGHTS IN THESE PLANS. THESE PLANS AND DRAWINGS ARE NOT TO BE REPRODUCED, CHANGED OR COPIED IN ANY FORM OR MANNER WHATSOEVER WITHOUT FIRST OBTAINING THE EXPRESS WRITTEN PERMISSION AND CONSENT OF P.D.G., LLC. NOR ARE THEY TO BE ASSIGNED TO ANY THIRD PARTY WITHOUT OBTAINING SAID WRITTEN PERMISSION AND CONSENT.

BASE INFORMATION

ALL BASE INFORMATION INCLUDING EXISTING DRAINAGE WAYS, EXISTING CONTOURS, EXISTING VEGETATION, EXISTING STRUCTURES AND STREETS WERE PROVIDED TO PLANNING DESIGN GROUP BASED FROM DATA COLLECTED BY JOHNSON & ASSOCIATES INC., OKLAHOMA CITY, OK

BEFORE YOU DIG ...
1-800-522-6543
CALL OKIE

PDG
PLANNING DESIGN GROUP
LANDSCAPE ARCHITECTURE ♦ RECREATIONAL DESIGN ♦ LAND PLANNING
5314 S. YALE AVE., SUITE 710, TULSA, OK 74135
918.628.1255 918.628.1256 FAX
WWW.PLANNINGDESIGNGROUP.COM

REGISTERED LANDSCAPE ARCHITECT
JAMES C. CROSBY
121
OKLAHOMA

JAMES C. CROSBY, ASLA
LANDSCAPE ARCHITECT OF RECORD

PROJECT INFORMATION

PROJECT ADDRESS:

1001 E. ROBINSON ST.,
NORMAN, OKLAHOMA 73071

PROJECT NO.	NA
DATE	04/29/22
DRAWN BY	CHECKED BY
AB	GE

GRIFFIN SOCCER COMPLEX
PHASE 6
NORMAN, OKLAHOMA

ISSUE/ REVISIONS

06/03/22	BID SET

OWNER:

THE CITY OF NORMAN PARKS & RECREATION
201-C WEST GRAY
NORMAN, OK 73069
(405) 366-5472

LP-3

LAYOUT PLAN

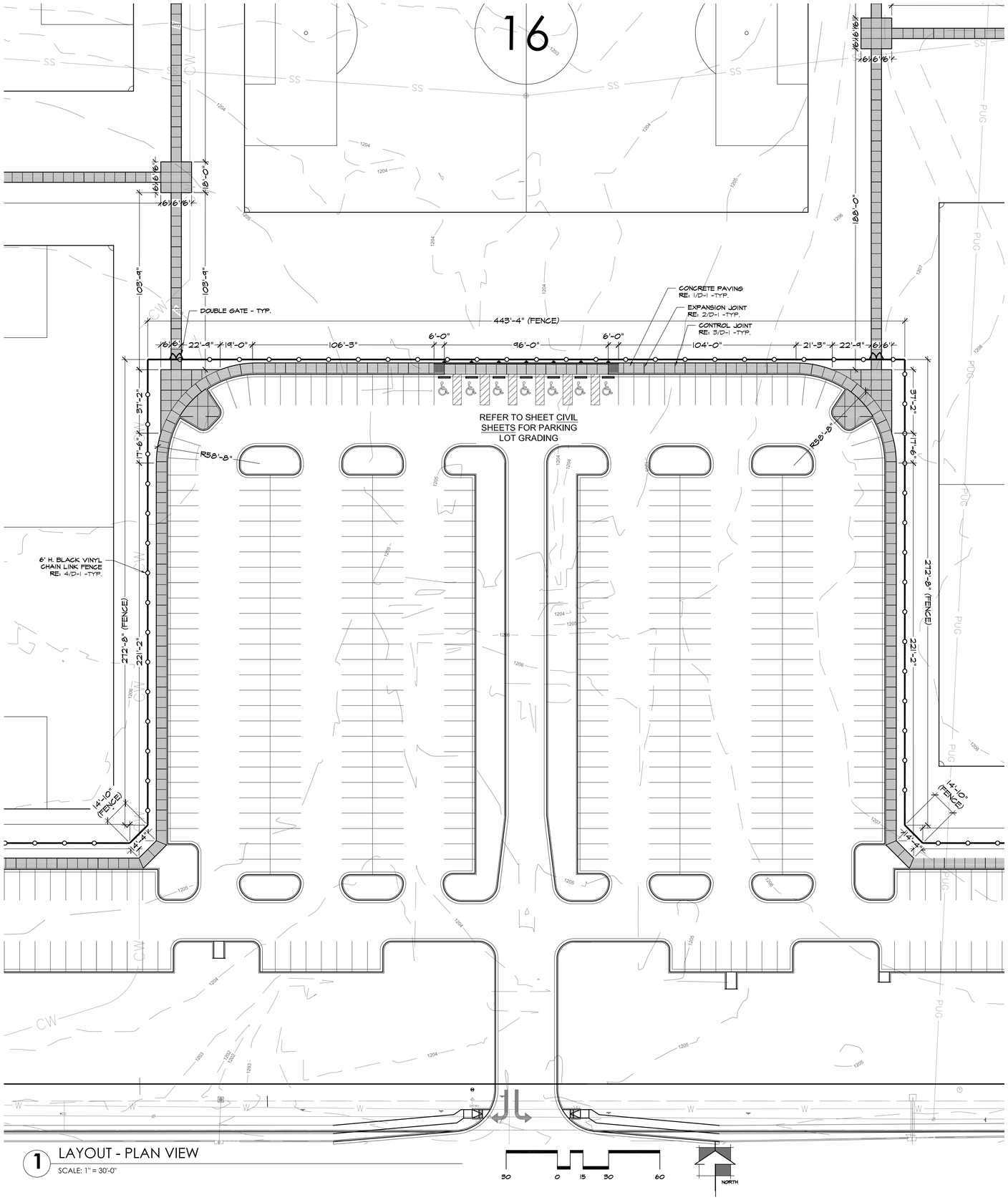

1 LAYOUT - PLAN VIEW

SCALE: 1" = 30'-0"

KEY MAP

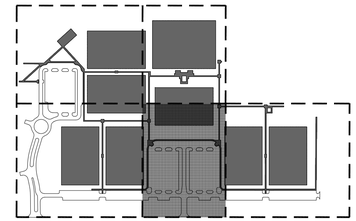

LAYOUT NOTES

1. ALL DIMENSIONS GIVEN ARE HORIZONTAL
2. LANDSCAPE ARCHITECT TO APPROVE FINAL LAYOUT OF ALL FEATURES.
3. CONTRACTOR TO GAIN APPROVAL OF OWNER OR LANDSCAPE ARCHITECT BEFORE ANY DIGGING TAKES PLACE.
4. REFER TO PROJECT DETAILS FOR SPECIFICATIONS, MATERIALS, AND CONSTRUCTION DETAILS.
5. ASSUME ALL DIMENSIONS TO BE GIVEN AT RIGHT ANGLES UNLESS OTHERWISE NOTED ON PLAN.
6. SURVEYOR TO CALCULATE COORDINATES AND STAKE THE LAYOUT OF FEATURES FOR SUB-CONTRACTOR. DIGITAL BASE INFORMATION WILL BE PROVIDED TO CONTRACTOR OR THEIR SURVEYOR. CONTRACTOR IS RESPONSIBLE FOR VERIFICATION OF ALL LAY OUT DATA PRIOR TO LAYOUT OF PROJECT.
7. CONTRACTOR IS RESPONSIBLE FOR INSTALLATION OF ALL SLEEVES FOR UNDERGROUND UTILITIES INCLUDING, BUT NOT LIMITED TO IRRIGATION, WATER FEATURE, AND ELECTRICAL ITEMS.
8. PROVIDED COORDINATES ARE FOR REFERENCE ONLY. CONTRACTOR RESPONSIBLE FOR GATHERING THEIR OWN COORDINATE INFORMATION VIA ELECTRONIC FILES PROVIDED BY DESIGNER/CITY.

DUTY OF COOPERATION

P.D.G., LLC. dba PLANNING DESIGN GROUP IN THIS STATEMENT SHALL BE KNOWN AS 'ARCHITECT'. RELEASE OF THESE PLANS CONTEMPLATES FURTHER COOPERATION AMONG THE OWNER, HIS CONTRACTOR, AND THE ARCHITECT. DESIGN AND CONSTRUCTION ARE COMPLEX. ALTHOUGH THE ARCHITECT AND HIS CONSULTANTS HAVE PERFORMED THEIR SERVICES WITH DUE CARE AND DILIGENCE, THEY CANNOT GUARANTEE PERFECTION. COMMUNICATION IS IMPERFECT AND EVERY CONTINGENCY CANNOT BE ANTICIPATED. ANY AMBIGUITY OR DISCREPANCY DISCOVERED BY THE USE OF THESE PLANS SHALL BE REPORTED IMMEDIATELY TO THE ARCHITECT. FAILURE TO NOTIFY THE ARCHITECT COMPOUNDS MISUNDERSTANDING AND INCREASES CONSTRUCTION COSTS. A FAILURE TO COOPERATE BY SIMPLE NOTICE TO THE ARCHITECT SHALL RELIEVE THE ARCHITECT FROM RESPONSIBILITY FOR ALL CONSEQUENCES. CHANGES MADE FROM THE PLANS WITHOUT CONSENT OF THE ARCHITECT ARE UNAUTHORIZED, AND SHALL RELIEVE THE ARCHITECT OF RESPONSIBILITY FOR ALL CONSEQUENCES ARRIVING OUT OF SUCH CHANGES.

COPYRIGHT NOTICE

P.D.G., LLC. dba PLANNING DESIGN GROUP RESERVE THEIR COMMONLAW COPYRIGHT AND OTHER PROPERTY RIGHTS IN THESE PLANS. THESE PLANS AND DRAWINGS ARE NOT TO BE REPRODUCED, CHANGED OR COPIED IN ANY FORM OR MANNER WHATSOEVER WITHOUT FIRST OBTAINING THE EXPRESS WRITTEN PERMISSION AND CONSENT OF P.D.G., LLC. NOR ARE THEY TO BE ASSIGNED TO ANY THIRD PARTY WITHOUT OBTAINING SAID WRITTEN PERMISSION AND CONSENT.

BASE INFORMATION

ALL BASE INFORMATION INCLUDING EXISTING DRAINAGE WAYS, EXISTING CONTOURS, EXISTING VEGETATION, EXISTING STRUCTURES AND STREETS WERE PROVIDED TO PLANNING DESIGN GROUP BASED FROM DATA COLLECTED BY JOHNSON & ASSOCIATES INC., OKLAHOMA CITY, OK

BEFORE
YOU DIG ...
1-800-522-6543
CALL OKIE

PDG
PLANNING DESIGN GROUP
LANDSCAPE ARCHITECTURE ♦
RECREATIONAL DESIGN ♦ LAND PLANNING
5314 S. YALE AVE., SUITE 710, TULSA, OK 74135
918.628.1255 918.628.1256 FAX
WWW.PLANNINGDESIGNGROUP.COM

REGISTERED LANDSCAPE ARCHITECT
JAMES C. CROSBY
121
OKLAHOMA
6-30-22

JAMES C. CROSBY, ASLA
LANDSCAPE ARCHITECT OF RECORD

PROJECT INFORMATION

PROJECT ADDRESS:

1001 E. ROBINSON ST.,
NORMAN, OKLAHOMA 73071

PROJECT NO.	NA
DATE	04/29/22
DRAWN BY	CHECKED BY
AB	GE

GRIFFIN SOCCER COMPLEX PHASE 6 NORMAN, OKLAHOMA

ISSUE/ REVISIONS

06/03/22	BID SET

OWNER:

THE CITY OF NORMAN PARKS & RECREATION
201-C WEST GRAY
NORMAN, OK 73069
(405) 366-5472

LP-4

LAYOUT PLAN

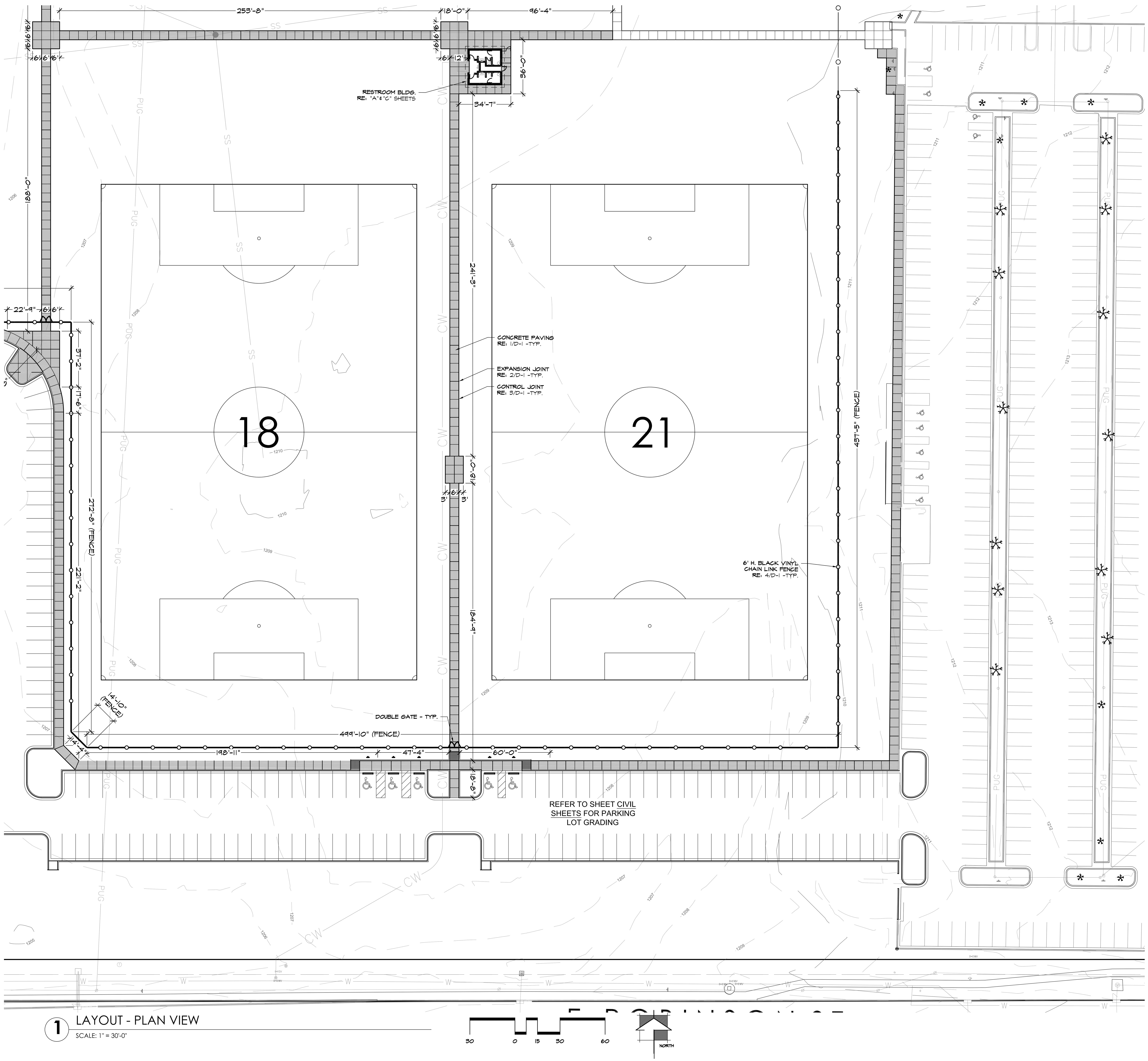

1 LAYOUT - PLAN VIEW
SCALE: 1" = 30'-0"

KEY MAP

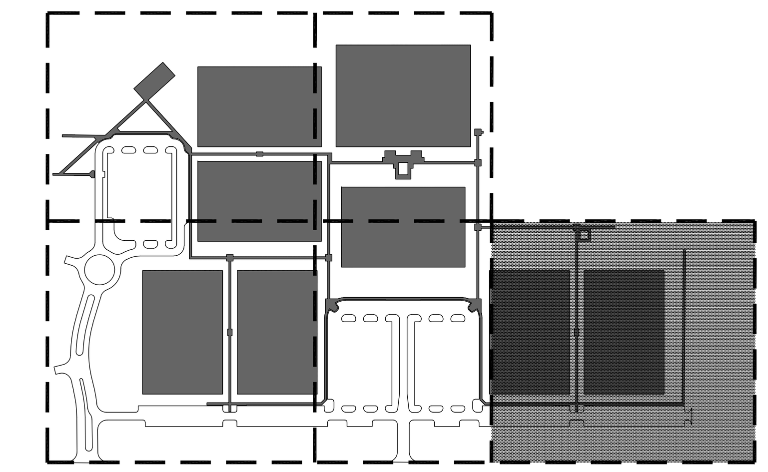

LAYOUT NOTES

1. ALL DIMENSIONS GIVEN ARE HORIZONTAL
2. LANDSCAPE ARCHITECT TO APPROVE FINAL LAYOUT OF ALL FEATURES.
3. CONTRACTOR TO GAIN APPROVAL OF OWNER OR LANDSCAPE ARCHITECT BEFORE ANY DIGGING TAKES PLACE.
4. REFER TO PROJECT DETAILS FOR SPECIFICATIONS, MATERIALS, AND CONSTRUCTION DETAILS.
5. ASSUME ALL DIMENSIONS TO BE GIVEN AT RIGHT ANGLES UNLESS OTHERWISE NOTED ON PLAN.
6. SURVEYOR TO CALCULATE COORDINATES AND STAKE THE LAYOUT OF FEATURES FOR SUB-CONTRACTOR. DIGITAL BASE INFORMATION WILL BE PROVIDED TO CONTRACTOR OR THEIR SURVEYOR. CONTRACTOR IS RESPONSIBLE FOR VERIFICATION OF ALL LAY OUT DATA PRIOR TO LAYOUT OF PROJECT.
7. CONTRACTOR IS RESPONSIBLE FOR INSTALLATION OF ALL SLEEVES FOR UNDERGROUND UTILITIES INCLUDING, BUT NOT LIMITED TO IRRIGATION, WATER FEATURE, AND ELECTRICAL ITEMS.
8. PROVIDED COORDINATES ARE FOR REFERENCE ONLY. CONTRACTOR RESPONSIBLE FOR GATHERING THEIR OWN COORDINATE INFORMATION VIA ELECTRONIC FILES PROVIDED BY DESIGNER/CITY.

DUTY OF COOPERATION

P.D.G., LLC. dba PLANNING DESIGN GROUP IN THIS STATEMENT SHALL BE KNOWN AS 'ARCHITECT'. RELEASE OF THESE PLANS CONTEMPLATES FURTHER COOPERATION AMONG THE OWNER, HIS CONTRACTOR, AND THE ARCHITECT. DESIGN AND CONSTRUCTION ARE COMPLEX. ALTHOUGH THE ARCHITECT AND HIS CONSULTANTS HAVE PERFORMED THEIR SERVICES WITH DUE CARE AND DILIGENCE, THEY CANNOT GUARANTEE PERFECTION. COMMUNICATION IS IMPERFECT AND EVERY CONTINGENCY CANNOT BE ANTICIPATED. ANY AMBIGUITY OR DISCREPANCY DISCOVERED BY THE USE OF THESE PLANS SHALL BE REPORTED IMMEDIATELY TO THE ARCHITECT. FAILURE TO NOTIFY THE ARCHITECT COMPOUNDS MISUNDERSTANDING AND INCREASES CONSTRUCTION COSTS. A FAILURE TO COOPERATE BY SIMPLE NOTICE TO THE ARCHITECT SHALL RELIEVE THE ARCHITECT FROM RESPONSIBILITY FOR ALL CONSEQUENCES. CHANGES MADE FROM THE PLANS WITHOUT CONSENT OF THE ARCHITECT ARE UNAUTHORIZED, AND SHALL RELIEVE THE ARCHITECT OF RESPONSIBILITY FOR ALL CONSEQUENCES ARRIVING OUT OF SUCH CHANGES.

COPYRIGHT NOTICE

P.D.G., LLC. dba PLANNING DESIGN GROUP RESERVE THEIR COMMONLAW COPYRIGHT AND OTHER PROPERTY RIGHTS IN THESE PLANS. THESE PLANS AND DRAWINGS ARE NOT TO BE REPRODUCED, CHANGED OR COPIED IN ANY FORM OR MANNER WHATSOEVER WITHOUT FIRST OBTAINING THE EXPRESS WRITTEN PERMISSION AND CONSENT OF P.D.G., LLC. NOR ARE THEY TO BE ASSIGNED TO ANY THIRD PARTY WITHOUT OBTAINING SAID WRITTEN PERMISSION AND CONSENT.

BASE INFORMATION

ALL BASE INFORMATION INCLUDING EXISTING DRAINAGE WAYS, EXISTING CONTOURS, EXISTING VEGETATION, EXISTING STRUCTURES AND STREETS WERE PROVIDED TO PLANNING DESIGN GROUP BASED FROM DATA COLLECTED BY JOHNSON & ASSOCIATES INC.; OKLAHOMA CITY, OK

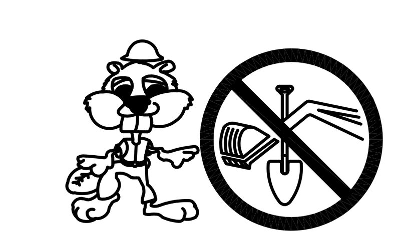

BEFORE
YOU DIG ...
1-800-522-6543
CALL OKIE

PDG
PLANNING DESIGN GROUP
LANDSCAPE ARCHITECTURE ● RECREATIONAL DESIGN ● LAND PLANNING
5314 S. YALE AVE., SUITE 710, TULSA, OK 74135
918.628.1255 918.628.1256 FAX
WWW.PLANNINGDESIGNGROUP.COM

REGISTERED LANDSCAPE ARCHITECT — JAMES C. CROSBY 121 — OKLAHOMA
JAMES C. CROSBY, ASLA
LANDSCAPE ARCHITECT OF RECORD

PROJECT INFORMATION	
PROJECT ADDRESS:	
1001 E. ROBINSON ST., NORMAN, OKLAHOMA 73071	
PROJECT NO.	NA
DATE	04/29/22
DRAWN BY	CHECKED BY
AB	GE

GRIFFIN SOCCER COMPLEX
PHASE 6
NORMAN, OKLAHOMA

ISSUE/ REVISIONS	
06/03/22	BID SET

OWNER:
THE CITY OF NORMAN PARKS & RECREATION
201-C WEST GRAY
NORMAN, OK 73069
(405) 366-5472

LP-5
LAYOUT PLAN

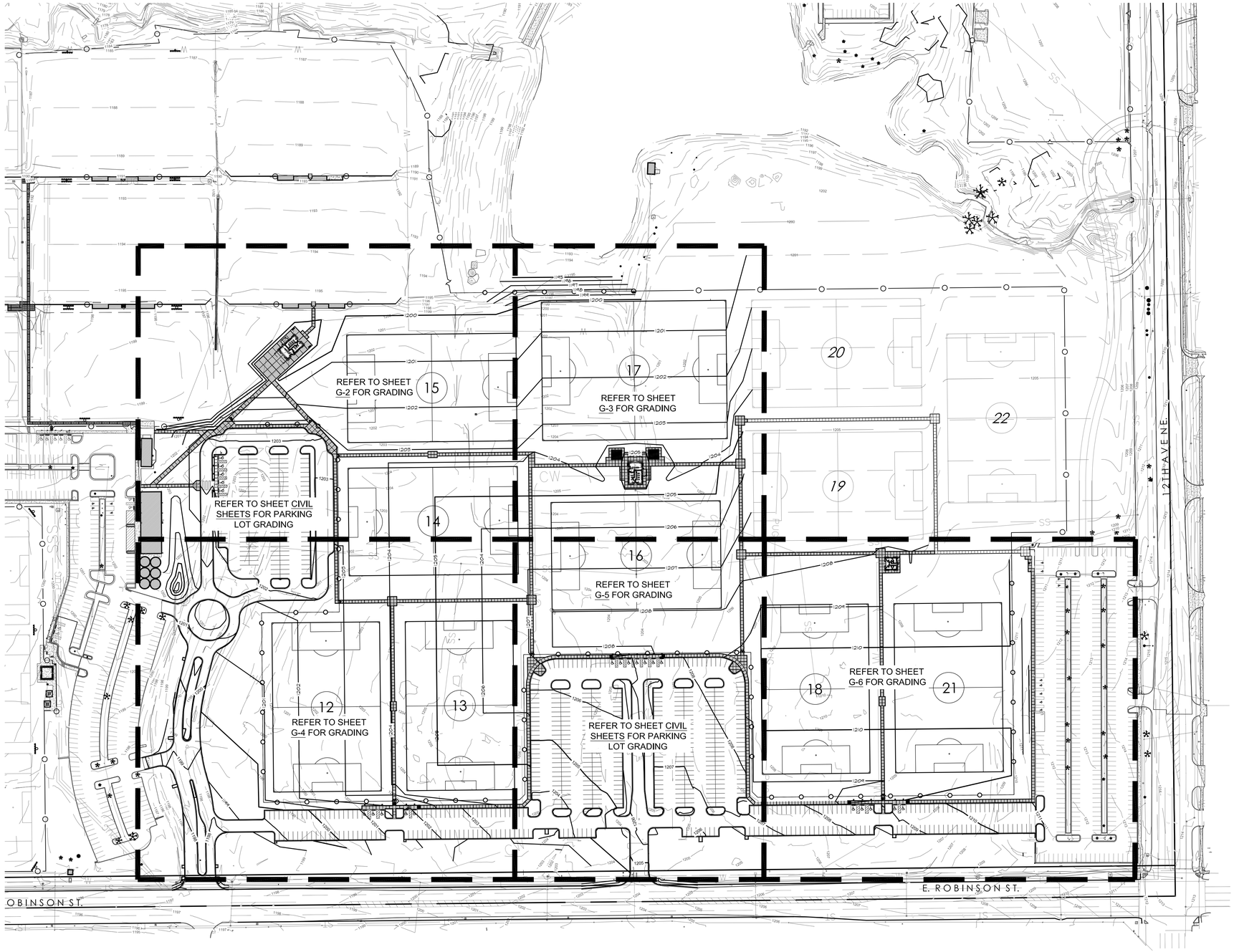

1 OVERALL SITE - PLAN VIEW

SCALE: 1" = 100'-0"

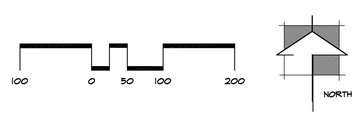

GRADING NOTES

1. CONTRACTOR TO BLEND CONTOUR ALTERATIONS INTO EXISTING TOPOGRAPHY TO PROMOTE A SMOOTH TRANSITION.
2. CONTRACTOR TO MAINTAIN AND UTILIZE NATURAL DRAINAGE PATTERNS WHERE POSSIBLE.
3. ALL SPOT ELEVATIONS HAVE BEEN TRUNCATED TO EXCLUDE THE "12" (THOUSAND/HUNDREDS) FROM THE LABEL.
4. ALL IMPERVIOUS WALKING SURFACES SHALL NOT EXCEED 2% CROSS SLOPE AND 5% SLOPE IN WALKING DIRECTION. ALL PLAZA AREAS TO MAINTAIN A MAXIMUM OF 2% SLOPE IN ANY DIRECTION. ALL GRADES MUST MEET CURRENT CITY OF NORMAN ACCESSIBILITY CODES AND REQUIREMENTS.
5. IF ERRORS ARE DISCOVERED IN REGARDS TO PROPOSED SPOT ELEVATIONS OR CONTOURS ON THE PLAN, THE CONTRACTOR IS TO CONSULT WITH LANDSCAPE ARCHITECT PRIOR TO CONTINUING CONSTRUCTION OPERATIONS.
6. CONTRACTOR IS RESPONSIBLE FOR ENSURING THAT ALL SIDEWALKS AND ACCESS RAMPS COMPLY WITH THE CITY OF NORMAN ACCESSIBILITY STANDARD REQUIREMENTS. CONTRACTOR SHALL NOTIFY THE LANDSCAPE ARCHITECT OF ANY DISCREPANCIES BETWEEN DESIGN INFORMATION AND THE CITY OF SALLISAW STANDARD REQUIREMENTS PRIOR TO CONSTRUCTION.
7. MAXIMUM SIDEWALK CROSS SLOPE IS 2%.
8. CONTRACTOR TO SMOOTH OUT HOLES AND MOUNDS IN DEMO AREA THAT WILL NOT BE GRADED IN THIS PHASE TO PREVENT INJURY OR ACCIDENTS

EROSION CONTROL NOTES

1. CONTRACTOR IS RESPONSIBLE FOR THE INSTALLATION OF ALL EROSION CONTROL MATERIAL THAT IS NECESSARY TO MEET CITY OF NORMAN CODES.
2. REFER TO SHEET D-2 FOR ALL EROSION CONTROL DETAILS.

NOTE:
CONTRACTOR IS RESPONSIBLE FOR CONTACTING NECESSARY UTILITY COMPANIES AND THE CITY OF NORMAN FOR LOCATING ALL UNDERGROUND UTILITY LINES INCLUDING SERVICE LINES AND IRRIGATION LINES.

GRADING LEGEND

TC - TOP OF CURB
BC - BOTTOM OF CURB
TG - TOP OF GRATE
FF - FINISHED FLOOR
FG - FINISH GRADE
TW - TOP OF WALL
TF - TOP OF FOOTING
FL - FLOW LINE
TL - TOP OF LANDING

DUTY OF COOPERATION

P.D.G., LLC. dba PLANNING DESIGN GROUP IN THIS STATEMENT SHALL BE KNOWN AS 'ARCHITECT'. RELEASE OF THESE PLANS CONTEMPLATES FURTHER COOPERATION AMONG THE OWNER, HIS CONTRACTOR, AND THE ARCHITECT. DESIGN AND CONSTRUCTION ARE COMPLEX. ALTHOUGH THE ARCHITECT AND HIS CONSULTANTS HAVE PERFORMED THEIR SERVICES WITH DUE CARE AND DILIGENCE, THEY CANNOT GUARANTEE PERFECTION. COMMUNICATION IS IMPERFECT AND EVERY CONTINGENCY CANNOT BE ANTICIPATED. ANY AMBIGUITY OR DISCREPANCY DISCOVERED BY THE USE OF THESE PLANS SHALL BE REPORTED IMMEDIATELY TO THE ARCHITECT. FAILURE TO NOTIFY THE ARCHITECT COMPOUNDS MISUNDERSTANDING AND INCREASES CONSTRUCTION COSTS. A FAILURE TO COOPERATE BY SIMPLE NOTICE TO THE ARCHITECT SHALL RELIEVE THE ARCHITECT FROM RESPONSIBILITY FOR ALL CONSEQUENCES. CHANGES MADE FROM THE PLANS WITHOUT CONSENT OF THE ARCHITECT ARE UNAUTHORIZED, AND SHALL RELIEVE THE ARCHITECT OF RESPONSIBILITY FOR ALL CONSEQUENCES ARRIVING OUT OF SUCH CHANGES.

COPYRIGHT NOTICE

P.D.G., LLC. dba PLANNING DESIGN GROUP RESERVE THEIR COMMONLAW COPYRIGHT AND OTHER PROPERTY RIGHTS IN THESE PLANS. THESE PLANS AND DRAWINGS ARE NOT TO BE REPRODUCED, CHANGED OR COPIED IN ANY FORM OR MANNER WHATSOEVER WITHOUT FIRST OBTAINING THE EXPRESS WRITTEN PERMISSION AND CONSENT OF P.D.G., LLC. NOR ARE THEY TO BE ASSIGNED TO ANY THIRD PARTY WITHOUT OBTAINING SAID WRITTEN PERMISSION AND CONSENT.

BASE INFORMATION

ALL BASE INFORMATION INCLUDING EXISTING DRAINAGE WAYS, EXISTING CONTOURS, EXISTING VEGETATION, EXISTING STRUCTURES AND STREETS WERE PROVIDED TO PLANNING DESIGN GROUP BASED FROM DATA COLLECTED BY JOHNSON & ASSOCIATES INC., OKLAHOMA CITY, OK

BEFORE YOU DIG ...
1-800-522-6543
CALL OKIE

PDG
PLANNING DESIGN GROUP
LANDSCAPE ARCHITECTURE ★ RECREATIONAL DESIGN ★ LAND PLANNING
5314 S. YALE AVE., SUITE 710, TULSA, OK 74135
918.628.1255 918.628.1256 FAX
WWW.PLANNINGDESIGNGROUP.COM

REGISTERED LANDSCAPE ARCHITECT
JAMES C. CROSBY
121
OKLAHOMA
5-22

JAMES C. CROSBY, ASLA
LANDSCAPE ARCHITECT OF RECORD

PROJECT INFORMATION	
PROJECT ADDRESS:	
1001 E. ROBINSON ST., NORMAN, OKLAHOMA 73071	
PROJECT NO.	NA
DATE	04/29/22
DRAWN BY	CHECKED BY
AB	GE

GRIFFIN SOCCER COMPLEX PHASE 6 NORMAN, OKLAHOMA

ISSUE/ REVISIONS	
06/03/22	BID SET

OWNER:

THE CITY OF NORMAN PARKS & RECREATION
201-C WEST GRAY
NORMAN, OK 73069
(405) 366-5472

G-1

OVERALL GRADING PLAN

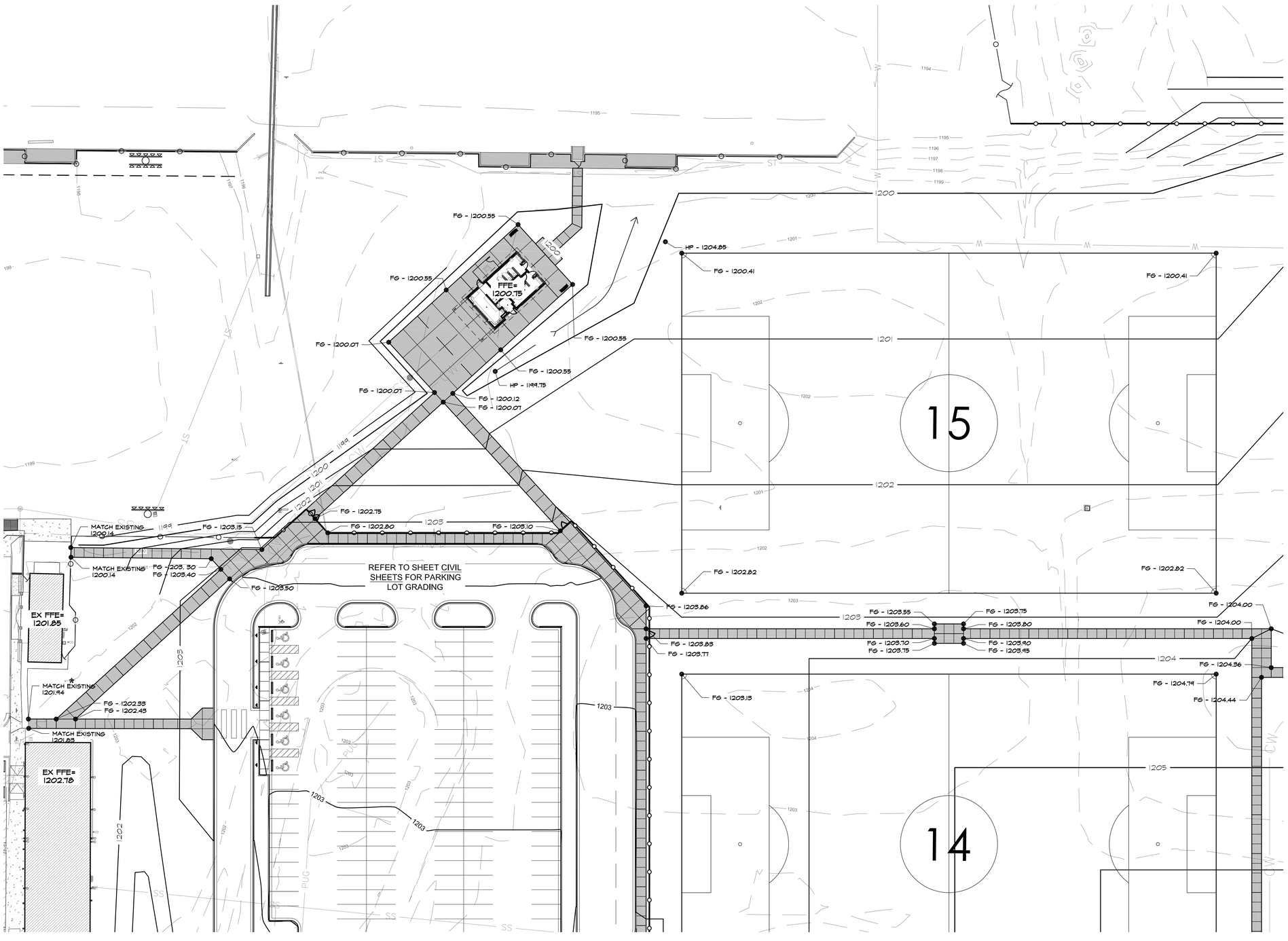

1 LAYOUT - PLAN VIEW

SCALE: 1" = 30'-0"

30 0 15 30 60

NORTH

KEY MAP

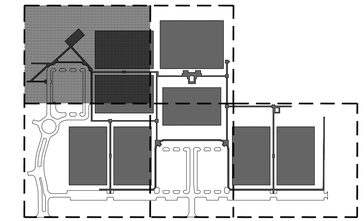

GRADING NOTES

1. CONTRACTOR TO BLEND CONTOUR ALTERATIONS INTO EXISTING TOPOGRAPHY TO PROMOTE A SMOOTH TRANSITION.
2. CONTRACTOR TO MAINTAIN AND UTILIZE NATURAL DRAINAGE PATTERNS WHERE POSSIBLE.
3. ALL SPOT ELEVATIONS HAVE BEEN TRUNCATED TO EXCLUDE THE "12" (THOUSAND/HUNDREDS) FROM THE LABEL.
4. ALL IMPERVIOUS WALKING SURFACES SHALL NOT EXCEED 2% CROSS SLOPE AND 5% SLOPE IN WALKING DIRECTION. ALL PLAZA AREAS TO MAINTAIN A MAXIMUM OF 2% SLOPE IN ANY DIRECTION. ALL GRADES MUST MEET CURRENT CITY OF NORMAN ACCESSIBILITY CODES AND REQUIREMENTS.
5. IF ERRORS ARE DISCOVERED IN REGARDS TO PROPOSED SPOT ELEVATIONS OR CONTOURS ON THE PLAN, THE CONTRACTOR IS TO CONSULT WITH LANDSCAPE ARCHITECT PRIOR TO CONTINUING CONSTRUCTION OPERATIONS.
6. CONTRACTOR IS RESPONSIBLE FOR ENSURING THAT ALL SIDEWALKS AND ACCESS RAMPS COMPLY WITH THE CITY OF NORMAN ACCESSIBILITY STANDARD REQUIREMENTS. CONTRACTOR SHALL NOTIFY THE LANDSCAPE ARCHITECT OF ANY DISCREPANCIES BETWEEN DESIGN INFORMATION AND THE CITY OF SALLISAW STANDARD REQUIREMENTS PRIOR TO CONSTRUCTION.
7. MAXIMUM SIDEWALK CROSS SLOPE IS 2%.
8. CONTRACTOR TO SMOOTH OUT HOLES AND MOUNDS IN DEMO AREA THAT WILL NOT BE GRADED IN THIS PHASE TO PREVENT INJURY OR ACCIDENTS

EROSION CONTROL NOTES

1. CONTRACTOR IS RESPONSIBLE FOR THE INSTALLATION OF ALL EROSION CONTROL MATERIAL THAT IS NECESSARY TO MEET CITY OF NORMAN CODES.
2. REFER TO SHEET D-2 FOR ALL EROSION CONTROL DETAILS.

NOTE:
CONTRACTOR IS RESPONSIBLE FOR CONTACTING NECESSARY UTILITY COMPANIES AND THE CITY OF NORMAN FOR LOCATING ALL UNDERGROUND UTILITY LINES INCLUDING SERVICE LINES AND IRRIGATION LINES.

GRADING LEGEND

TC - TOP OF CURB
BC - BOTTOM OF CURB
TG - TOP OF GRATE
FF - FINISHED FLOOR
FG - FINISH GRADE
TW - TOP OF WALL
TF - TOP OF FOOTING
FL - FLOW LINE
TL - TOP OF LANDING

DUTY OF COOPERATION

P.D.G., L.L.C. dba PLANNING DESIGN GROUP IN THIS STATEMENT SHALL BE KNOWN AS 'ARCHITECT'. RELEASE OF THESE PLANS CONTEMPLATES FURTHER COOPERATION AMONG THE OWNER, HIS CONTRACTOR, AND THE ARCHITECT. DESIGN AND CONSTRUCTION ARE COMPLEX. ALTHOUGH THE ARCHITECT AND HIS CONSULTANTS HAVE PERFORMED THEIR SERVICES WITH DUE CARE AND DILIGENCE, THEY CANNOT GUARANTEE PERFECTION. COMMUNICATION IS IMPERFECT AND EVERY CONTINGENCY CANNOT BE ANTICIPATED. ANY AMBIGUITY OR DISCREPANCY DISCOVERED BY THE USE OF THESE PLANS SHALL BE REPORTED IMMEDIATELY TO THE ARCHITECT. FAILURE TO NOTIFY THE ARCHITECT COMPOUNDS MISUNDERSTANDING AND INCREASES CONSTRUCTION COSTS. A FAILURE TO COOPERATE BY SIMPLE NOTICE TO THE ARCHITECT SHALL RELIEVE THE ARCHITECT FROM RESPONSIBILITY FOR ALL CONSEQUENCES. CHANGES MADE FROM THE PLANS WITHOUT CONSENT OF THE ARCHITECT ARE UNAUTHORIZED AND SHALL RELIEVE THE ARCHITECT OF RESPONSIBILITY FOR ALL CONSEQUENCES ARRIVING OUT OF SUCH CHANGES.

COPYRIGHT NOTICE

P.D.G., L.L.C. dba PLANNING DESIGN GROUP RESERVE THEIR COMMONLAW COPYRIGHT AND OTHER PROPERTY RIGHTS IN THESE PLANS. THESE PLANS AND DRAWINGS ARE NOT TO BE REPRODUCED, CHANGED OR COPIED IN ANY FORM OR MANNER WHATSOEVER WITHOUT FIRST OBTAINING THE EXPRESS WRITTEN PERMISSION AND CONSENT OF P.D.G., LLC. NOR ARE THEY TO BE ASSIGNED TO ANY THIRD PARTY WITHOUT OBTAINING SAID WRITTEN PERMISSION AND CONSENT.

BASE INFORMATION

ALL BASE INFORMATION INCLUDING EXISTING DRAINAGE WAYS, EXISTING CONTOURS, EXISTING VEGETATION, EXISTING STRUCTURES AND STREETS HERE PROVIDED TO PLANNING DESIGN GROUP BASED FROM DATA COLLECTED BY JOHNSON & ASSOCIATES INC., OKLAHOMA CITY, OK

BEFORE YOU DIG ...
1-800-522-6543
CALL OKIE

PDG
PLANNING DESIGN GROUP
LANDSCAPE ARCHITECTURE ♦ RECREATIONAL DESIGN ♦ LAND PLANNING
5314 S. YALE AVE., SUITE 710, TULSA, OK 74135
918.628.1255 918.628.1256 FAX
WWW.PLANNINGDESIGNGROUP.COM

REGISTERED LANDSCAPE ARCHITECT
JAMES C. CROSBY
1 2 1
OKLAHOMA
5-2-22

JAMES C. CROSBY, ASLA
LANDSCAPE ARCHITECT OF RECORD

PROJECT INFORMATION

PROJECT ADDRESS:

1001 E. ROBINSON ST.,
NORMAN, OKLAHOMA 73071

PROJECT NO.	NA
DATE	04/29/22
DRAWN BY	CHECKED BY
AB	GE

GRIFFIN SOCCER COMPLEX
PHASE 6
NORMAN, OKLAHOMA

ISSUE/ REVISIONS

06/03/22	BID SET

OWNER:

THE CITY OF NORMAN PARKS & RECREATION
201-C WEST GRAY
NORMAN, OK 73069
(405) 366-5472

G-2

LAYOUT PLAN

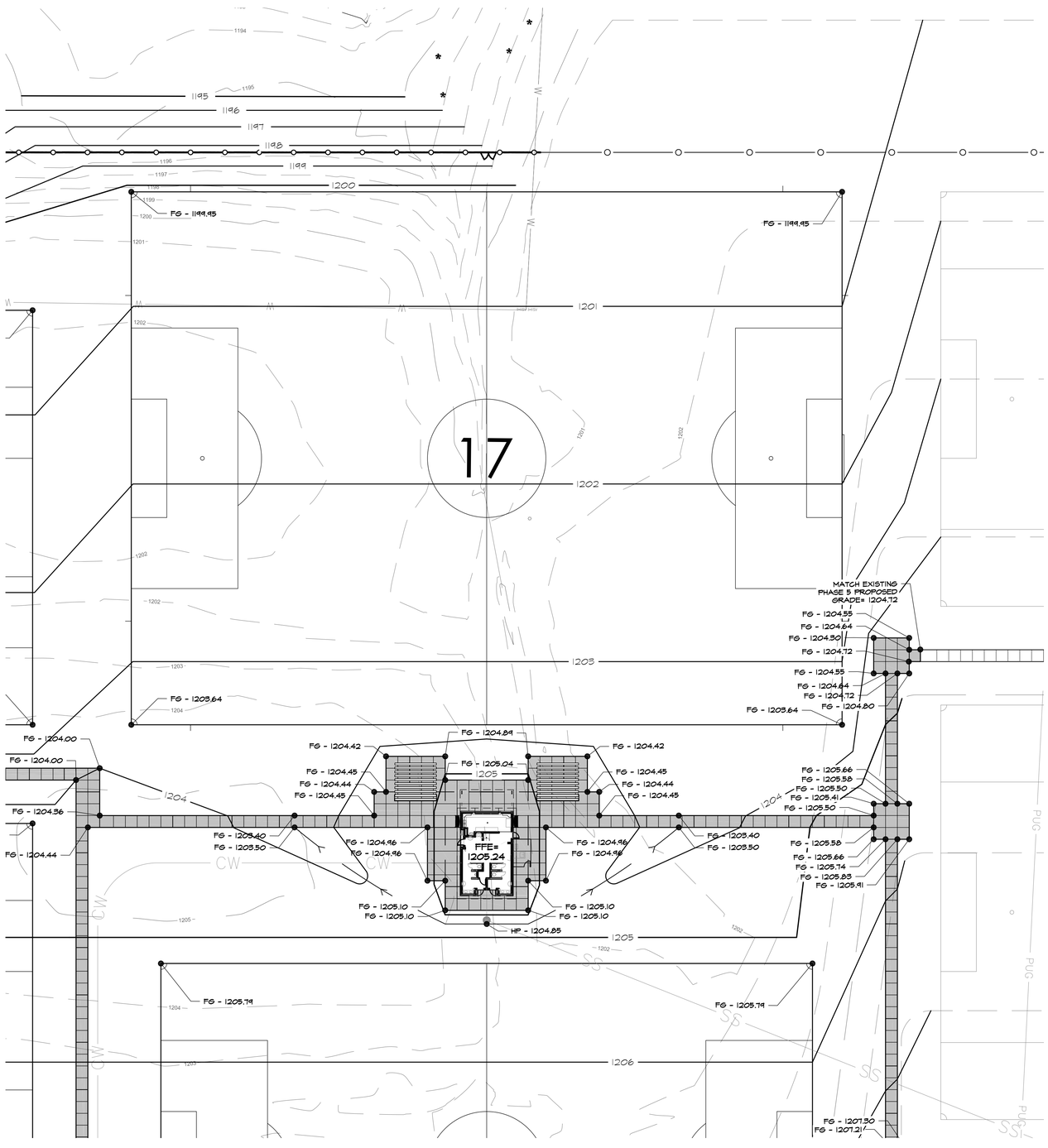

1 LAYOUT - PLAN VIEW

SCALE: 1" = 30'-0"

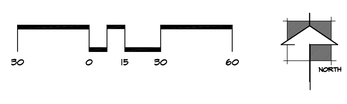

KEY MAP

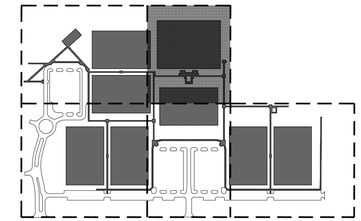

GRADING NOTES

1. CONTRACTOR TO BLEND CONTOUR ALTERATIONS INTO EXISTING TOPOGRAPHY TO PROMOTE A SMOOTH TRANSITION.
2. CONTRACTOR TO MAINTAIN AND UTILIZE NATURAL DRAINAGE PATTERNS WHERE POSSIBLE.
3. ALL SPOT ELEVATIONS HAVE BEEN TRUNCATED TO EXCLUDE THE "12" (THOUSAND/HUNDREDS) FROM THE LABEL.
4. ALL IMPERVIOUS WALKING SURFACES SHALL NOT EXCEED 2% CROSS SLOPE AND 5% SLOPE IN WALKING DIRECTION. ALL PLAZA AREAS TO MAINTAIN A MAXIMUM OF 2% SLOPE IN ANY DIRECTION. ALL GRADES MUST MEET CURRENT CITY OF NORMAN ACCESSIBILITY CODES AND REQUIREMENTS.
5. IF ERRORS ARE DISCOVERED IN REGARDS TO PROPOSED SPOT ELEVATIONS OR CONTOURS ON THE PLAN, THE CONTRACTOR IS TO CONSULT WITH LANDSCAPE ARCHITECT PRIOR TO CONTINUING CONSTRUCTION OPERATIONS.
6. CONTRACTOR IS RESPONSIBLE FOR ENSURING THAT ALL SIDEWALKS AND ACCESS RAMPS COMPLY WITH THE CITY OF NORMAN ACCESSIBILITY STANDARD REQUIREMENTS. CONTRACTOR SHALL NOTIFY THE LANDSCAPE ARCHITECT OF ANY DISCREPANCIES BETWEEN DESIGN INFORMATION AND THE CITY OF SALLISAW STANDARD REQUIREMENTS PRIOR TO CONSTRUCTION.
7. MAXIMUM SIDEWALK CROSS SLOPE IS 2%.
8. CONTRACTOR TO SMOOTH OUT HOLES AND MOUNDS IN DEMO AREA THAT WILL NOT BE GRADED IN THIS PHASE TO PREVENT INJURY OR ACCIDENTS

EROSION CONTROL NOTES

1. CONTRACTOR IS RESPONSIBLE FOR THE INSTALLATION OF ALL EROSION CONTROL MATERIAL THAT IS NECESSARY TO MEET CITY OF NORMAN CODES.
2. REFER TO SHEET D-2 FOR ALL EROSION CONTROL DETAILS.

NOTE:
CONTRACTOR IS RESPONSIBLE FOR CONTACTING NECESSARY UTILITY COMPANIES AND THE CITY OF NORMAN FOR LOCATING ALL UNDERGROUND UTILITY LINES INCLUDING SERVICE LINES AND IRRIGATION LINES.

GRADING LEGEND

TC - TOP OF CURB
BC - BOTTOM OF CURB
TG - TOP OF GRATE
FF - FINISHED FLOOR
FG - FINISH GRADE
TW - TOP OF WALL
TF - TOP OF FOOTING
FL - FLOW LINE
TL - TOP OF LANDING

DUTY OF COOPERATION

P.D.G., LLC. dba PLANNING DESIGN GROUP IN THIS STATEMENT SHALL BE KNOWN AS 'ARCHITECT'. RELEASE OF THESE PLANS CONTEMPLATES FURTHER COOPERATION AMONG THE OWNER, HIS CONTRACTOR, AND THE ARCHITECT. DESIGN AND CONSTRUCTION ARE COMPLEX. ALTHOUGH THE ARCHITECT AND HIS CONSULTANTS HAVE PERFORMED THEIR SERVICES WITH DUE CARE AND DILIGENCE, THEY CANNOT GUARANTEE PERFECTION. COMMUNICATION IS IMPERFECT AND EVERY CONTINGENCY CANNOT BE ANTICIPATED. ANY AMBIGUITY OR DISCREPANCY DISCOVERED BY THE USE OF THESE PLANS SHALL BE REPORTED IMMEDIATELY TO THE ARCHITECT. FAILURE TO NOTIFY THE ARCHITECT COMPOUNDS MISUNDERSTANDING AND INCREASES CONSTRUCTION COSTS. A FAILURE TO COOPERATE BY SIMPLE NOTICE TO THE ARCHITECT SHALL RELIEVE THE ARCHITECT FROM RESPONSIBILITY FOR ALL CONSEQUENCES. CHANGES MADE FROM THE PLANS WITHOUT CONSENT OF THE ARCHITECT ARE UNAUTHORIZED, AND SHALL RELIEVE THE ARCHITECT OF RESPONSIBILITY FOR ALL CONSEQUENCES ARRIVING OUT OF SUCH CHANGES.

COPYRIGHT NOTICE

P.D.G., LLC. dba PLANNING DESIGN GROUP RESERVE THEIR COMMON-LAW COPYRIGHT AND OTHER PROPERTY RIGHTS IN THESE PLANS. THESE PLANS AND DRAWINGS ARE NOT TO BE REPRODUCED, CHANGED OR COPIED IN ANY FORM OR MANNER WHATSOEVER WITHOUT FIRST OBTAINING THE EXPRESS WRITTEN PERMISSION AND CONSENT OF P.D.G., LLC. NOR ARE THEY TO BE ASSIGNED TO ANY THIRD PARTY WITHOUT OBTAINING SAID WRITTEN PERMISSION AND CONSENT.

BASE INFORMATION

ALL BASE INFORMATION INCLUDING EXISTING DRAINAGE WAYS, EXISTING CONTOURS, EXISTING VEGETATION, EXISTING STRUCTURES AND STREETS WERE PROVIDED TO PLANNING DESIGN GROUP BASED FROM DATA COLLECTED BY JOHNSON & ASSOCIATES INC., OKLAHOMA CITY, OK.

BEFORE YOU DIG ...
1-800-522-6543
CALL OKIE

PDG
PLANNING DESIGN GROUP
LANDSCAPE ARCHITECTURE ♦ RECREATIONAL DESIGN ♦ LAND PLANNING
5314 S. YALE AVE., SUITE 710, TULSA, OK 74135
918.628.1255 918.628.1256 FAX
WWW.PLANNINGDESIGNGROUP.COM

REGISTERED LANDSCAPE ARCHITECT
JAMES C. CROSBY
1 2 1
OKLAHOMA
5-4-22

JAMES C. CROSBY, ASLA
LANDSCAPE ARCHITECT OF RECORD

PROJECT INFORMATION

PROJECT ADDRESS:

1001 E. ROBINSON ST.,
NORMAN, OKLAHOMA 73071

PROJECT NO.	NA
DATE	04/29/22
DRAWN BY	CHECKED BY
AB	GE

GRIFFIN SOCCER COMPLEX PHASE 6 NORMAN, OKLAHOMA

ISSUE/ REVISIONS

06/03/22	BID SET

OWNER:

THE CITY OF NORMAN PARKS & RECREATION
201-C WEST GRAY
NORMAN, OK 73069
(405) 366-5472

G-3

LAYOUT PLAN

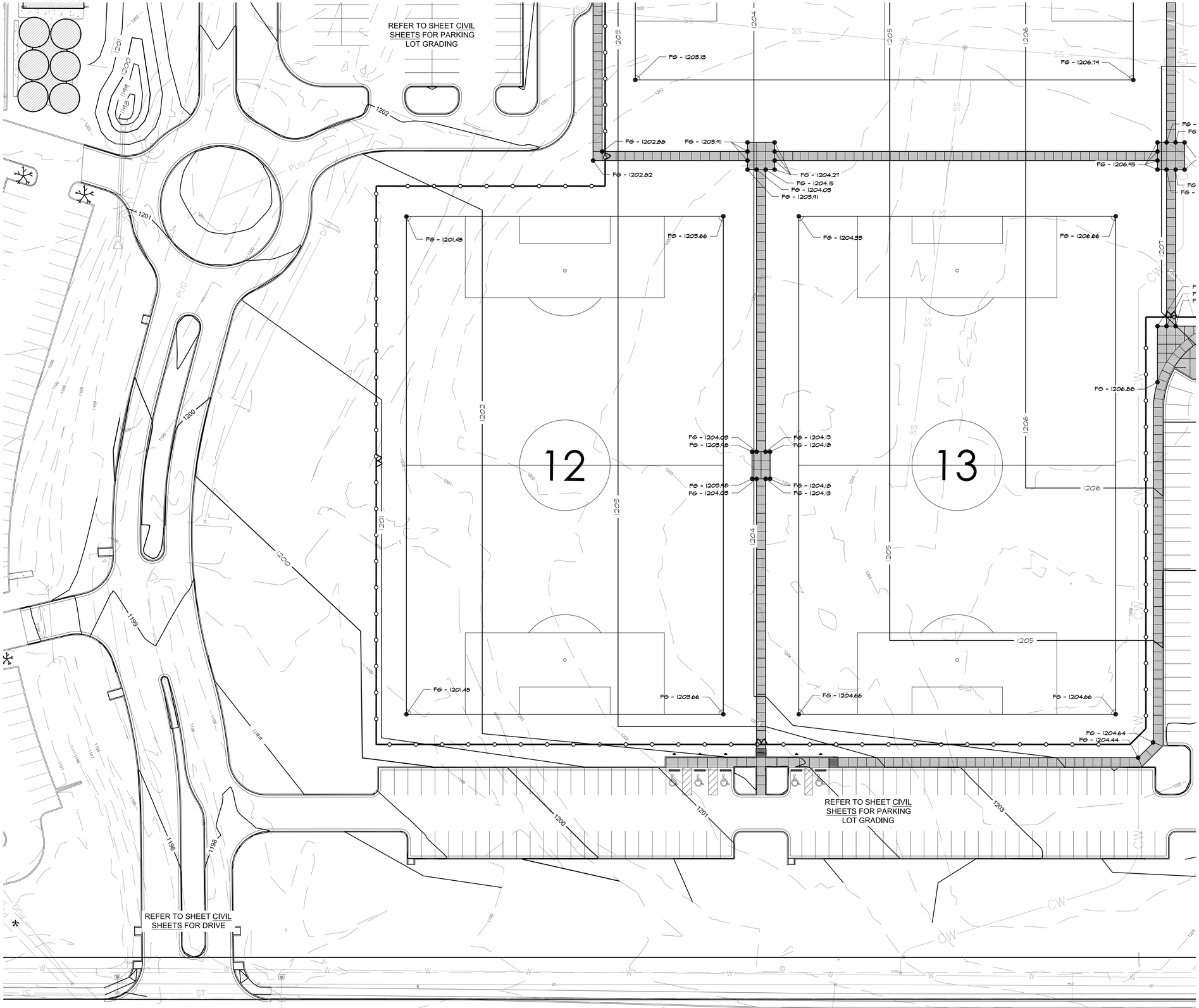

1 LAYOUT - PLAN VIEW

SCALE: 1" = 30'-0"

30 0 15 30 60

NORTH

KEY MAP

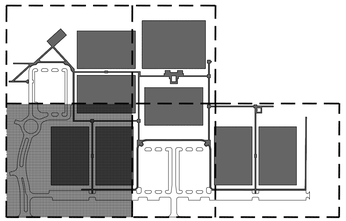

LAYOUT NOTES

1. ALL DIMENSIONS GIVEN ARE HORIZONTAL
2. LANDSCAPE ARCHITECT TO APPROVE FINAL LAYOUT OF ALL FEATURES.
3. CONTRACTOR TO GAIN APPROVAL OF OWNER OR LANDSCAPE ARCHITECT BEFORE ANY DIGGING TAKES PLACE.
4. REFER TO PROJECT DETAILS FOR SPECIFICATIONS, MATERIALS, AND CONSTRUCTION DETAILS.
5. ASSUME ALL DIMENSIONS TO BE GIVEN AT RIGHT ANGLES UNLESS OTHERWISE NOTED ON PLAN.
6. SURVEYOR TO CALCULATE COORDINATES AND STAKE THE LAYOUT OF FEATURES FOR SUB-CONTRACTOR. DIGITAL BASE INFORMATION WILL BE PROVIDED TO CONTRACTOR OR THEIR SURVEYOR. CONTRACTOR IS RESPONSIBLE FOR VERIFICATION OF ALL LAY OUT DATA PRIOR TO LAYOUT OF PROJECT.
7. CONTRACTOR IS RESPONSIBLE FOR INSTALLATION OF ALL SLEEVES FOR UNDERGROUND UTILITIES INCLUDING, BUT NOT LIMITED TO IRRIGATION, WATER FEATURE, AND ELECTRICAL ITEMS.
8. PROVIDED COORDINATES ARE FOR REFERENCE ONLY. CONTRACTOR RESPONSIBLE FOR GATHERING THEIR OWN COORDINATE INFORMATION VIA ELECTRONIC FILES PROVIDED BY DESIGNER/CITY.

DUTY OF COOPERATION

P.D.G., LLC. dba PLANNING DESIGN GROUP IN THIS STATEMENT SHALL BE KNOWN AS 'ARCHITECT'. RELEASE OF THESE PLANS CONTEMPLATES FURTHER COOPERATION AMONG THE OWNER, HIS CONTRACTOR, AND THE ARCHITECT. DESIGN AND CONSTRUCTION ARE COMPLEX. ALTHOUGH THE ARCHITECT AND HIS CONSULTANTS HAVE PERFORMED THEIR SERVICES WITH DUE CARE AND DILIGENCE, THEY CANNOT GUARANTEE PERFECTION. COMMUNICATION IS IMPERFECT AND EVERY CONTINGENCY CANNOT BE ANTICIPATED. ANY AMBIGUITY OR DISCREPANCY DISCOVERED BY THE USE OF THESE PLANS SHALL BE REPORTED IMMEDIATELY TO THE ARCHITECT. FAILURE TO NOTIFY THE ARCHITECT COMPOUNDS MISUNDERSTANDING AND INCREASES CONSTRUCTION COSTS. A FAILURE TO COOPERATE BY SIMPLE NOTICE TO THE ARCHITECT SHALL RELIEVE THE ARCHITECT FROM RESPONSIBILITY FOR ALL CONSEQUENCES. CHANGES MADE FROM THE PLANS WITHOUT CONSENT OF THE ARCHITECT ARE UNAUTHORIZED AND SHALL RELIEVE THE ARCHITECT OF RESPONSIBILITY FOR ALL CONSEQUENCES ARRIVING OUT OF SUCH CHANGES.

COPYRIGHT NOTICE

P.D.G., LLC. dba PLANNING DESIGN GROUP RESERVE THEIR COMMONLAW COPYRIGHT AND OTHER PROPERTY RIGHTS IN THESE PLANS. THESE PLANS AND DRAWINGS ARE NOT TO BE REPRODUCED, CHANGED OR COPIED IN ANY FORM OR MANNER WHATSOEVER WITHOUT FIRST OBTAINING THE EXPRESS WRITTEN PERMISSION AND CONSENT OF P.D.G., LLC. NOR ARE THEY TO BE ASSIGNED TO ANY THIRD PARTY WITHOUT OBTAINING SAID WRITTEN PERMISSION AND CONSENT.

BASE INFORMATION

ALL BASE INFORMATION INCLUDING EXISTING DRAINAGE WAYS, EXISTING CONTOURS, EXISTING VEGETATION, EXISTING STRUCTURES AND STREETS WERE PROVIDED TO PLANNING DESIGN GROUP BASED FROM DATA COLLECTED BY JOHNSON & ASSOCIATES INC., OKLAHOMA CITY, OK.

BEFORE YOU DIG ...
1-800-522-6543
CALL OKIE

PDG
PLANNING DESIGN GROUP
LANDSCAPE ARCHITECTURE • RECREATIONAL DESIGN • LAND PLANNING
5314 S. YALE AVE., SUITE 710, TULSA, OK 74135
918.628.1255 918.628.1256 FAX
WWW.PLANNINGDESIGNGROUP.COM

REGISTERED LANDSCAPE ARCHITECT
JAMES C. CROSBY
1 2 1
OKLAHOMA

JAMES C. CROSBY, ASLA
LANDSCAPE ARCHITECT OF RECORD

PROJECT INFORMATION

PROJECT ADDRESS:

1001 E. ROBINSON ST.,
NORMAN, OKLAHOMA 73071

PROJECT NO.	NA
DATE	04/29/22
DRAWN BY	CHECKED BY
AB	GE

GRIFFIN SOCCER COMPLEX PHASE 6 NORMAN, OKLAHOMA

ISSUE/ REVISIONS

06/03/22	BID SET

OWNER:

THE CITY OF NORMAN PARKS & RECREATION

201-C WEST GRAY
NORMAN, OK 73069
(405) 366-5472

G-4

LAYOUT PLAN

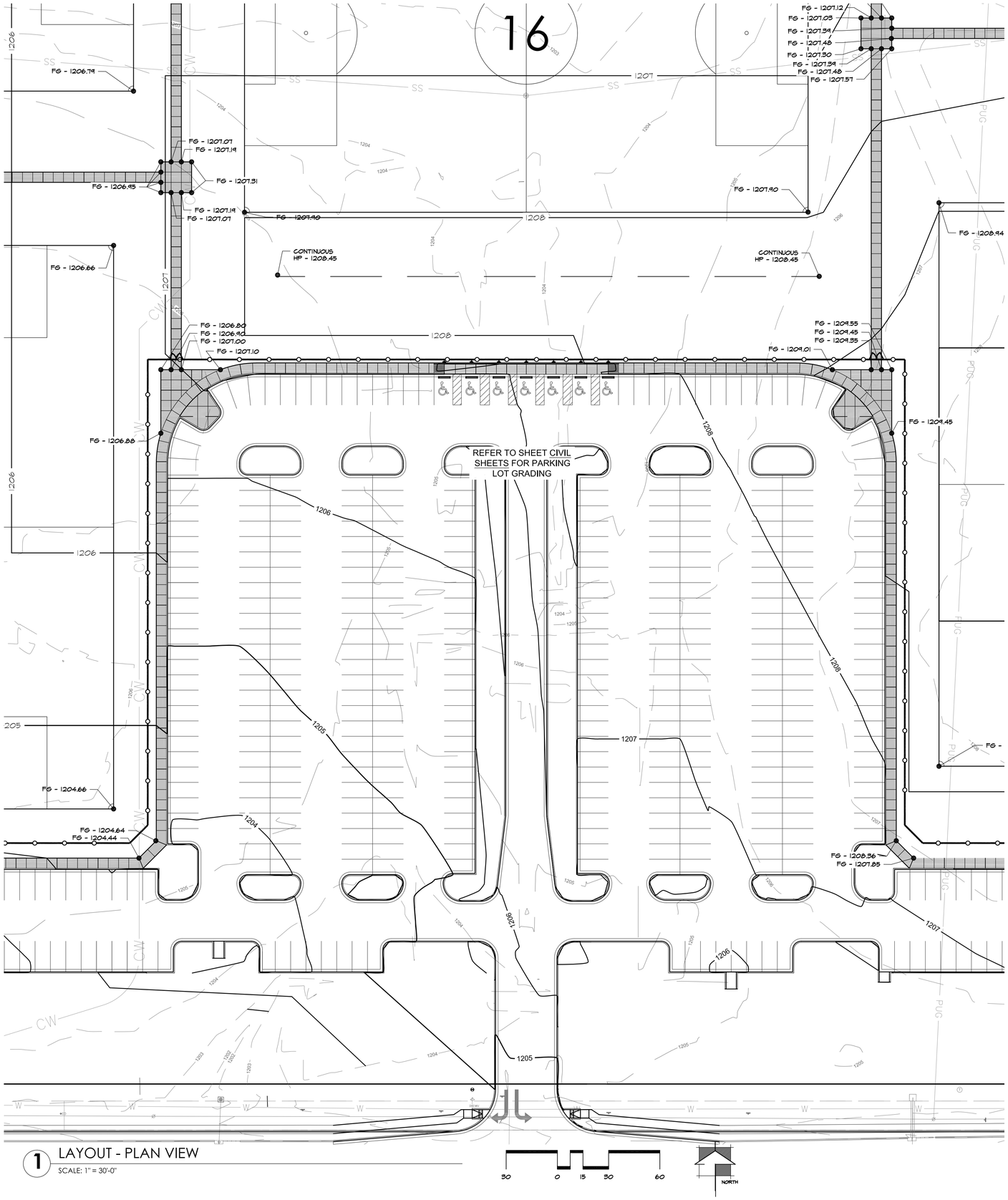

1 LAYOUT - PLAN VIEW

SCALE: 1" = 30'-0"

KEY MAP

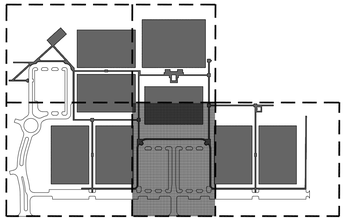

LAYOUT NOTES

1. ALL DIMENSIONS GIVEN ARE HORIZONTAL
2. LANDSCAPE ARCHITECT TO APPROVE FINAL LAYOUT OF ALL FEATURES.
3. CONTRACTOR TO GAIN APPROVAL OF OWNER OR LANDSCAPE ARCHITECT BEFORE ANY DIGGING TAKES PLACE.
4. REFER TO PROJECT DETAILS FOR SPECIFICATIONS, MATERIALS, AND CONSTRUCTION DETAILS.
5. ASSUME ALL DIMENSIONS TO BE GIVEN AT RIGHT ANGLES UNLESS OTHERWISE NOTED ON PLAN.
6. SURVEYOR TO CALCULATE COORDINATES AND STAKE THE LAYOUT OF FEATURES FOR SUB-CONTRACTOR. DIGITAL BASE INFORMATION WILL BE PROVIDED TO CONTRACTOR OR THEIR SURVEYOR. CONTRACTOR IS RESPONSIBLE FOR VERIFICATION OF ALL LAY OUT DATA PRIOR TO LAYOUT OF PROJECT.
7. CONTRACTOR IS RESPONSIBLE FOR INSTALLATION OF ALL SLEEVES FOR UNDERGROUND UTILITIES INCLUDING, BUT NOT LIMITED TO IRRIGATION, WATER FEATURE, AND ELECTRICAL ITEMS.
8. PROVIDED COORDINATES ARE FOR REFERENCE ONLY. CONTRACTOR RESPONSIBLE FOR GATHERING THEIR OWN COORDINATE INFORMATION VIA ELECTRONIC FILES PROVIDED BY DESIGNER/CITY.

DUTY OF COOPERATION

P.D.G., LLC. dba PLANNING DESIGN GROUP IN THIS STATEMENT SHALL BE KNOWN AS 'ARCHITECT'. RELEASE OF THESE PLANS CONTEMPLATES FURTHER COOPERATION AMONG THE OWNER, HIS CONTRACTOR, AND THE ARCHITECT. DESIGN AND CONSTRUCTION ARE COMPLEX. ALTHOUGH THE ARCHITECT AND HIS CONSULTANTS HAVE PERFORMED THEIR SERVICES WITH DUE CARE AND DILIGENCE, THEY CANNOT GUARANTEE PERFECTION. COMMUNICATION IS IMPERFECT AND EVERY CONTINGENCY CANNOT BE ANTICIPATED. ANY AMBIGUITY OR DISCREPANCY DISCOVERED BY THE USE OF THESE PLANS SHALL BE REPORTED IMMEDIATELY TO THE ARCHITECT. FAILURE TO NOTIFY THE ARCHITECT COMPOUNDS MISUNDERSTANDING AND INCREASES CONSTRUCTION COSTS. A FAILURE TO COOPERATE BY SIMPLE NOTICE TO THE ARCHITECT SHALL RELIEVE THE ARCHITECT FROM RESPONSIBILITY FOR ALL CONSEQUENCES. CHANGES MADE FROM THE PLANS WITHOUT CONSENT OF THE ARCHITECT ARE UNAUTHORIZED, AND SHALL RELIEVE THE ARCHITECT OF RESPONSIBILITY FOR ALL CONSEQUENCES ARRIVING OUT OF SUCH CHANGES.

COPYRIGHT NOTICE

P.D.G., LLC. dba PLANNING DESIGN GROUP RESERVE THEIR COMMONLAW COPYRIGHT AND OTHER PROPERTY RIGHTS IN THESE PLANS. THESE PLANS AND DRAWINGS ARE NOT TO BE REPRODUCED, CHANGED OR COPIED IN ANY FORM OR MANNER WHATSOEVER WITHOUT FIRST OBTAINING THE EXPRESS WRITTEN PERMISSION AND CONSENT OF P.D.G., LLC. NOR ARE THEY TO BE ASSIGNED TO ANY THIRD PARTY WITHOUT OBTAINING SAID WRITTEN PERMISSION AND CONSENT.

BASE INFORMATION

ALL BASE INFORMATION INCLUDING EXISTING DRAINAGE WAYS, EXISTING CONTOURS, EXISTING VEGETATION, EXISTING STRUCTURES AND STREETS WERE PROVIDED TO PLANNING DESIGN GROUP BASED FROM DATA COLLECTED BY JOHNSON & ASSOCIATES INC., OKLAHOMA CITY, OK

BEFORE YOU DIG ...
1-800-522-6543
CALL OKIE

PDG
PLANNING DESIGN GROUP
LANDSCAPE ARCHITECTURE ♦ RECREATIONAL DESIGN ♦ LAND PLANNING
5314 S. YALE AVE., SUITE 710, TULSA, OK 74135
918.628.1255 918.628.1256 FAX
WWW.PLANNINGDESIGNGROUP.COM

REGISTERED LANDSCAPE ARCHITECT
JAMES C. CROSBY
1 2 1
OKLAHOMA

JAMES C. CROSBY, ASLA
LANDSCAPE ARCHITECT OF RECORD

PROJECT INFORMATION

PROJECT ADDRESS:

1001 E. ROBINSON ST.,
NORMAN, OKLAHOMA 73071

PROJECT NO.	NA
DATE	04/29/22
DRAWN BY	CHECKED BY
AB	GE

GRIFFIN SOCCER COMPLEX PHASE 6 NORMAN, OKLAHOMA

ISSUE/ REVISIONS

06/03/22	BID SET

OWNER:

THE CITY OF NORMAN PARKS & RECREATION
201-C WEST GRAY
NORMAN, OK 73069
(405) 366-5472

G-5

LAYOUT PLAN

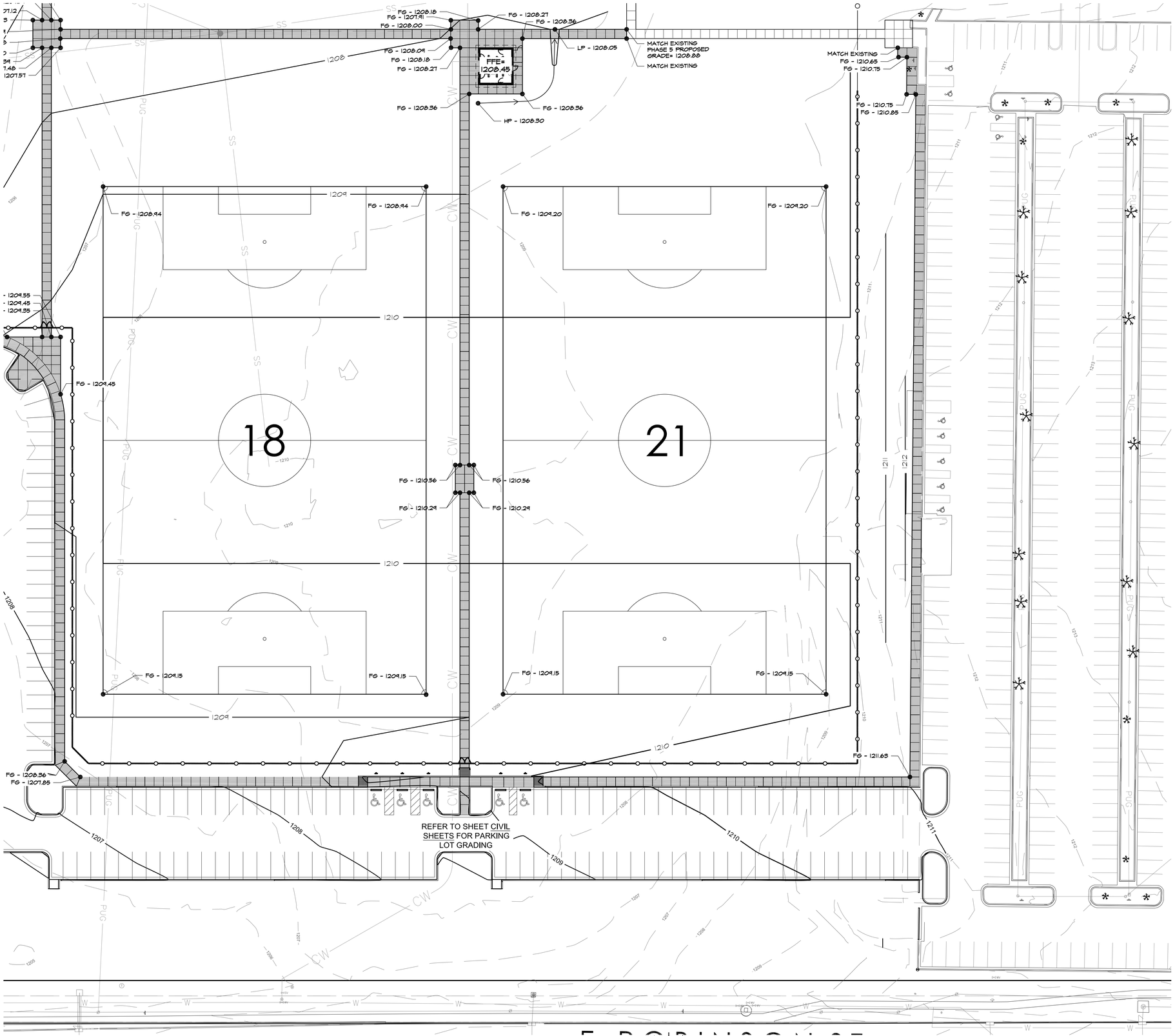

1 LAYOUT - PLAN VIEW

SCALE: 1" = 30'-0"

30 0 15 30 60

NORTH

KEY MAP

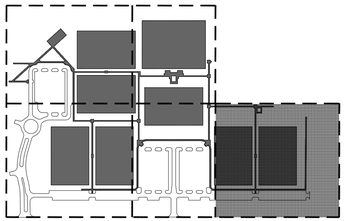

LAYOUT NOTES

1. ALL DIMENSIONS GIVEN ARE HORIZONTAL
2. LANDSCAPE ARCHITECT TO APPROVE FINAL LAYOUT OF ALL FEATURES.
3. CONTRACTOR TO GAIN APPROVAL OF OWNER OR LANDSCAPE ARCHITECT BEFORE ANY DIGGING TAKES PLACE.
4. REFER TO PROJECT DETAILS FOR SPECIFICATIONS, MATERIALS, AND CONSTRUCTION DETAILS.
5. ASSUME ALL DIMENSIONS TO BE GIVEN AT RIGHT ANGLES UNLESS OTHERWISE NOTED ON PLAN.
6. SURVEYOR TO CALCULATE COORDINATES AND STAKE THE LAYOUT OF FEATURES FOR SUB-CONTRACTOR. DIGITAL BASE INFORMATION WILL BE PROVIDED TO CONTRACTOR OR THEIR SURVEYOR. CONTRACTOR IS RESPONSIBLE FOR VERIFICATION OF ALL LAY OUT DATA PRIOR TO LAYOUT OF PROJECT.
7. CONTRACTOR IS RESPONSIBLE FOR INSTALLATION OF ALL SLEEVES FOR UNDERGROUND UTILITIES INCLUDING, BUT NOT LIMITED TO IRRIGATION, WATER FEATURE, AND ELECTRICAL ITEMS.
8. PROVIDED COORDINATES ARE FOR REFERENCE ONLY. CONTRACTOR RESPONSIBLE FOR GATHERING THEIR OWN COORDINATE INFORMATION VIA ELECTRONIC FILES PROVIDED BY DESIGNER/CITY.

DUTY OF COOPERATION

P.D.G., LLC. dba PLANNING DESIGN GROUP IN THIS STATEMENT SHALL BE KNOWN AS 'ARCHITECT'. RELEASE OF THESE PLANS CONTEMPLATES FURTHER COOPERATION AMONG THE OWNER, HIS CONTRACTOR, AND THE ARCHITECT. DESIGN AND CONSTRUCTION ARE COMPLEX. ALTHOUGH THE ARCHITECT AND HIS CONSULTANTS HAVE PERFORMED THEIR SERVICES WITH DUE CARE AND DILIGENCE, THEY CANNOT GUARANTEE PERFECTION. COMMUNICATION IS IMPERFECT AND EVERY CONTINGENCY CANNOT BE ANTICIPATED. ANY AMBIGUITY OR DISCREPANCY DISCOVERED BY THE USE OF THESE PLANS SHALL BE REPORTED IMMEDIATELY TO THE ARCHITECT. FAILURE TO NOTIFY THE ARCHITECT COMPOUNDS MISUNDERSTANDING AND INCREASES CONSTRUCTION COSTS. A FAILURE TO COOPERATE BY SIMPLE NOTICE TO THE ARCHITECT SHALL RELIEVE THE ARCHITECT FROM RESPONSIBILITY FOR ALL CONSEQUENCES. CHANGES MADE FROM THE PLANS WITHOUT CONSENT OF THE ARCHITECT ARE UNAUTHORIZED, AND SHALL RELIEVE THE ARCHITECT OF RESPONSIBILITY FOR ALL CONSEQUENCES ARRIVING OUT OF SUCH CHANGES.

COPYRIGHT NOTICE

P.D.G., LLC. dba PLANNING DESIGN GROUP RESERVE THEIR COMMONLAW COPYRIGHT AND OTHER PROPERTY RIGHTS IN THESE PLANS. THESE PLANS AND DRAWINGS ARE NOT TO BE REPRODUCED, CHANGED OR COPIED IN ANY FORM OR MANNER WHATSOEVER WITHOUT FIRST OBTAINING THE EXPRESS WRITTEN PERMISSION AND CONSENT OF P.D.G., LLC. NOR ARE THEY TO BE ASSIGNED TO ANY THIRD PARTY WITHOUT OBTAINING SAID WRITTEN PERMISSION AND CONSENT.

BASE INFORMATION

ALL BASE INFORMATION INCLUDING EXISTING DRAINAGE WAYS, EXISTING CONTOURS, EXISTING VEGETATION, EXISTING STRUCTURES AND STREETS WERE PROVIDED TO PLANNING DESIGN GROUP BASED FROM DATA COLLECTED BY JOHNSON & ASSOCIATES INC., OKLAHOMA CITY, OK

BEFORE YOU DIG ...
1-800-522-6543
CALL OKIE

PDG
PLANNING DESIGN GROUP
LANDSCAPE ARCHITECTURE • RECREATIONAL DESIGN • LAND PLANNING
5314 S. YALE AVE., SUITE 710, TULSA, OK 74135
918.628.1255 918.628.1256 FAX
WWW.PLANNINGDESIGNGROUP.COM

REGISTERED LANDSCAPE ARCHITECT
JAMES C. CROSBY
121
OKLAHOMA
5-6-22

JAMES C. CROSBY, ASLA
LANDSCAPE ARCHITECT OF RECORD

PROJECT INFORMATION

PROJECT ADDRESS:

1001 E. ROBINSON ST.,
NORMAN, OKLAHOMA 73071

PROJECT NO.	NA
DATE	04/29/22
DRAWN BY	CHECKED BY
AB	GE

GRIFFIN SOCCER COMPLEX PHASE 6 NORMAN, OKLAHOMA

ISSUE/ REVISIONS

06/03/22	BID SET

OWNER:

THE CITY OF NORMAN PARKS & RECREATION
201-C WEST GRAY
NORMAN, OK 73069
(405) 366-5472

G-6

LAYOUT PLAN

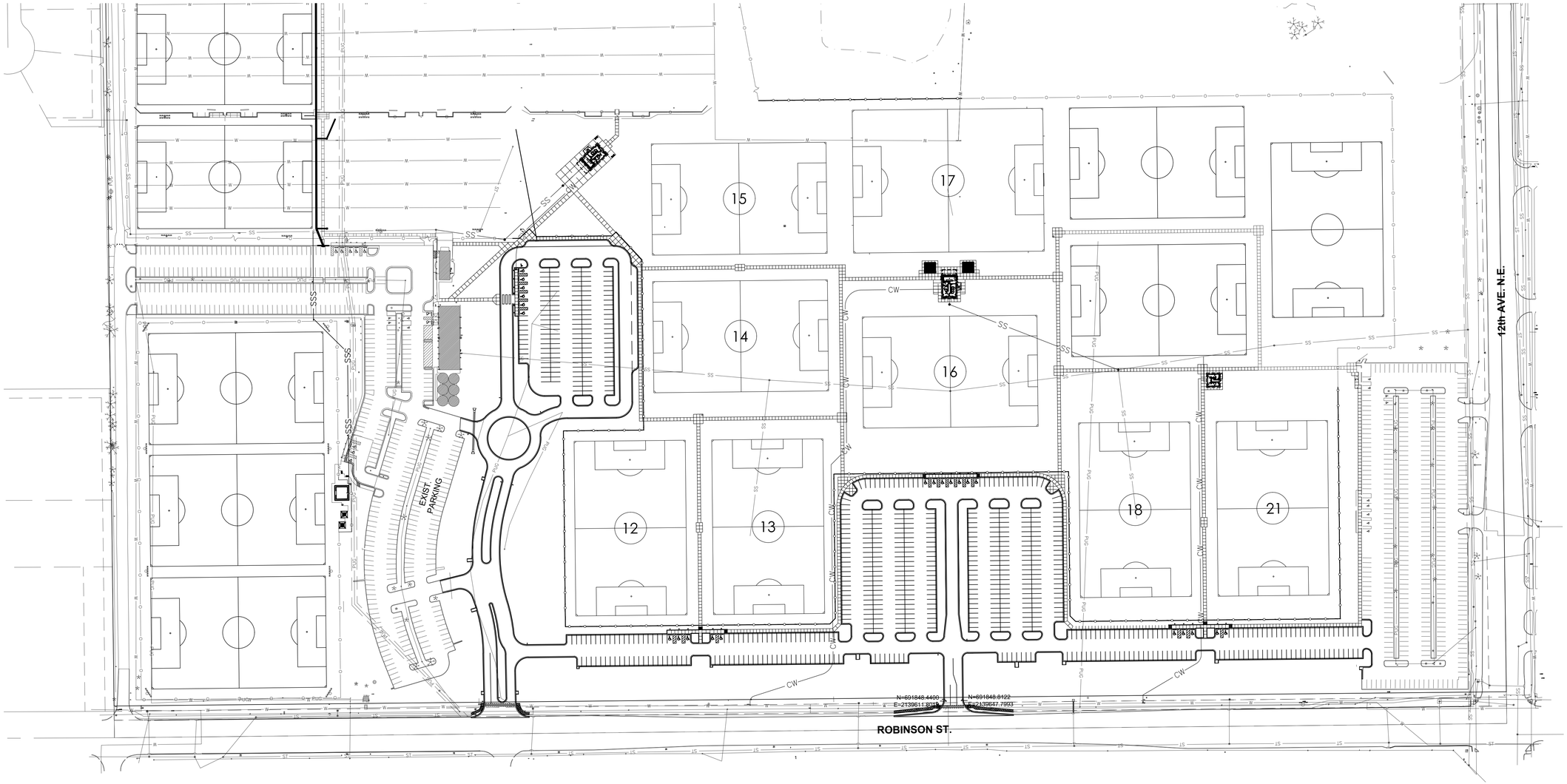

GENERAL NOTES

1. ALL WORK PERFORMED AND MATERIALS SUPPLIED SHALL CONFORM TO THE SITE WORK SPECIFICATIONS. ANY WORK NOT COVERED IN THE SITE WORK SPECIFICATIONS SHALL CONFORM TO THE OKLAHOMA DEPARTMENT OF TRANSPORTATION CONSTRUCTION SPECIFICATIONS, LATEST EDITION.
2. UNLESS OTHERWISE SPECIFIED, THE CONTRACTOR SHALL BE RESPONSIBLE FOR HIS OWN CONSTRUCTION STAKING.
3. ALL SIGNS, PAVEMENT MARKINGS, AND OTHER TRAFFIC CONTROL DEVICES SHALL CONFORM TO THE MANUAL ON UNIFORM TRAFFIC CONTROL DEVICES, LATEST EDITION. ALL PAVEMENT STRIPING SHALL BE FOUR (4) INCHES WIDE, UNLESS SHOWN OTHERWISE ON THE PLANS.
4. UNLESS OTHERWISE STATED IN THE GENERAL CONDITIONS, THE CONTRACTOR SHALL BE RESPONSIBLE FOR ALL TESTING. THE RESULTS OF THE TESTS SHALL BE FORWARDED TO THE ENGINEER FOR HIS REVIEW AND APPROVAL.
5. THE CONTRACTOR SHALL PROVIDE A MEDIUM BROOM FINISH ON ALL CONCRETE WALKS, RAMPS AND PAVING SURFACES UNLESS OTHERWISE NOTED.
6. THE CONTRACTOR MUST FILE A "NOTICE OF INTENT" WITH THE APPROPRIATE ADMINISTRATIVE AGENCY PRIOR TO COMMENCING EARTHWORK, CLEARING OR DEMOLITION OPERATIONS.
7. THE CONTRACTOR SHALL SATISFY HIMSELF AS TO THE ACCURACY OF ALL SITE PLAN DIMENSIONS AND MEASUREMENTS AND SHALL CONFIRM THE ACCURACY AND LOCATION OF THE PROJECT BOUNDARY PRIOR TO CONSTRUCTION. ANY DISCREPANCIES DISCOVERED SHALL BE BROUGHT TO THE ATTENTION OF THE ENGINEER-OF-RECORD FOR RESOLUTION PRIOR TO CONSTRUCTION.
8. ALL DIMENSIONS ARE TO FACE-OF-CURB UNLESS OTHERWISE SPECIFIED.
9. PARKING LOT LAYOUT IS PARALLEL AND PERPENDICULAR TO BUILDING ORIENTATION UNLESS OTHERWISE NOTED.
10. REMOVE STRIPING IN NEW DRIVE LANES BETWEEN NEW LANDSCAPE MEDIANS.

0 100' 200'

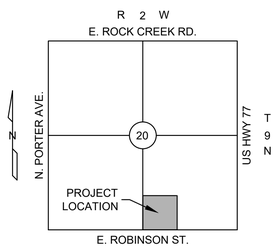

LOCATION MAP
SCALE: 1"=2000'

INDEX OF SHEETS

NO.	DESCRIPTION
C1.0	OVERALL SITE GENERAL LAYOUT
C2.0-C2.4	SITE DIMENSIONAL PLAN
C3.0-C3.5	PAVING & GRADING PLAN
C4.0-C4.2	UTILITY PLAN
C5.0-C5.1	DETAILS

NOTE:
COORDINATE w/ SHEETS EC-1, DP-1 & SP-1

ONE CALL UTILITY LOCATION NUMBER
840-5032
1-800-522-6543
This number is to be used for information on the location of all underground utilities. Contact this number and other numbers specified in the plans prior to any excavation.

PDG
PLANNING DESIGN GROUP
LANDSCAPE ARCHITECTURE ■ RECREATIONAL DESIGN ■ LAND PLANNING
5314 S. YALE AVE., SUITE 710, TULSA, OK 74135
918.628.1255 918.628.1256 FAX
WWW.PLANNINGDESIGNGROUP.COM

J&A
Johnson & Associates, Inc.
1 E. Sheridan Ave., Suite 200
Oklahoma City, OK 73104
(405) 235-8075 FAX (405) 235-8078 www.jaokc.com
Certificate of Authorization #1484 Exp. Date: 06-30-2019
ENGINEERS • SURVEYORS • PLANNERS

REGISTERED PROFESSIONAL ENGINEER
TIMOTHY JOHNSON
12277
OKLAHOMA
RENEWAL DATE: 04/30/2024

PROJECT INFORMATION

PROJECT ADDRESS:

1001 E. ROBINSON ST.,
NORMAN, OKLAHOMA 73071

PROJECT NO.	
DATE	
DRAWN BY	CHECKED BY

GRIFFIN SOCCER COMPLEX PHASE 6 NORMAN, OKLAHOMA

ISSUE/ REVISIONS

04/29/22	65% REVIEW SET
06/03/22	BID SET

OWNER:
THE CITY OF NORMAN PARKS & RECREATION
201-C WEST GRAY
NORMAN, OK 73069
(405) 366-5472

C1.0

OVERALL SITE GENERAL LAYOUT

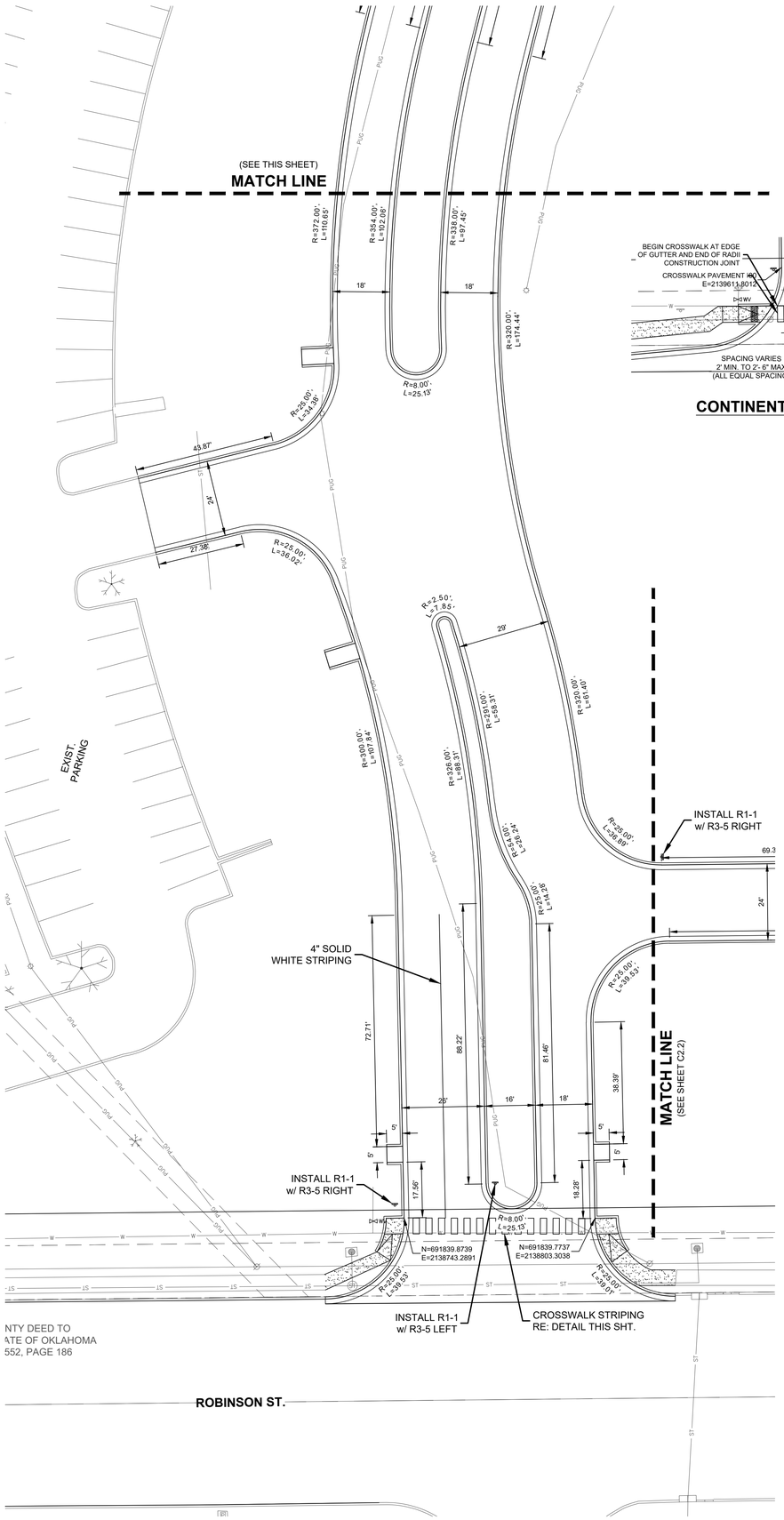

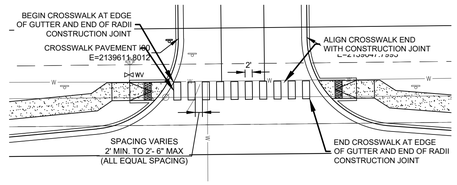

CONTINENTAL CROSSWALK DETAIL

SCALE: N.T.S.

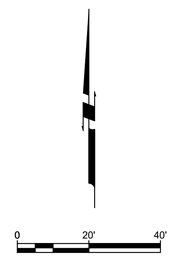

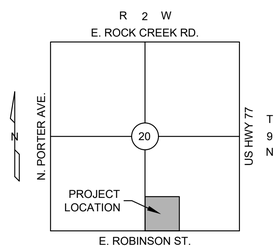

LOCATION MAP

SCALE: 1"=2000'

NOTE:
COORDINATE w/ LANDSCAPE PLAN
SHEETS LP-1 THROUGH LP-5
(COORDINATE DEMOLITION w/ SHEET DP-1)

ONE CALL UTILITY LOCATION NUMBER
840-5032
1-800-522-6543
This number is to be used for information on the location of all underground utilities. Contact this number and other numbers specified in the plans prior to any excavation.

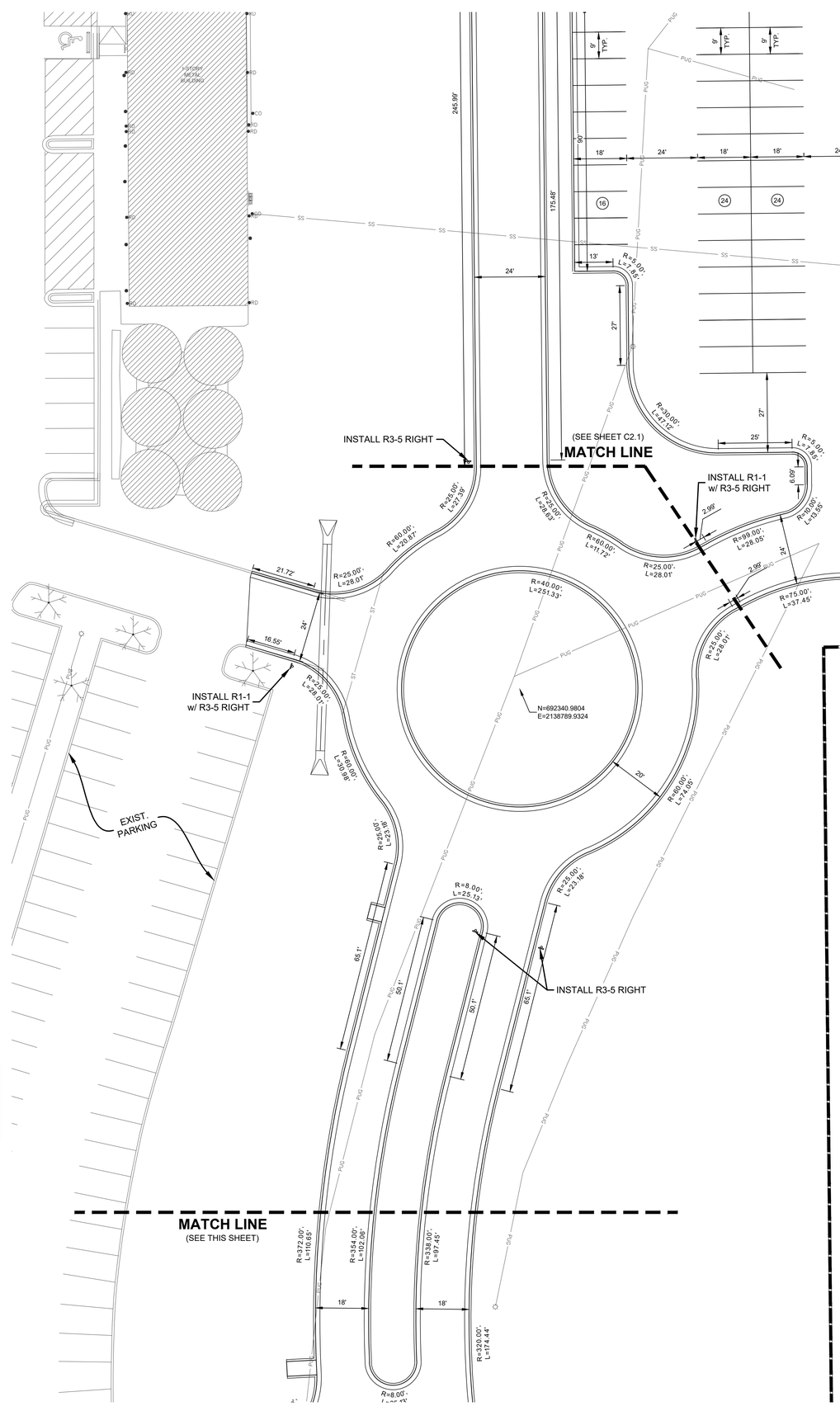

PDG
PLANNING DESIGN GROUP
LANDSCAPE ARCHITECTURE • RECREATIONAL DESIGN • LAND PLANNING
5314 S. YALE AVE., SUITE 710, TULSA, OK 74135
918.628.1255 918.628.1256 FAX
WWW.PLANNINGDESIGNGROUP.COM

J&A
Johnson & Associates, Inc.
1 E. Sheridan Ave., Suite 200
Oklahoma City, OK 73104
(405) 235-8075 FAX (405) 235-8078 www.jaokc.com
Certificate of Authorization #1484 Exp. Date: 06-30-2019
ENGINEERS • SURVEYORS • PLANNERS

REGISTERED PROFESSIONAL ENGINEER TIMOTHY JOHNSON 12277 OKLAHOMA

RENEWAL DATE: 04/30/2024

PROJECT INFORMATION	
PROJECT ADDRESS:	
1001 E. ROBINSON ST., NORMAN, OKLAHOMA 73071	
PROJECT NO.	
DATE	
DRAWN BY	CHECKED BY

GRIFFIN SOCCER COMPLEX PHASE 6 NORMAN, OKLAHOMA

ISSUE/ REVISIONS	
04/29/22	65% REVIEW SET
06/03/22	BID SET

OWNER:
THE CITY OF NORMAN PARKS & RECREATION
201-C WEST GRAY
NORMAN, OK 73069
(405) 366-5472

C2.0

SITE DIMENSIONAL PLAN

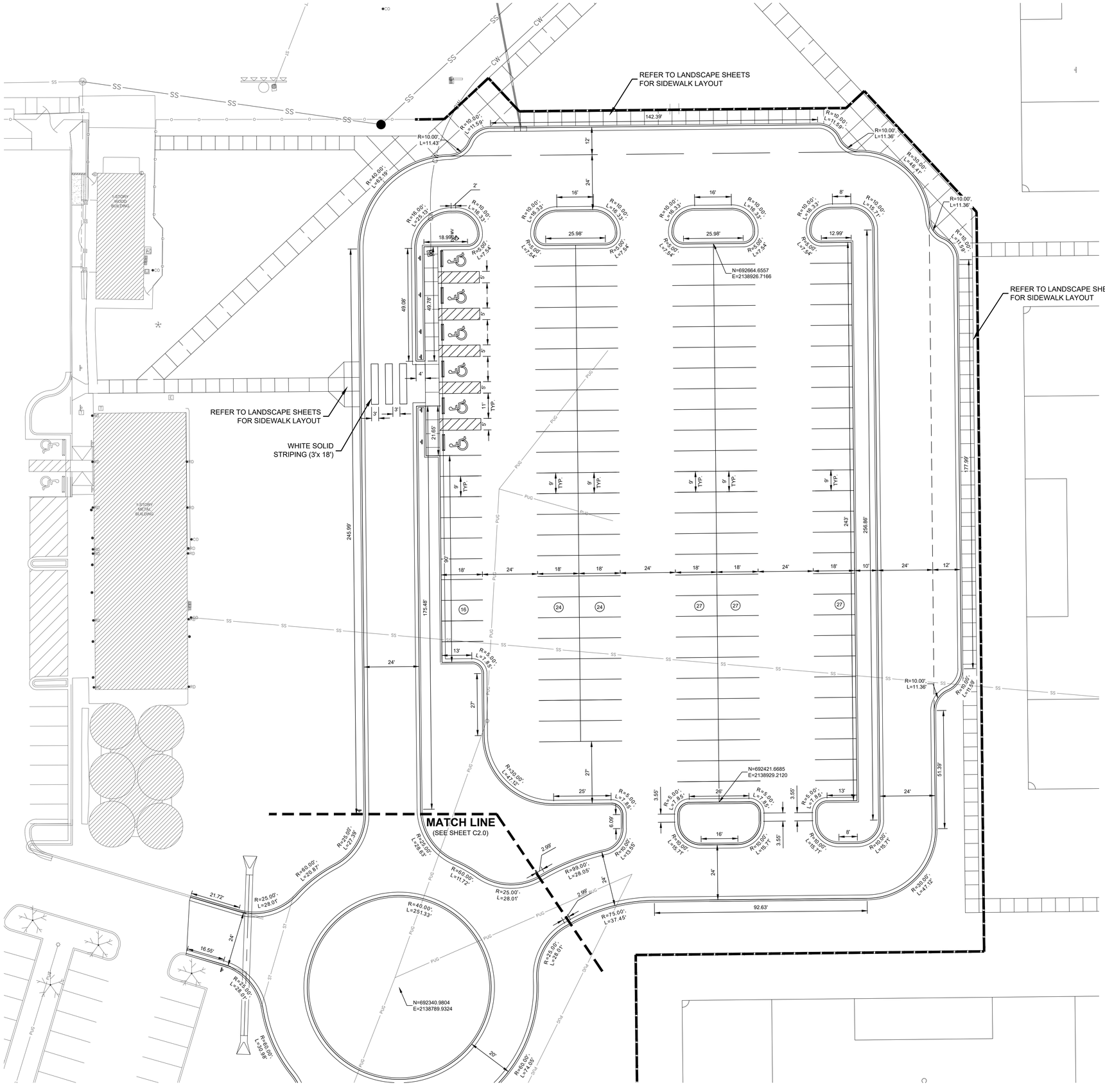

0 20' 40'

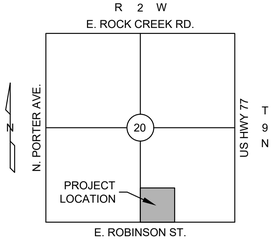

LOCATION MAP

SCALE: 1"=2000'

NOTE:
COORDINATE w/ LANDSCAPE PLAN
SHEETS LP-1 THROUGH LP-5
(COORDINATE DEMOLITION w/ SHEET DP-1)

ONE CALL UTILITY LOCATION NUMBER

840-5032
1-800-522-6543

This number is to be used for information on the location of all underground utilities. Contact this number and other numbers specified in the plans prior to any excavation.

PDG
PLANNING DESIGN GROUP

LANDSCAPE ARCHITECTURE • RECREATIONAL DESIGN • LAND PLANNING

5314 S. YALE AVE., SUITE 710, TULSA, OK 74135
918.628.1255 918.628.1256 FAX
WWW.PLANNINGDESIGNGROUP.COM

J&A
Johnson & Associates, Inc.
1 E. Sheridan Ave., Suite 200
Oklahoma City, OK 73104
(405) 235-8075 FAX (405) 235-8078 www.jaokc.com
Certificate of Authorization #1484 Exp. Date: 06-30-2019
ENGINEERS • SURVEYORS • PLANNERS

REGISTERED PROFESSIONAL ENGINEER
TIMOTHY JOHNSON
12277
OKLAHOMA

RENEWAL DATE: 04/30/2024

PROJECT INFORMATION

PROJECT ADDRESS:

1001 E. ROBINSON ST.,
NORMAN, OKLAHOMA 73071

PROJECT NO.	
DATE	
DRAWN BY	CHECKED BY

GRIFFIN SOCCER COMPLEX PHASE 6 NORMAN, OKLAHOMA

ISSUE/ REVISIONS

04/29/22	65% REVIEW SET
06/03/22	BID SET

OWNER:

THE CITY OF NORMAN PARKS & RECREATION
201-C WEST GRAY
NORMAN, OK 73069
(405) 366-5472

C2.1

SITE DIMENSIONAL PLAN

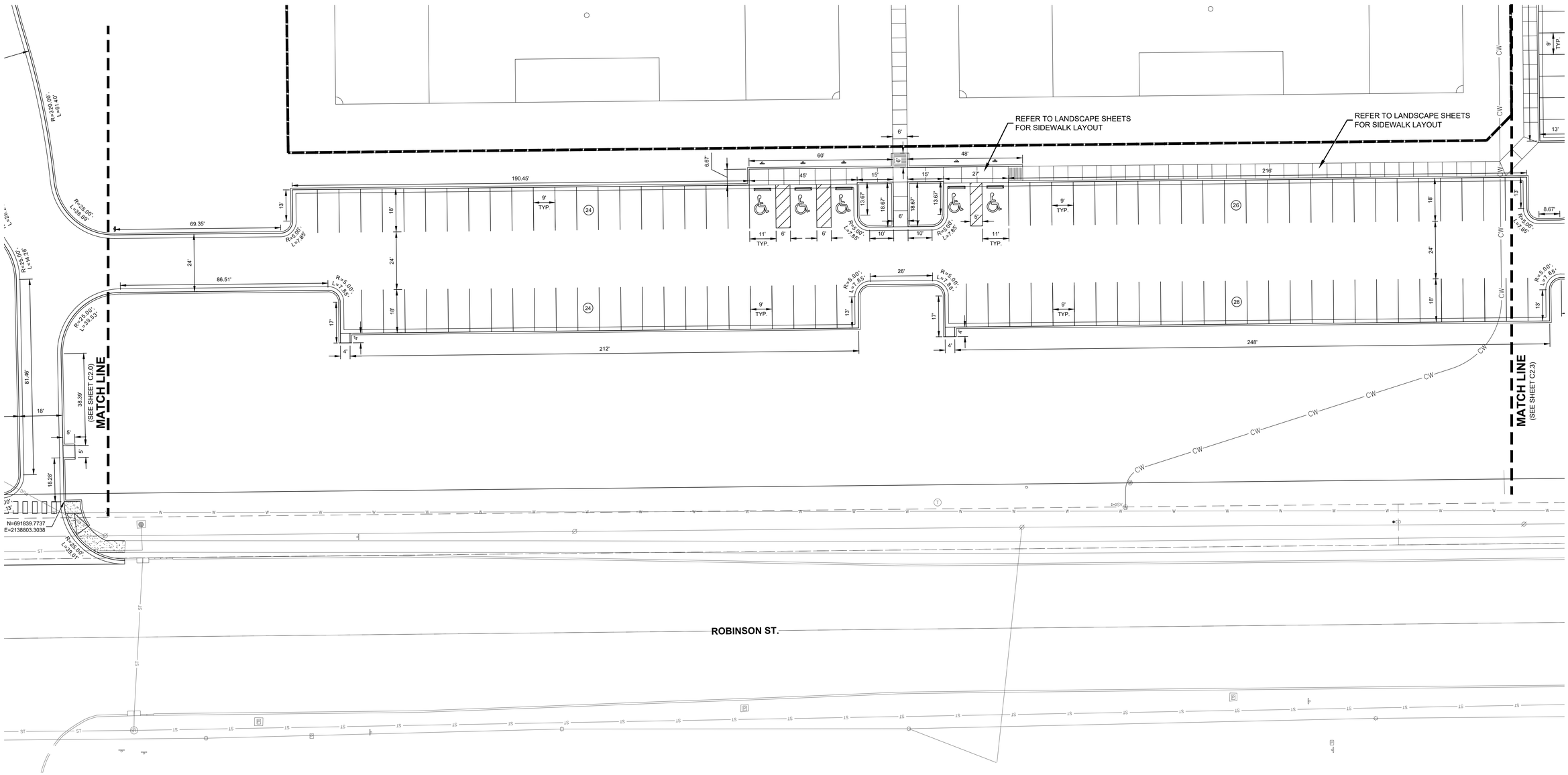

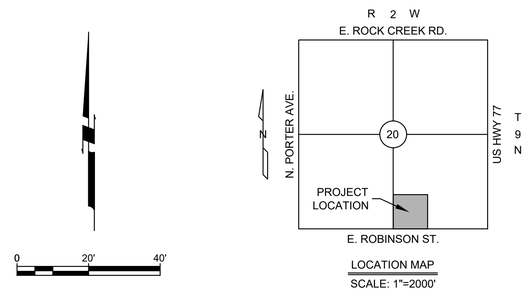

LOCATION MAP
SCALE: 1"=2000'

NOTE:
COORDINATE w/ LANDSCAPE PLAN
SHEETS LP-1 THROUGH LP-5
(COORDINATE DEMOLITION w/ SHEET DP-1)

ONE CALL UTILITY LOCATION NUMBER
840-5032
1-800-522-6543
This number is to be used for information on the location of all underground utilities. Contact this number and other numbers specified in the plans prior to any excavation.

PDG
PLANNING DESIGN GROUP
LANDSCAPE ARCHITECTURE ■ RECREATIONAL DESIGN ■ LAND PLANNING
5314 S. YALE AVE., SUITE 710, TULSA, OK 74135
918.628.1255 918.628.1256 FAX
WWW.PLANNINGDESIGNGROUP.COM

J&A
Johnson & Associates, Inc.
1 E. Sheridan Ave., Suite 200
Oklahoma City, OK 73104
(405) 235-8075 FAX (405) 235-8078 www.jaokc.com
Certificate of Authorization #1484 Exp. Date: 06-30-2019
ENGINEERS • SURVEYORS • PLANNERS

REGISTERED PROFESSIONAL ENGINEER
TIMOTHY JOHNSON
12277
OKLAHOMA
RENEWAL DATE: 04/30/2024

PROJECT INFORMATION

PROJECT ADDRESS:

1001 E. ROBINSON ST.,
NORMAN, OKLAHOMA 73071

PROJECT NO.	
DATE	
DRAWN BY	CHECKED BY

GRIFFIN SOCCER COMPLEX
PHASE 6
NORMAN, OKLAHOMA

ISSUE/ REVISIONS

04/29/22	65% REVIEW SET
06/03/22	BID SET

OWNER:
THE CITY OF NORMAN PARKS & RECREATION
201-C WEST GRAY
NORMAN, OK 73069
(405) 366-5472

C2.2

SITE DIMENSIONAL PLAN

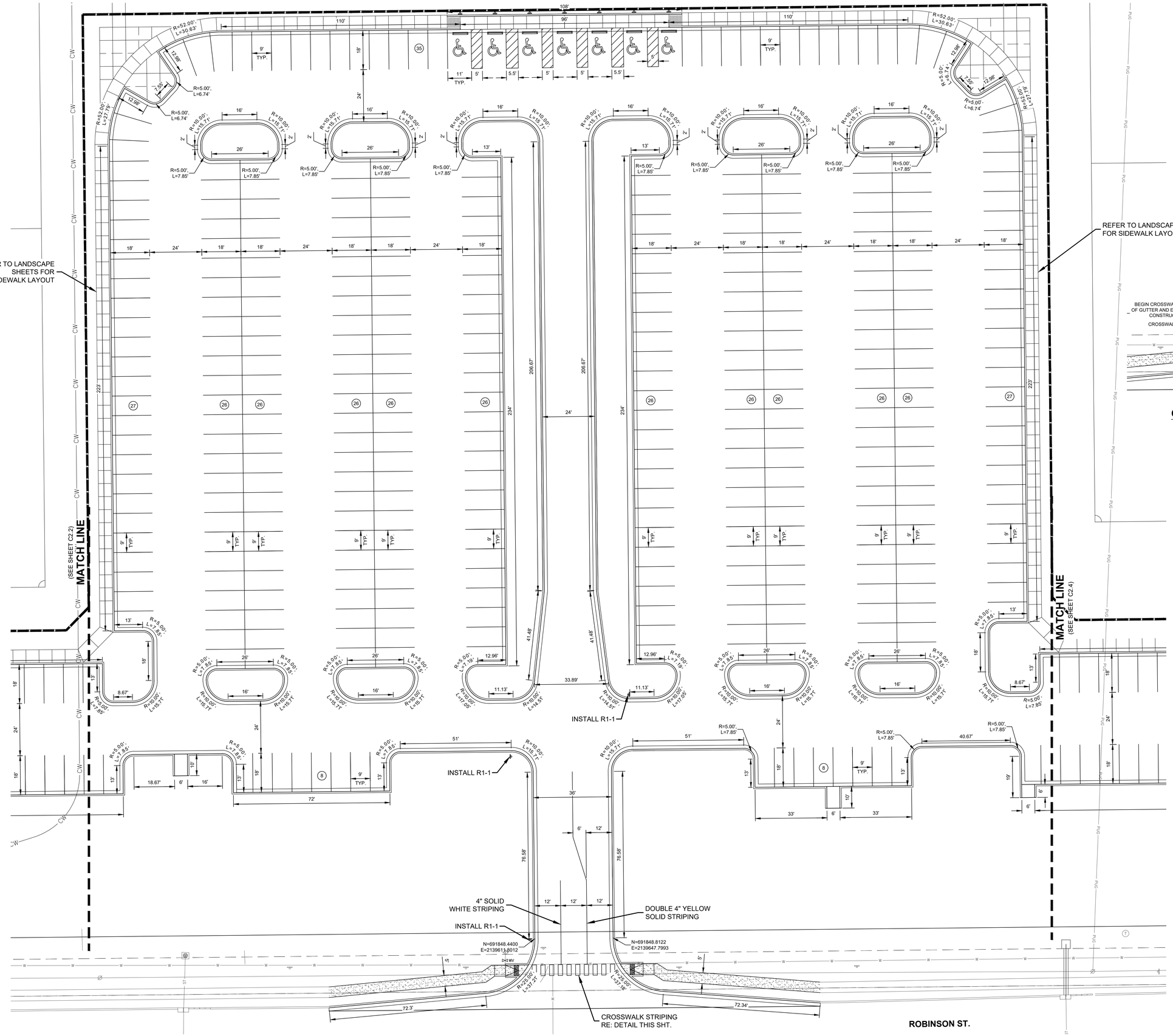

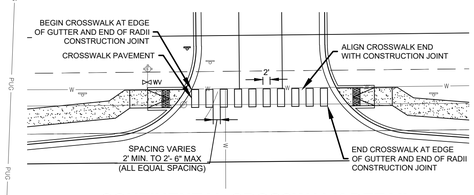

CONTINENTAL CROSSWALK DETAIL

SCALE: N.T.S.

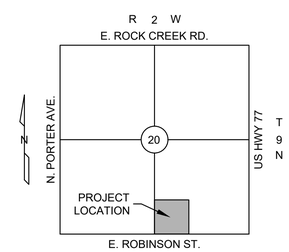

LOCATION MAP

SCALE: 1"=2000'

NOTE:
COORDINATE w/ LANDSCAPE PLAN SHEETS LP-1 THROUGH LP-5
(COORDINATE DEMOLITION w/ SHEET DP-1)

ONE CALL UTILITY LOCATION NUMBER
840-5032
1-800-522-6543
This number is to be used for information on the location of all underground utilities. Contact this number and other numbers specified in the plans prior to any excavation.

PDG
PLANNING DESIGN GROUP
LANDSCAPE ARCHITECTURE ■ RECREATIONAL DESIGN ■ LAND PLANNING
5314 S. YALE AVE., SUITE 710, TULSA, OK 74135
918.628.1255 918.628.1256 FAX
WWW.PLANNINGDESIGNGROUP.COM

Johnson & Associates, Inc.
1 E. Sheridan Ave., Suite 200
Oklahoma City, OK 73104
(405) 235-8075 FAX (405) 235-8078 www.jaokc.com
Certificate of Authorization #1484 Exp. Date: 06-30-2019
ENGINEERS • SURVEYORS • PLANNERS

REGISTERED PROFESSIONAL ENGINEER
TIMOTHY JOHNSON
12277
OKLAHOMA

RENEWAL DATE: 04/30/2024

PROJECT INFORMATION

PROJECT ADDRESS:

1001 E. ROBINSON ST.,
NORMAN, OKLAHOMA 73071

PROJECT NO.	
DATE	
DRAWN BY	CHECKED BY

GRIFFIN SOCCER COMPLEX PHASE 6 NORMAN, OKLAHOMA

ISSUE/ REVISIONS	
04/29/22	65% REVIEW SET
06/03/22	BID SET

OWNER:

THE CITY OF NORMAN PARKS & RECREATION
201-C WEST GRAY
NORMAN, OK 73069
(405) 366-5472

C2.3

SITE DIMENSIONAL PLAN

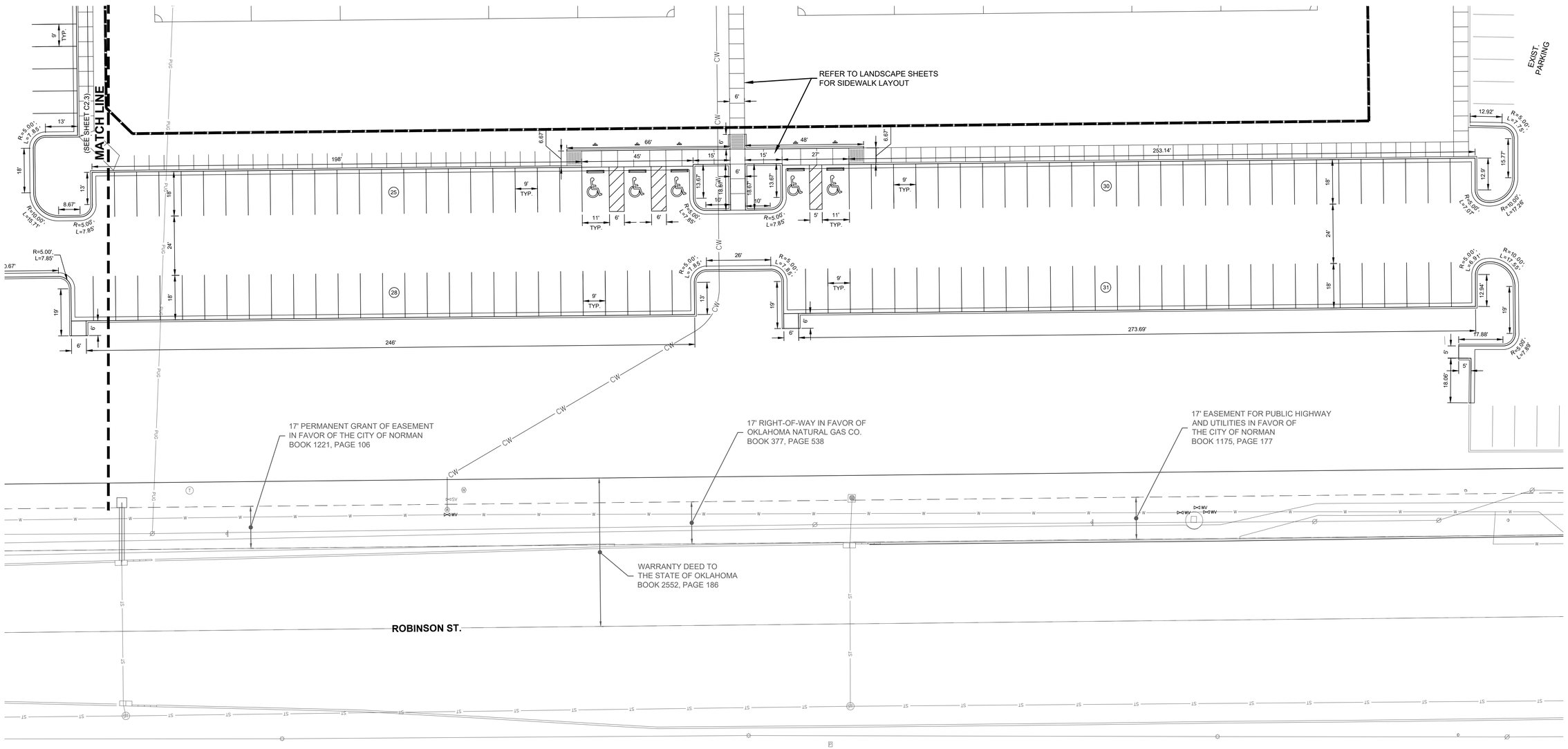

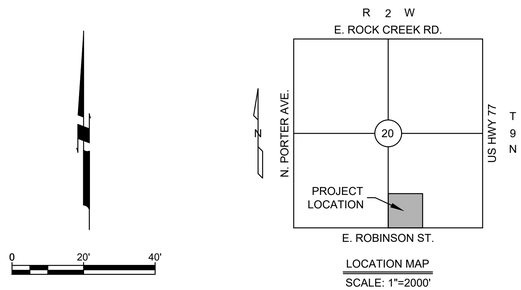

LOCATION MAP
SCALE: 1"=2000'

0 20' 40'

NOTE:
COORDINATE w/ LANDSCAPE PLAN
SHEETS LP-1 THROUGH LP-5
(COORDINATE DEMOLITION w/ SHEET DP-1)

ONE CALL UTILITY LOCATION NUMBER
840-5032
1-800-522-6543
This number is to be used for information on the location of all underground utilities. Contact this number and other numbers specified in the plans prior to any excavation.

PDG
PLANNING DESIGN GROUP
LANDSCAPE ARCHITECTURE ■ RECREATIONAL DESIGN ■ LAND PLANNING
5314 S. YALE AVE., SUITE 710, TULSA, OK 74135
918.628.1255 918.628.1256 FAX
WWW.PLANNINGDESIGNGROUP.COM

Johnson & Associates, Inc.
1 E. Sheridan Ave., Suite 200
Oklahoma City, OK 73104
(405) 235-8075 FAX (405) 235-8078 www.jaokc.com
Certificate of Authorization #1484 Exp. Date: 06-30-2019
ENGINEERS • SURVEYORS • PLANNERS

REGISTERED PROFESSIONAL ENGINEER
TIMOTHY JOHNSON
12277
OKLAHOMA

RENEWAL DATE: 04/30/2024

PROJECT INFORMATION

PROJECT ADDRESS:

1001 E. ROBINSON ST.,
NORMAN, OKLAHOMA 73071

PROJECT NO.	
DATE	
DRAWN BY	CHECKED BY

GRIFFIN SOCCER COMPLEX
PHASE 6
NORMAN, OKLAHOMA

ISSUE/ REVISIONS

04/29/22	65% REVIEW SET
06/03/22	BID SET

OWNER:

THE CITY OF NORMAN PARKS & RECREATION
201-C WEST GRAY
NORMAN, OK 73069
(405) 366-5472

C2.4

SITE DIMENSIONAL PLAN

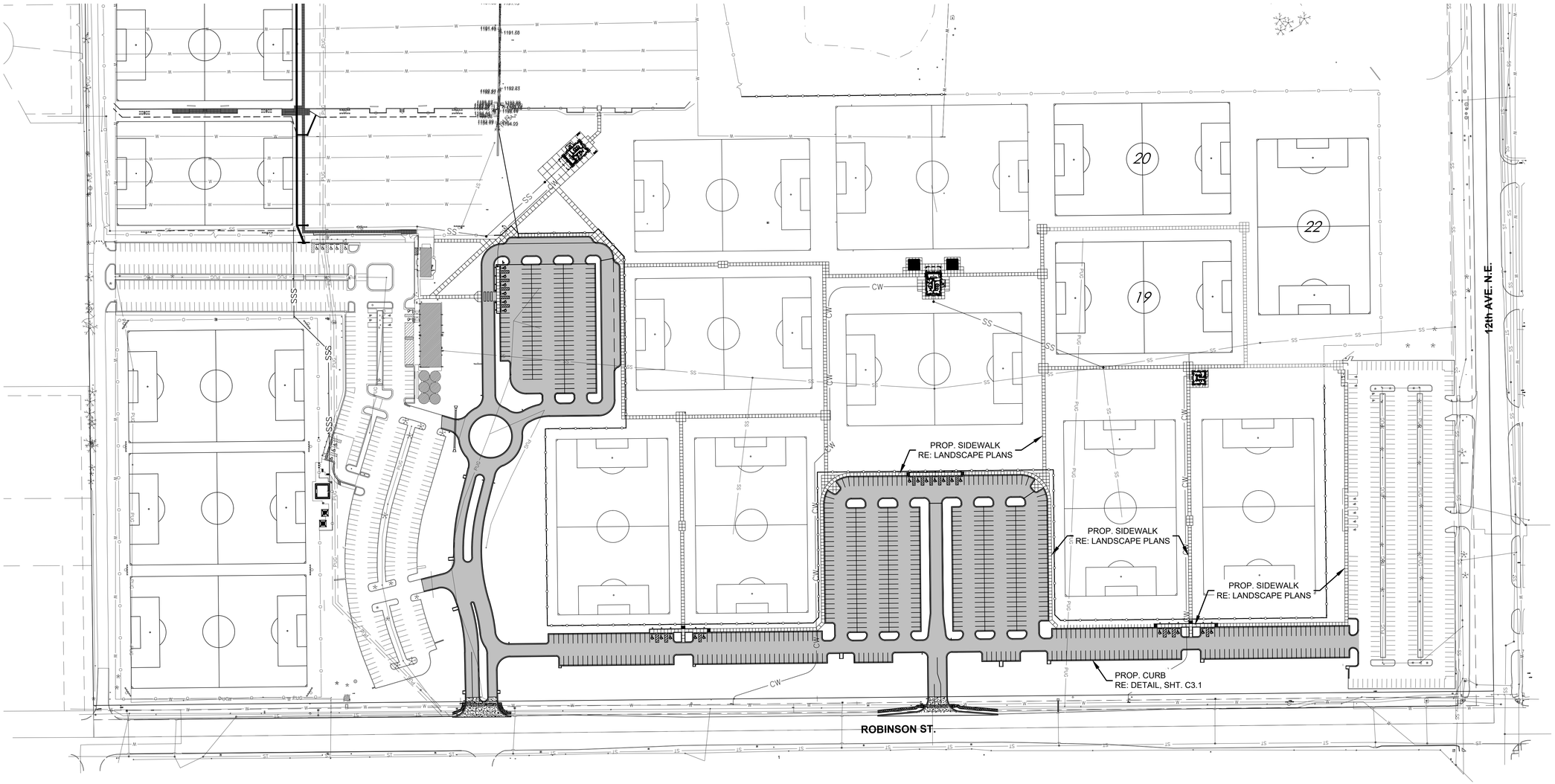

GRADING NOTES

1. ALL FILL AREAS SHALL BE COMPACTED TO 95% STANDARD PROCTOR DENSITY (OR AS DIRECTED IN THE GEOTECHNICAL REPORT).
2. CONTRACTOR SHALL BE RESPONSIBLE FOR VERIFYING THE LOCATION OF ALL UTILITIES PRIOR TO EXCAVATION: DAMAGE TO ANY UTILITIES OR STRUCTURES DURING EXCAVATION AND CONSTRUCTION SHALL BE THE RESPONSIBILITY OF THE CONTRACTOR. ONE CALL UTILITY LOCATION NUMBER IS 840-5032 OR 1-800-522-6543.
3. THE CONTRACTOR SHALL SATISFY HIMSELF AS TO THE ACCURACY OF ALL MEASUREMENTS PRIOR TO CONSTRUCTION OF ANY PERMANENT STRUCTURE.
4. ALL SITE GRADING SHALL INCLUDE THE FOLLOWING:
   A) TOP SOIL REMOVAL, STOCKPILE AND RE-SPREADING IN LANDSCAPE AREAS.
   B) EXCAVATION AND COMPACTED EMBANKMENT SHALL BE DONE WITH ±/- 0.1' WITH SUBGRADE TAKE OFFS IN ACCORDANCE WITH TYPICAL PAVING SECTIONS (12" CURB & 6" PAVING).
5. CONTRACTOR IS TO INSTALL ALL EROSION CONTROL MEASURES AS SHOWN ON THE EROSION AND SEDIMENTATION CONTROL PLAN PRIOR TO CONSTRUCTION. (COST TO BE INCLUDED IN BID ITEM FOR EROSION CONTROL.)
6. CONTRACTOR TO INSTALL GRAVEL WASH BED TO RUN EQUIPMENT THROUGH AND SHALL REMOVE ALL EXCESS DEBRIS FROM TRUCKS BEFORE LEAVING SITE. CLEAN ALL DEBRIS FROM PUBLIC RIGHT-OF-WAY IMMEDIATELY.
7. ANY REMOVAL OF TREES (AS APPROVED BY OWNER), FENCING OR DEBRIS WITHIN THE LIMITS OF SITE GRADING SHALL BE DISPOSED OF BY GRADING CONTRACTOR. (COST TO BE INCLUDED IN BID ITEM FOR TREE REMOVAL.)
8. CONTRACTOR IS RESPONSIBLE FOR SOIL PREPARATION UNDER PROPOSED BUILDING FOUNDATION PER GEOTECHNICAL REPORT.

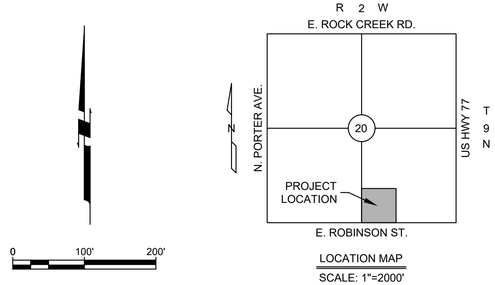

LOCATION MAP
SCALE: 1"=2000'

LEGEND

- PROPOSED ASPHALT PAVING
- PROPOSED CONCRETE PAVING

NOTE:
ALL CURB & GUTTER WITHIN SOCCER COMPLEX SHALL BE 6" BARRIER CURB & GUTTER (CITY OF NORMAN STANDARD).
ALL CURB & GUTTER IN RIGHT-OF-WAY SHALL MATCH EXISTING CURB & GUTTER ALONG ROBINSON STREET.

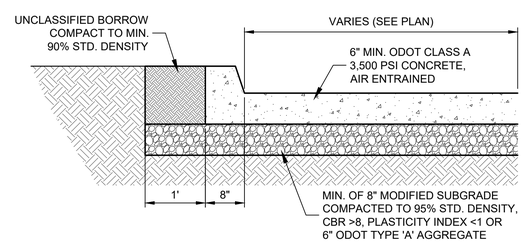

CONCRETE STREET SECTION

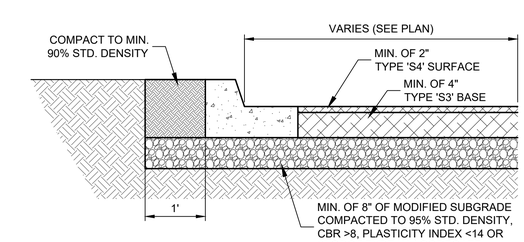

ASPHALT STREET SECTION

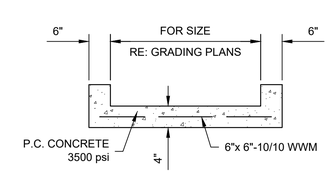

CONCRETE FLUME

NOT TO SCALE

NOTES:
1. DOWELS REQUIRED FOR PCC PAVING 8" THICK.
2. ASPHALT SURFACE SHALL BE 1/4" ABOVE EDGE OF CONCRETE GUTTER. THE GUTTER MAY BE REDUCED TO 5 3/4" TO ACCOMMODATE THIS REQUIREMENT.

ONE CALL UTILITY LOCATION NUMBER
840-5032
1-800-522-6543
This number is to be used for information on the location of all underground utilities. Contact this number and other numbers specified in the plans prior to any excavation.

PDG
PLANNING DESIGN GROUP
LANDSCAPE ARCHITECTURE • RECREATIONAL DESIGN • LAND PLANNING
5314 S. YALE AVE., SUITE 710, TULSA, OK 74135
918.628.1255 918.628.1256 FAX
WWW.PLANNINGDESIGNGROUP.COM

Johnson & Associates, Inc.
1 E. Sheridan Ave., Suite 200
Oklahoma City, OK 73104
(405) 235-8075 FAX (405) 235-8078 www.jaokc.com
Certificate of Authorization #1484 Exp. Date: 06-30-2019
ENGINEERS • SURVEYORS • PLANNERS

REGISTERED PROFESSIONAL ENGINEER
TIMOTHY JOHNSON
12247
OKLAHOMA

RENEWAL DATE: 04/30/2024

PROJECT INFORMATION

PROJECT ADDRESS:

1001 E. ROBINSON ST.,
NORMAN, OKLAHOMA 73071

PROJECT NO.	
DATE	
DRAWN BY	CHECKED BY

GRIFFIN SOCCER COMPLEX
PHASE 6
NORMAN, OKLAHOMA

ISSUE/ REVISIONS	
04/29/22	65% REVIEW SET
06/03/22	BID SET

OWNER:
THE CITY OF NORMAN PARKS & RECREATION
201-C WEST GRAY
NORMAN, OK 73069
(405) 366-5472

C3.0

PAVING PLAN

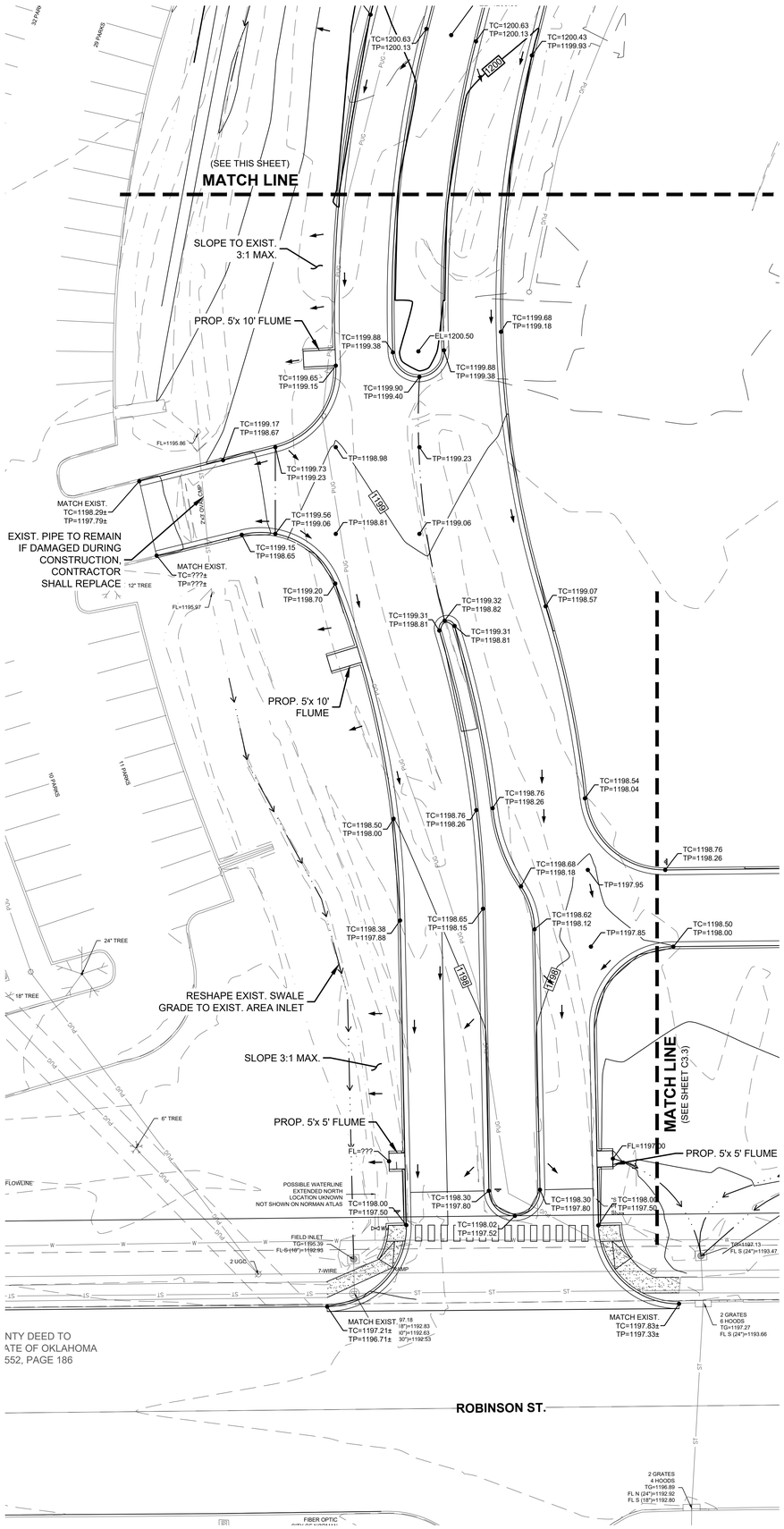

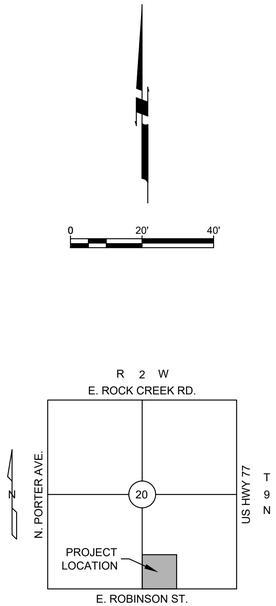

LOCATION MAP
SCALE: 1"=2000'

NOTE:
COORDINATE GRADING PLAN w/
LANDSCAPE SHEETS G-1 THROUGH G-6

LEGEND

TC=1200.00 TP=1200.00	PROPOSED TOP OF CURB ELEVATION PROPOSED TOP OF PAVEMENT ELEVATION
FL=1200.00	PROPOSED FLOW LINE ELEVATION
EL=1200.00	PROPOSED ELEVATION
	PROPOSED FLOW LINE
	PROPOSED RIDGE LINE
	DIRECTIONAL FLOW ARROW
1200	PROPOSED CONTOUR
1200	EXISTING CONTOUR

ONE CALL UTILITY LOCATION NUMBER
840-5032
1-800-522-6543
This number is to be used for information on the location of all underground utilities. Contact this number and other numbers specified in the plans prior to any excavation.

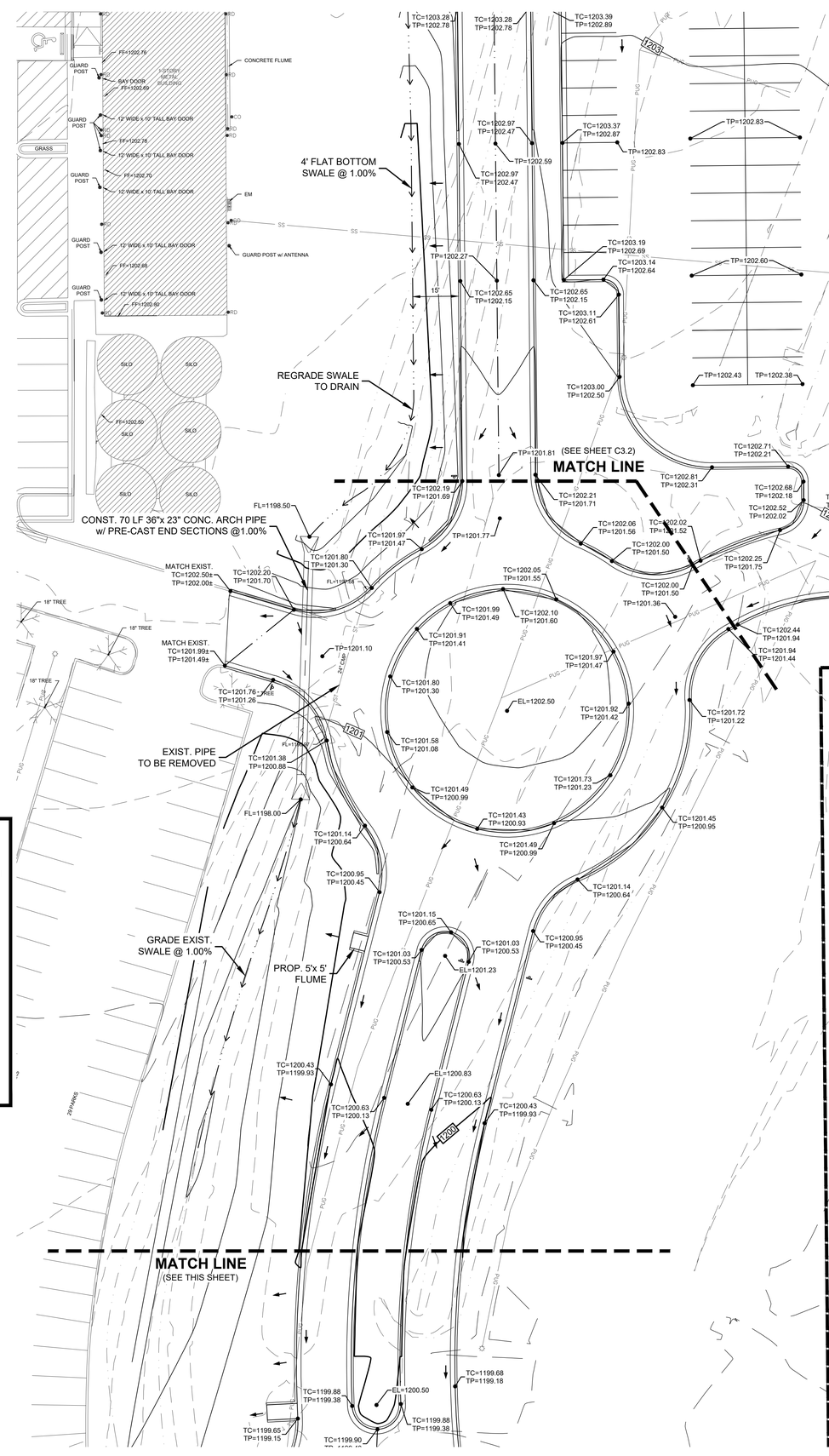

PDG
PLANNING DESIGN GROUP
LANDSCAPE ARCHITECTURE • RECREATIONAL DESIGN • LAND PLANNING
5314 S. YALE AVE., SUITE 710, TULSA, OK 74135
918.628.1255 918.628.1256 FAX
WWW.PLANNINGDESIGNGROUP.COM

J&A
Johnson & Associates, Inc.
1 E. Sheridan Ave., Suite 200
Oklahoma City, OK 73104
(405) 235-8075 FAX (405) 235-8078 www.jaokc.com
Certificate of Authorization #1484 Exp. Date: 06-30-2019
ENGINEERS • SURVEYORS • PLANNERS

REGISTERED PROFESSIONAL ENGINEER TIMOTHY JOHNSON 12277 OKLAHOMA

RENEWAL DATE: 04/30/2024

PROJECT INFORMATION	
PROJECT ADDRESS:	
1001 E. ROBINSON ST., NORMAN, OKLAHOMA 73071	
PROJECT NO.	
DATE	
DRAWN BY	CHECKED BY

GRIFFIN SOCCER COMPLEX PHASE 6 NORMAN, OKLAHOMA

ISSUE/ REVISIONS	
04/29/22	65% REVIEW SET
06/03/22	BID SET

OWNER:
THE CITY OF NORMAN PARKS & RECREATION
201-C WEST GRAY
NORMAN, OK 73069
(405) 366-5472

C3.1

GRADING PLAN

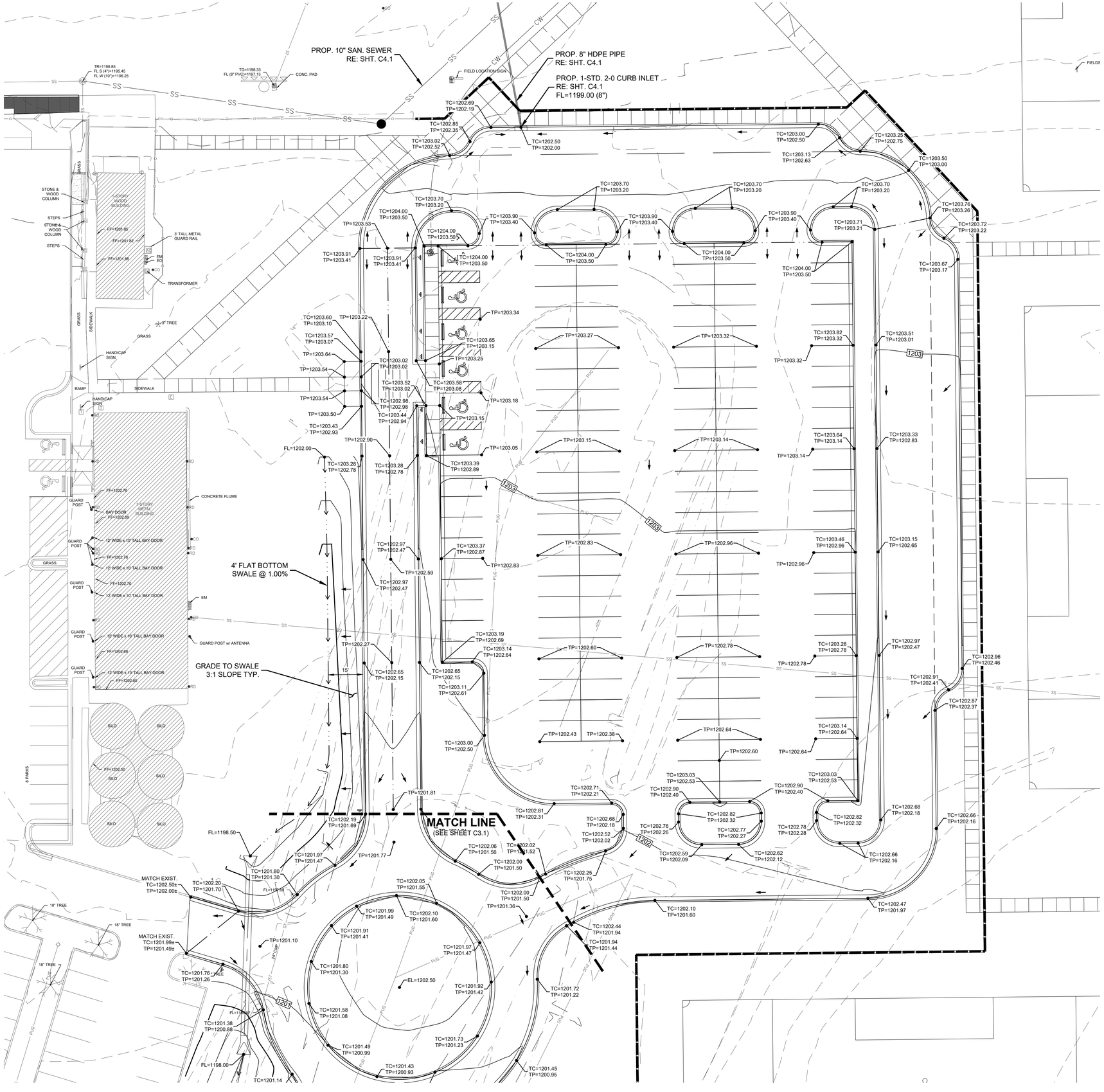

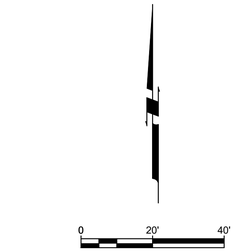

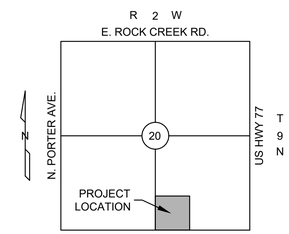

LOCATION MAP
SCALE: 1"=2000'

NOTE:
COORDINATE GRADING PLAN w/
LANDSCAPE SHEETS G-1 THROUGH G-6

LEGEND

TC=1200.00 / TP=1200.00	PROPOSED TOP OF CURB ELEVATION / PROPOSED TOP OF PAVEMENT ELEVATION
FL=1200.00	PROPOSED FLOW LINE ELEVATION
EL=1200.00	PROPOSED ELEVATION
	PROPOSED FLOW LINE
	PROPOSED RIDGE LINE
	DIRECTIONAL FLOW ARROW
1200	PROPOSED CONTOUR
1200	EXISTING CONTOUR

ONE CALL UTILITY LOCATION NUMBER
840-5032
1-800-522-6543
This number is to be used for information on the location of all underground utilities. Contact this number and other numbers specified in the plans prior to any excavation.

PDG
PLANNING DESIGN GROUP
LANDSCAPE ARCHITECTURE • RECREATIONAL DESIGN • LAND PLANNING
5314 S. YALE AVE., SUITE 710, TULSA, OK 74135
918.628.1255 918.628.1256 FAX
WWW.PLANNINGDESIGNGROUP.COM

J&A
Johnson & Associates, Inc.
1 E. Sheridan Ave., Suite 200
Oklahoma City, OK 73104
(405) 235-8075 FAX (405) 235-8078 www.jaokc.com
Certificate of Authorization #1484 Exp. Date: 06-30-2019
ENGINEERS • SURVEYORS • PLANNERS

REGISTERED PROFESSIONAL ENGINEER
TIMOTHY JOHNSON
12277
OKLAHOMA
RENEWAL DATE: 04/30/2024

PROJECT INFORMATION	
PROJECT ADDRESS:	
1001 E. ROBINSON ST., NORMAN, OKLAHOMA 73071	
PROJECT NO.	
DATE	
DRAWN BY	CHECKED BY

GRIFFIN SOCCER COMPLEX PHASE 6 NORMAN, OKLAHOMA

ISSUE/ REVISIONS	
04/29/22	65% REVIEW SET
06/03/22	BID SET

OWNER:
THE CITY OF NORMAN PARKS & RECREATION
201-C WEST GRAY
NORMAN, OK 73069
(405) 366-5472

C3.2

GRADING PLAN

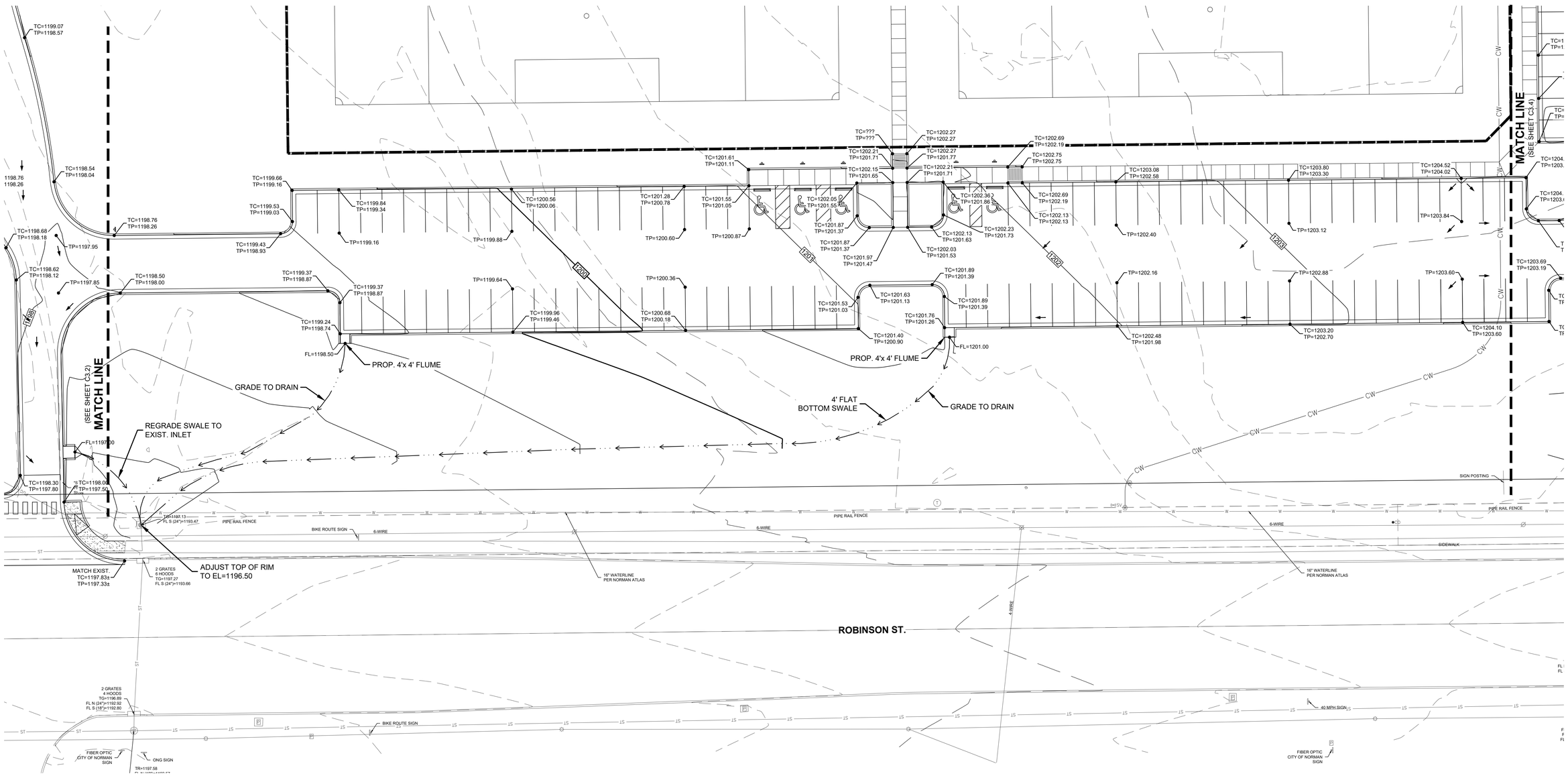

NOTE:
COORDINATE GRADING PLAN w/
LANDSCAPE SHEETS G-1 THROUGH G-6

LEGEND

TC=1200.00 TP=1200.00	PROPOSED TOP OF CURB ELEVATION PROPOSED TOP OF PAVEMENT ELEVATION
FL=1200.00	PROPOSED FLOW LINE ELEVATION
EL=1200.00	PROPOSED ELEVATION
	PROPOSED FLOW LINE
	PROPOSED RIDGE LINE
	DIRECTIONAL FLOW ARROW
1200	PROPOSED CONTOUR
1200	EXISTING CONTOUR

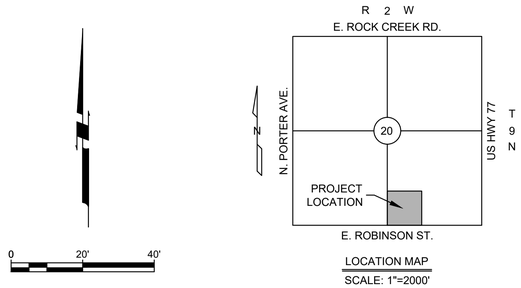

LOCATION MAP
SCALE: 1"=2000'

ONE CALL UTILITY LOCATION NUMBER
840-5032
1-800-522-6543
This number is to be used for information on the location of all underground utilities. Contact this number and other numbers specified in the plans prior to any excavation.

PDG
PLANNING DESIGN GROUP
LANDSCAPE ARCHITECTURE ■ RECREATIONAL DESIGN ■ LAND PLANNING
5314 S. YALE AVE., SUITE 710, TULSA, OK 74135
918.628.1255 918.628.1256 FAX
WWW.PLANNINGDESIGNGROUP.COM

J&A
Johnson & Associates, Inc.
1 E. Sheridan Ave., Suite 200
Oklahoma City, OK 73104
(405) 235-8075 FAX (405) 235-8078 www.jaokc.com
Certificate of Authorization #1484 Exp. Date: 06-30-2019
ENGINEERS • SURVEYORS • PLANNERS

REGISTERED PROFESSIONAL ENGINEER
TIMOTHY JOHNSON
12277
OKLAHOMA

RENEWAL DATE: 04/30/2024

PROJECT INFORMATION

PROJECT ADDRESS:

1001 E. ROBINSON ST.,
NORMAN, OKLAHOMA 73071

PROJECT NO.	
DATE	
DRAWN BY	CHECKED BY

GRIFFIN SOCCER COMPLEX
PHASE 6
NORMAN, OKLAHOMA

ISSUE/ REVISIONS

04/29/22	65% REVIEW SET
06/03/22	BID SET

OWNER:

THE CITY OF NORMAN PARKS & RECREATION
201-C WEST GRAY
NORMAN, OK 73069
(405) 366-5472

C3.3

GRADING PLAN

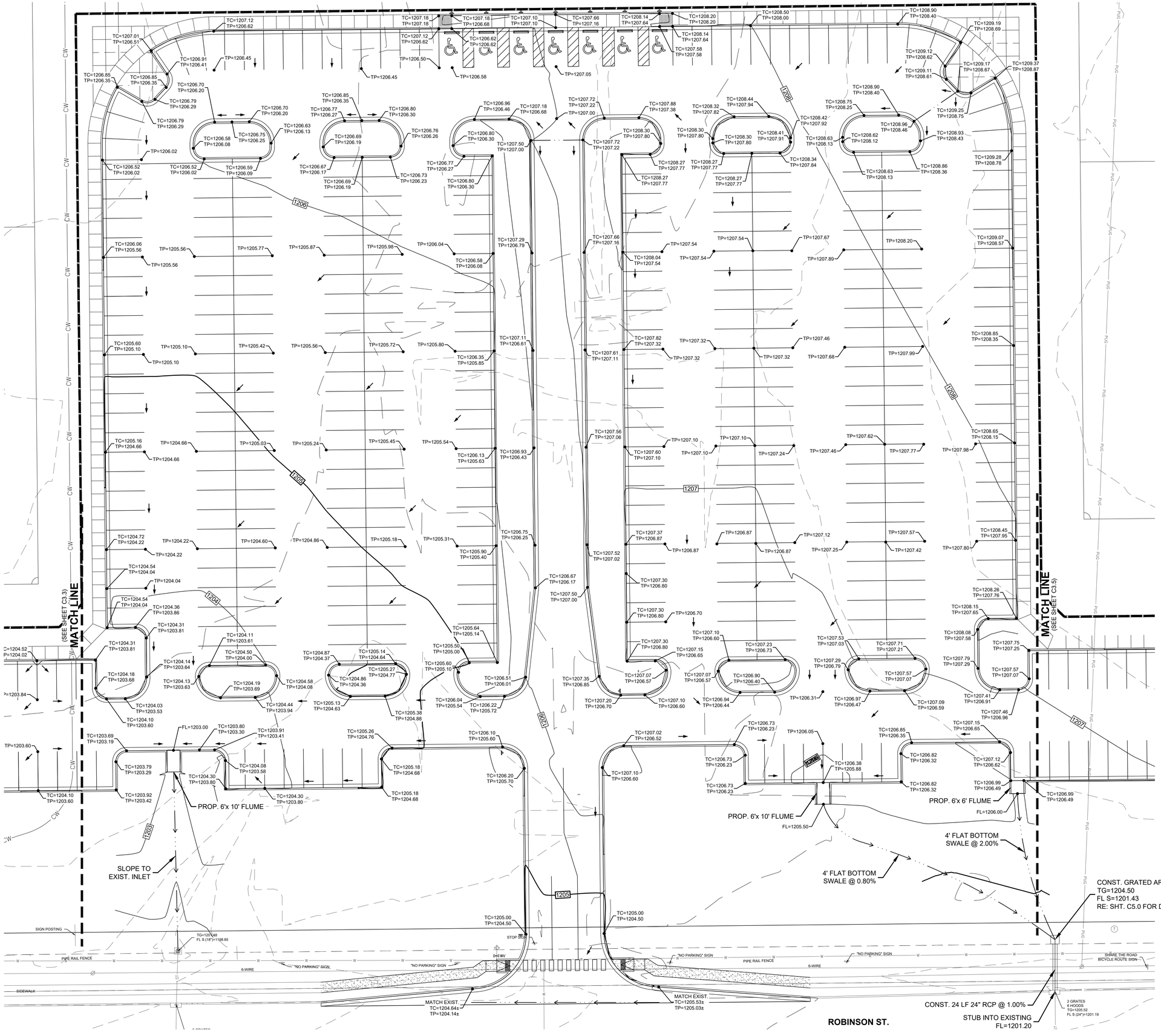

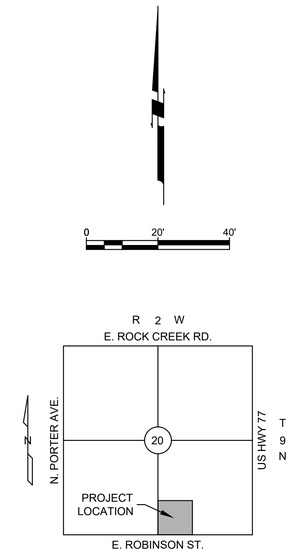

LOCATION MAP

SCALE: 1"=2000'

NOTE:
COORDINATE GRADING PLAN w/
LANDSCAPE SHEETS G-1 THROUGH G-6

LEGEND

TC=1200.00 / TP=1200.00	PROPOSED TOP OF CURB ELEVATION / PROPOSED TOP OF PAVEMENT ELEVATION
FL=1200.00	PROPOSED FLOW LINE ELEVATION
EL=1200.00	PROPOSED ELEVATION
	PROPOSED FLOW LINE
	PROPOSED RIDGE LINE
	DIRECTIONAL FLOW ARROW
1200	PROPOSED CONTOUR
1200	EXISTING CONTOUR

ONE CALL UTILITY LOCATION NUMBER

840-5032

1-800-522-6543

This number is to be used for information on the location of all underground utilities. Contact this number and other numbers specified in the plans prior to any excavation.

PDG
PLANNING DESIGN GROUP
LANDSCAPE ARCHITECTURE • RECREATIONAL DESIGN • LAND PLANNING
5314 S. YALE AVE., SUITE 710, TULSA, OK 74135
918.628.1255 918.628.1256 FAX
WWW.PLANNINGDESIGNGROUP.COM

J&A
Johnson & Associates, Inc.
1 E. Sheridan Ave., Suite 200
Oklahoma City, OK 73104
(405) 235-8075 FAX (405) 235-8078 www.jaokc.com
Certificate of Authorization #1484 Exp. Date: 06-30-2019
ENGINEERS • SURVEYORS • PLANNERS

REGISTERED PROFESSIONAL ENGINEER
TIMOTHY JOHNSON
12277
OKLAHOMA

RENEWAL DATE: 04/30/2024

PROJECT INFORMATION	
PROJECT ADDRESS:	
1001 E. ROBINSON ST., NORMAN, OKLAHOMA 73071	
PROJECT NO.	
DATE	
DRAWN BY	CHECKED BY

GRIFFIN SOCCER COMPLEX PHASE 6 NORMAN, OKLAHOMA

ISSUE/ REVISIONS	
04/29/22	65% REVIEW SET
06/03/22	BID SET

OWNER:

THE CITY OF NORMAN PARKS & RECREATION
201-C WEST GRAY
NORMAN, OK 73069
(405) 366-5472

C3.4

GRADING PLAN

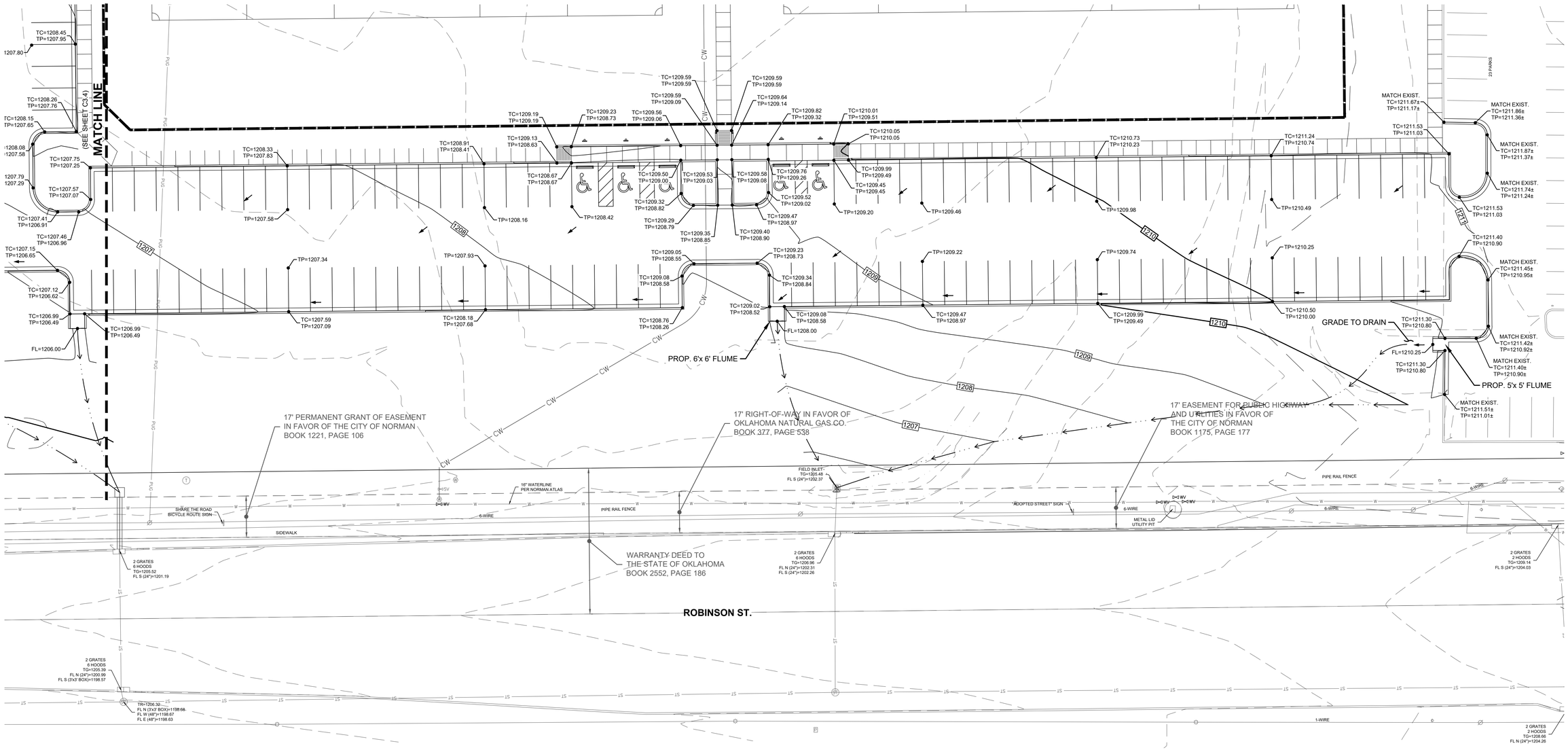

NOTE:
COORDINATE GRADING PLAN w/
LANDSCAPE SHEETS G-1 THROUGH G-6

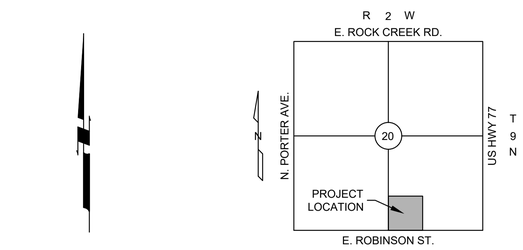

LOCATION MAP
SCALE: 1"=2000'

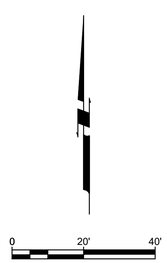

LEGEND

TC=1200.00 TP=1200.00	PROPOSED TOP OF CURB ELEVATION PROPOSED TOP OF PAVEMENT ELEVATION
FL=1200.00	PROPOSED FLOW LINE ELEVATION
EL=1200.00	PROPOSED ELEVATION
	PROPOSED FLOW LINE
	PROPOSED RIDGE LINE
	DIRECTIONAL FLOW ARROW
1200	PROPOSED CONTOUR
1200	EXISTING CONTOUR

ONE CALL UTILITY LOCATION NUMBER
840-5032
1-800-522-6543
This number is to be used for information on the location of all underground utilities. Contact this number and other numbers specified in the plans prior to any excavation.

PDG
PLANNING DESIGN GROUP
LANDSCAPE ARCHITECTURE • RECREATIONAL DESIGN • LAND PLANNING
5314 S. YALE AVE., SUITE 710, TULSA, OK 74135
918.628.1255 918.628.1256 FAX
WWW.PLANNINGDESIGNGROUP.COM

Johnson & Associates, Inc.
1 E. Sheridan Ave., Suite 200
Oklahoma City, OK 73104
(405) 235-8075 FAX (405) 235-8078 www.jaokc.com
Certificate of Authorization #1484 Exp. Date: 06-30-2019
ENGINEERS • SURVEYORS • PLANNERS

REGISTERED PROFESSIONAL ENGINEER
TIMOTHY N. JOHNSON
12277
OKLAHOMA
RENEWAL DATE: 04/30/2024

PROJECT INFORMATION

PROJECT ADDRESS:

1001 E. ROBINSON ST.,
NORMAN, OKLAHOMA 73071

PROJECT NO.	
DATE	
DRAWN BY	CHECKED BY

GRIFFIN SOCCER COMPLEX
PHASE 6
NORMAN, OKLAHOMA

ISSUE/ REVISIONS

04/29/22	65% REVIEW SET
06/03/22	BID SET

OWNER:

THE CITY OF NORMAN PARKS & RECREATION
201-C WEST GRAY
NORMAN, OK 73069
(405) 366-5472

C3.5

GRADING PLAN

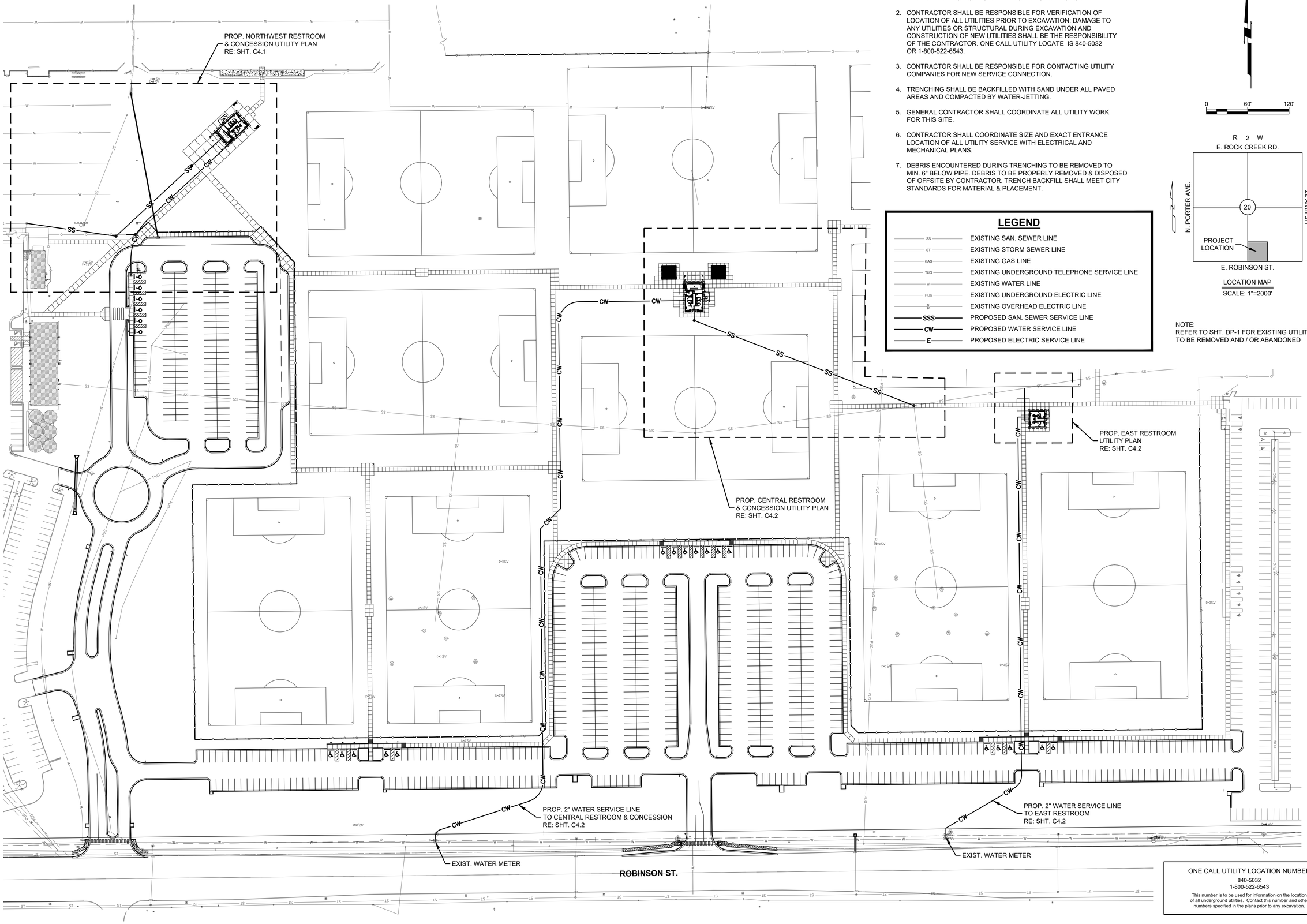

GENERAL NOTES - UTILITIES

1. ALL UTILITY WORK SHALL COMPLY WITH CITY OF NORMAN STANDARD SPECIFICATIONS AND BUILDING INSPECTIONS.
2. CONTRACTOR SHALL BE RESPONSIBLE FOR VERIFICATION OF LOCATION OF ALL UTILITIES PRIOR TO EXCAVATION: DAMAGE TO ANY UTILITIES OR STRUCTURAL DURING EXCAVATION AND CONSTRUCTION OF NEW UTILITIES SHALL BE THE RESPONSIBILITY OF THE CONTRACTOR. ONE CALL UTILITY LOCATE IS 840-5032 OR 1-800-522-6543.
3. CONTRACTOR SHALL BE RESPONSIBLE FOR CONTACTING UTILITY COMPANIES FOR NEW SERVICE CONNECTION.
4. TRENCHING SHALL BE BACKFILLED WITH SAND UNDER ALL PAVED AREAS AND COMPACTED BY WATER-JETTING.
5. GENERAL CONTRACTOR SHALL COORDINATE ALL UTILITY WORK FOR THIS SITE.
6. CONTRACTOR SHALL COORDINATE SIZE AND EXACT ENTRANCE LOCATION OF ALL UTILITY SERVICE WITH ELECTRICAL AND MECHANICAL PLANS.
7. DEBRIS ENCOUNTERED DURING TRENCHING TO BE REMOVED TO MIN. 6" BELOW PIPE. DEBRIS TO BE PROPERLY REMOVED & DISPOSED OF OFFSITE BY CONTRACTOR. TRENCH BACKFILL SHALL MEET CITY STANDARDS FOR MATERIAL & PLACEMENT.

LEGEND

SS	EXISTING SAN. SEWER LINE
ST	EXISTING STORM SEWER LINE
GAS	EXISTING GAS LINE
TUG	EXISTING UNDERGROUND TELEPHONE SERVICE LINE
W	EXISTING WATER LINE
PUG	EXISTING UNDERGROUND ELECTRIC LINE
	EXISTING OVERHEAD ELECTRIC LINE
SSS	PROPOSED SAN. SEWER SERVICE LINE
CW	PROPOSED WATER SERVICE LINE
E	PROPOSED ELECTRIC SERVICE LINE

0 60' 120'

R 2 W
E. ROCK CREEK RD.
N. PORTER AVE.
20
US HWY 77
T 9 N
PROJECT LOCATION
E. ROBINSON ST.

LOCATION MAP
SCALE: 1"=2000'

NOTE:
REFER TO SHT. DP-1 FOR EXISTING UTILITIES TO BE REMOVED AND / OR ABANDONED

ONE CALL UTILITY LOCATION NUMBER
840-5032
1-800-522-6543
This number is to be used for information on the location of all underground utilities. Contact this number and other numbers specified in the plans prior to any excavation.

PDG
PLANNING DESIGN GROUP
LANDSCAPE ARCHITECTURE • RECREATIONAL DESIGN • LAND PLANNING
5314 S. YALE AVE., SUITE 710, TULSA, OK 74135
918.628.1255 918.628.1256 FAX
WWW.PLANNINGDESIGNGROUP.COM

J&A
Johnson & Associates, Inc.
1 E. Sheridan Ave., Suite 200
Oklahoma City, OK 73104
(405) 235-8075 FAX (405) 235-8078 www.jaokc.com
Certificate of Authorization #1484 Exp. Date: 06-30-2019
ENGINEERS • SURVEYORS • PLANNERS

REGISTERED PROFESSIONAL ENGINEER
TIMOTHY JOHNSON
12277
STATE OF OKLAHOMA
RENEWAL DATE: 04/30/2024

PROJECT INFORMATION

PROJECT ADDRESS:

1001 E. ROBINSON ST.,
NORMAN, OKLAHOMA 73071

PROJECT NO.	
DATE	
DRAWN BY	CHECKED BY

GRIFFIN SOCCER COMPLEX PHASE 6 NORMAN, OKLAHOMA

ISSUE/ REVISIONS

04/29/22	65% REVIEW SET
06/03/22	BID SET

OWNER:
THE CITY OF NORMAN PARKS & RECREATION
201-C WEST GRAY
NORMAN, OK 73069
(405) 366-5472

C4.0

UTILITY PLAN

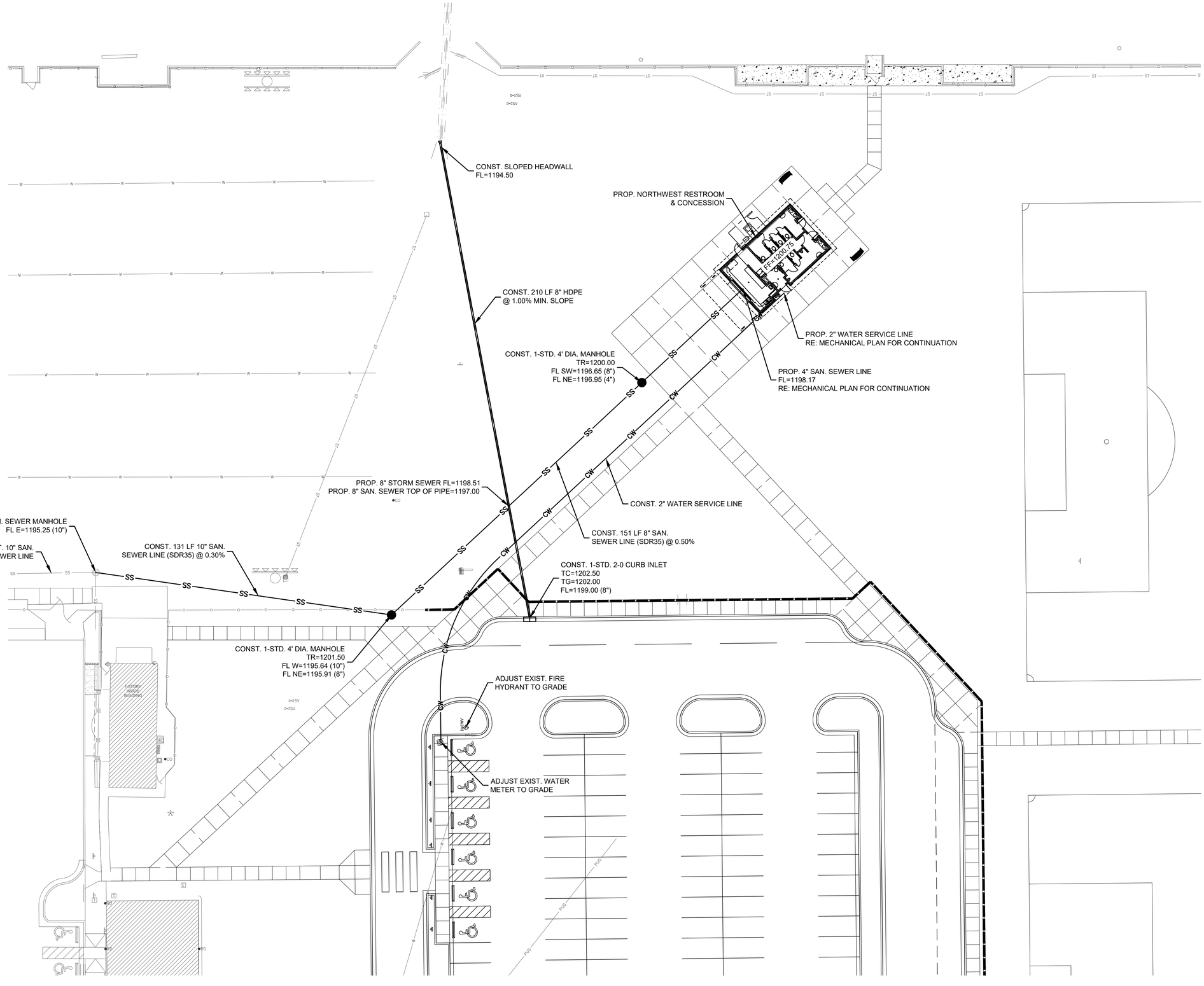

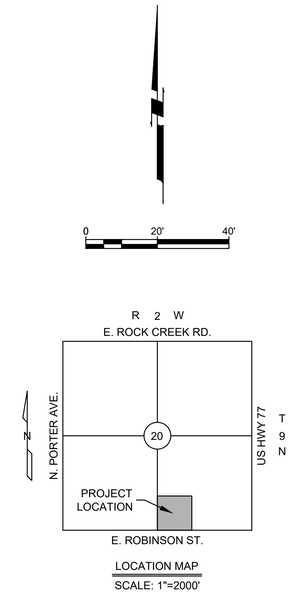

LOCATION MAP
SCALE: 1"=2000'

ONE CALL UTILITY LOCATION NUMBER
840-5032
1-800-522-6543
This number is to be used for information on the location of all underground utilities. Contact this number and other numbers specified in the plans prior to any excavation.

PDG
PLANNING DESIGN GROUP
LANDSCAPE ARCHITECTURE ■
RECREATIONAL DESIGN ■ LAND PLANNING
5314 S. YALE AVE., SUITE 710, TULSA, OK 74135
918.628.1255 918.628.1256 FAX
WWW.PLANNINGDESIGNGROUP.COM

Johnson & Associates, Inc.
1 E. Sheridan Ave., Suite 200
Oklahoma City, OK 73104
(405) 235-8075 FAX (405) 235-8078 www.jaokc.com
Certificate of Authorization #1484 Exp. Date: 06-30-2019
ENGINEERS • SURVEYORS • PLANNERS

REGISTERED PROFESSIONAL ENGINEER
TIMOTHY JOHNSON
12277
OKLAHOMA

RENEWAL DATE: 04/30/2024

PROJECT INFORMATION	
PROJECT ADDRESS:	
1001 E. ROBINSON ST., NORMAN, OKLAHOMA 73071	
PROJECT NO.	
DATE	
DRAWN BY	CHECKED BY

GRIFFIN SOCCER COMPLEX PHASE 6 NORMAN, OKLAHOMA

ISSUE/ REVISIONS	
04/29/22	65% REVIEW SET
06/03/22	BID SET

OWNER:
THE CITY OF NORMAN PARKS & RECREATION
201-C WEST GRAY
NORMAN, OK 73069
(405) 366-5472

C4.1

UTILITY PLAN

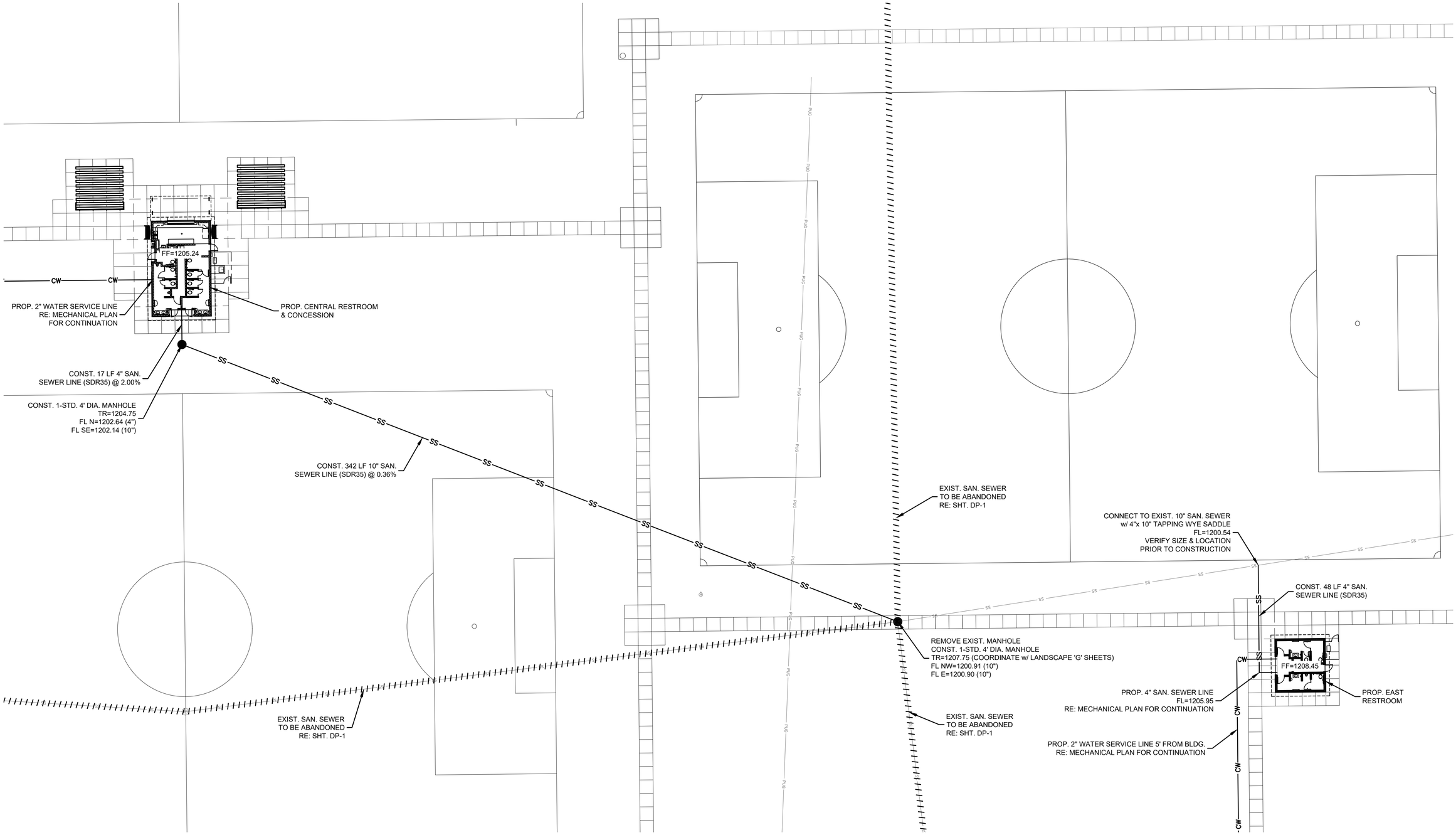

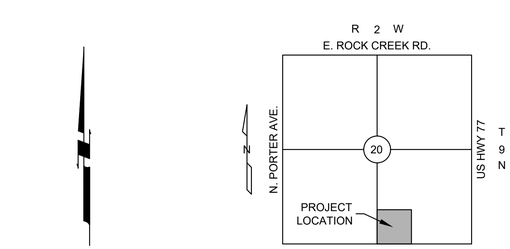

LOCATION MAP
SCALE: 1"=2000'

0 20' 40'

ONE CALL UTILITY LOCATION NUMBER
840-5032
1-800-522-6543
This number is to be used for information on the location of all underground utilities. Contact this number and other numbers specified in the plans prior to any excavation.

PDG
PLANNING DESIGN GROUP
LANDSCAPE ARCHITECTURE ■
RECREATIONAL DESIGN ■ LAND PLANNING
5314 S. YALE AVE., SUITE 710, TULSA, OK 74135
918.628.1255 918.628.1256 FAX
WWW.PLANNINGDESIGNGROUP.COM

J&A
Johnson & Associates, Inc.
1 E. Sheridan Ave., Suite 200
Oklahoma City, OK 73104
(405) 235-8075 FAX (405) 235-8078 www.jaokc.com
Certificate of Authorization #1484 Exp. Date: 06-30-2019
ENGINEERS • SURVEYORS • PLANNERS

REGISTERED PROFESSIONAL ENGINEER
TIMOTHY JOHNSON
12277
OKLAHOMA

RENEWAL DATE: 04/30/2024

PROJECT INFORMATION

PROJECT ADDRESS:

1001 E. ROBINSON ST.,
NORMAN, OKLAHOMA 73071

PROJECT NO.	
DATE	
DRAWN BY	CHECKED BY

GRIFFIN SOCCER COMPLEX PHASE 6 NORMAN, OKLAHOMA

ISSUE/ REVISIONS	
04/29/22	65% REVIEW SET
06/03/22	BID SET

OWNER:

THE CITY OF NORMAN PARKS & RECREATION
201-C WEST GRAY
NORMAN, OK 73069
(405) 366-5472

C4.2

UTILITY PLAN

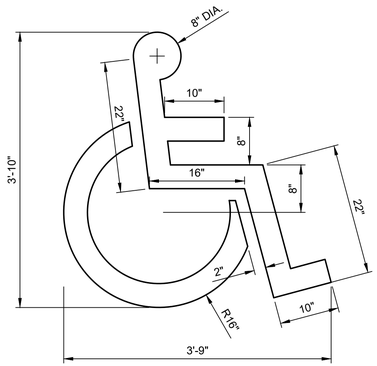

HANDICAP PAVEMENT MARKING DETAIL

SCALE: N.T.S.

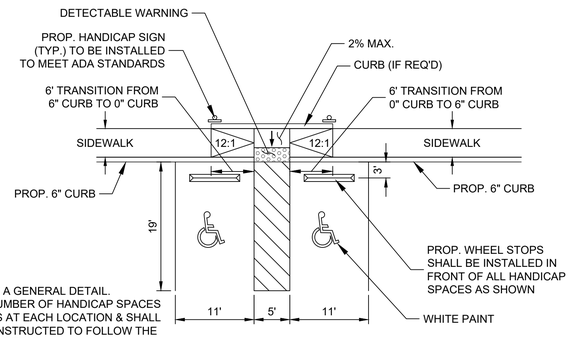

NOTE: THIS IS A GENERAL DETAIL. THE NUMBER OF HANDICAP SPACES VARIES AT EACH LOCATION & SHALL BE CONSTRUCTED TO FOLLOW THE ABOVE DETAIL

H.C. PARKING w/ SIDEWALK RAMP DETAILS

SCALE: 1"=10'

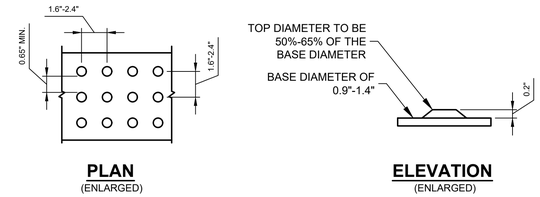

PLAN
(ENLARGED)

ELEVATION
(ENLARGED)

DETECTABLE WARNING SURFACE SPECIFICATIONS:

- MUST PROVIDE A VISUAL CONTRAST.
- RAISED TACTILE SURFACES USED FOR WAY FINDING.
- DETECTABLE WARNING SURFACE SHALL BE INSTALLED IN A MANNER SUCH THAT THE DOMES ARE PARALLEL TO THE DIRECTION OF PEDESTRIAN TRAVEL.
- INSTALL THE DETECTABLE WARNING SURFACE BEGINNING AT BACK OF CURB.

DETECTABLE WARNING SURFACE PATTERN LAYOUT

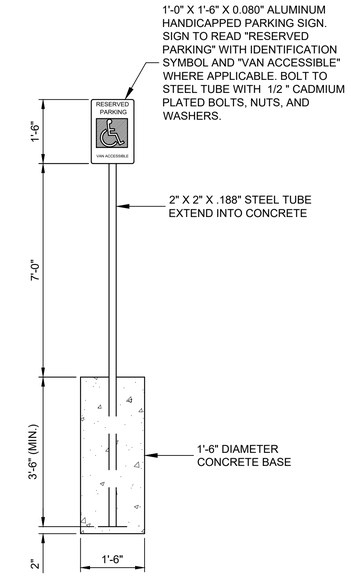

HANDICAP PARKING SIGN

SCALE: NTS

SIGN LEGEND

R1-1
36"x 36"

R3-5 LEFT
15"x 18"

R3-5 RIGHT
15"x 18"

R5-1
36"x 36"

R3-5a
15"x 18"

NOTE:
INSTALL POST FOR TRAFFIC SIGNS PER CITY OF NORMAN STANDARDS & SPECIFICATIONS.

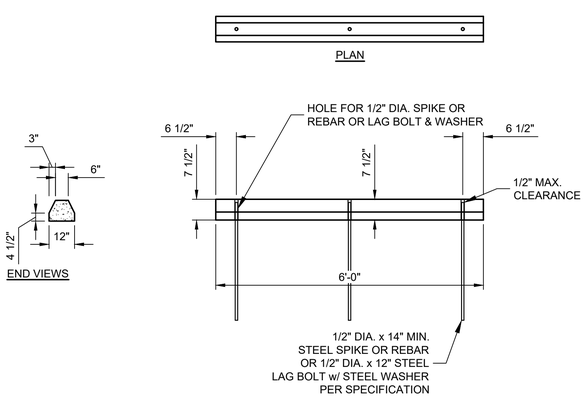

NOTES:

1. RECYCLED RUBBER WHEEL STOPS AT HANDICAP PARKING SPACES TO BE BLACK w/ HANDICAP BLUE REFLECTIVE STRIPES.
2. RECYCLED RUBBER WHEEL STOPS AT STANDARD PARKING PACES TO BE BLACK w/ WHITE REFLECTIVE STRIPES.

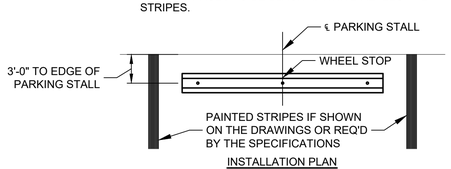

INSTALLATION PLAN

PREFAB RECYCLED RUBBER WHEEL STOP DETAILS

SCALE: N.T.S.

SYMBOL LEGEND

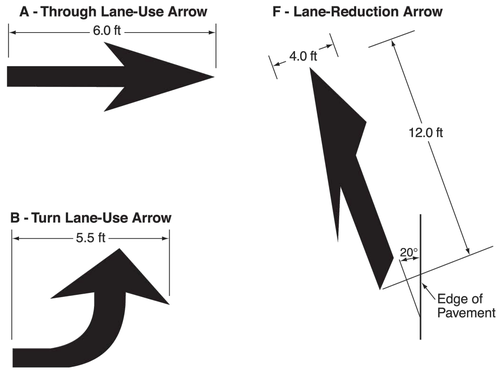

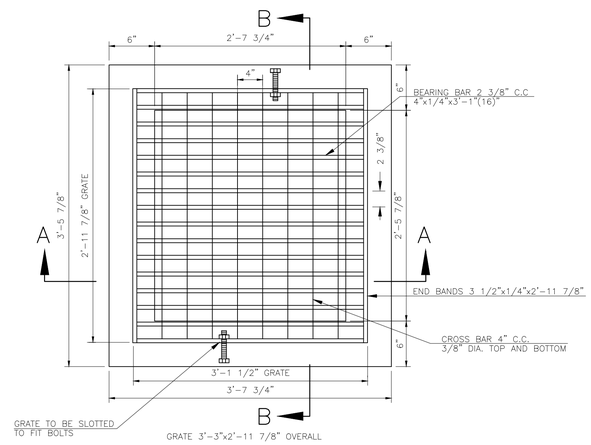

16 BEARING BARS 4"x1/4"x3'-2 1/2" LONG SPACED AT 2 3/8" C.C. OVERALL DIMENSIONS 3'-3"x2' 11 7/8" ARRANGED WITH 4"x1/4" BEARING BARS 3'-2 1/2" LONG WITH END BANDING 3 1/2"x1/4" END BANDS 2' 11 7/8" LONG & 3/8" CROSS BARS TOP AND BOTTOM, 4" C/C SPACED AS SHOWN.

IKG INDUSTRIES IRVING HEAVY-WELD STEEL GRATING TYPE HE

PLAN

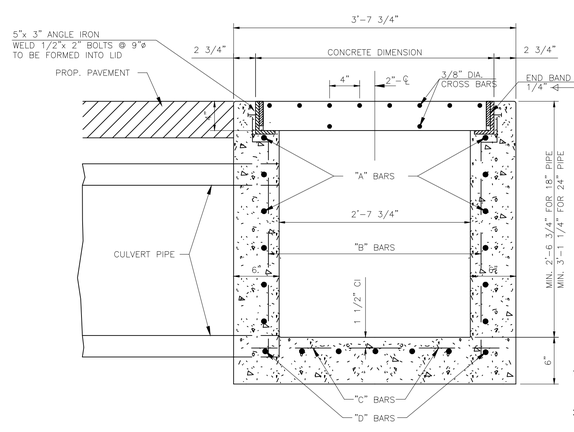

SECTION "A-A"

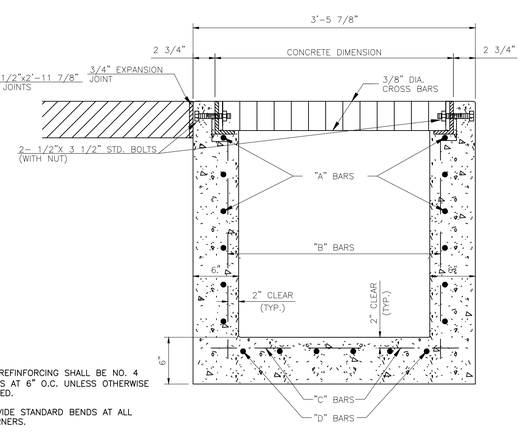

SECTION "B-B"

1. ALL REFINFORCING SHALL BE NO. 4 BARS AT 6" O.C. UNLESS OTHERWISE NOTED.
2. PROVIDE STANDARD BENDS AT ALL CORNERS.

NOTE:
BACKFILL AROUND INLET BOX SHALL BE 5/8" CRUSHER RUN GRAVEL AND WATER JETTED FOR COMPACTION.

GRATED INLET DETAIL

PDG
PLANNING DESIGN GROUP
LANDSCAPE ARCHITECTURE • RECREATIONAL DESIGN • LAND PLANNING
5314 S. YALE AVE., SUITE 710, TULSA, OK 74135
918.628.1255 918.628.1256 FAX
WWW.PLANNINGDESIGNGROUP.COM

Johnson & Associates, Inc.
1 E. Sheridan Ave., Suite 200
Oklahoma City, OK 73104
(405) 235-8075 FAX (405) 235-8078 www.jaokc.com
Certificate of Authorization #1484 Exp. Date: 06-30-2019
ENGINEERS • SURVEYORS • PLANNERS

REGISTERED PROFESSIONAL ENGINEER TIMOTHY JOHNSON 12277 OKLAHOMA
RENEWAL DATE: 04/30/2024

PROJECT INFORMATION

PROJECT ADDRESS:

1001 E. ROBINSON ST.,
NORMAN, OKLAHOMA 73071

PROJECT NO.	
DATE	
DRAWN BY	CHECKED BY

GRIFFIN SOCCER COMPLEX PHASE 6 NORMAN, OKLAHOMA

ISSUE/ REVISIONS	
04/29/22	65% REVIEW SET
06/03/22	BID SET

OWNER:

THE CITY OF NORMAN PARKS & RECREATION
201-C WEST GRAY
NORMAN, OK 73069
(405) 366-5472

C5.0

DETAILS

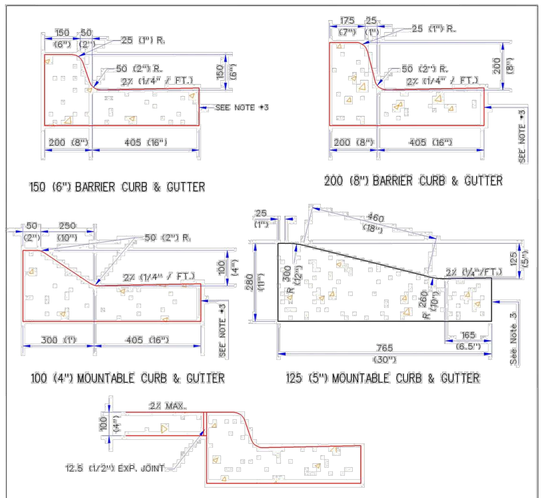

NOTES:
1. SEE ODOT STANDARD (SCD) FOR JOINT DETAILS.
2. #4 TIE BARS 750 (2'-6") LONG REQUIRED AT 450 (18") CENTERS WITH TONGUE AND GROOVE JOINT IF CURB AND GUTTER NOT CAST INTEGRALLY WITH STREET PAVING. LONGITUDINAL CONSTRUCTION JOINTS ON LOCAL AND COLLECTOR STREET MAY, AT THE OPTION OF THE DESIGN ENGINEER, BE BUTT TYPE JOINTS WITH TIEBARS OR KEYWAY TYPE JOINT WITHOUT TIEBARS.
3. 150 (6") MIN. WHEN CURB & GUTTER IS POURED SEPARATELY IF CURB & GUTTER IS POURED MONOLITHICLY WITH THE CONCRETE STREET PAVEMENT, THE GUTTER THICKNESS SHALL BE SAME AS THE APPROVED CONCRETE STREET PAVEMENT THICKNESS. USE 13 (1/2 ") DIA DOWELS 450 (18") LONG AT 610 (24") CENTERS (SMOOTH OR DEFORMED) TO TIE CURB TO CONCRETE STREET PAVEMENT.
4. FOR ARTERIAL (URBAN) STREET SECTIONS, THE GUTTER CROSS-SLOPE SHALL BE 3%.

METRIC UNITS ARE IN MM WITH ENGLISH UNITS IN PARENTHESIS, UNLESS INDICATED OTHERWISE.

CURB AND GUTTER

City Engineer Approval:		CITY OF NORMAN, OKLAHOMA	
Approval Date:	Revision Date: 1-31-2003	Rev. No. 3	DRAWING NO. ST 11

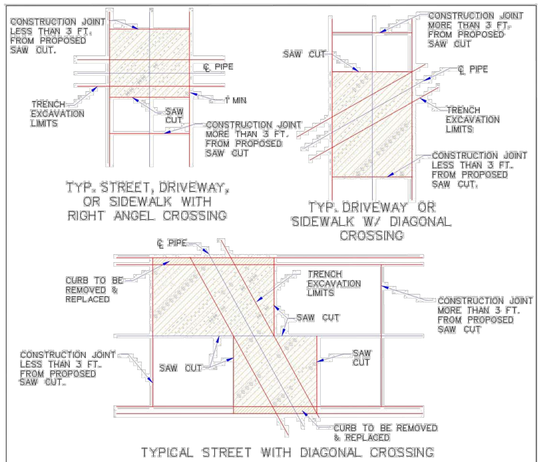

NOTES:
1. REMOVE AND REPLACE PAVEMENT WITHIN SHADED AREA BOUNDED BY SAW CUTS AND/OR CONSTRUCTION JOINTS.
2. FOR DIAGONAL CROSSING, REPLACE PAVEMENT USING SQUARED CUTS, AS SHOWN. PAY QUANTITY WILL INCLUDED SQUARED AREA.
3. REMOVE AND REPLACE PAVEMENT TO CONSTRUCTION JOINT IF LESS THAN 3 FT. FROM PROPOSED SAW CUT. EXTRA AREA WILL BE INCLUDED IN PAY QUANTITY.
4. FOR LONGITUDINAL INSTALLATIONS: REMOVE AND REPLACE PAVEMENT AND CURB TO EDGE OF STREET, IF THE SAW CUT IS LESS THAN 3 FT. FROM THE OUTSIDE EDGE OF THE PAVEMENT OR CURB. AVOID SAW CUTS IN THE EXISTING WHEEL LINE. TRENCHES EXCEEDING 300 L.F. SHALL BE BACKFILLED AND MADE DRIVEABLE.
5. ALL CONSTRUCTION JOINTS SHALL BE REESTABLISHED IN ACCORDANCED WITH THE CITY OF NORMAN STANDARDS FOR PORTLAND CEMENT CONCRETE PAVEMENT, WHEN A PAVEMENT SECTION IS REMOVED ALONG AN EXISTING LONGITUDINAL CONSTRUCTION JOINT, THE NEW PAVEMENT SHALL BE DOWELLED TO THE PAVEMENT ADJACENT TO THE JOINT.

STANDARD PAVEMENT CUTS

City Engineer Approval:		CITY OF NORMAN, OKLAHOMA	
Approval Date:	Revision Date: 5-24-99	Rev. No. 1	DRAWING NO. ST 20

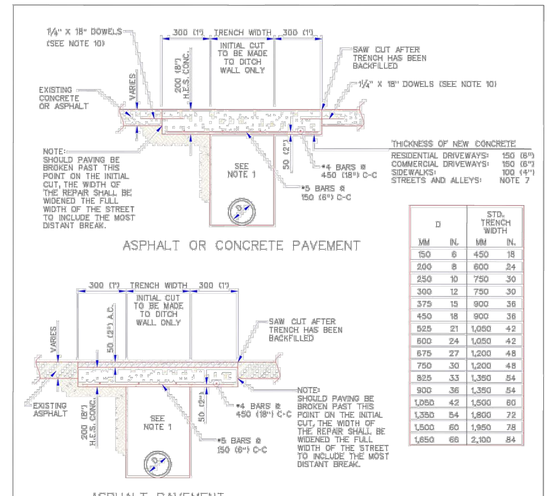

D		STD. TRENCH WIDTH	
MM	IN.	MM	IN.
150	6	450	18
200	8	600	24
250	10	750	30
300	12	750	30
375	15	900	36
450	18	900	36
525	21	1,050	42
600	24	1,050	42
675	27	1,200	48
750	30	1,200	48
825	33	1,350	54
900	36	1,350	54
1,050	42	1,500	60
1,350	54	1,800	72
1,500	60	1,950	78
1,650	66	2,100	84

GENERAL NOTES:
1. ALL PUBLIC ROADS AND DRIVE CROSSINGS ARE TO BE BACKFILLED WITH ODOT 703.01 TYPE A AGGREGATE BASE OR FLOWABLE FILL.
2. REMOVE AND REPLACE PAVEMENT TO NEAREST JOINT IF PROPOSED SAW CUT IS LESS THAN 900 MM (3') FROM JOINT.
3. NO PAYMENT WILL BE MADE FOR REPLACEMENT OF PAVEMENT OUTSIDE OF STD. PAY WIDTH DUE TO TRENCH EXCAVATION WIDER THAN STANDARD TRENCH WIDTH.
4. PAY QUANTITY WILL INCLUDE REPLACEMENT OF PAVEMENT DUE TO SQUARING OF DIAGONAL CUTS.
5. FOR SERVICE LINES 50 MM (2") AND SMALLER, THE STD. PAY WIDTH SHALL BE 650 MM (2.2').
6. WHERE TRENCH EXCAVATION IS WITHIN 300 MM (12") OF BACK OF CURB STANDARD NO. GC-02 SHALL APPLY.
7. NEW PCC TO BE 2" THICKER THAN EXISTING PAVING, 8" MINIMUM.
8. CONCRETE SHALL BE 3500 PSI HIGH EARLY STRENTH CONCRETE PER ODOT 701.01(A).
9. CITY ENGINEER SHALL DECIDE WHICH TYPE OF REPAIR TO MAKE.
10. 1¼" DIA. BY 18" LONG DOWELS SPACED AT 12" CENTERS ARE REQUIRED IF ADJACENT PAVEMENT IS CONCRETE.

METRIC UNITS ARE IN MM WITH ENGLISH UNITS IN PARENTHESIS, UNLESS INDICATED OTHERWISE.

PAVEMENT REMOVAL AND REPLACEMENT

City Engineer Approval:		CITY OF NORMAN, OKLAHOMA	
Approval Date:	Revision Date: 2-08-2006	Rev. No. 2	DRAWING NO. ST 21

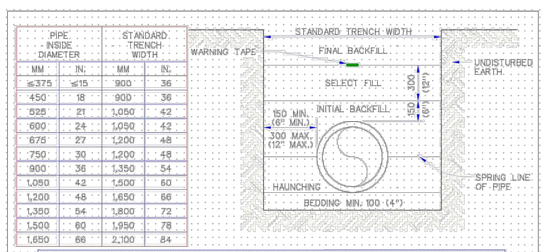

PIPE INSIDE DIAMETER		STANDARD TRENCH WIDTH	
MM	IN.	MM	IN.
≤375	≤15	900	36
450	18	900	36
525	21	1,050	42
600	24	1,050	42
675	27	1,200	48
750	30	1,200	48
900	36	1,350	54
1,050	42	1,500	60
1,200	48	1,650	66
1,350	54	1,800	72
1,500	60	1,950	78
1,650	66	2,100	84

BEDDING MATERIALS

BACKFILL DESCRIPTION	NON-PAVED AREAS			PAVED AREAS (See Note 7)		
	PVC	DIP	HDPE	PVC	DIP	HDPE
FINAL BACKFILL	EXCAVATED MATERIAL	EXCAVATED MATERIAL	EXCAVATED MATERIAL	SBM	SBM	SBM
SELECT BACKFILL	SELECT FILL (SF)	SELECT FILL	SELECT FILL	SBM	SBM	SBM
INITIAL BACKFILL	COVER ≤10' SF >10' SBM	COVER ≤10' SF >10' SF	COVER ≤10' SF >10' SBM	SBM	SBM	SBM
HAUNCHING	COVER ≤10' SBM >10' SBM	COVER ≤10' SF >10' SBM	COVER ≤10' SBM >10' SBM	SBM	SBM	SBM
BEDDING	See Note 5	See Note 5	See Note 5	See Note 5	See Note 5	See Note 5

NOTES:
1. BACK FILLING FOR PVC PIPE SHALL MEET THE REQUIREMENTS OF ASTM D 2321.
2. SELECT FILL CONSISTS OF EXCAVATED MATERIALS CONTAINING NO ROCKS LARGER THAN 50 MM (2").
3. STANDARD BEDDING MATERIAL (SBM) SHALL CONFORM TO ODOT 703.01, TYPE A AGGREGATE BASE, OR FLOWABLE FILL PER SECTION 501.02(B).
4. COMPACTION REQUIREMENTS:
   a. NON-PAVED AREAS: 90% MAXIMUM STANDARD PROCTOR DENSITY FOR COHESIONLESS SOILS AND 85% FOR COHESIVE SOILS.
   b. PAVED AREAS: 95% MAXIMUM STANDARD PROCTOR DENSITY FOR COHESIONLESS SOILS.
5. IF TRENCH IS DRY: BEDDING SHALL BE 100 MM (4") TYPE A AGGREGATE BASE, AND IF WET SHALL BE NO. 57 OR NO. 67 ROCK PER SECTION 701.06(C).
6. NO WATER JETTING ALLOWED UNDER PAVEMENT.
7. THE BACKFILL MATERIAL SHALL EXTEND A MINIMUM OF 2-FEET BEHIND THE BACK OF CURB, OR THE EDGE OF PAVEMENT WHERE NO CURB EXISTS.
8. WARNING TAPE SHALL BE INSTALLED ABOVE ALL NEW AND REHABILITATED UNDERGROUND PIPING AFTER PLACEMENT OF SELECT BACKFILL AS PER SECTION 2506.16(J).

METRIC UNITS ARE IN MM WITH ENGLISH UNITS IN PARENTHESIS, UNLESS INDICATED OTHERWISE.

SANITARY SEWER PIPE TRENCHING AND BEDDING

City Engineer Approval:		CITY OF NORMAN, OKLAHOMA	
Approval Date:	Revision Date: 1-30-2006	Rev. No. 6	DRAWING NO. SS 01

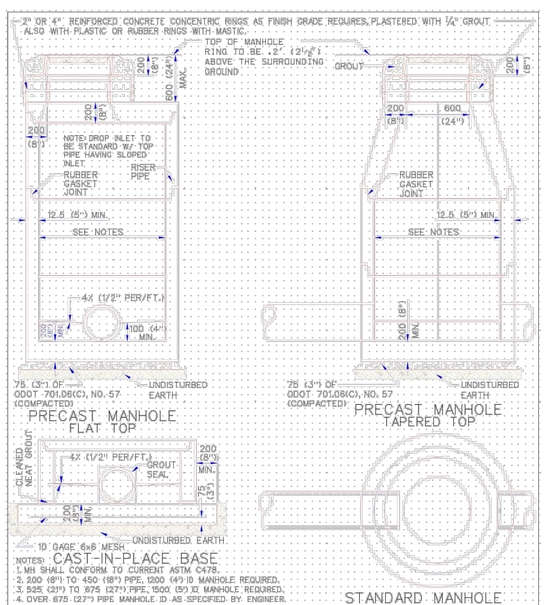

NOTES:
1. MH SHALL CONFORM TO CURRENT ASTM C478.
2. 200 (8") TO 450 (18") PIPE, 1200 (4') ID MANHOLE REQUIRED.
3. 525 (21") TO 675 (27") PIPE, 1500 (5') ID MANHOLE REQUIRED.
4. OVER 675 (27") PIPE MANHOLE ID AS SPECIFIED BY ENGINEER.
5. MANHOLES LESS THAN 1350 (4'-6") IN HEIGHT SHALL HAVE A FULL 1200 (4') ID OR LARGER FROM TOP TO BOTTOM.
6. MIN. CONCRETE STRENGTH TO BE ODOT CLASS A, 20.7 MPa (3000 PSI).
7. IN ASPHALT STREETS, MANHOLES SHALL HAVE 1200 X 1200 X 200 (4'X4'X8") CONCRETE COLLARS W/#4-#6 REINFORCING BARS.

METRIC UNITS ARE IN MM WITH ENGLISH UNITS IN PARENTHESIS, UNLESS INDICATED OTHERWISE.

PRECAST MANHOLE

City Engineer Approval:		CITY OF NORMAN, OKLAHOMA	
Approval Date:	Revision Date: 8-09-2006	Rev. No. 1	DRAWING NO. SS 02

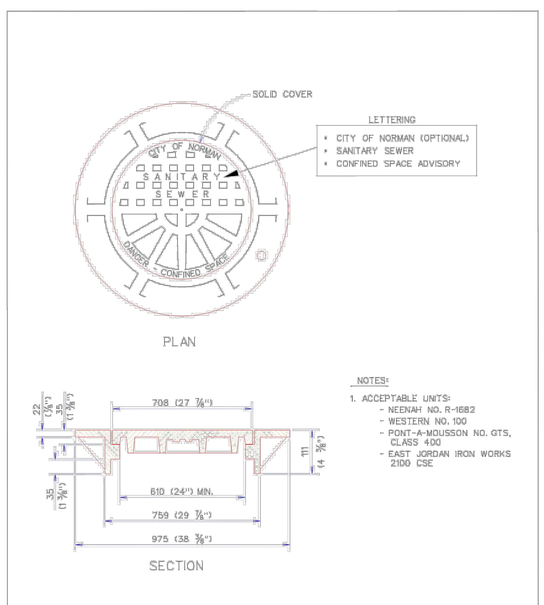

NOTES:
1. ACCEPTABLE UNITS:
   - NEENAH NO. R-1682
   - WESTERN NO. 100
   - PONT-A-MOUSSON NO. GTS, CLASS 400
   - EAST JORDAN IRON WORKS 2100 CSE

METRIC UNITS ARE IN MM WITH ENGLISH UNITS IN PARENTHESIS, UNLESS INDICATED OTHERWISE.

MANHOLE FRAME AND COVER

City Engineer Approval:		CITY OF NORMAN, OKLAHOMA	
Approval Date:	Revision Date: 2-08-2006	Rev. No. 2	DRAWING NO. SS 04

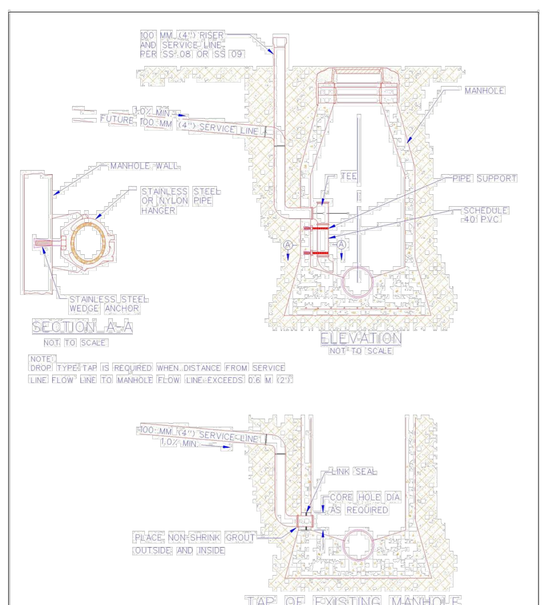

METRIC UNITS ARE IN MM WITH ENGLISH UNITS IN PARENTHESIS, UNLESS INDICATED OTHERWISE.

SANITARY SEWER TAP AT MANHOLE

City Engineer Approval:		CITY OF NORMAN, OKLAHOMA	
Approval Date:	Revision Date: 11-22-2004	Rev. No. 1	DRAWING NO. SS 10

PDG
PLANNING DESIGN GROUP
LANDSCAPE ARCHITECTURE • RECREATIONAL DESIGN • LAND PLANNING
5314 S. YALE AVE., SUITE 710, TULSA, OK 74135
918.628.1255 918.628.1256 FAX
WWW.PLANNINGDESIGNGROUP.COM

J&A
Johnson & Associates, Inc.
1 E. Sheridan Ave., Suite 200
Oklahoma City, OK 73104
(405) 235-8075 FAX (405) 235-8078 www.jaokc.com
Certificate of Authorization #1484 Exp. Date: 06-30-2019
ENGINEERS • SURVEYORS • PLANNERS

REGISTERED PROFESSIONAL ENGINEER TIMOTHY JOHNSON 12227 OKLAHOMA
RENEWAL DATE: 04/30/2024

PROJECT INFORMATION

PROJECT ADDRESS:

1001 E. ROBINSON ST.,
NORMAN, OKLAHOMA 73071

PROJECT NO.	
DATE	
DRAWN BY	CHECKED BY

GRIFFIN SOCCER COMPLEX
PHASE 6
NORMAN, OKLAHOMA

ISSUE/ REVISIONS

04/29/22	65% REVIEW SET
06/03/22	BID SET

OWNER:
THE CITY OF NORMAN PARKS & RECREATION
201-C WEST GRAY
NORMAN, OK 73069
(405) 366-5472

C5.1

DETAILS

GRIFFIN SOCCER COMPLEX
PHASE 6 - CONCESSIONS & RESTROOM
NORMAN, OKLAHOMA

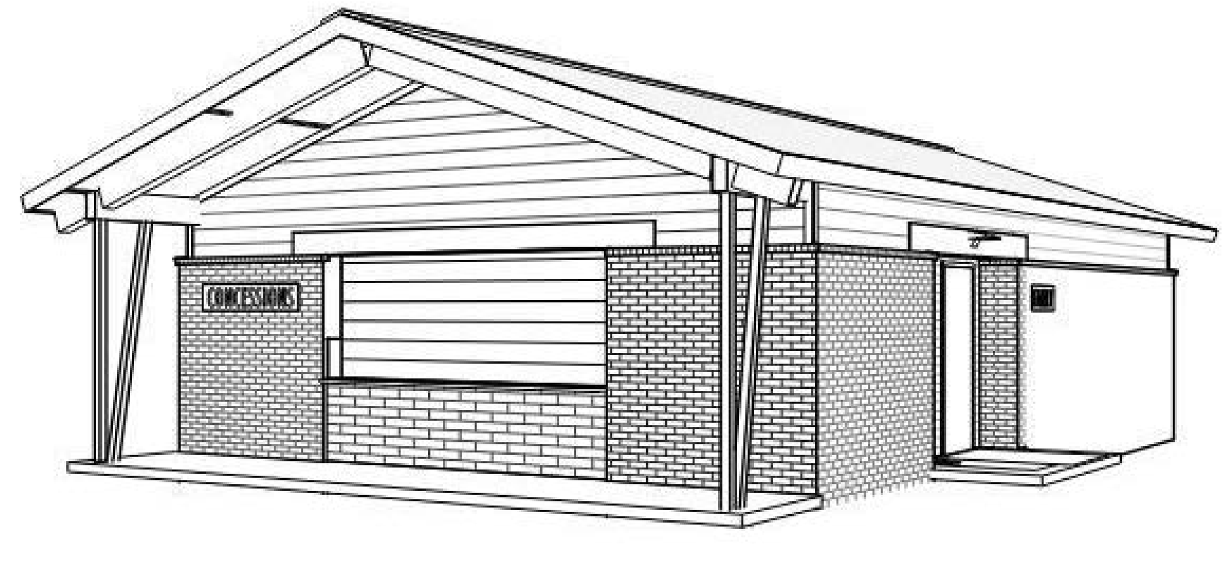

ABBREVIATIONS

&	AND	JAN	JANITOR
∠	ANGLE	JT	JOINT
@	AT	L	LONG / LENGTH
℄	CENTERLINE	LT (LTG)	LIGHT (LIGHTING)
[	CHANNEL	LWC	LIGHTWEIGHT CONCRETE
Ø	DIAMETER OR ROUND	MAX	MAXIMUM
#	NUMBER OR POUND	MECH	MECHANICAL
ℙL	PLATE	MFG	MANUFACTURING
SF	SQUARE FOOT (FEET)	MFR	MANUFACTURER
		MIN	MINIMUM
ACOUST	ACOUSTICAL	MISC	MISCELLANEOUS
AD	AREA DRAIN	MTD	MOUNTED
ADJ	ADJUSTABLE	MTL	METAL
AFF	ABOVE FINISH FLOOR		
ALUM	ALUMINUM	N	NORTH
APPROX	APPROXIMATE	N / A	NOT APPLICABLE
ARCH	ARCHITECTURAL	NIC	NOT IN CONTRACT
		NO	NUMBER
BD	BOARD	NOM	NOMINAL
BLDG	BUILDING	NPS	NATIONAL PIPE STANDARD
BLKG	BLOCKING	NTS	NOT TO SCALE
CJ	CONTROL JOINT	OC	ON CENTER
CLG	CEILING	OD	OUTSIDE DIAMETER / DIMENSION
COL	COLUMN	OH	OPPOSITE HAND
CONC	CONCRETE	OPNG	OPENING
CONN	CONNECTION	OVHD	OVERHEAD
CONSTR	CONSTRUCTION	OZ	OUNCE
CONT	CONTINUOUS		
CONTR	CONTRACTOR	PL	PLATE
CTR	CENTER	PLBG	PLUMBING
		PLYWD	PLYWOOD
DBL	DOUBLE	POL	POLISHED
DIA	DIAMETER	PR	PAIR
DIM	DIMENSION	PT	POINT
DN	DOWN	PTD	PAINTED
DR	DOOR		
		QTY	QUANTITY
E	EAST		
EA	EACH	R	RISER OR RADIUS
E	ELEVATION	RCP	REFLECTED CEILING PLAN
ELEC	ELECTRICAL	RE	REFERENCE REINFORCED
ELEV	ELEVATOR	REINF	REINFORCED
EQ	EQUAL	REQ'D	REQUIRED
EQUIP	EQUIPMENT	REV	REVISION
EXP	EXPANSION	RM	ROOM
EXIST	EXISTING	RO	ROUGH OPENING
EXT	EXTERIOR		
		SD	SCUPPER DRAIN
FD	FLOOR DRAIN	SPHD	SPRINKLER HEAD
FFD	FUNNEL FLOOR DRAIN	SQ	SQUARE
FIN	FINISH	SS	STAINLESS STEEL
FL	FLOOR	STD	STANDARD
FOF	FACE OF FINISH	STL	STEEL
FOS	FACE OF STUD	STOR	STORAGE
FR (FRM)	FRAME	STRUCT	STRUCTURE / STRUCTURAL
FS	FLOOR SINK	SY (SQ YD)	SQUARE YARD(S)
FT	FOOT OR FEET	SHT	SHEET
FURR	FURRING	SIM	SIMILAR
		SPEC	SPECIFICATION
GA	GAUGE		
GALV	GALVANIZED	T	TREAD
GL	GLASS	TEL	TELEPHONE
GYP BD	GYPSUM BOARD	TEMP	TEMPERED
		TOD	TOP OF DECK
HDW	HARDWARE	TOS	TOP OF SLAB OR TOP OF STEEL
HDW	HARDWOOD	TOW	TOP OF WALL
HM	HOLLOW METAL	TV	TELEVISION
HORIZ	HORIZONTAL	TYP	TYPICAL
HT	HEIGHT		
		UNO	UNLESS OTHERWISE NOTED
ID	INSIDE DIAMETER /		
DIMENSION		VERT	VERTICAL
IN	INCH		
INFO	INFORMATION	W	WEST OR WIDE OR WIDTH
INSUL	INSULATION	W /	WITH
INT	INTERIOR	W / I	WITHIN
		W / O	WITHOUT
		WD	WOOD
		WND	WINDOW
		WT	WEIGHT

DIMENSIONING CRITERIA

All drawings are intended to be complementary. Notify the architect of any dimensioning discrepancy prior to proceeding.

Dimensions are to face of concrete and CMU walls (nominal dimensions).

Dimensions are to outside face of gypsum board / stud walls.

Dimensions are as identified on the documents or as established by criteria as follows:

1. DIMENSIONS WILL NOT BE SHOWN FOR THE FOLLOWING CONDITIONS:
-When partition is centered on grid line.
-When partition is shown flush with column face.
-When partition is shown flush with grid line.
When face of partition is centered on glazing mullion.
2. MASONRY / METAL STUD WALLS ARE DIMENSIONED FROM FINISHED FACE.

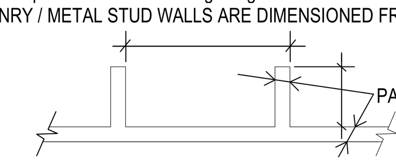

3. FOR OPENINGS IN PARTITIONS OR WALLS:
-When one occurs at gridline, no dimensions will be shown and width will be established by either criteria or schedules
-When neither jamb occurs at a partition intersection, at a column or at a gridline: one jamb will be located dimensionally by the detail.
-When one jamb is located by a partition intersection, the following diagram applies:

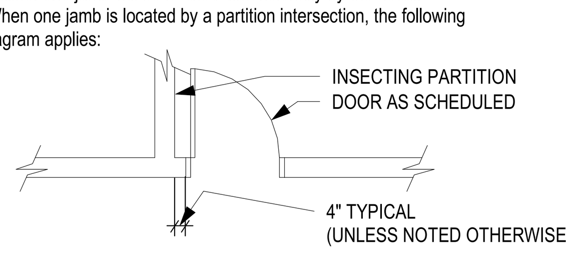

WHEN ONE JAMB IS LOCATED BY A COLUMN, THE FOLLOWING DIAGRAM APPLIES:

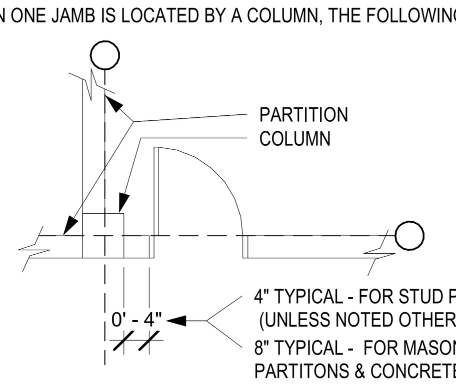

GRAPHIC SYMBOLS

COLUMN AND / OR GRID LINES (A) (B)

FLOOR PLAN MATCHLINE SYMBOL

CENTERLINE SYBMOL / GRID LINE

EXPANSION JOINT LOCATION LINES

GRAPHIC SCALE SYMBOL
0 8' 16' 32'

NORTH ARROW SYMBOL
NORTH

MATERIAL KEYNOTE SYMBOL
PT-1

SPOT ELEVATION SYMBOL
0' - 0"
OR 0' - 0" FIN. FLR. HT.

FLOOR ELEVATION LEVEL SYMBOL
Level 1
0' - 0"

DETAIL REFERENCE SYMBOL
DETAIL
SHEET NUMBER

EXTERIOR BUILDING SECTION SYMBOL

BUILDING/WALL SECTION SYMBOL

DETAIL SECTION SYMBOL

BUILDING ELEVATION SYMBOL

INTERIOR ELEVATION/DETAIL SYMBOL

RAILING SYMBOL
Rail Type Designation
Rail Type Number
R 3B

REVISIONS SYMBOL
Area / Item Revised
Revision Number

ROOM / SPACE IDENIFICATION SYMBOL
DANCE FLOOR 120
Room Name
Room Number

DOOR NUMBER SYMBOL
120

GRAPHIC MATERIALS LEGEND

EARTH	CONTINUOUS LUMBER
AGGREGATE FILL	RIGID INSULATION
CONCRETE	BLANKET INSULATION
PRECAST CONCRETE	GROUT
BRICK IN PLAN	GYPSUM BOARD
CONCRETE MASONRY UNITS	MARBLE / GRANITE
CUT/ CAST STONE	ACOUSITCAL TILE / BOARD
STEEL	WOOD GRAIN
MORTAR NET	PLYWOOD
DISCONTINUOUS ROUGH LUMBER	FINISH LUMBER

LIST OF DRAWINGS

ARCHITECTURAL		
SHEET NUMBER	SHEET NAME	CURRENT SHEET DATE
A1.10C	OVERALL FLOOR PLAN	06/03/22
A1.10R	OVERALL FLOOR PLAN & ROOF PLAN	06/03/22
A1.20C	ROOF PLAN	06/03/22
A1.50C	ENL. RESTROOM PLANS	06/03/22
A2.10C	REFLECTED CEILING PLAN	06/03/22
A2.10R	REFLECTED CEILING PLAN	06/03/22
A3.00C	EXTERIOR ELEVATIONS	06/03/22
A3.00R	EXTERIOR ELEVATIONS	06/03/22
A4.00C	BUILDING SECTIONS	06/03/22
A4.00R	BUILDING SECTIONS & WALL SECTION	06/03/22
A5.00C	WALL SECTIONS	06/03/22
A5.00R	WALL SECTIONS	06/03/22
A5.01C	WALL SECTIONS	06/03/22
A5.10C	DETAILS	06/03/22
A5.10R	DETAILS	06/03/22
A5.11C	DETAILS	06/03/22
A5.11R	DETAILS	06/03/22
A6.00C	SCHEDULES, DOOR ELEVATIONS & DOOR DETAILS	06/03/22
A6.00R	INTERIOR ELEVATIONS, SCHEDULES, DOOR & PARTITION TYPES	06/03/22
A6.10C	INTERIOR ELEVATIONS	06/03/22
A6.11C	INTERIOR ELEVATIONS	06/03/22
A7.00	SPECIFICATIONS	06/03/22
A7.01	SPECIFICATIONS	06/03/22

STRUCTURAL		
SHEET NUMBER	SHEET NAME	CURRENT SHEET DATE
S0.00	GENERAL NOTES	06/03/22
S0.10	SPECIAL INSPECTIONS	06/03/22
S1.00C	FRAMING DETAILS	06/03/22
S1.00R	FOUNDATION AND FRAMING PLANS	06/03/22
S2.00C	FOUNDATION DETAILS	06/03/22
S2.00R	FOUNDATION DETAILS	06/03/22
S2.01C	FOUNDATION DETAILS	06/03/22
S3.00C	FRAMING DETAILS	06/03/22
S3.00R	FRAMING DETAILS	06/03/22
S3.01C	FRAMING DETAILS	06/03/22

MECHANICAL / PLUMBING		
SHEET NUMBER	SHEET NAME	CURRENT SHEET DATE
M1.00	MECHANICAL LEGEND & ABBREVIATIONS	06/03/22
M2.00C	PLUMBING PLANS	06/03/22
M2.00R	PLUMBING PLANS	06/03/22
M3.00C	MECHANICAL PLANS	06/03/22
M3.00R	MECHANICAL PLANS	06/03/22
M4.00C	MECHANICAL SCHEDULES & DETAILS	06/03/22
M4.00R	MECHANICAL SCHEDULES & DETAILS	06/03/22
M5.00C	MECHANICAL SPECIFICATIONS	06/03/22
M5.00R	MECHANICAL SPECIFICATIONS	06/03/22
M5.01C	MECHANICAL SPECIFICATIONS	06/03/22
M5.01R	MECHANICAL SPECIFICATIONS	06/03/22

ELECTRICAL		
SHEET NUMBER	SHEET NAME	CURRENT SHEET DATE
E1.00	ELECTRICAL LEGEND & ABBREVIATIONS	06/03/22
E1.01	ELECTRICAL SITE PLAN	06/01/22
E2.01	CONCESSIONS LIGHTING & POWER FLOOR PLANS	06/03/22
E2.02	RESTROOMS LIGHTING & POWER FLOOR PLANS	06/03/22
E3.01	CONCESSIONS MECHANICAL POWER & SYSTEMS FLOOR PLANS	06/03/22
E3.02	RESTROOMS MECHANICAL POWER & SYSTEMS FLOOR PLANS	06/03/22
E4.01	ONE LINE DIAGRAM AND PANEL SCHEDULES	06/03/22
E5.01	ELECTRICAL SPECIFICATIONS	06/03/22

BID SET
JUNE 03, 2022

PDG
PLANNING DESIGN GROUP
LANDSCAPE ARCHITECTURE ● RECREATIONAL DESIGN ● LAND PLANNING
5314 S. YALE AVE., SUITE 710, TULSA, OK 74135
918.628.1255 918.628.1256 FAX
WWW.PLANNINGDESIGNGROUP.COM

gsb inc Architects Planners®
3555 NW 58TH Street
Suite 700-W
Oklahoma City, OK 73112
T: 405.848.9549
F: 405.848.9783
www.gsb-inc.com

Copyright ©2022 GSB, Inc

STATE OF OKLAHOMA · RONALD G. SMITH · 1157 · OKLAHOMA CITY, OK · LICENSED ARCHITECT · 06-03-22

Certificate of Authority No. CA-02114
Expires: June 30,2023

PROJECT INFORMATION

PROJECT ADDRESS:

1001 E. ROBINSON ST.,
NORMAN, OKLAHOMA 73071

PROJECT NO.	171511A
DATE	06/03/22
DRAWN BY	CHECKED BY

GRIFFIN SOCCER COMPLEX
PHASE 6
NORMAN, OKLAHOMA

ISSUE/ REVISIONS

NO.	DATE	DESCRIPTION

OWNER:
THE CITY OF NORMAN PARKS & RECREATION
201-C WEST GRAY
NORMAN, OK 73069
(405) 366-5472

COVER SHEET

A0.00

CODE INFORMATION

Applicable Codes:
- 2015 International Building Code including State and Local Amendments
- 2015 International Mechanical Code including State and Local Amendments
- 2015 International Fuel Gas Code including State and Local Amendments
- 2015 International Plumbing Code including State and Local Amendments
- 2006 International Energy Conservation Code and Appendix
- 2014 NEC (NFPA 70) including State and Local Amendments
- 2015 International Fire Code
- 2015 NFPA-1 Fire Prevention Code and Local Amendments

Occupancy: B BUSINESS

Construction Type: V-B Non Sprinklered

Allowable Area (Table 503): 9,000 G.S.F.	Building Area: 959 G.S.F.
Allowable Height (Table 504.3-4): 40' - 0" / 2 Story	Building Height: 14' - 4" / 1 Story

GENERAL NOTES

1. CODES: ALL WORK SHALL CONFORM TO LOCAL BUILDING CODES, ORDINANCES AND LAWS HAVING JURISDICTION AT PROJECT SITE. REFER TO GENERAL CODE INFORMATION.

2. DIMENSIONS:
   - A. INTERIOR DIMENSIONS ON DRAWINGS ARE TO FINISH FACE OF WALLS OR CENTERLINE OF COLUMNS TYPICALLY, UNLESS NOTED OTHERWISE.
   - B. EXTERIOR DIMENSIONS ARE TO FACE OF STUD, CONCRETE STRUCTURE OR CMU
   - C. DOOR AND CASED OPENINGS WITHOUT LOCATIONS, DIMENSIONS OR DETAILS ARE TO BE CENTERED BETWEEN ADJACENT WALLS. DOORS ADJACENT TO ONE WALL, BUT NOT DIMENSIONED, SHALL BE LOCATED WITH DOOR OPENING 6" FROM FACE OF ADJACENT WALL
   - D. VERIFY ALL DIMENSIONS AND CONDITIONS AND NOTIFY ARCHITECT OF ALL ARCHITECT OF ALL DISCREPANCIES IN WRITING PRIOR TO PROCEEDING WITH WORK.

3. DO NOT SCALE DRAWINGS

4. SUPPORT OVERHEAD OBJECTS THAT ARE SUSPENDED FROM OR ATTACHED TO OVERHEAD SURFACES, WALL SURFACES, OR ATTACHED TO FLOOR MOUNTED STRUCTURES AS REQUIRED TO INSURE FIRM AND STABLE INSTALLATION.

5. FLOOR DRAINAGE: SLOPE FINISH FLOORING SYSTEM AT 1/8" / FOOT MINIMUM TO DRAINS INDICATED ON THE DRAWINGS.

6. EXTERIOR CONCRETE SURFACES SHALL HAVE A NON-SLIP SURFACE FINISH.

7. THE MECHANICAL, PLUMBING, ELECTRICAL, FIRE PROTECTION & ALARM, SPECIAL SYSTEMS, CIVIL, LANDSCAPING, AND LIGHTING DRAWINGS ARE DIAGRAMMATICAL AND COMPLIMENTARY. ANYTHING SHOWN ON THE ARCHITECTURAL DOCUMENTS AND NOT SHOWN ON CIVIL, LANDSCAPE, STRUCTURAL, MECHANICAL, ELECTRICAL, PLUMBING DRAWINGS OR SHOWN ON LANDSCAPE, STRUCTURAL, MECHANICAL, ELECTRICAL, PLUMBING DOCUMENTS AND NOT SHOWN ON ARCHITECTURAL DRAWINGS SHALL BE INTERPRETED AS BEING SHOWN ON ALL DOCUMENTS. REFER TO DRAWINGS AND SPECIFICATIONS FOR INCLUDED DISCIPLINES.
   - A. THE SPECIFICATIONS CONTAIN DESCRIPTIONS OF PERFORMANCE AND MATERIALS/SYSTEMS TO BE INSTALLED IN THE PROJECT.

8. COORDINATION:
   - A. REVIEW AND COORIDINATE REQUIREMENTS OF THE DOCUMENTS BEFORE BEGINING INSTALLATION OR WORK. REPORT DISCREPANCIES DISCOVERED IN WRITING TO THE OWNER AND ARCHITECT. WORK INSTALLED AND FOUND IN CONFLICT WITH THE REQUIREMENTS INDICATED ON DOCUMENTS SHALL BE CORRECTED BY CONTRACTOR AT NO ADDITIONAL COST TO THE OWNER.
   - B. VERIFY THE UTILITY REQUIREMENTS CHARACTERISTIC OF OPERATING EQUIPMENT ARE COMPATABLE WITH BUILDING UTILITIES. COORDINATE WORK OF VARIOUS CONSTRUCTION TRADES HAVING INTERDEPENDENT RESPONSIBILITIES FOR INSTALLING, CONNECTING TO, AND PLACING EQUIPMENT IN SERVICE
   - C. COORDINATE SPACE REQUIREMENTS AND INSTALLATION OF MECHANICAL AND ELECTRICAL WORK INDICATED ON DRAWINGS. VERIFY LOCATION AND REQUIRED OPENING SIZES FOR MECHANICAL AND ELECTRICAL EQUIPMENT, LOCATION AND SIZES OF EQUIPMENT FOR PADS AND BASES, AND REQUIREMENT AND LOCATION OF POWER AND WATER FOR DRAIN INSTALLATION WITH EQUIPMENT MANUFACTURERS BEFORE PROCEEDING WITH THE WORK.
   - D. COMPLY WITH INSTALLATION REQUIREMENTS OF MANUFACTURER'S INSTRUCTIONS AND APPROVED SHOP DRAWINGS.

703.6.1 Pictogram Field

Pictograms shall have a field height of 6 inches (150 mm) minimum. Characters and braille shall not be located in the pictogram field.

Figure 703.6.1 Pictogram Field

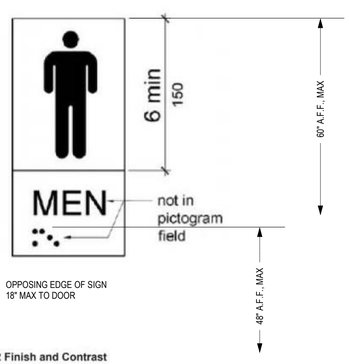

- ONE SIGN FOR MEN
- ONE SIGN FOR WOMEN
- ONE SIGN WITH MEN / WOMEN COMBINED FOR UNISEX

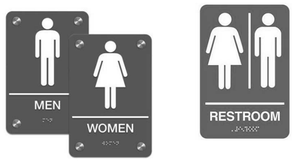

703.6.2 Finish and Contrast

Pictograms and their field shall have a non-glare finish. Pictograms shall contrast with their field with either a light pictogram on a dark field or a dark pictogram on a light field.

Advisory 703.6.2 Finish and Contrast. Signs are more legible for persons with low vision when characters contrast as much as possible with their background. Additional factors affecting the ease with which the text can be distinguished from its background include shadows cast by lighting sources, surface glare, and the uniformity of the text and background colors and textures.

703.6.3 Text Descriptors

Pictograms shall have text descriptors located directly below the pictogram field. Text descriptors shall comply with 703.2, 703.3 and 703.4.

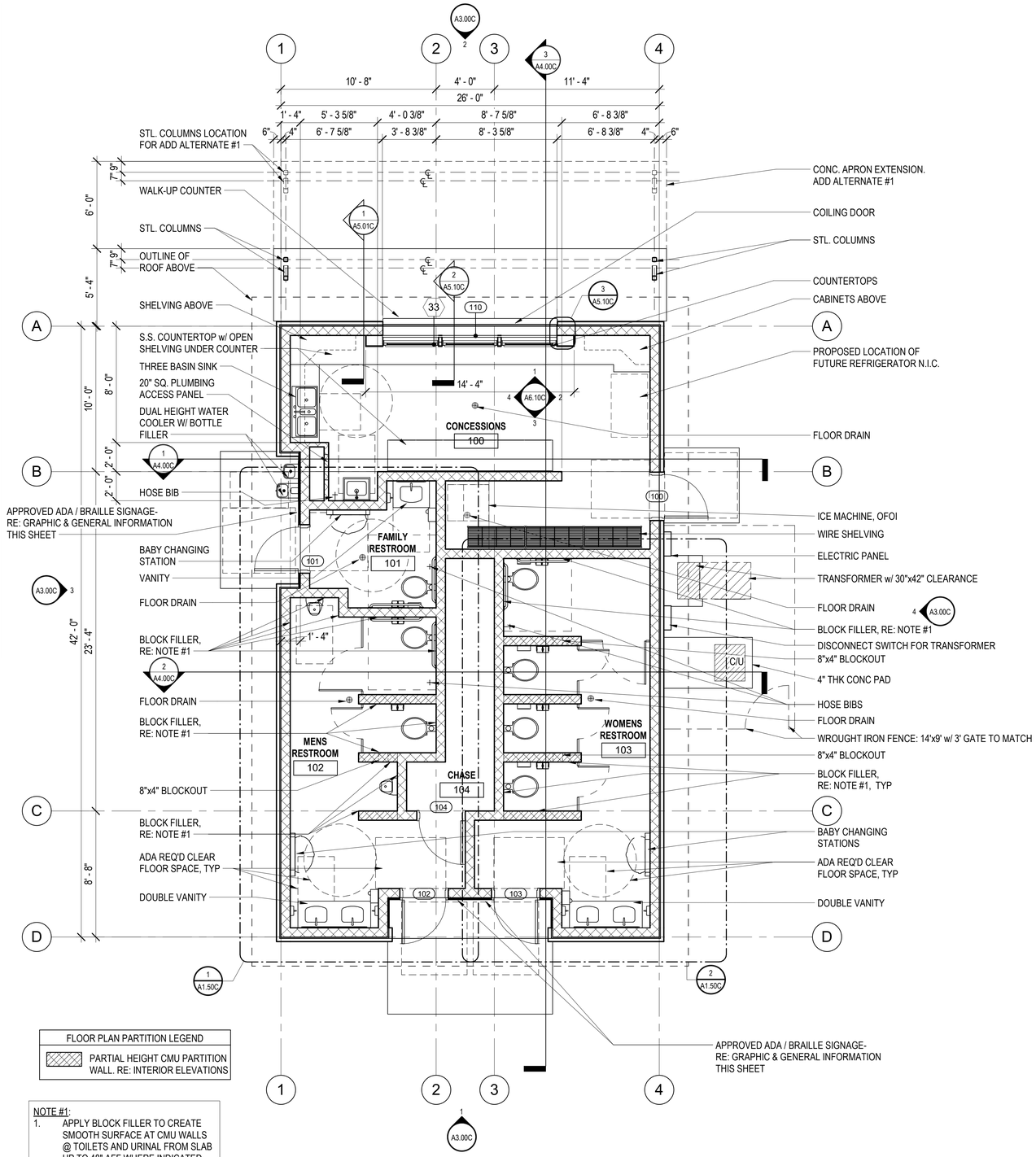

FLOOR PLAN PARTITION LEGEND
PARTIAL HEIGHT CMU PARTITION WALL. RE: INTERIOR ELEVATIONS

NOTE #1:
1. APPLY BLOCK FILLER TO CREATE SMOOTH SURFACE AT CMU WALLS @ TOILETS AND URINAL FROM SLAB UP TO 48" AFF WHERE INDICATED ON PLAN.
2. COORDINATE HEIGHT OF FENCE AND FINISH COLOR WITH OWNER.

OVERALL FLOOR PLAN

1/4" = 1'-0"

PDG
PLANNING DESIGN GROUP
LANDSCAPE ARCHITECTURE ■ RECREATIONAL DESIGN ■ LAND PLANNING
5314 S. YALE AVE., SUITE 710, TULSA, OK 74135
918.628.1255 918.628.1256 FAX
WWW.PLANNINGDESIGNGROUP.COM

gsb inc
3555 NW 58TH Street
Suite 700-W
Oklahoma City, OK 73112
T: 405.848.9549
F: 405.848.9783
www.gsb-inc.com

Copyright ©2022 GSB, Inc

STATE OF OKLAHOMA 11372 06-03-22 LICENSED ARCHITECT

Certificate of Authority No. CA-02114
Expires: June 30,2023

PROJECT INFORMATION

PROJECT ADDRESS:

1001 E. ROBINSON ST.,
NORMAN, OKLAHOMA 73071

PROJECT NO.	171511A
DATE	06/03/22
DRAWN BY	CHECKED BY

GRIFFIN SOCCER COMPLEX
PHASE 6
NORMAN, OKLAHOMA

ISSUE/ REVISIONS

NO.	DATE	DESCRIPTION

OWNER:
THE CITY OF NORMAN PARKS & RECREATION
201-C WEST GRAY
NORMAN, OK 73069
(405) 366-5472

BID SET

OVERALL FLOOR PLAN

A1.10C

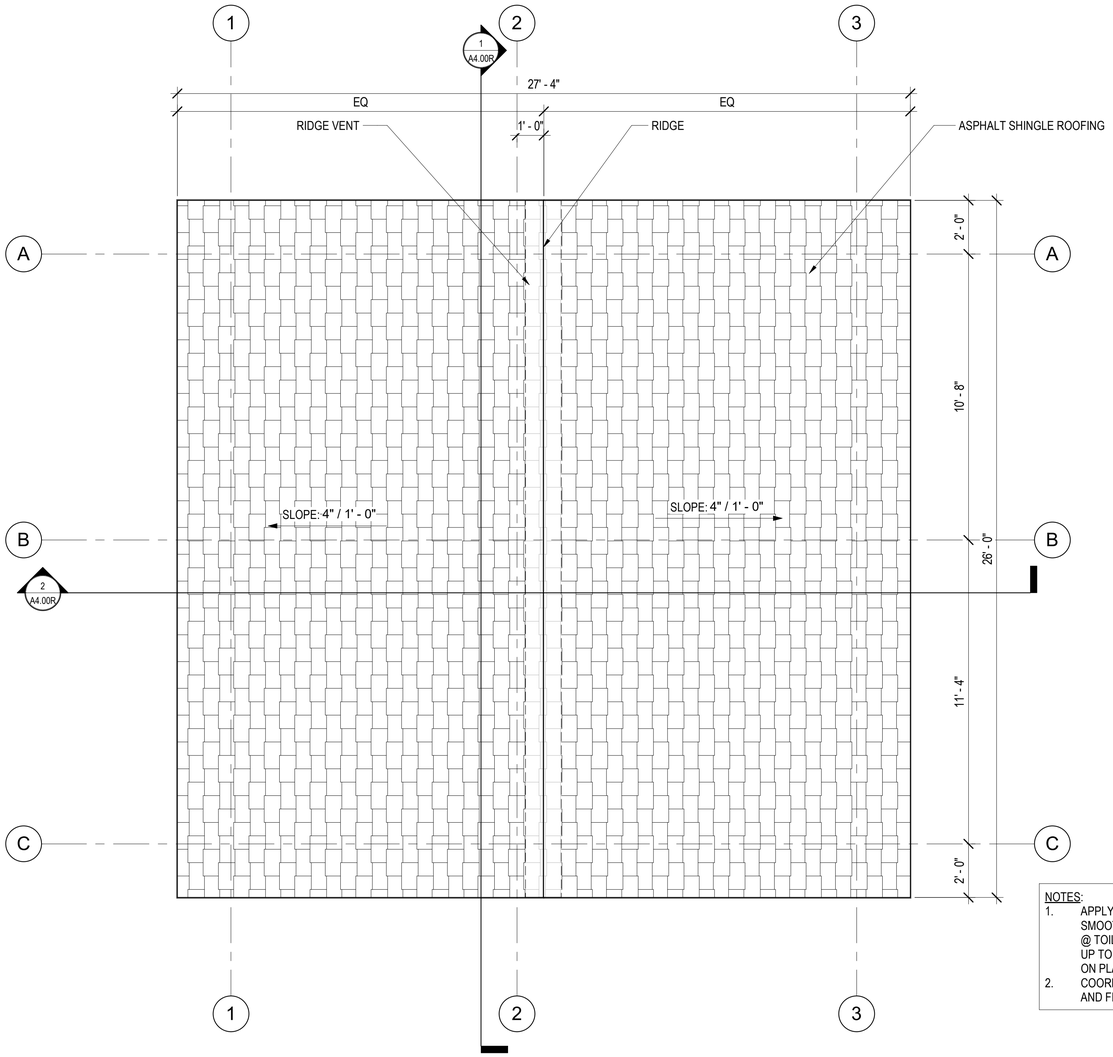

1 ROOF PLAN
A1.10R 3/8" = 1'-0"

PLAN NORTH

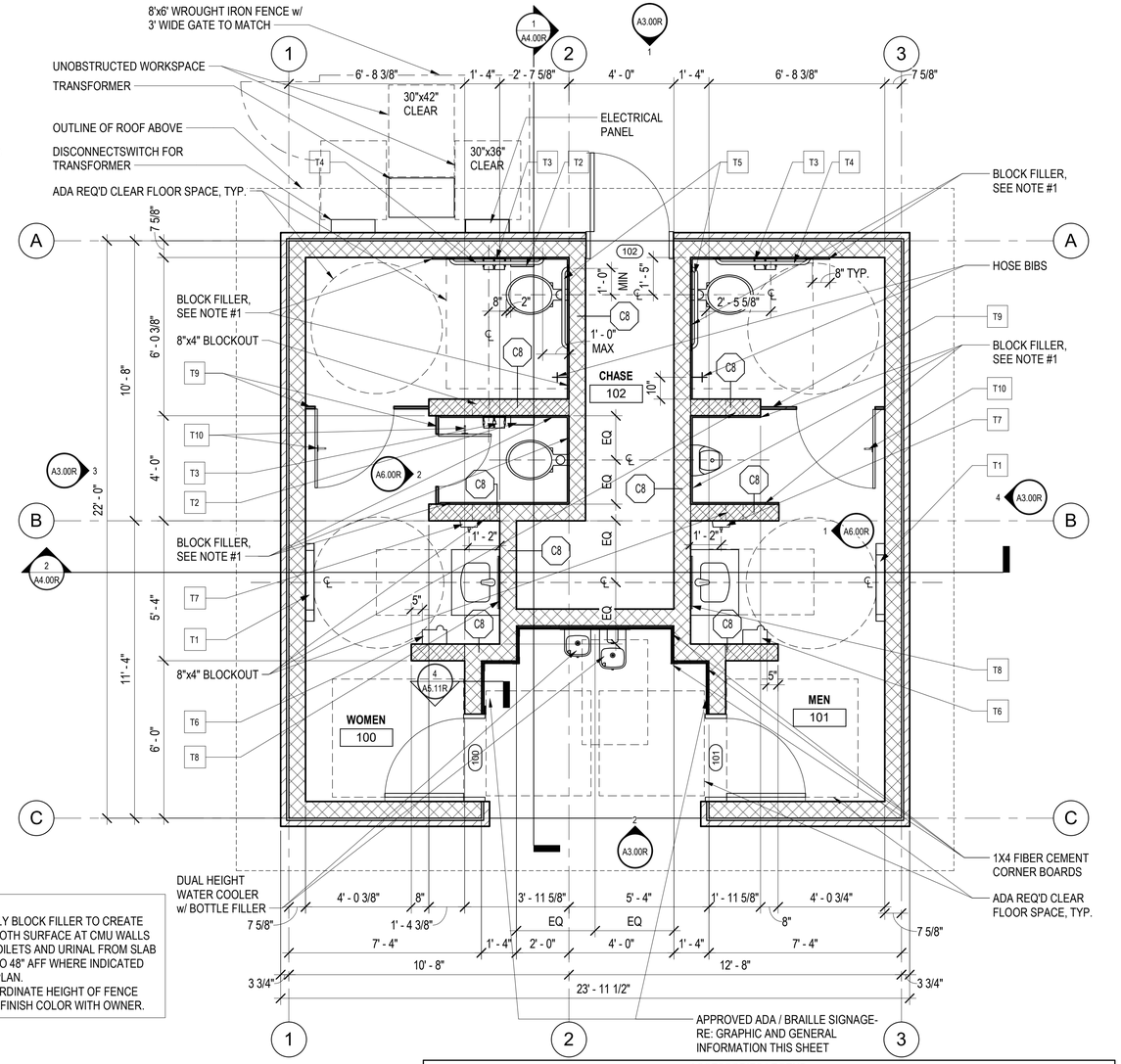

NOTES:
1. APPLY BLOCK FILLER TO CREATE SMOOTH SURFACE AT CMU WALLS @ TOILETS AND URINAL FROM SLAB UP TO 48" AFF WHERE INDICATED ON PLAN.
2. COORDINATE HEIGHT OF FENCE AND FINISH COLOR WITH OWNER.

2 FLOOR PLAN
A1.10R 3/8" = 1'-0"

PLAN NORTH

FLOOR PLAN PARTITION LEGEND	
	PARTIAL HEIGHT CMU PARTITION WALL. RE: INTERIOR ELEVATIONS

ACCESSORIES LEGEND				
NO.	DESCRIPTION	MANUFACTURER	MODEL	COMMENTS
T1	BABY CHANGING STATION	KOALA KARE	KB200	
T2	SANITARY NAPKIN DISPOSAL	BRADLEY CORPORATION	4722-15	1.5 GALLONS
T3	TOILET PAPER DISPENSER	BRADLEY CORPORATION	522	DIECAST ZINC, CHROME-PLATED FINISH
T4	ACCESSIBLE GRAB BAR - 42"	BRADLEY CORPORATION	812	
T5	ACCESSIBLE GRAB BAR - 36"	BRADLEY CORPORATION	812	
T6	HAND DRYER	BRADLEY CORPORATION	2903-28	
T7	SOAP DISPENSER	BRADLEY CORPORATION	6542	
T8	MIRROR - 24"x36"	BRADLEY CORPORATION	780	ACCESSIBLE MIRROR
T9	TOILET PARTITION	BRADLEY CORPORATION	SERIES 700	PHENOLIC
T10	COAT/PURSE HOOK	BRADLEY CORPORATION	MODEL 9119	

*ALL WALL HUNG ACCESSORIES TO BE SURFACE MOUNTED ONTO CMU WALLS

703.6.1 Pictogram Field

Pictograms shall have a field height of 6 inches (150 mm) minimum. Characters and braille shall not be located in the pictogram field.

Figure 703.6.1 Pictogram Field

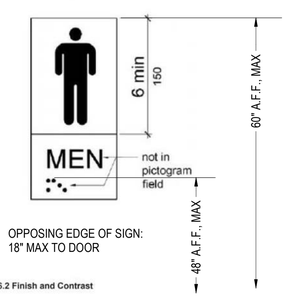

ONE SIGN FOR MEN
ONE SIGN FOR WOMEN

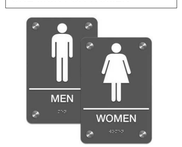

703.6.2 Finish and Contrast

Pictograms and their field shall have a non-glare finish. Pictograms shall contrast with their field with either a light pictogram on a dark field or a dark pictogram on a light field.

Advisory 703.6.2 Finish and Contrast. Signs are more legible for persons with low vision when characters contrast as much as possible with their background. Additional factors affecting the ease with which the text can be distinguished from its background include shadows cast by lighting sources, surface glare, and the uniformity of the text and background colors and textures.

703.6.3 Text Descriptors

Pictograms shall have text descriptors located directly below the pictogram field. Text descriptors shall comply with 703.2, 703.3 and 703.4.

CODE INFORMATION

Applicable Codes:
- 2015 International Building Code including State and Local Amendments
- 2015 International Mechanical Code including State and Local Amendments
- 2015 International Fuel Gas Code including State and Local Amendments
- 2015 International Plumbing Code including State and Local Amendments
- 2006 International Energy Conservation Code and Appendix
- 2014 NEC (NFPA 70) including State and Local Amendments
- 2015 International Fire Code
- 2015 NFPA-1 Fire Prevention Code and Local Amendments

Occupancy: B BUSINESS

Construction Type: V-B Non Sprinklered

Allowable Area (Table 503): 9,000 G.S.F. — Building Area: 542 G.S.F.

Allowable Height (Table 504.3-4): 40' - 0" / 2 Story — Building Height: 14' - 2" / 1 Story

GENERAL NOTES

1. CODES: ALL WORK SHALL CONFORM TO LOCAL BUILDING CODES, ORDINANCES AND LAWS HAVING JURISDICTION AT PROJECT SITE. REFER TO GENERAL CODE INFORMATION.

2. DIMENSIONS:
A. INTERIOR DIMENSIONS ON DRAWINGS ARE TO FINISH FACE OF WALLS OR CENTERLINE OF COLUMNS TYPICALLY, UNLESS NOTED OTHERWISE.
B. EXTERIOR DIMENSIONS ARE TO FACE OF STUD, CONCRETE STRUCTURE OR CMU
C. DOOR AND CASED OPENINGS WITHOUT LOCATIONS, DIMENSIONS OR DETAILS ARE TO BE CENTERED BETWEEN ADJACENT WALLS. DOORS ADJACENT TO ONE WALL, BUT NOT DIMENSIONED, SHALL BE LOCATED WITH DOOR OPENING 6" FROM FACE OF ADJACENT WALL
D. VERIFY ALL DIMENSIONS AND CONDITIONS AND NOTIFY ARCHITECT OF ALL ARCHITECT OF ALL DISCREPANCIES IN WRITING PRIOR TO PROCEEDING WITH WORK.

3. DO NOT SCALE DRAWINGS

4. SUPPORT OVERHEAD OBJECTS THAT ARE SUSPENDED FROM OR ATTACHED TO OVERHEAD SURFACES, WALL SURFACES, OR ATTACHED TO FLOOR MOUNTED STRUCTURES AS REQUIRED TO INSURE FIRM AND STABLE INSTALLATION.

5. FLOOR DRAINAGE: SLOPE FINISH FLOORING SYSTEM AT 1/8" / FOOT MINIMUM TO DRAINS INDICATED ON THE DRAWINGS.

6. EXTERIOR CONCRETE SURFACES SHALL HAVE A NON-SLIP SURFACE FINISH.

7. THE MECHANICAL, PLUMBING, ELECTRICAL, FIRE PROTECTION & ALARM, SPECIAL SYSTEMS, CIVIL, LANDSCAPING, AND LIGHTING DRAWINGS ARE DIAGRAMMATICAL AND COMPLIMENTARY. ANYTHING SHOWN ON THE ARCHITECTURAL DOCUMENTS AND NOT SHOWN ON CIVIL, LANDSCAPE, STRUCTURAL, MECHANICAL, ELECTRICAL, PLUMBING DRAWINGS OR SHOWN ON LANDSCAPE, STRUCTURAL, MECHANICAL, ELECTRICAL, PLUMBING DOCUMENTS AND NOT SHOWN ON ARCHITECTURAL DRAWINGS SHALL BE INTERPRETED AS BEING SHOWN ON ALL DOCUMENTS. REFER TO DRAWINGS AND SPECIFICATIONS FOR INCLUDED DISCIPLINES.
A. THE SPECIFICATIONS CONTAIN DESCRIPTIONS OF PERFORMANCE AND MATERIALS/SYSTEMS TO BE INSTALLED IN THE PROJECT.

8. COORDINATION:
A. REVIEW AND COORIDINATE REQUIREMENTS OF THE DOCUMENTS BEFORE BEGINING INSTALLATION OR WORK. REPORT DISCREPANCIES DISCOVERED IN WRITING TO THE OWNER AND ARCHITECT. WORK INSTALLED AND FOUND IN CONFLICT WITH THE REQUIREMENTS INDICATED ON DOCUMENTS SHALL BE CORRECTED BY CONTRACTOR AT NO ADDITIONAL COST TO THE OWNER.
B. VERIFY THE UTILITY REQUIREMENTS CHARACTERISTIC OF OPERATING EQUIPMENT ARE COMPATABLE WITH BUILDING UTILITIES. COORDINATE WORK OF VARIOUS CONSTRUCTION TRADES HAVING INTERDEPENDENT RESPONSIBILITIES FOR INSTALLING, CONNECTING TO, AND PLACING EQUIPMENT IN SERVICE
C. COORDINATE SPACE REQUIREMENTS AND INSTALLATION OF MECHANICAL AND ELECTRICAL WORK INDICATED ON DRAWINGS. VERIFY LOCATION AND REQUIRED OPENING SIZES FOR MECHANICAL AND ELECTRICAL EQUIPMENT, LOCATION AND SIZES OF EQUIPMENT FOR PADS AND BASES, AND REQUIREMENT AND LOCATION OF POWER AND WATER FOR DRAIN INSTALLATION WITH EQUIPMENT MANUFACTURERS BEFORE PROCEEDING WITH THE WORK.
D. COMPLY WITH INSTALLATION REQUIREMENTS OF MANUFACTURER'S INSTRUCTIONS AND APPROVED SHOP DRAWINGS.

BID SET

PDG
PLANNING DESIGN GROUP
LANDSCAPE ARCHITECTURE ■ RECREATIONAL DESIGN ■ LAND PLANNING
5314 S. YALE AVE., SUITE 710, TULSA, OK 74135
918.628.1255 918.628.1256 FAX
WWW.PLANNINGDESIGNGROUP.COM

gsb architects planners
3555 NW 58TH Street
Suite 700-W
Oklahoma City, OK 73112
T: 405.848.9549
F: 405.848.9783
www.gsb-inc.com

Copyright ©2022 GSB, Inc

STATE OF OKLAHOMA · JAMES G. SEIFERT · 11572 · LICENSED ARCHITECT · 06-03-22

Certificate of Authority No. CA-02114
Expires: June 30,2023

PROJECT INFORMATION	
PROJECT ADDRESS:	
1001 E. ROBINSON ST., NORMAN, OKLAHOMA 73071	
PROJECT NO.	171511A
DATE	06/03/22
DRAWN BY	CHECKED BY

GRIFFIN SOCCER COMPLEX
PHASE 6
NORMAN, OKLAHOMA

ISSUE/ REVISIONS		
NO.	DATE	DESCRIPTION

OWNER:
THE CITY OF NORMAN PARKS & RECREATION
201-C WEST GRAY
NORMAN, OK 73069
(405) 366-5472

FLOOR PLAN & ROOF PLAN

A1.10R

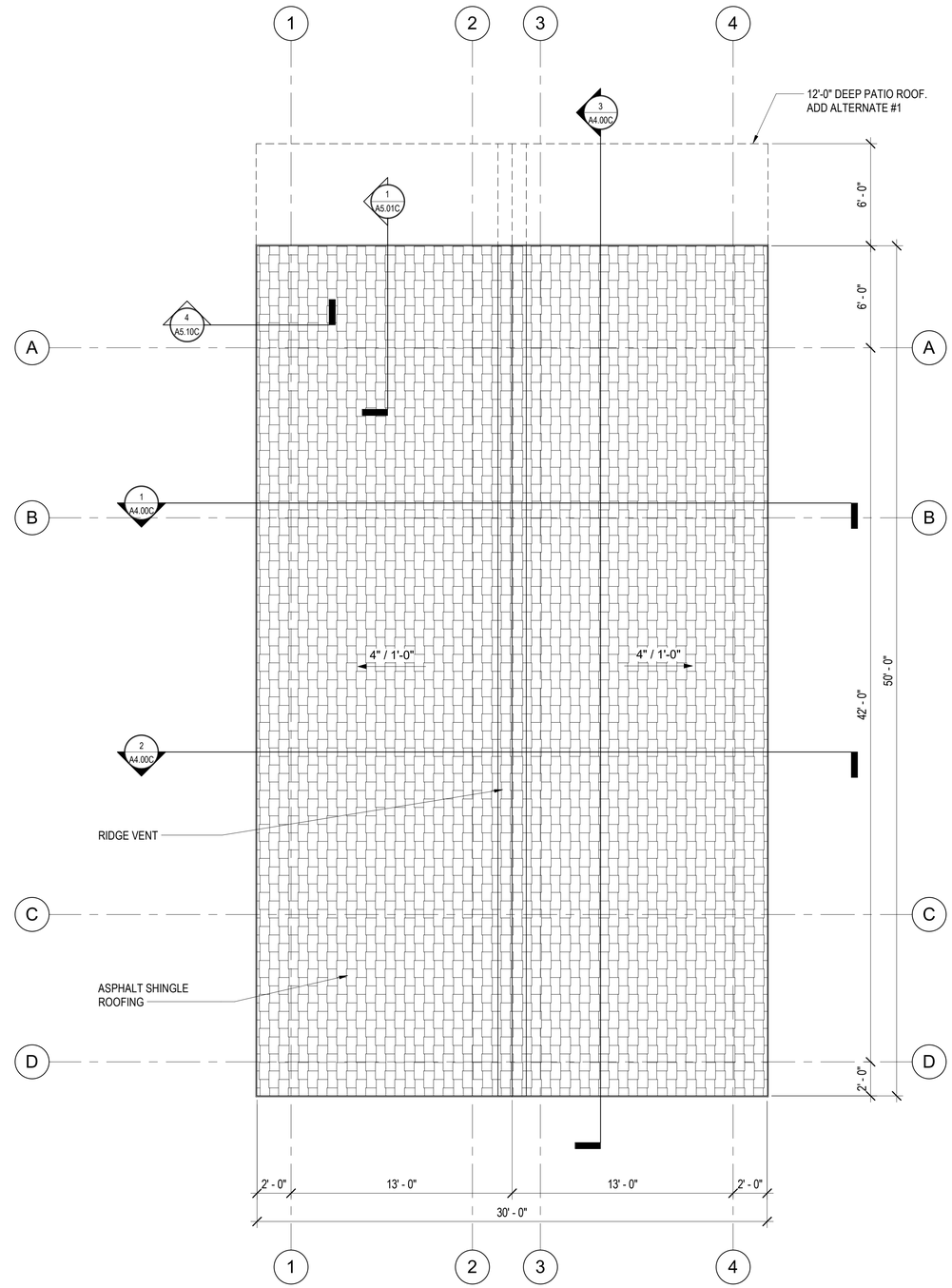

1 A1.20C OVERALL ROOF PLAN
1/4" = 1'-0"

BID SET

PDG
PLANNING DESIGN GROUP
LANDSCAPE ARCHITECTURE ● RECREATIONAL DESIGN ● LAND PLANNING
5314 S. YALE AVE., SUITE 710, TULSA, OK 74135
918.628.1255 918.628.1256 FAX
WWW.PLANNINGDESIGNGROUP.COM

gsb inc
3555 NW 58TH Street
Suite 700-W
Oklahoma City, OK 73112
T: 405.848.9549
F: 405.848.9783
www.gsb-inc.com

Copyright ©2022 GSB, Inc

STATE OF OKLAHOMA
RONALD G. SHAW
1157
06-03-22
LICENSED ARCHITECT

Certificate of Authority No. CA-02114
Expires: June 30,2023

PROJECT INFORMATION

PROJECT ADDRESS:

1001 E. ROBINSON ST.,
NORMAN, OKLAHOMA 73071

PROJECT NO.	171511A
DATE	06/03/22
DRAWN BY	CHECKED BY

GRIFFIN SOCCER COMPLEX
PHASE 6
NORMAN, OKLAHOMA

ISSUE/ REVISIONS

NO.	DATE	DESCRIPTION

OWNER:
THE CITY OF NORMAN PARKS & RECREATION
201-C WEST GRAY
NORMAN, OK 73069
(405) 366-5472

ROOF PLAN

A1.20C

ACCESSORIES LEGEND - RESTROOMS				
NO.	DESCRIPTION	MANUFACTURER	MODEL	COMMENTS
T1	BABY CHANGING STATION	KOALA KARE	KB200	
T2	SANITARY NAPKIN DISPOSAL	BRADLEY CORPORATION	4722-15	1.5 GALLONS
T3	TOILET PAPER DISPENSER	BRADLEY CORPORATION	522	DIECAST ZINC, CHROME-PLATED FINISH
T4	ACCESSIBLE GRAB BAR - 42"	BRADLEY CORPORATION	812	
T5	ACCESSIBLE GRAB BAR - 36"	BRADLEY CORPORATION	812	
T6	HAND DRYER	BRADLEY CORPORATION	2903-28	
T7	SOAP DISPENSER	BRADLEY CORPORATION	6542	
T8.1	MIRROR - 24"x36"	BRADLEY CORPORATION	780	ACCESSIBLE MIRROR
T8.2	MIRROR - 54"x36"	BRADLEY CORPORATION	780	ACCESSIBLE MIRROR
T9	TOILET PARTITION	BRADLEY CORPORATION	SERIES 700	PHENOLIC
T10	COAT/PURSE HOOK	BRADLEY CORPORATION	MODEL 9119	

*ALL WALL HUNG ACCESSORIES TO BE SURFACE MOUNTED ONTO CMU WALLS

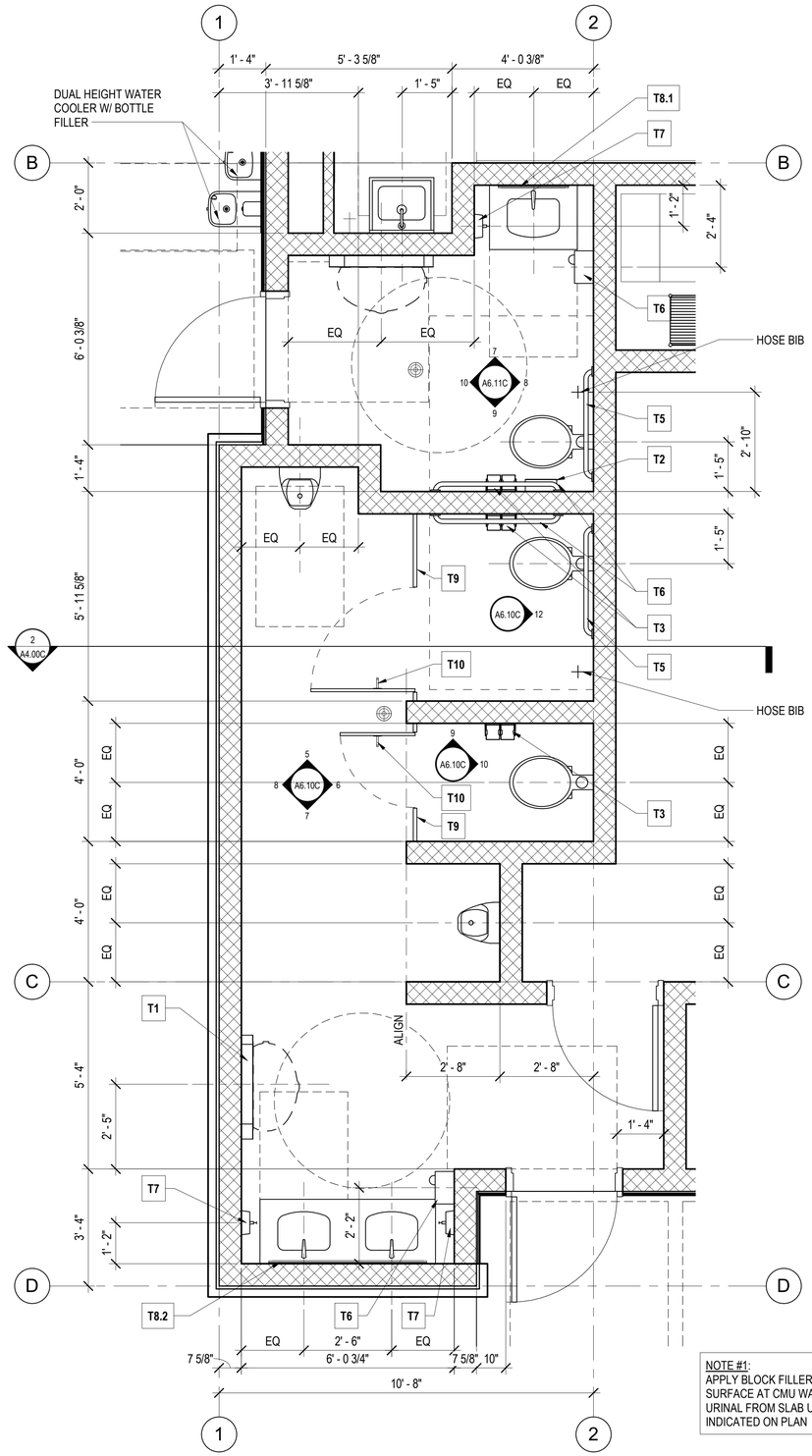

1 A1.50C ENL. MENS AND FAMILY RESTROOMS
1/2" = 1'-0"

NOTE #1:
APPLY BLOCK FILLER TO CREATE SMOOTH SURFACE AT CMU WALLS @ TOILETS AND URINAL FROM SLAB UP TO 48" AFF WHERE INDICATED ON PLAN

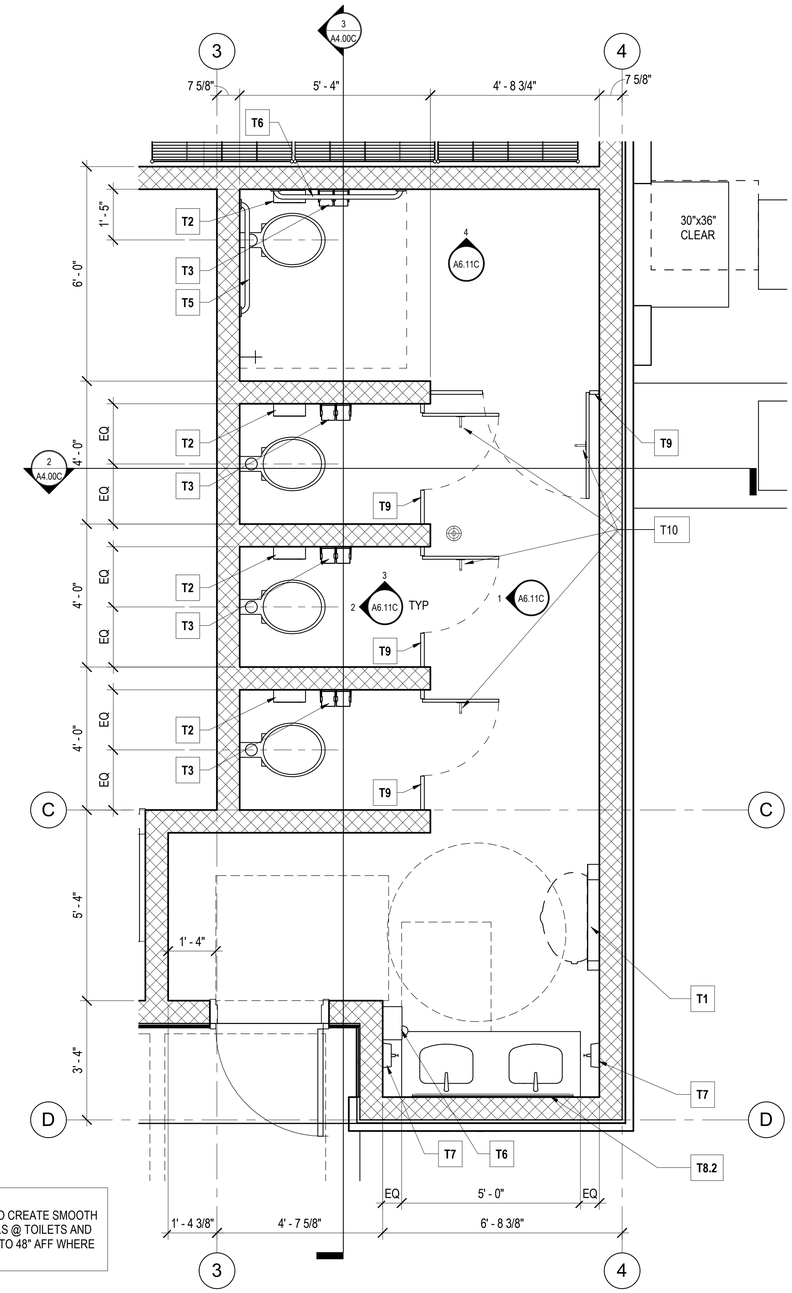

2 A1.50C ENLARGED WOMENS RESTROOM
1/2" = 1'-0"

BID SET

PDG
PLANNING DESIGN GROUP
LANDSCAPE ARCHITECTURE ■ RECREATIONAL DESIGN ■ LAND PLANNING
5314 S. YALE AVE., SUITE 710, TULSA, OK 74135
918.628.1255 918.628.1256 FAX
WWW.PLANNINGDESIGNGROUP.COM

gsb architects planners
3555 NW 58TH Street
Suite 700-W
Oklahoma City, OK 73112
T: 405.848.9549
F: 405.848.9783
www.gsb-inc.com

Copyright ©2022 GSB, Inc

Certificate of Authority No. CA-02114
Expires: June 30,2023

PROJECT INFORMATION

PROJECT ADDRESS:
1001 E. ROBINSON ST.,
NORMAN, OKLAHOMA 73071

PROJECT NO.	171511A
DATE	06/03/22
DRAWN BY	CHECKED BY

GRIFFIN SOCCER COMPLEX
PHASE 6
NORMAN, OKLAHOMA

ISSUE/ REVISIONS

NO.	DATE	DESCRIPTION

OWNER:
THE CITY OF NORMAN PARKS & RECREATION
201-C WEST GRAY
NORMAN, OK 73069
(405) 366-5472

ENL. RESTROOM PLANS

A1.50C

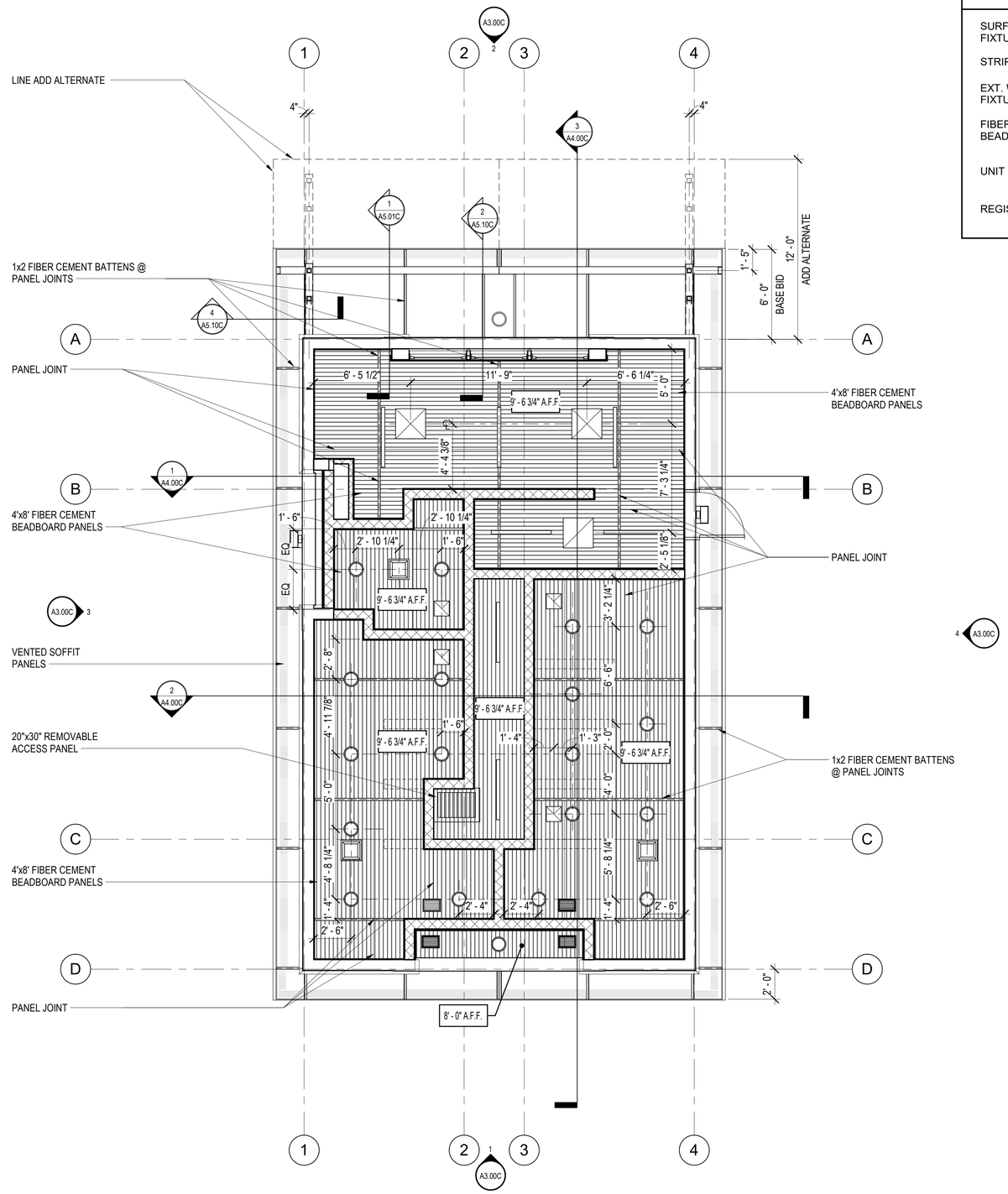

1 REFLECTED CEILING PLAN

1/4" = 1'-0"

RCP LEGEND

SURFACE MOUNTED FIXTURE	
STRIP FIXTURE	
EXT. WALL MOUNTED FIXTURE	
FIBER CEMENT BEADBOARD CEILING	
UNIT HEATER	
REGISTER / GRILLE	

PDG
PLANNING DESIGN GROUP
LANDSCAPE ARCHITECTURE ■ RECREATIONAL DESIGN ■ LAND PLANNING
5314 S. YALE AVE., SUITE 710, TULSA, OK 74135
918.628.1255 918.628.1256 FAX
WWW.PLANNINGDESIGNGROUP.COM

gsb
3555 NW 58TH Street
Suite 700-W
Oklahoma City, OK 73112
T: 405.848.9549
F: 405.848.9783
www.gsb-inc.com

Copyright ©2022 GSB, Inc

STATE OF OKLAHOMA
JAMES D. SHIRLEY
1137
06-03-22
LICENSED ARCHITECT

Certificate of Authority No. CA-02114
Expires: June 30,2023

PROJECT INFORMATION

PROJECT ADDRESS:

1001 E. ROBINSON ST.,
NORMAN, OKLAHOMA 73071

PROJECT NO.	171511A
DATE	06/03/22
DRAWN BY	CHECKED BY

GRIFFIN SOCCER COMPLEX PHASE 6 NORMAN, OKLAHOMA

ISSUE/ REVISIONS

NO.	DATE	DESCRIPTION

OWNER:
THE CITY OF NORMAN PARKS & RECREATION
201-C WEST GRAY
NORMAN, OK 73069
(405) 366-5472

BID SET

REFLECTED CEILING PLAN

A2.10C

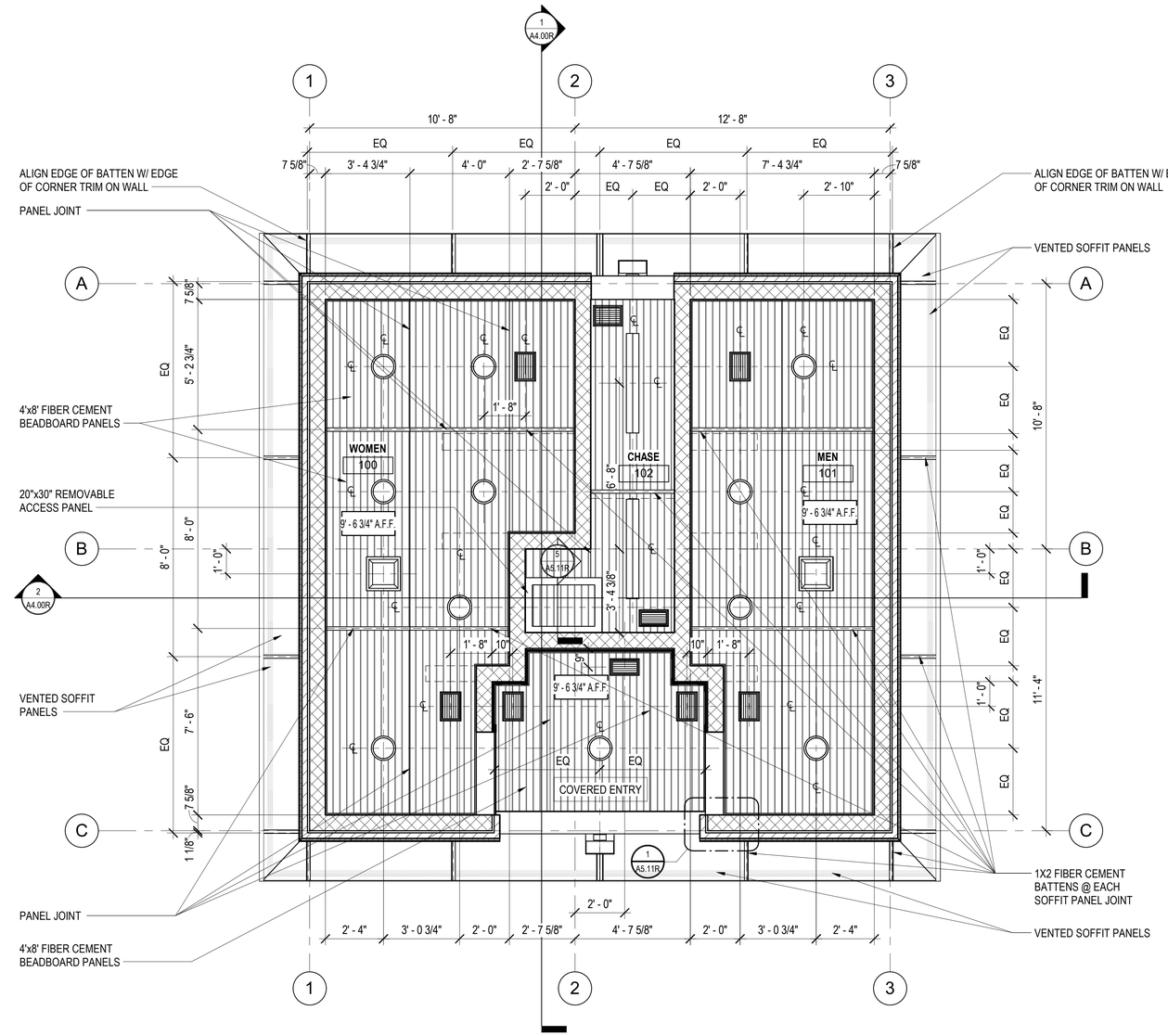

1 A2.10R REFLECTED CEILING PLAN
3/8" = 1'-0"

PLAN NORTH

RCP LEGEND

SURFACE MOUNTED FIXTURE	
STRIP FIXTURE	
EXT. WALL MOUNTED FIXTURE	
FIBER CEMENT BEADBOARD CEILING	
UNIT HEATER	
REGISTER / GRILLE	

BID SET

PDG
PLANNING DESIGN GROUP
LANDSCAPE ARCHITECTURE • RECREATIONAL DESIGN • LAND PLANNING
5314 S. YALE AVE., SUITE 710, TULSA, OK 74135
918.628.1255 918.628.1256 FAX
WWW.PLANNINGDESIGNGROUP.COM

gsb inc
3555 NW 58TH Street
Suite 700-W
Oklahoma City, OK 73112
T: 405.848.9549
F: 405.848.9783
www.gsb-inc.com

Copyright ©2022 GSB, Inc

STATE OF OKLAHOMA
1157
LICENSED ARCHITECT
06-03-22

Certificate of Authority No. CA-02114
Expires: June 30,2023

PROJECT INFORMATION

PROJECT ADDRESS:

1001 E. ROBINSON ST.,
NORMAN, OKLAHOMA 73071

PROJECT NO.	171511A
DATE	06/03/22
DRAWN BY	CHECKED BY

GRIFFIN SOCCER COMPLEX
PHASE 6
NORMAN, OKLAHOMA

ISSUE/ REVISIONS

NO.	DATE	DESCRIPTION

OWNER:
THE CITY OF NORMAN PARKS & RECREATION
201-C WEST GRAY
NORMAN, OK 73069
(405) 366-5472

REFLECTED CEILING PLAN

A2.10R

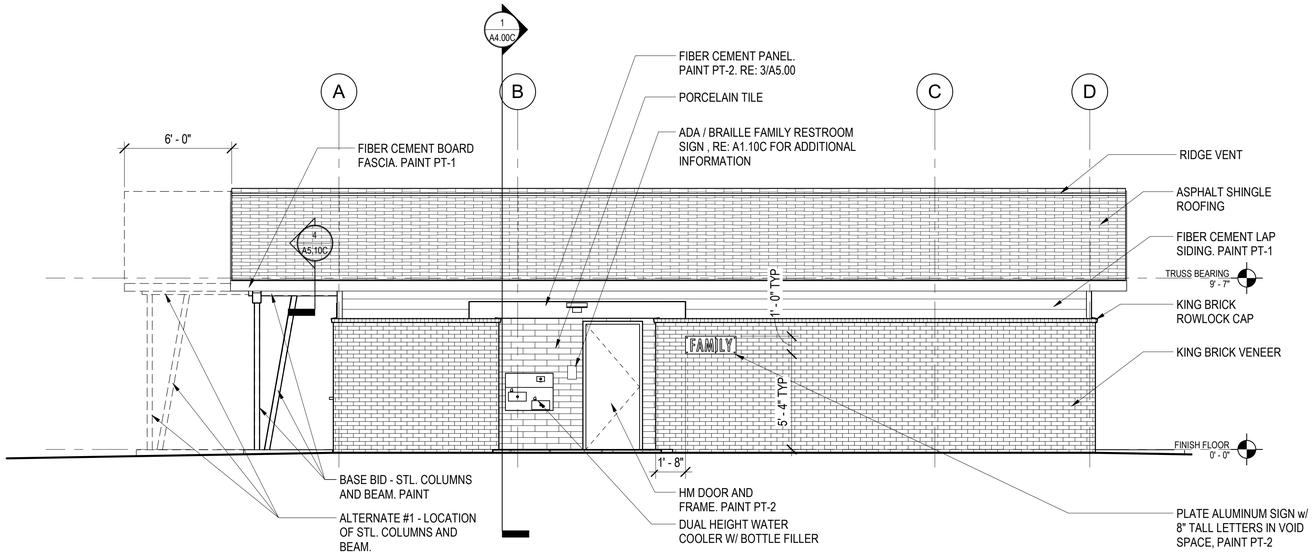

3 A3.00C WEST ELEVATION
1/4" = 1'-0"

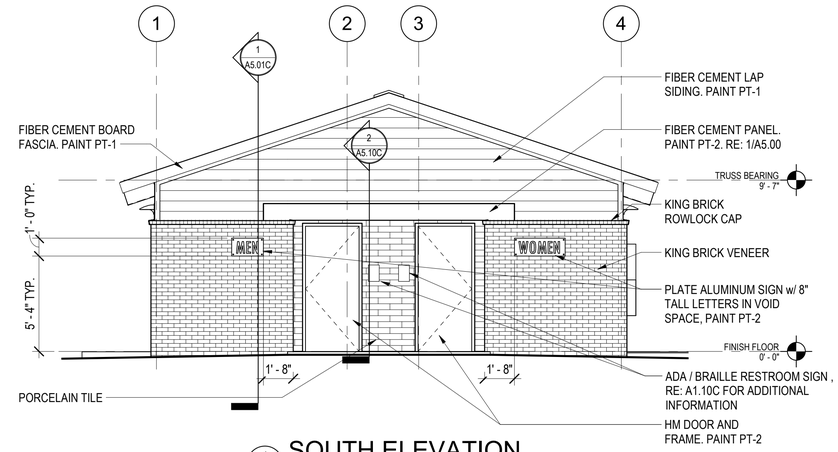

1 A3.00C SOUTH ELEVATION
1/4" = 1'-0"

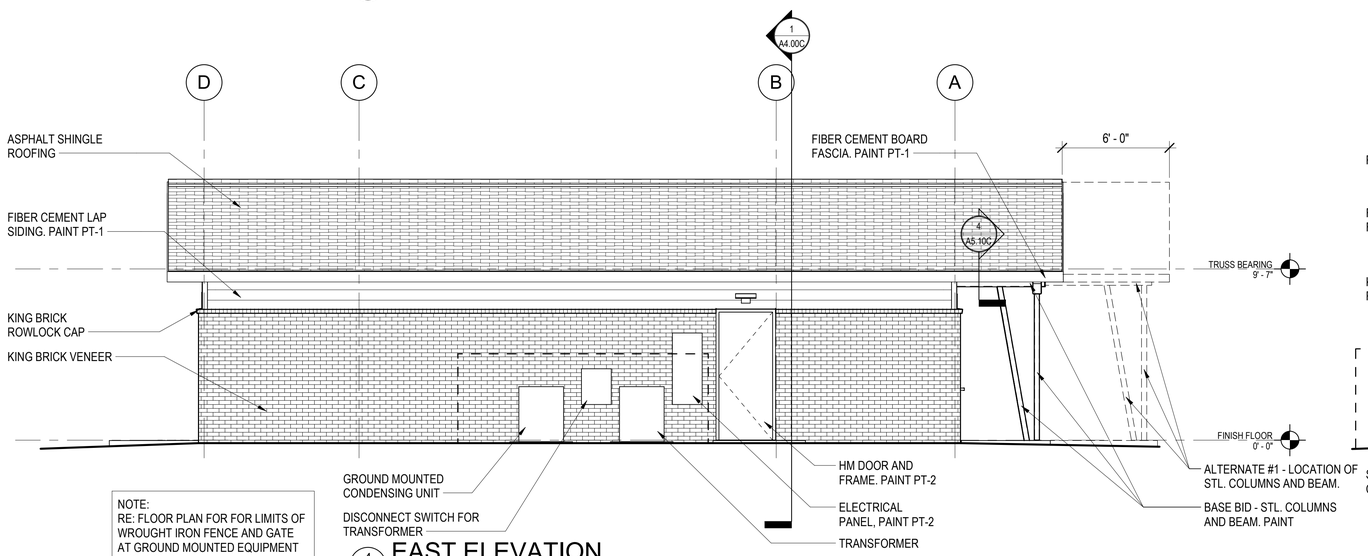

NOTE:
RE: FLOOR PLAN FOR FOR LIMITS OF WROUGHT IRON FENCE AND GATE AT GROUND MOUNTED EQUIPMENT ENCLOSURE

4 A3.00C EAST ELEVATION
1/4" = 1'-0"

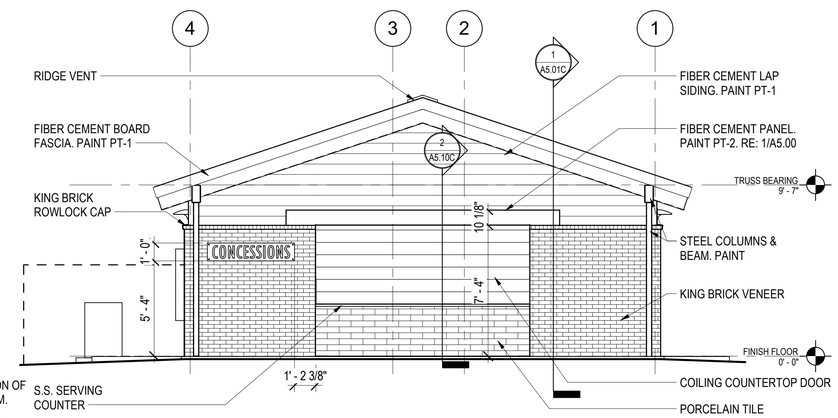

2 A3.00C NORTH ELEVATION
1/4" = 1'-0"

BID SET

PDG
PLANNING DESIGN GROUP
LANDSCAPE ARCHITECTURE ■
RECREATIONAL DESIGN ■ LAND PLANNING
5314 S. YALE AVE., SUITE 710, TULSA, OK 74135
918.628.1255 918.628.1256 FAX
WWW.PLANNINGDESIGNGROUP.COM

gsb inc
3555 NW 58TH Street
Suite 700-W
Oklahoma City, OK 73112
T: 405.848.9549
F: 405.848.9783
www.gsb-inc.com
Copyright ©2022 GSB, Inc

STATE OF OKLAHOMA
DAVID G. SAY
1157
06-03-22
LICENSED ARCHITECT

Certificate of Authority No. CA-02114
Expires: June 30,2023

PROJECT INFORMATION

PROJECT ADDRESS:

1001 E. ROBINSON ST.,
NORMAN, OKLAHOMA 73071

PROJECT NO.	171511A
DATE	06/03/22
DRAWN BY	CHECKED BY

GRIFFIN SOCCER COMPLEX
PHASE 6
NORMAN, OKLAHOMA

ISSUE/ REVISIONS

NO.	DATE	DESCRIPTION

OWNER:
THE CITY OF NORMAN PARKS & RECREATION
201-C WEST GRAY
NORMAN, OK 73069
(405) 366-5472

EXTERIOR ELEVATIONS

A3.00C

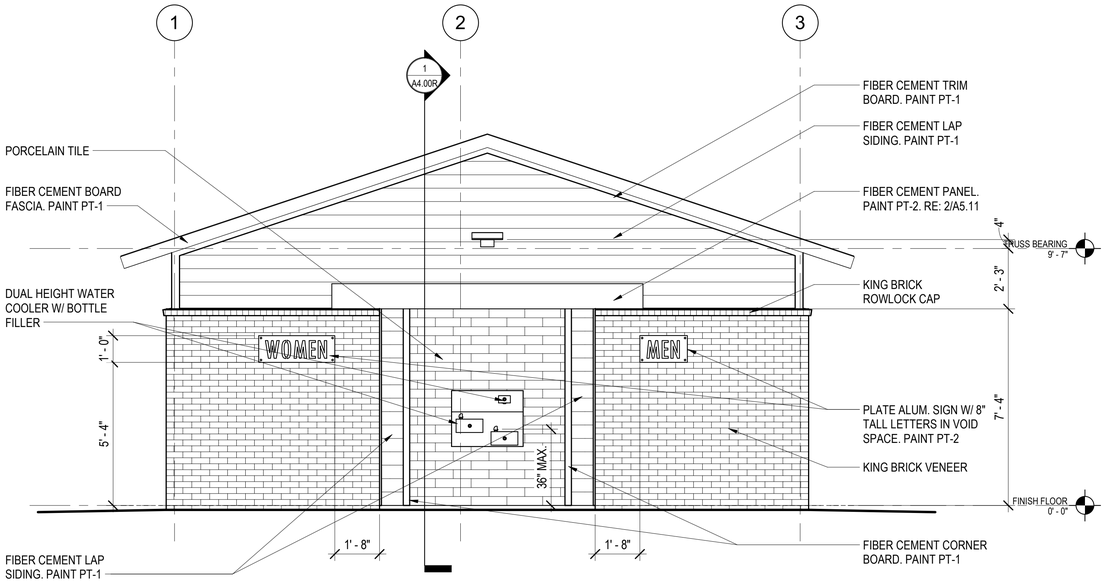

2 A3.00R PLAN SOUTH ELEVATION
3/8" = 1'-0"

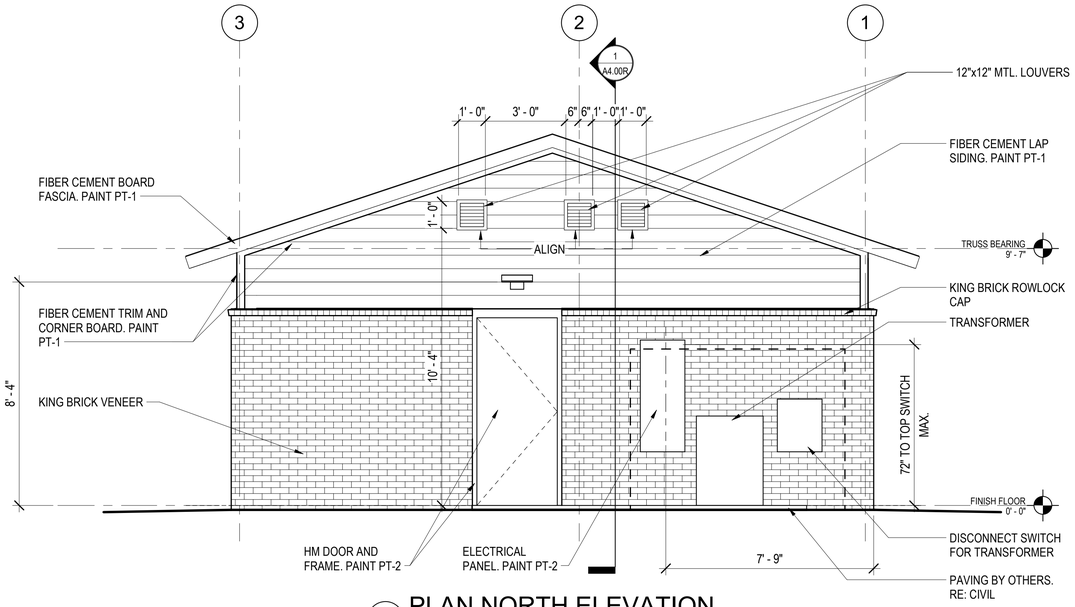

1 A3.00R PLAN NORTH ELEVATION
3/8" = 1'-0"

NOTE:
RE: FLOOR PLAN FOR FOR LIMITS OF WROUGHT IRON FENCE AND GATE AT GROUND MOUNTED EQUIPMENT ENCLOSURE

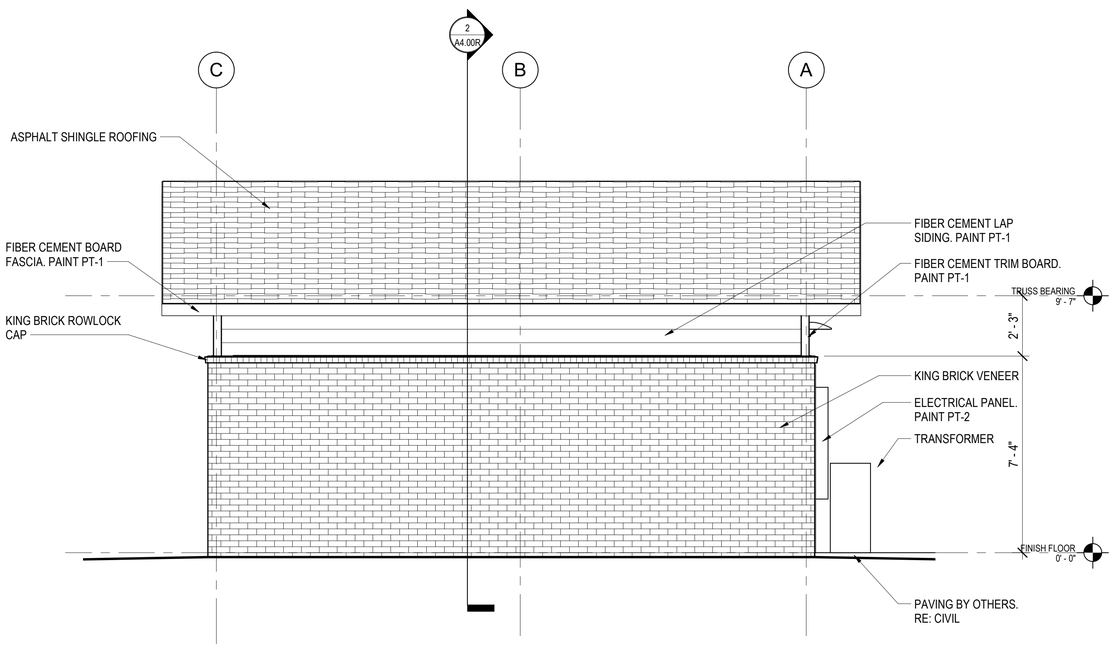

4 A3.00R PLAN EAST ELEVATION
3/8" = 1'-0"

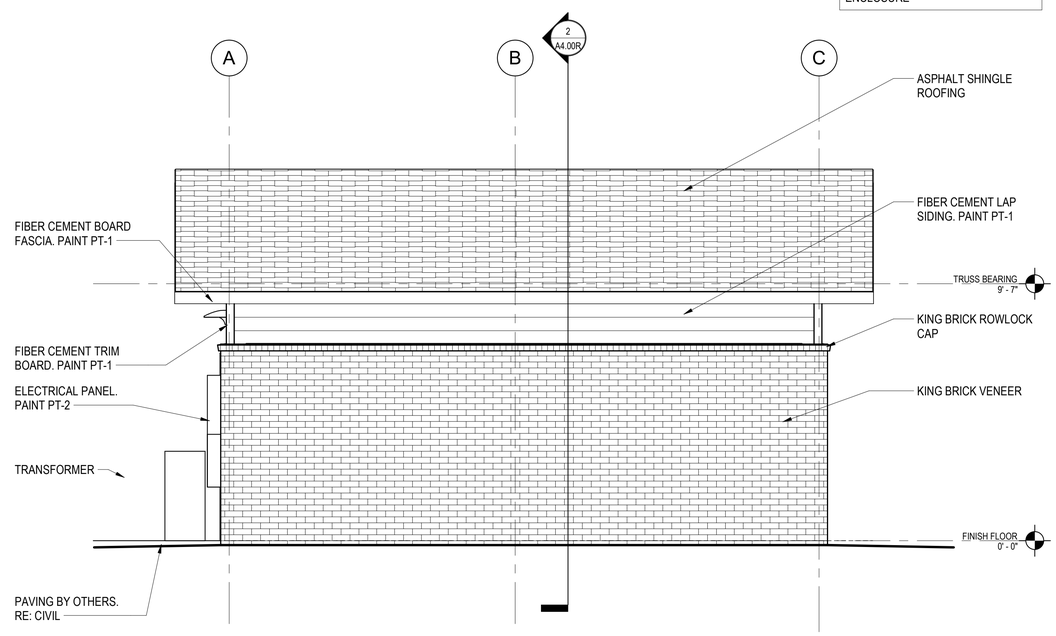

3 A3.00R PLAN WEST ELEVATION
3/8" = 1'-0"

BID SET

PDG
PLANNING DESIGN GROUP
LANDSCAPE ARCHITECTURE • RECREATIONAL DESIGN • LAND PLANNING
5314 S. YALE AVE., SUITE 710, TULSA, OK 74135
918.628.1255 918.628.1256 FAX
WWW.PLANNINGDESIGNGROUP.COM

gsb inc
3555 NW 58TH Street
Suite 700-W
Oklahoma City, OK 73112
T: 405.848.9549
F: 405.848.9783
www.gsb-inc.com

Copyright ©2022 GSB, Inc

STATE OF OKLAHOMA
LICENSED ARCHITECT
06/03/22

Certificate of Authority No. CA-02114
Expires: June 30,2023

PROJECT INFORMATION

PROJECT ADDRESS:

1001 E. ROBINSON ST.,
NORMAN, OKLAHOMA 73071

PROJECT NO.	171511A
DATE	06/03/22
DRAWN BY	CHECKED BY

GRIFFIN SOCCER COMPLEX
PHASE 6
NORMAN, OKLAHOMA

ISSUE/ REVISIONS

NO.	DATE	DESCRIPTION

OWNER:
THE CITY OF NORMAN PARKS & RECREATION
201-C WEST GRAY
NORMAN, OK 73069
(405) 366-5472

EXTERIOR ELEVATIONS

A3.00R

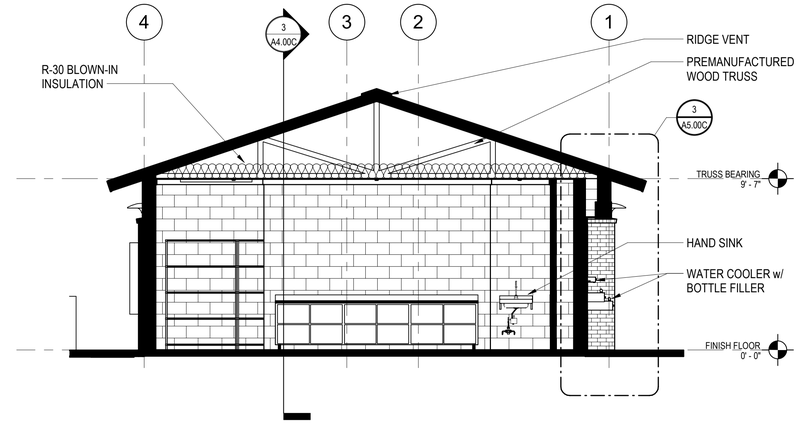

1 A4.00C BUILDING SECTION #1
1/4" = 1'-0"

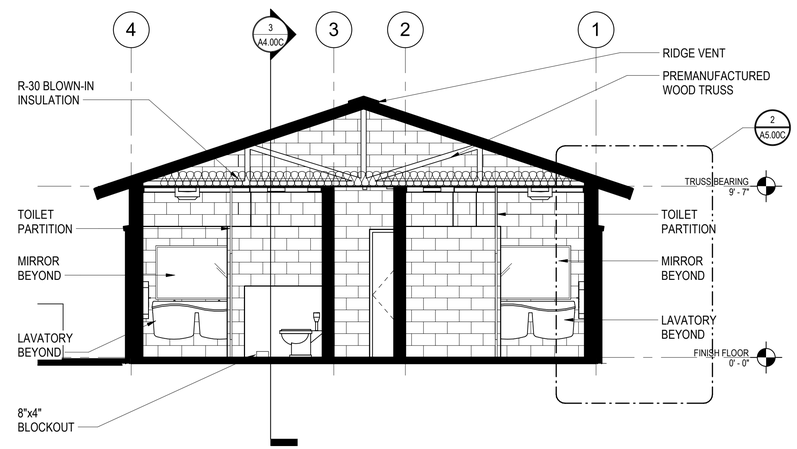

2 A4.00C BUILDING SECTION #2
1/4" = 1'-0"

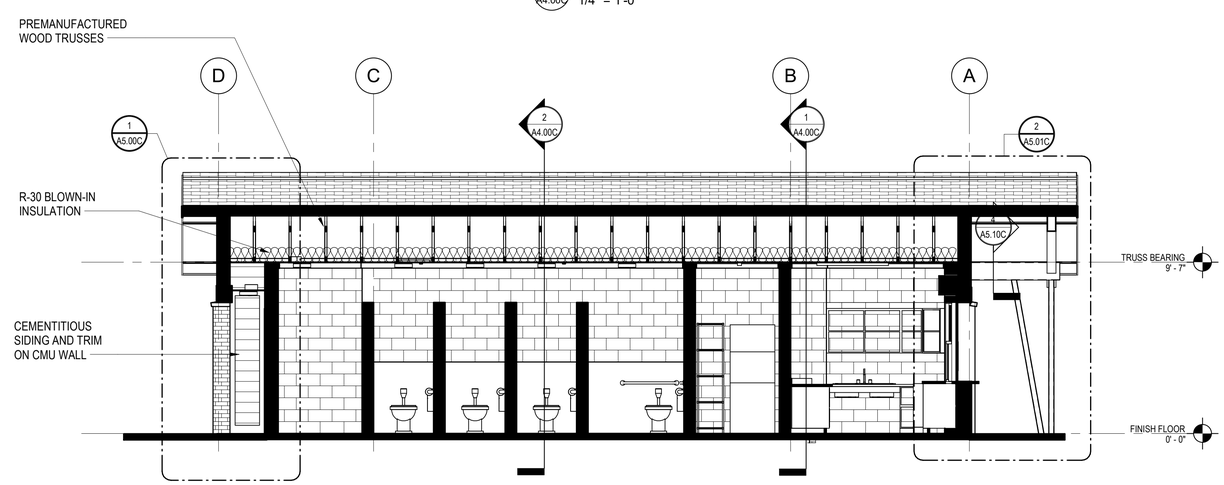

3 A4.00C BUILDING SECTION #3
1/4" = 1'-0"

BID SET

PDG
PLANNING DESIGN GROUP
LANDSCAPE ARCHITECTURE ● RECREATIONAL DESIGN ● LAND PLANNING
5314 S. YALE AVE., SUITE 710, TULSA, OK 74135
918.628.1255 918.628.1256 FAX
WWW.PLANNINGDESIGNGROUP.COM

gsb inc
3555 NW 58TH Street
Suite 700-W
Oklahoma City, OK 73112
T: 405.848.9549
F: 405.848.9783
www.gsb-inc.com
Copyright ©2022 GSB, Inc

STATE OF OKLAHOMA
RICHARD G. SHEPHERD
1157
LICENSED ARCHITECT
06-03-22

Certificate of Authority No. CA-02114
Expires: June 30,2023

PROJECT INFORMATION

PROJECT ADDRESS:

1001 E. ROBINSON ST.,
NORMAN, OKLAHOMA 73071

PROJECT NO.	171511A
DATE	06/03/22
DRAWN BY	CHECKED BY

GRIFFIN SOCCER COMPLEX
PHASE 6
NORMAN, OKLAHOMA

ISSUE/ REVISIONS

NO.	DATE	DESCRIPTION

OWNER:
THE CITY OF NORMAN PARKS & RECREATION
201-C WEST GRAY
NORMAN, OK 73069
(405) 366-5472

BUILDING SECTIONS

A4.00C

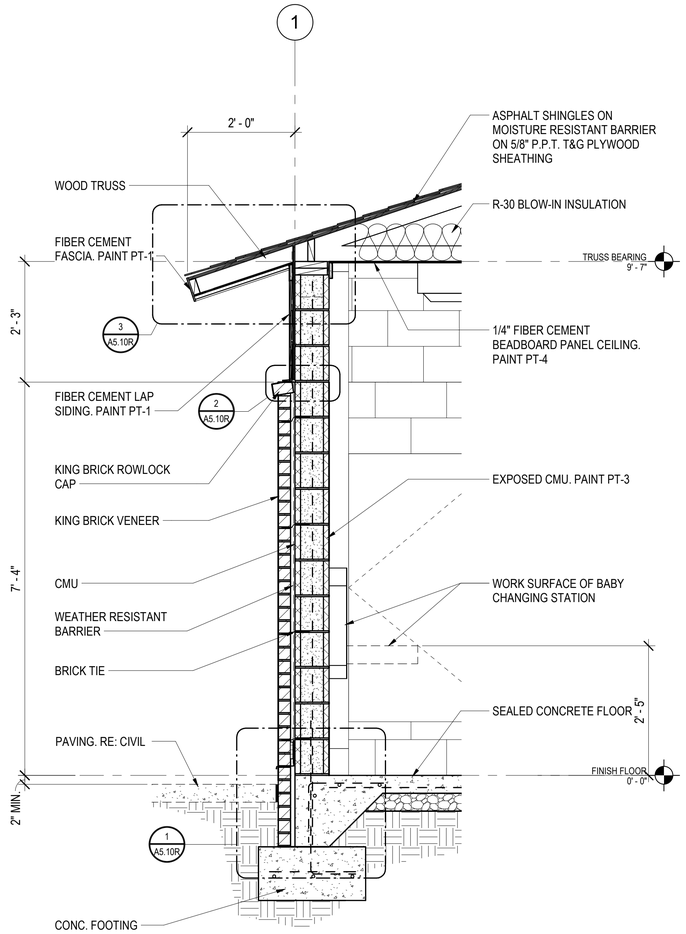

3 A4.00R WALL SECTION @ EAVE
3/4" = 1'-0"

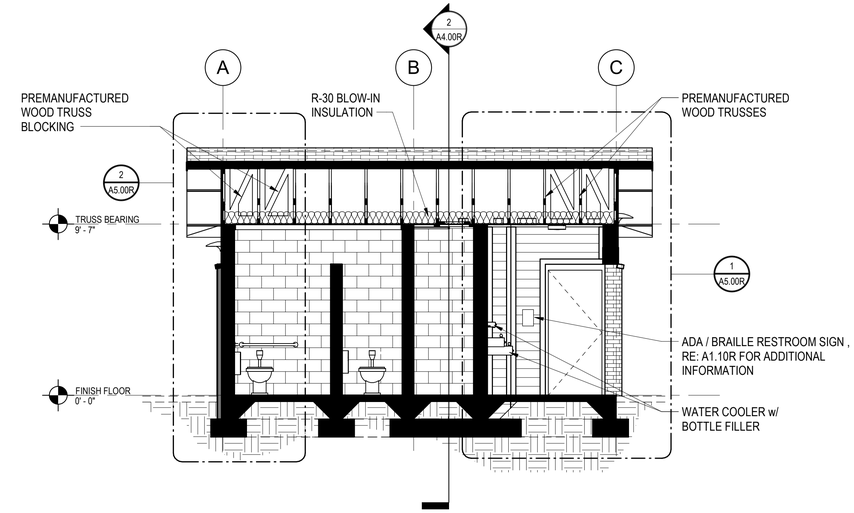

1 A4.00R BUILDING SECTION #1
1/4" = 1'-0"

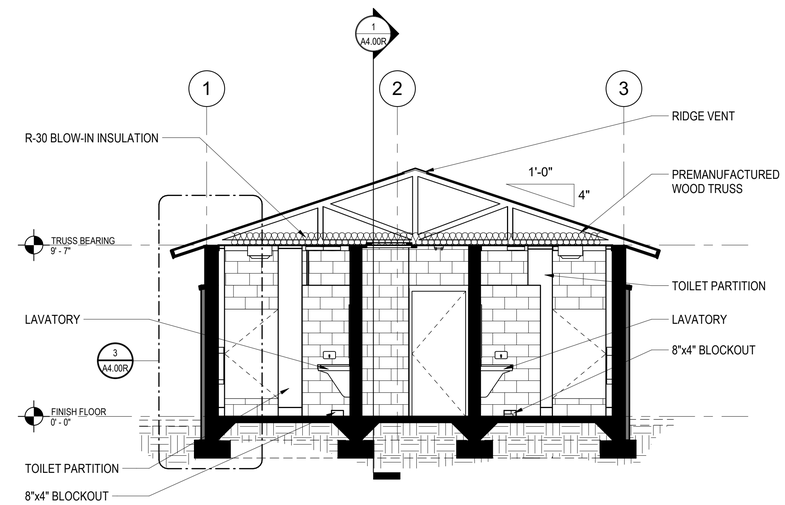

2 A4.00R BUILDING SECTION #2
1/4" = 1'-0"

PDG
PLANNING DESIGN GROUP
LANDSCAPE ARCHITECTURE • RECREATIONAL DESIGN • LAND PLANNING
5314 S. YALE AVE., SUITE 710, TULSA, OK 74135
918.628.1255 918.628.1256 FAX
WWW.PLANNINGDESIGNGROUP.COM

gsb inc
3555 NW 58TH Street
Suite 700-W
Oklahoma City, OK 73112
T: 405.848.9549
F: 405.848.9783
www.gsb-inc.com
Copyright ©2022 GSB, Inc

STATE OF OKLAHOMA
RONALD G. SHAW
11371
06-03-22
LICENSED ARCHITECT

Certificate of Authority No. CA-02114
Expires: June 30,2023

PROJECT INFORMATION

PROJECT ADDRESS:

1001 E. ROBINSON ST.,
NORMAN, OKLAHOMA 73071

PROJECT NO.	171511A
DATE	06/03/22
DRAWN BY	CHECKED BY

GRIFFIN SOCCER COMPLEX
PHASE 6
NORMAN, OKLAHOMA

ISSUE/ REVISIONS

NO.	DATE	DESCRIPTION

OWNER:
THE CITY OF NORMAN PARKS & RECREATION
201-C WEST GRAY
NORMAN, OK 73069
(405) 366-5472

BUILDING SECTIONS & WALL SECTION

A4.00R

BID SET

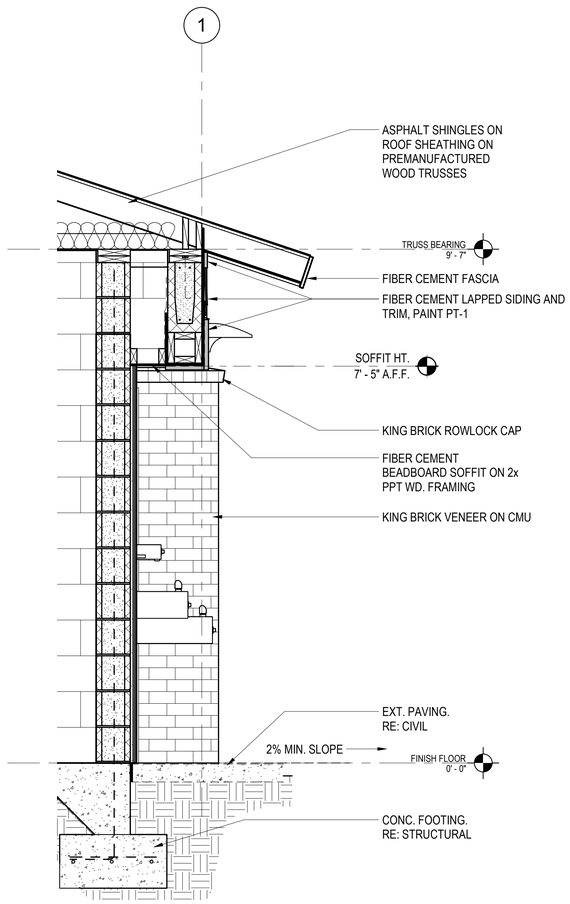

3 A5.00C WALL SECTION @ FAMILY RESTROOM
3/4" = 1'-0"

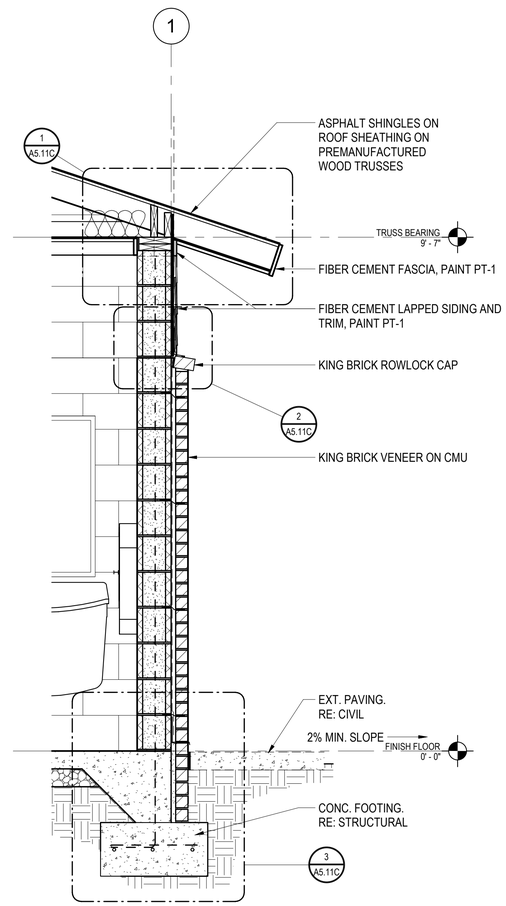

2 A5.00C WALL SECTION @ MENS RESTROOM
3/4" = 1'-0"

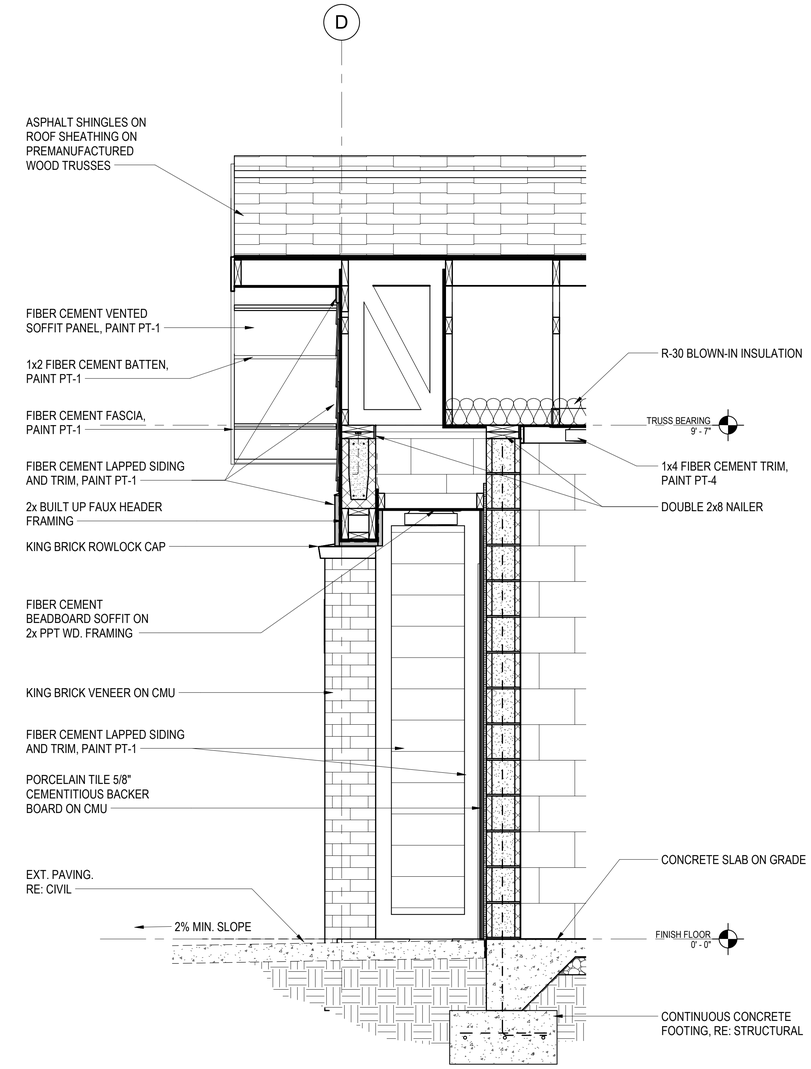

1 A5.00C WALL SECTION @ RESTROOM ENTRANCE
3/4" = 1'-0"

BID SET

PDG
PLANNING DESIGN GROUP
LANDSCAPE ARCHITECTURE • RECREATIONAL DESIGN • LAND PLANNING
5314 S. YALE AVE., SUITE 710, TULSA, OK 74135
918.628.1255 918.628.1256 FAX
WWW.PLANNINGDESIGNGROUP.COM

gsb inc
3555 NW 58TH Street
Suite 700-W
Oklahoma City, OK 73112
T: 405.848.9549
F: 405.848.9783
www.gsb-inc.com
Copyright ©2022 GSB, Inc

STATE OF OKLAHOMA
RICHARD G. SHEPHERD
11574
LICENSED ARCHITECT
06-03-22

Certificate of Authority No. CA-02114
Expires: June 30,2023

PROJECT INFORMATION

PROJECT ADDRESS:

1001 E. ROBINSON ST.,
NORMAN, OKLAHOMA 73071

PROJECT NO.	171511A
DATE	06/03/22
DRAWN BY	CHECKED BY

GRIFFIN SOCCER COMPLEX
PHASE 6
NORMAN, OKLAHOMA

ISSUE/ REVISIONS

NO.	DATE	DESCRIPTION

OWNER:
THE CITY OF NORMAN PARKS & RECREATION
201-C WEST GRAY
NORMAN, OK 73069
(405) 366-5472

WALL SECTIONS

A5.00C

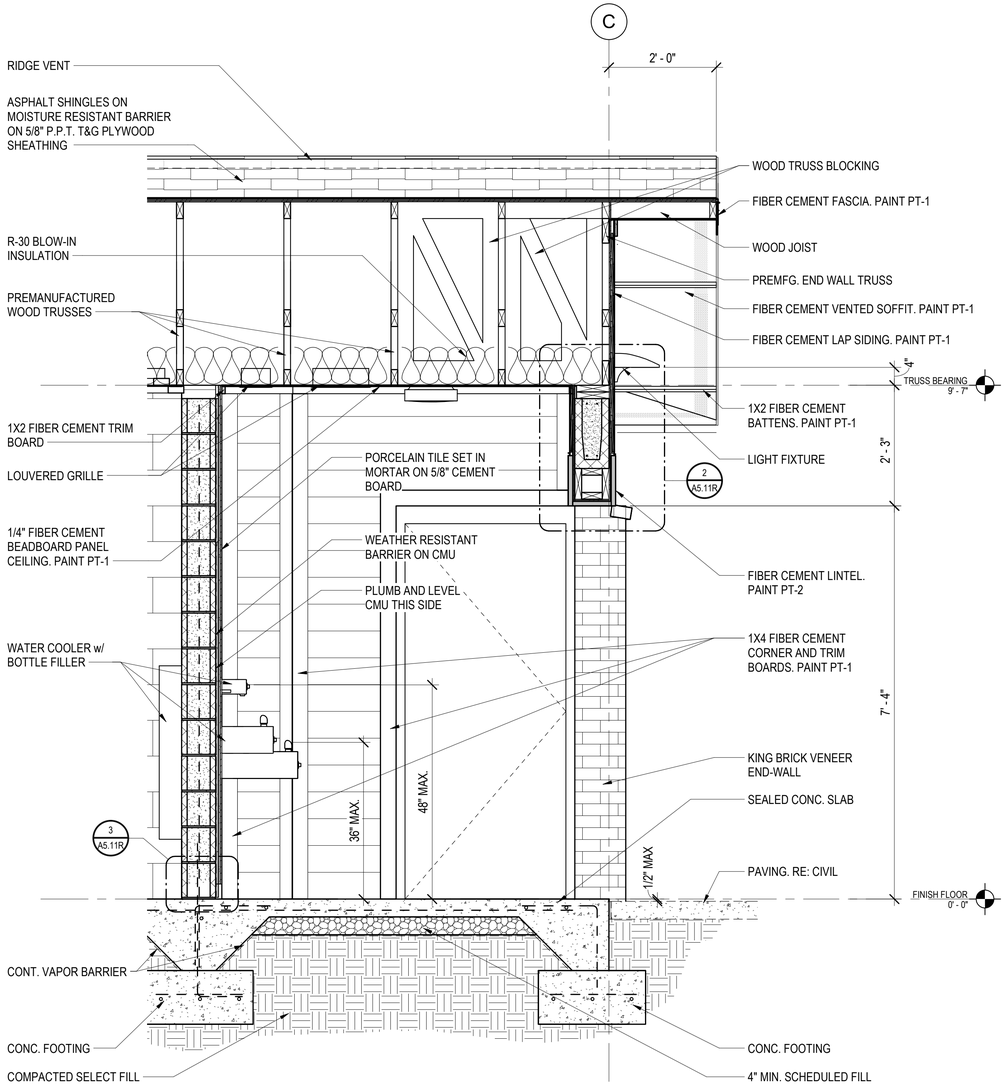

1 A5.00R WALL SECTION THRU COVERED ENTRY
3/4" = 1'-0"

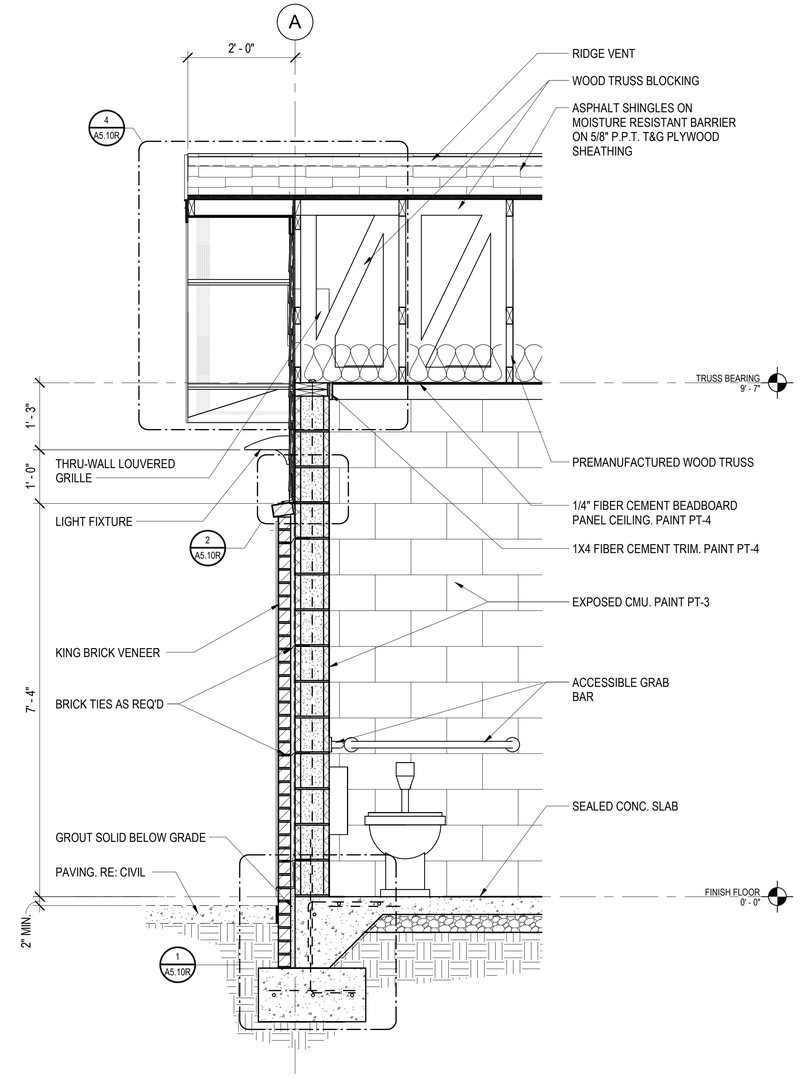

2 A5.00R WALL SECTION @ GABLE END
3/4" = 1'-0"

BID SET

PDG
PLANNING DESIGN GROUP
LANDSCAPE ARCHITECTURE ■ RECREATIONAL DESIGN ■ LAND PLANNING
5314 S. YALE AVE., SUITE 710, TULSA, OK 74135
918.628.1255 918.628.1256 FAX
WWW.PLANNINGDESIGNGROUP.COM

gsb inc
3555 NW 58TH Street
Suite 700-W
Oklahoma City, OK 73112
T: 405.848.9549
F: 405.848.9783
www.gsb-inc.com
Copyright ©2022 GSB, Inc

STATE OF OKLAHOMA
JOSHUA D. GRAY
1157
06-03-22
LICENSED ARCHITECT

Certificate of Authority No. CA-02114
Expires: June 30,2023

PROJECT INFORMATION

PROJECT ADDRESS:
1001 E. ROBINSON ST.,
NORMAN, OKLAHOMA 73071

PROJECT NO.	171511A
DATE	06/03/22
DRAWN BY	CHECKED BY

GRIFFIN SOCCER COMPLEX
PHASE 6
NORMAN, OKLAHOMA

ISSUE/ REVISIONS

NO.	DATE	DESCRIPTION

OWNER:
THE CITY OF NORMAN PARKS & RECREATION
201-C WEST GRAY
NORMAN, OK 73069
(405) 366-5472

WALL SECTIONS

A5.00R

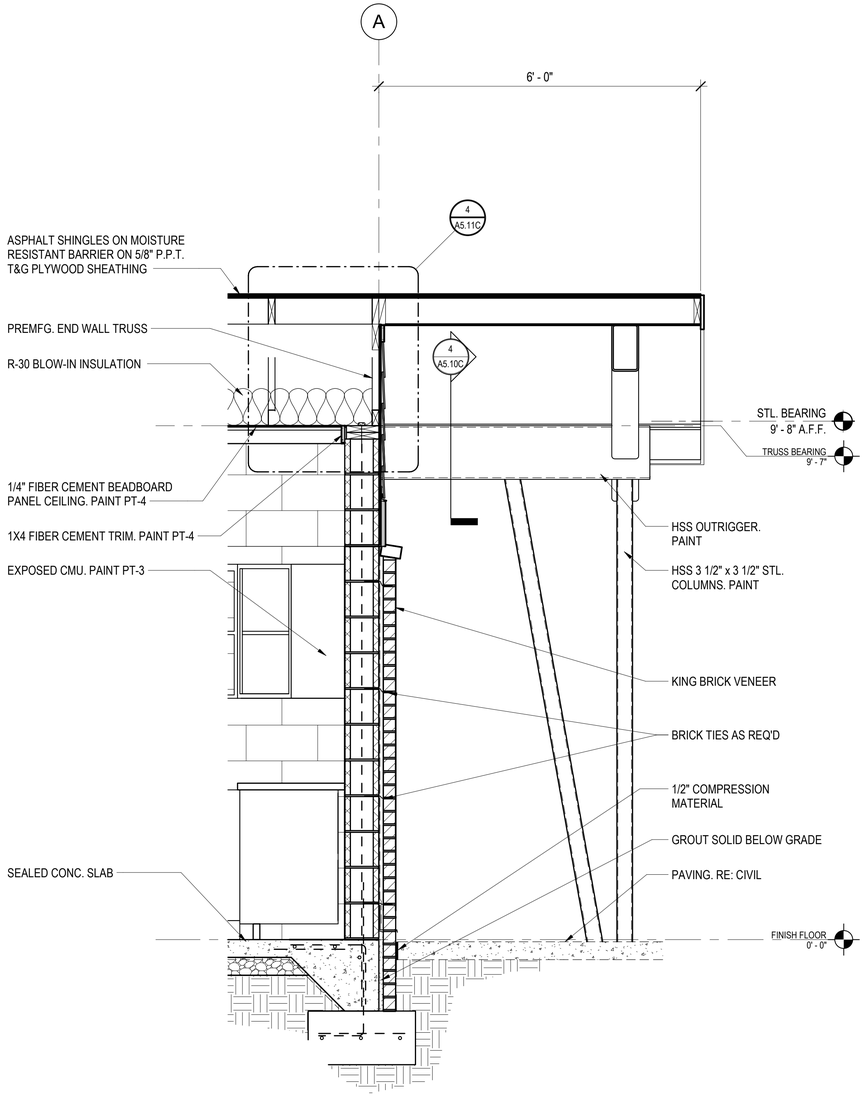

1 A5.01C WALL SECTION @ CONCESSION STAND
3/4" = 1'-0"

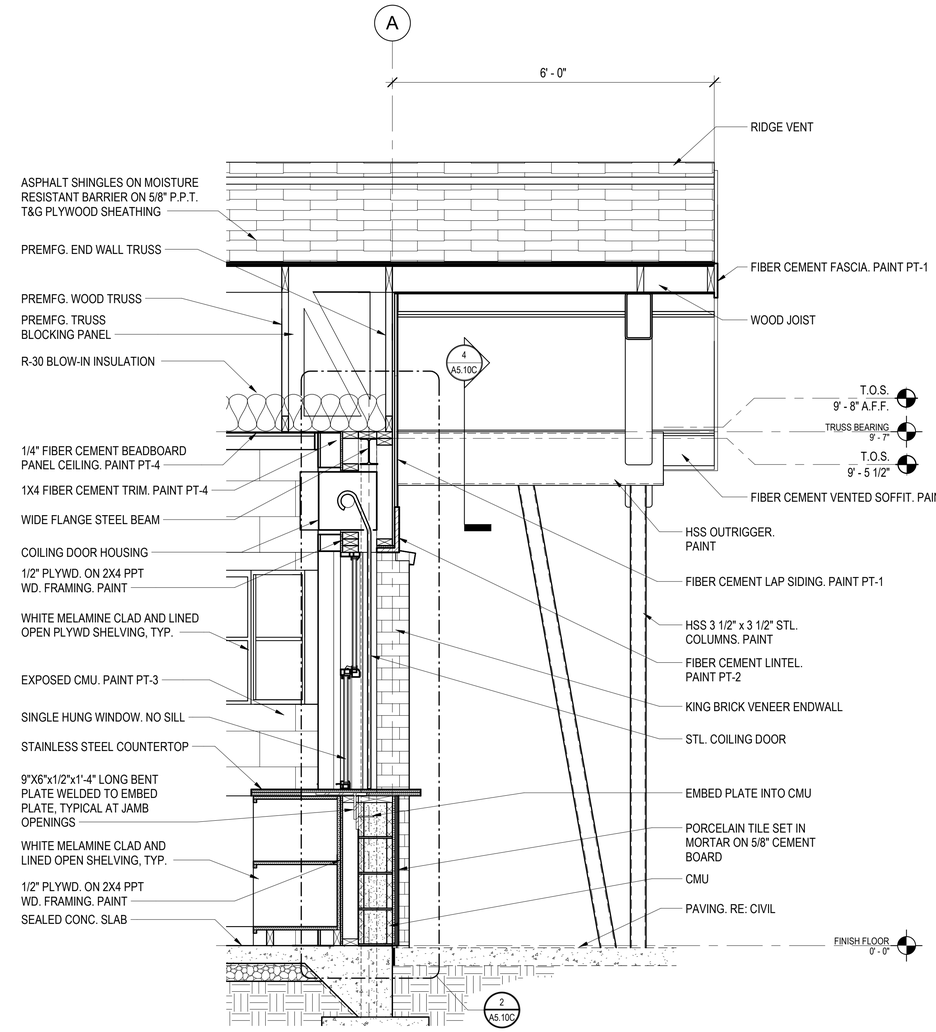

2 A5.01C WALL SECTION @ CONCESSION STAND WINDOW
3/4" = 1'-0"

PDG
PLANNING DESIGN GROUP
LANDSCAPE ARCHITECTURE ■ RECREATIONAL DESIGN ■ LAND PLANNING
5314 S. YALE AVE., SUITE 710, TULSA, OK 74135
918.628.1255 918.628.1256 FAX
WWW.PLANNINGDESIGNGROUP.COM

gsb
3555 NW 58TH Street
Suite 700-W
Oklahoma City, OK 73112
T: 405.848.9549
F: 405.848.9783
www.gsb-inc.com
Copyright ©2022 GSB, Inc

STATE OF OKLAHOMA
JOSEPH G. SCHAFER
11577
06-03-22
LICENSED ARCHITECT
Certificate of Authority No. CA-02114
Expires: June 30,2023

PROJECT INFORMATION

PROJECT ADDRESS:
1001 E. ROBINSON ST.,
NORMAN, OKLAHOMA 73071

PROJECT NO.	171511A
DATE	06/03/22
DRAWN BY	CHECKED BY

GRIFFIN SOCCER COMPLEX
PHASE 6
NORMAN, OKLAHOMA

ISSUE/ REVISIONS

NO.	DATE	DESCRIPTION

OWNER:
THE CITY OF NORMAN PARKS & RECREATION
201-C WEST GRAY
NORMAN, OK 73069
(405) 366-5472

BID SET

WALL SECTIONS

A5.01C

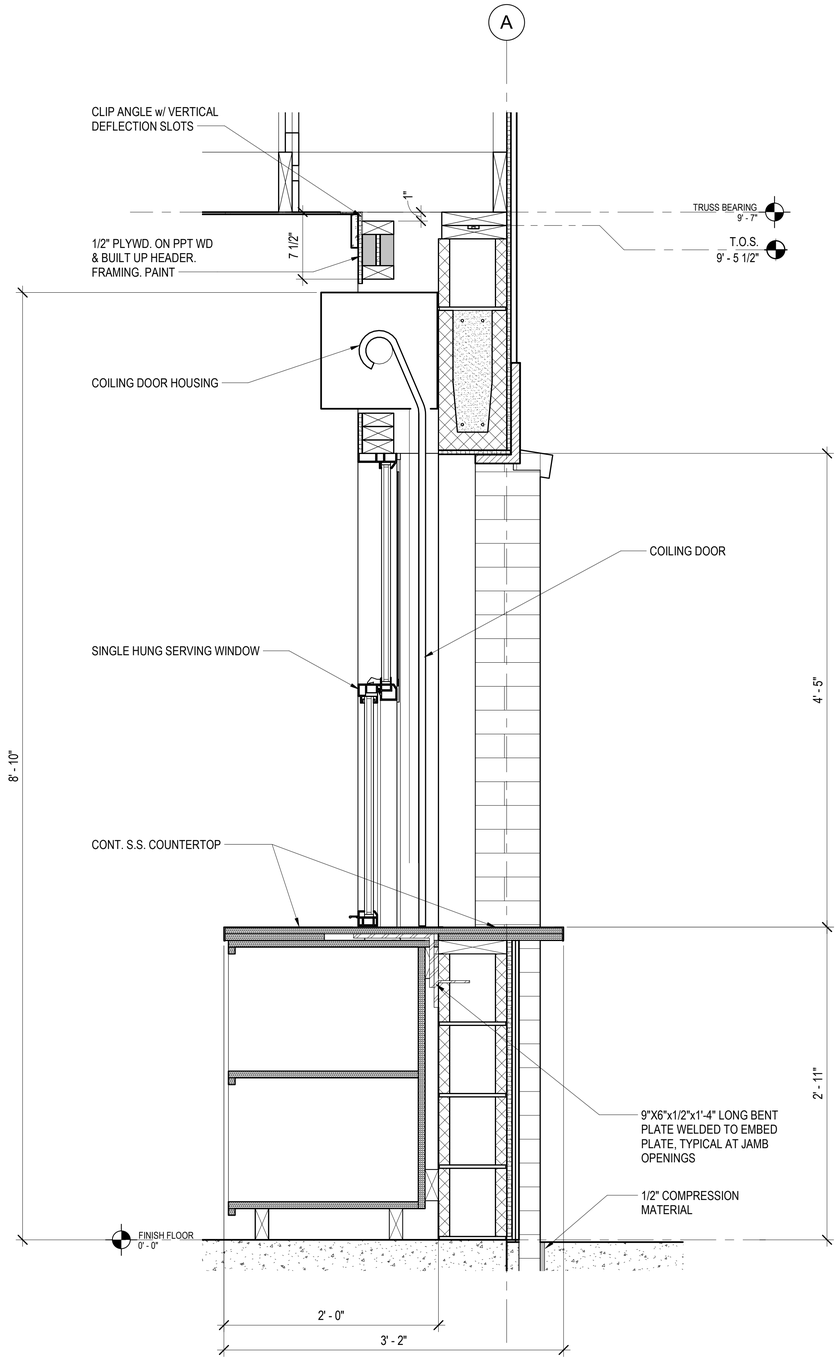

2 A5.10C WALL SECTION @ SERVING WINDOW
1 1/2" = 1'-0"

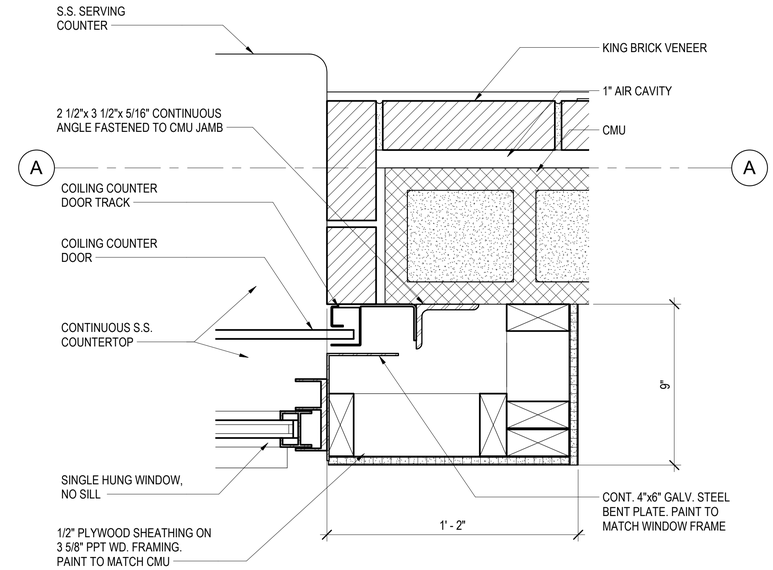

3 A5.10C SERVING WINDOW JAMB DETAIL
3" = 1'-0"

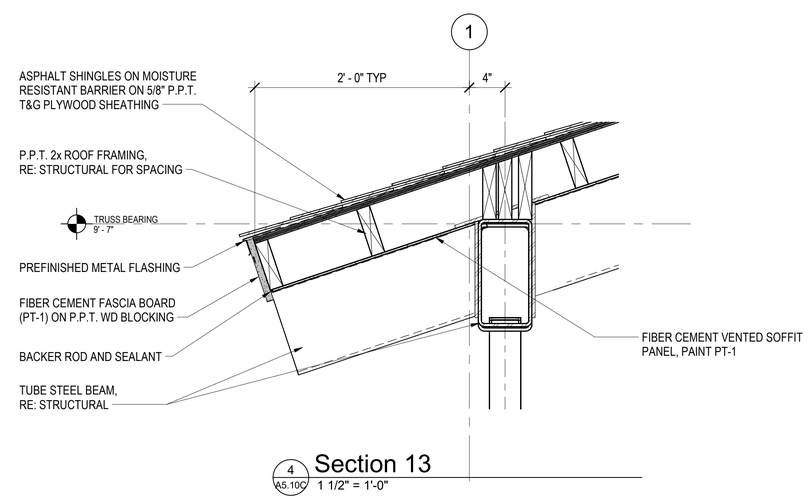

4 A5.10C Section 13
1 1/2" = 1'-0"

PDG
PLANNING DESIGN GROUP
LANDSCAPE ARCHITECTURE • RECREATIONAL DESIGN • LAND PLANNING
5314 S. YALE AVE., SUITE 710, TULSA, OK 74135
918.628.1255 918.628.1256 FAX
WWW.PLANNINGDESIGNGROUP.COM

gsb inc
3555 NW 58TH Street
Suite 700-W
Oklahoma City, OK 73112
T: 405.848.9549
F: 405.848.9783
www.gsb-inc.com
Copyright ©2022 GSB, Inc

STATE OF OKLAHOMA
RONALD G. SHAW
11577
06-03-22
LICENSED ARCHITECT

Certificate of Authority No. CA-02114
Expires: June 30,2023

PROJECT INFORMATION

PROJECT ADDRESS:

1001 E. ROBINSON ST.,
NORMAN, OKLAHOMA 73071

PROJECT NO.	171511A
DATE	06/03/22
DRAWN BY	CHECKED BY

GRIFFIN SOCCER COMPLEX
PHASE 6
NORMAN, OKLAHOMA

ISSUE/ REVISIONS

NO.	DATE	DESCRIPTION

OWNER:
THE CITY OF NORMAN PARKS & RECREATION
201-C WEST GRAY
NORMAN, OK 73069
(405) 366-5472

DETAILS

A5.10C

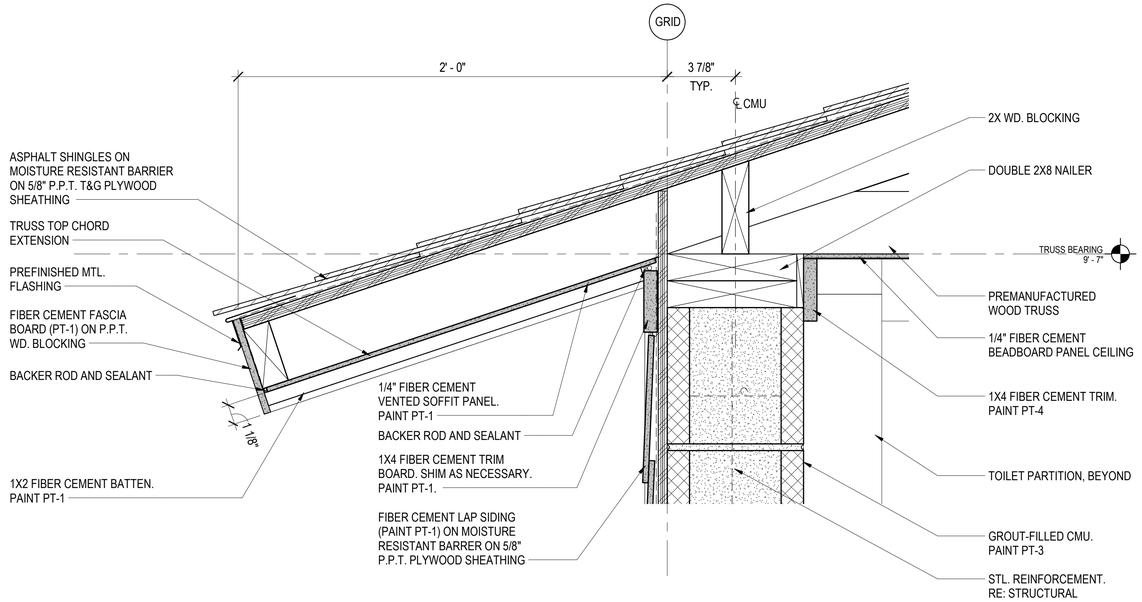

3 A5.10R EAVE & GUTTER DETAIL
3" = 1'-0"

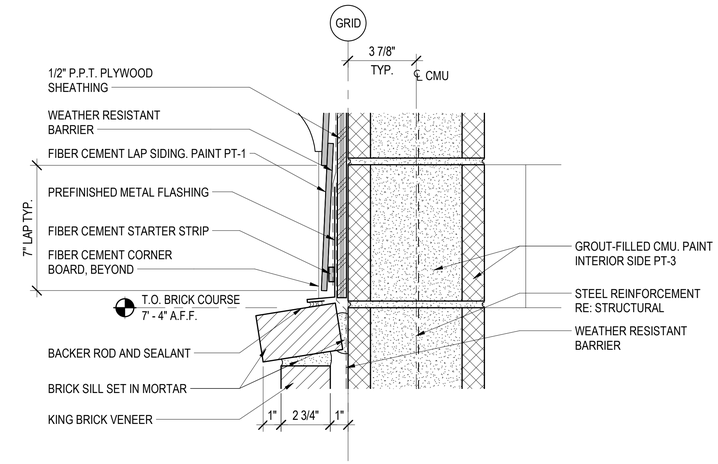

2 A5.10R FLASHING DETAIL @ ROWLOCK CAP
3" = 1'-0"

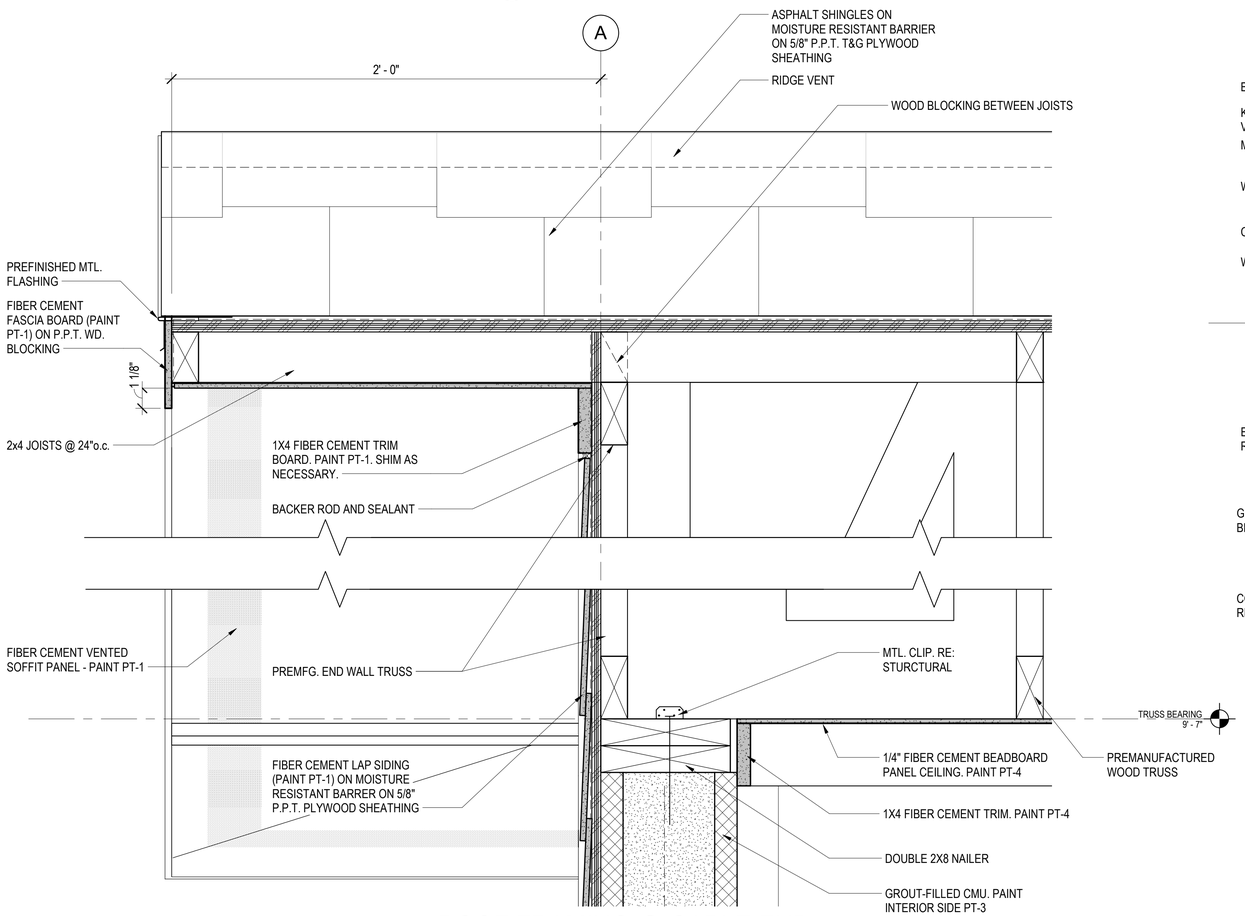

4 A5.10R ROOF FRAMING @ GABLE END
3" = 1'-0"

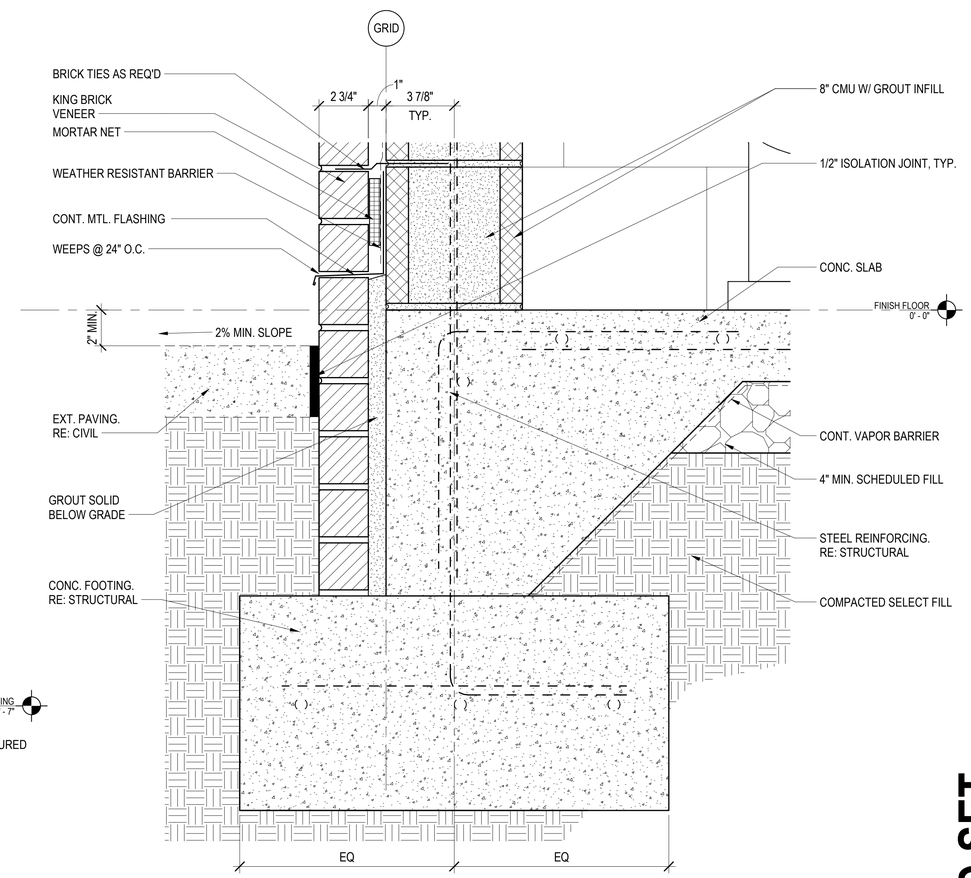

1 A5.10R TYPICAL FOOTING DETAIL
3" = 1'-0"

PDG
PLANNING DESIGN GROUP
LANDSCAPE ARCHITECTURE ■ RECREATIONAL DESIGN ■ LAND PLANNING
5314 S. YALE AVE., SUITE 710, TULSA, OK 74135
918.628.1255 918.628.1256 FAX
WWW.PLANNINGDESIGNGROUP.COM

gsb inc. Architects Planners
3555 NW 58TH Street
Suite 700-W
Oklahoma City, OK 73112
T: 405.848.9549
F: 405.848.9783
www.gsb-inc.com
Copyright ©2022 GSB, Inc

STATE OF OKLAHOMA 1137 REGISTERED ARCHITECT 06-03-22

Certificate of Authority No. CA-02114
Expires: June 30,2023

PROJECT INFORMATION

PROJECT ADDRESS:

1001 E. ROBINSON ST.,
NORMAN, OKLAHOMA 73071

PROJECT NO.	171511A
DATE	06/03/22
DRAWN BY	CHECKED BY

GRIFFIN SOCCER COMPLEX
PHASE 6
NORMAN, OKLAHOMA

ISSUE/ REVISIONS

NO.	DATE	DESCRIPTION

OWNER:
THE CITY OF NORMAN PARKS & RECREATION
201-C WEST GRAY
NORMAN, OK 73069
(405) 366-5472

BID SET

DETAILS

A5.10R

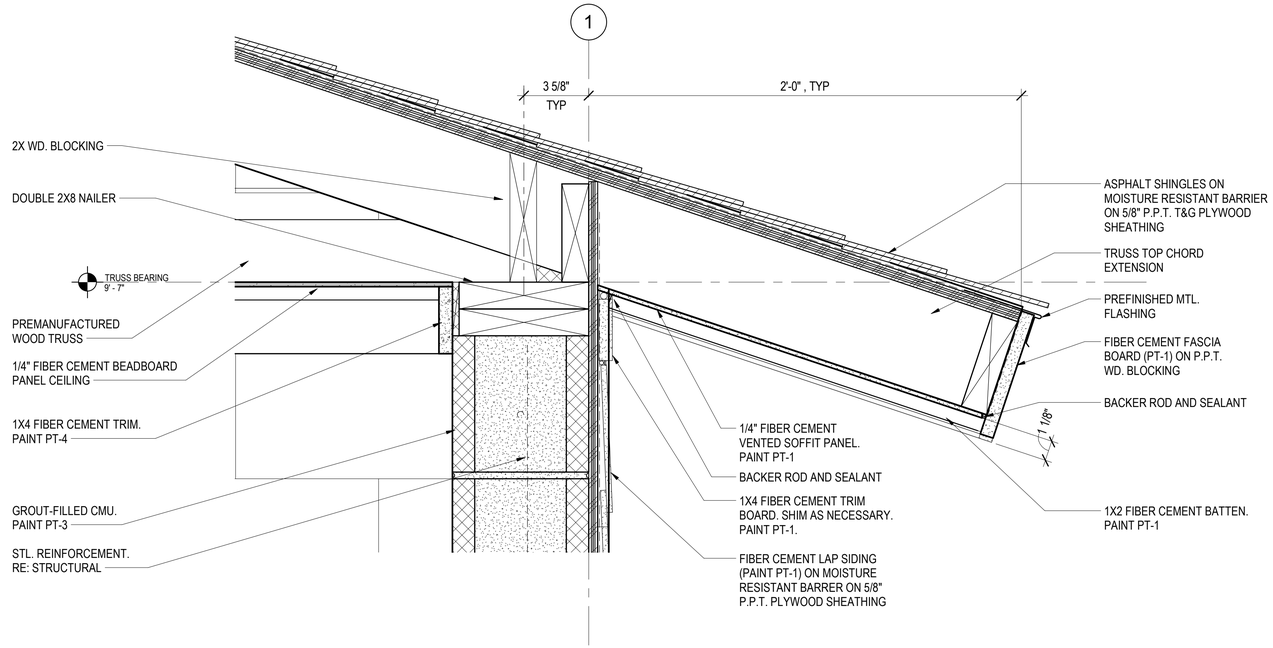

1 A5.11C **EAVE DETAIL**
3" = 1'-0"

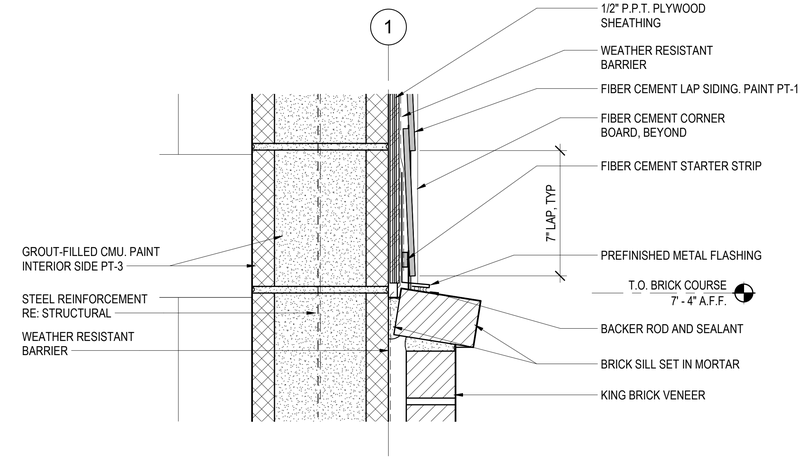

2 A5.11C **FLASHING DETAIL @ ROWLOCK CAP**
3" = 1'-0"

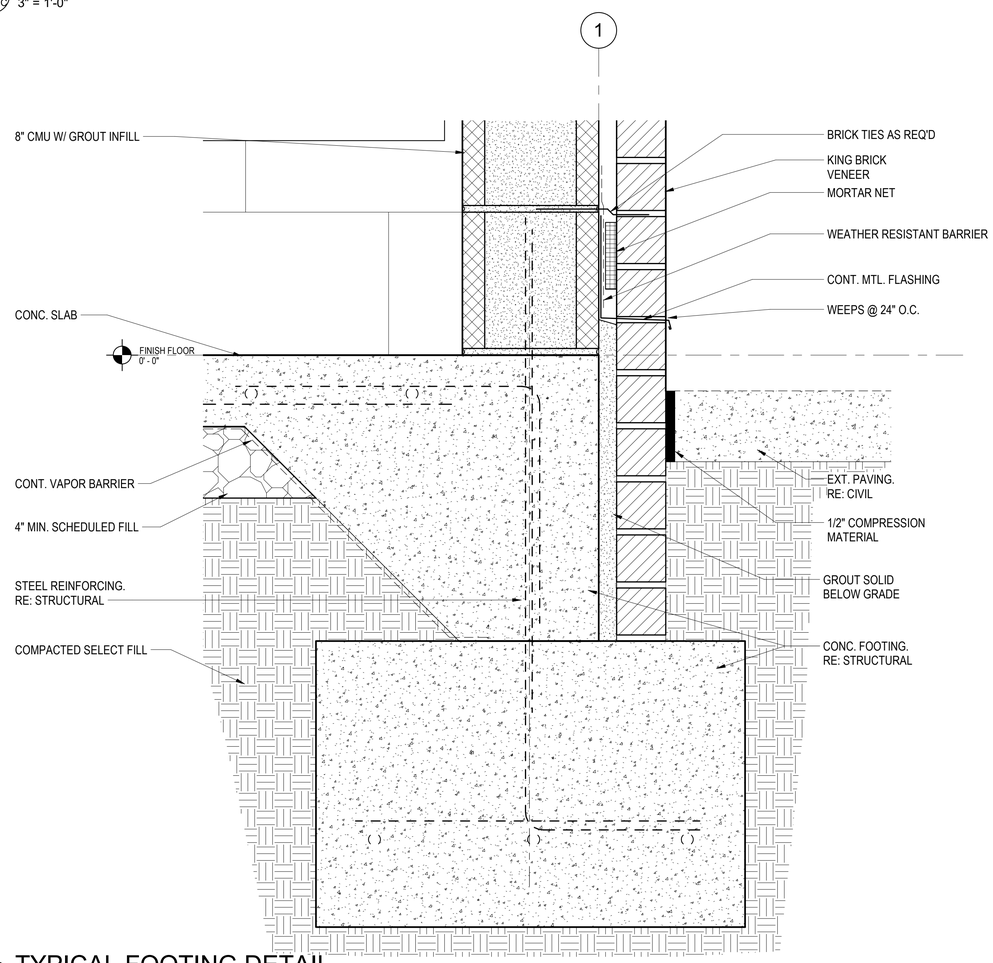

3 A5.11C **TYPICAL FOOTING DETAIL**
3" = 1'-0"

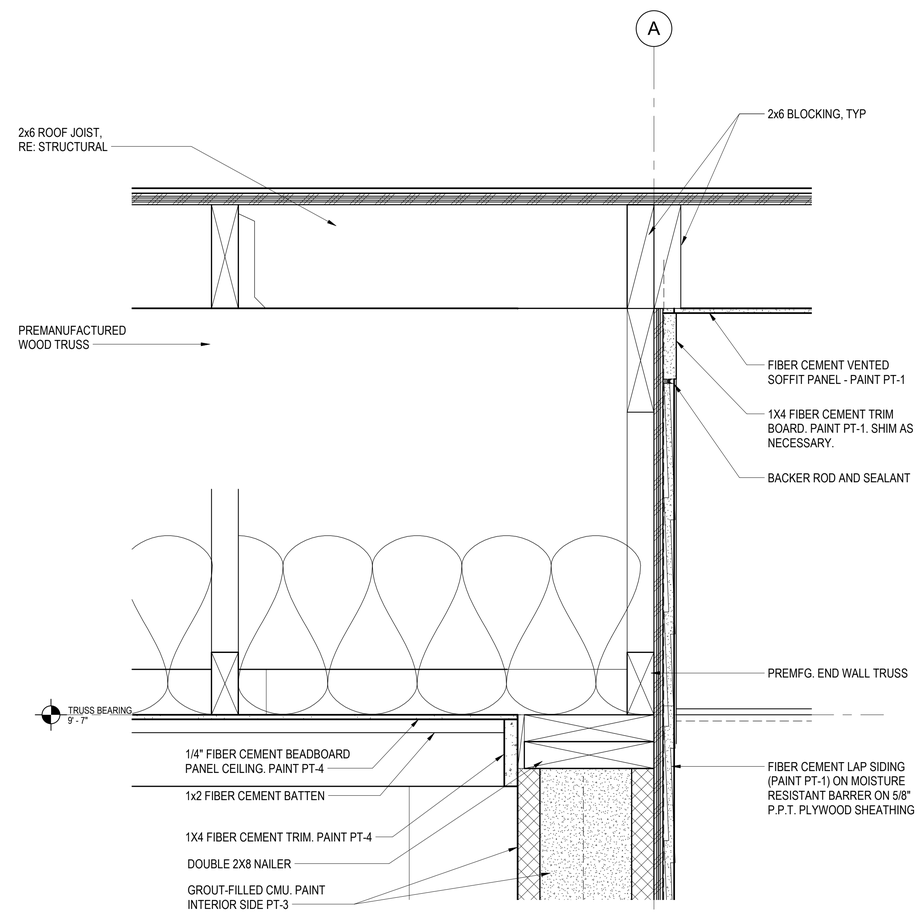

4 A5.11C **ROOF FRAMING @ GABLE END**
3" = 1'-0"

BID SET

PDG
PLANNING DESIGN GROUP
LANDSCAPE ARCHITECTURE ■
RECREATIONAL DESIGN ■ LAND PLANNING
5314 S. YALE AVE., SUITE 710, TULSA, OK 74135
918.628.1255 918.628.1256 FAX
WWW.PLANNINGDESIGNGROUP.COM

gsb inc
3555 NW 58TH Street
Suite 700-W
Oklahoma City, OK 73112
T: 405.848.9549
F: 405.848.9783
www.gsb-inc.com
Copyright ©2022 GSB, Inc

STATE OF OKLAHOMA
JASON B. GRAY
115
06-03-22
LICENSED ARCHITECT

Certificate of Authority No. CA-02114
Expires: June 30,2023

PROJECT INFORMATION

PROJECT ADDRESS:

1001 E. ROBINSON ST.,
NORMAN, OKLAHOMA 73071

PROJECT NO.	171511A
DATE	06/03/22
DRAWN BY	CHECKED BY

GRIFFIN SOCCER COMPLEX
PHASE 6
NORMAN, OKLAHOMA

ISSUE/ REVISIONS

NO.	DATE	DESCRIPTION

OWNER:
THE CITY OF NORMAN PARKS & RECREATION
201-C WEST GRAY
NORMAN, OK 73069
(405) 366-5472

DETAILS

A5.11C

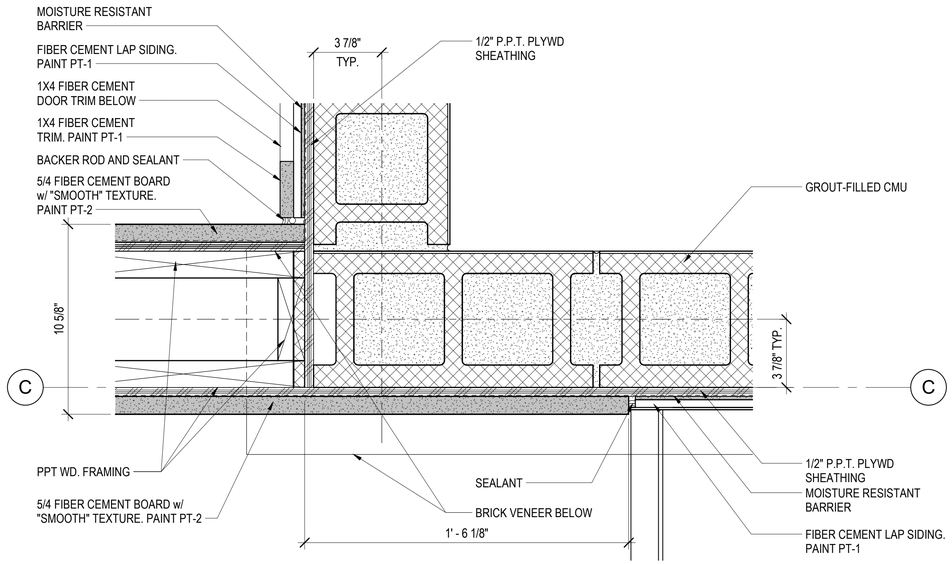

1 A5.11R LINTEL DETAIL - PLAN
3" = 1'-0"

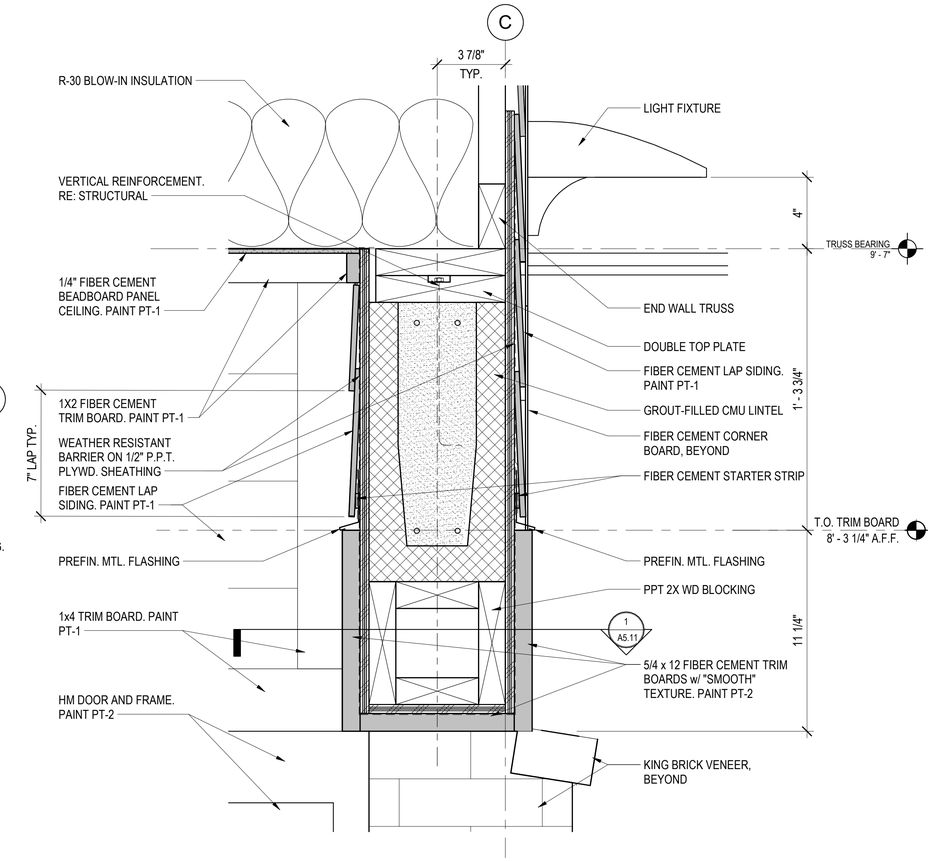

2 A5.11R BLOCK LINTEL @ ENTRY - SECTION
3" = 1'-0"

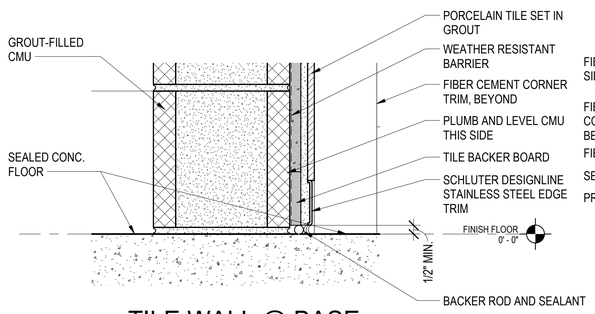

3 A5.11R TILE WALL @ BASE
3" = 1'-0"

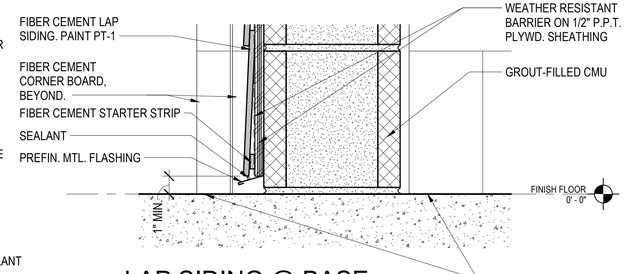

4 A5.11R LAP SIDING @ BASE
3" = 1'-0"

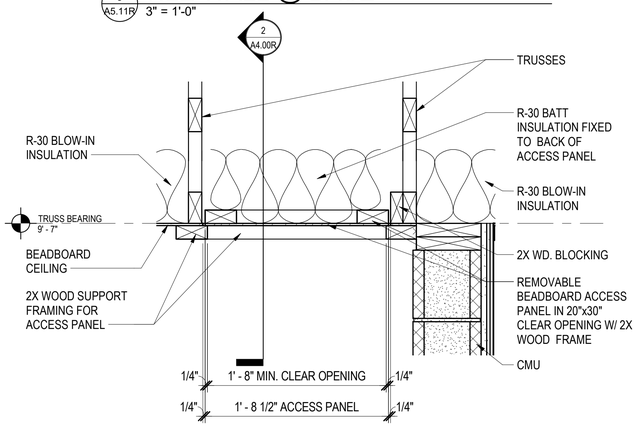

5 A5.11R ATTIC ACCESS PANEL
1 1/2" = 1'-0"

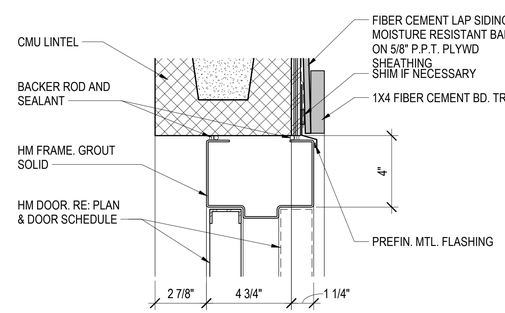

6 A5.11R DOOR HEAD - TYP.
3" = 1'-0"

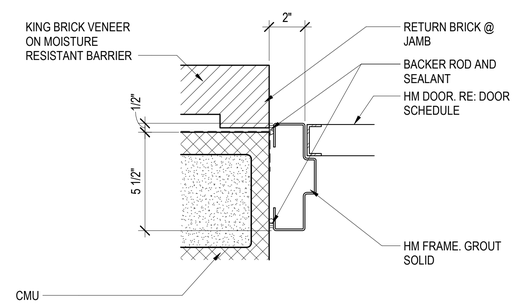

7 A5.11R DOOR JAMB @ CHASE
3" = 1'-0"

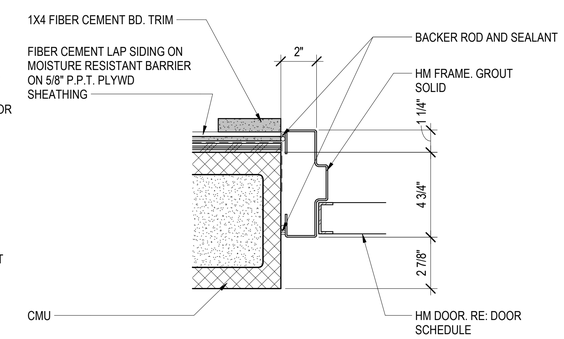

8 A5.11R DOOR JAMB @ ENTRY
3" = 1'-0"

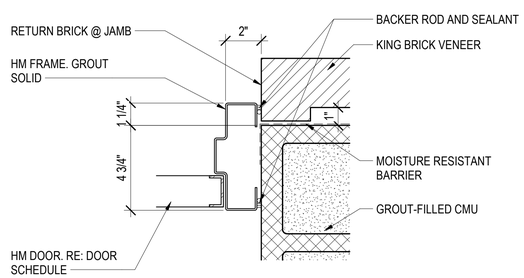

9 A5.11R DOOR JAMB @ ENTRY
3" = 1'-0"

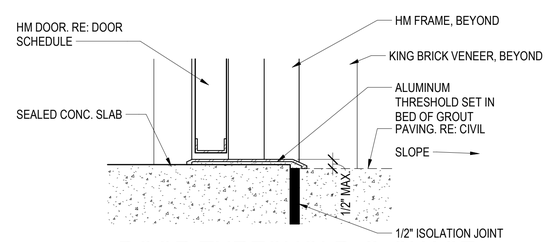

10 A5.11R DOOR THRESHOLD @ CHASE
3" = 1'-0"

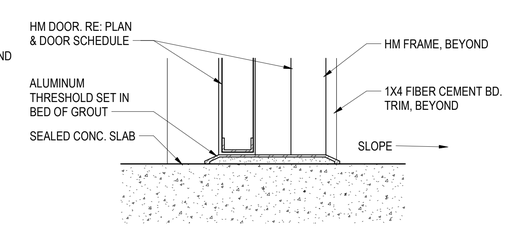

11 A5.11R DOOR THRESHOLD @ ENTRY
3" = 1'-0"

BID SET

PDG
PLANNING DESIGN GROUP
LANDSCAPE ARCHITECTURE ■ RECREATIONAL DESIGN ■ LAND PLANNING
5314 S. YALE AVE., SUITE 710, TULSA, OK 74135
918.628.1255 918.628.1256 FAX
WWW.PLANNINGDESIGNGROUP.COM

gsb inc
3555 NW 58TH Street
Suite 700-W
Oklahoma City, OK 73112
T: 405.848.9549
F: 405.848.9783
www.gsb-inc.com
Copyright ©2022 GSB, Inc

STATE OF OKLAHOMA 11537 LICENSED ARCHITECT 06-03-22

Certificate of Authority No. CA-02114
Expires: June 30,2023

PROJECT INFORMATION

PROJECT ADDRESS:
1001 E. ROBINSON ST., NORMAN, OKLAHOMA 73071

PROJECT NO.	171511A
DATE	06/03/22
DRAWN BY	CHECKED BY

GRIFFIN SOCCER COMPLEX
PHASE 6
NORMAN, OKLAHOMA

ISSUE/ REVISIONS

NO.	DATE	DESCRIPTION

OWNER:
THE CITY OF NORMAN PARKS & RECREATION
201-C WEST GRAY
NORMAN, OK 73069
(405) 366-5472

DETAILS

A5.11R

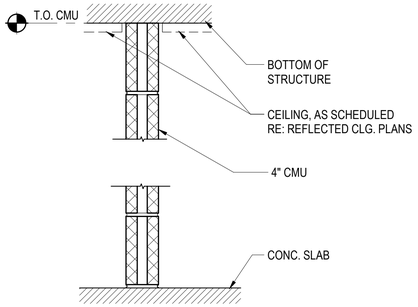

C4	INTERIOR PARTITION	
	NON-RATED	
	NON-LOAD BEARING	

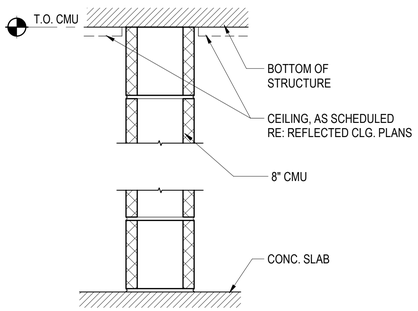

C8	INTERIOR PARTITION	
	NON-RATED	
	NON-LOAD BEARING	

MATERIAL ABBREVIATIONS
FC - FIBER CEMENT
HM - HOLLOW METAL
MR - MIRROR
PT - PAINT
TL - TILE
SC - SEALED CONCRETE

ROOM FINISH SCHEDULE

RM NO	ROOM NAME	FLOOR	BASE	NORTH WALL	EAST WALL	SOUTH WALL	WEST WALL	CEILING TYPE	CEILING HT.	COMMENTS
100	CONCESSIONS	SC	---	PT-3	PT-3	PT-3	PT-3	FC / PT-4	9' - 6 3/4"	
101	FAMILY RESTROOM	SC	---	PT-3	PT-3	PT-3	PT-3	FC / PT-4	9' - 6 3/4"	
102	MENS RESTROOM	SC	---	PT-3	PT-3	PT-3	PT-3	FC / PT-4	9' - 6 3/4"	
103	WOMENS RESTROOM	SC	---	PT-3	PT-3	PT-3	PT-3	FC / PT-4	9' - 6 3/4"	
104	CHASE	SC	---	PT-3	PT-3	PT-3	PT-3	FC / PT-4	9' - 6 3/4"	

DOOR SCHEDULE

		DOORS							DOOR FRAME						DOORS			
DOOR NO.	DOOR ROOM NAME	W	H	THK	MATERIAL	FINISH	TYPE	GLASS	MATERIAL	FINISH	TYPE	HEAD DETAIL	JAMB DETAIL	JAMB DETAIL	SILL DETAIL	FIRE RATING	HDWR SET	REMARKS
FINISH FLOOR																		
100	CONCESSIONS	3' - 0"	7' - 2"	0' - 1 3/4"	HM	PT-2	1	---	HM	PT-2	A	1/A6.00	4/A6.00	---	7/A6.00	-	SEE A7.01	
101	FAMILY RESTROOM	3' - 0"	7' - 0"	0' - 1 3/4"	HM	PT-2	1	---	HM	PT-2	A	2/A6.00	5/A6.00	---	7/A6.00	-	SEE A7.01	
102	MENS RESTROOM	3' - 0"	7' - 0"	0' - 1 3/4"	HM	PT-2	1	---	HM	PT-2	A	2/A6.00	5/A6.00	---	7/A6.00	-	SEE A7.01	
103	WOMENS RESTROOM	3' - 0"	7' - 0"	0' - 1 3/4"	HM	PT-2	1	---	HM	PT-2	A	2/A6.00	5/A6.00	---	7/A6.00	-	SEE A7.01	
104	CHASE	3' - 0"	7' - 0"	0' - 1 3/4"	HM	PT-2	1	---	HM	PT-2	A	3/A6.00	6/A6.00	---	8/A6.00	-	SEE A7.01	
110	COILING COUNTER DOOR	12' - 0"	4' - 5"	0' - 1 1/2"	S		2	---			---			---		-	SEE A7.01	

DOOR TYPES

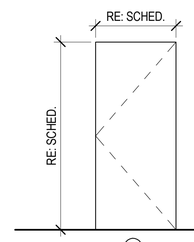

1
SINGLE FLUSH
HOLLOW METAL

FRAME TYPES

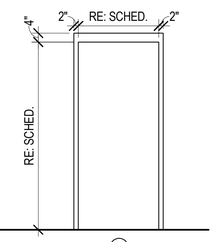

A
HOLLOW METAL
DOOR FRAME

PRODUCT / COLOR SCHEDULE

DESCRIPTION	MANUFACTURER	MODEL	COLOR
PAINT PT-1 - EXT.	SHERWIN WILLIAMS	---	DOVETAIL (SW 7018)
PAINT PT-2 - INT. AND EXT.	SHERWIN WILLIAMS	---	IRON ORE (SW 7069)
PAINT PT-3 - INT.	SHERWIN WILLIAMS	---	MINDFUL GRAY (SW 7016)
PAINT PT-4 - INT.	SHERWIN WILLIAMS	---	SHOJI WHITE (SW 7042)
BRICK VENEER	ACME BRICK	KING SIZE BRICK	DOVE GRAY (PEP030)
FIBER CEMENT LAP SIDING	JAMES HARDIE	CEDARMILL	PT-1
PORCELAIN WALL TILE - 4"x16"	ANATOLIA TILE	SOHO	WHITE GLOSSY (50-614)
ASPHALT SHINGLES	GAF	TIMBERLINE HD	WEATHERED WOOD
LOUVERED GRILLE - WALL / EXT.	GREENHECK	ESD-435	
TOILET PARTITION - PHENOLIC	BRADLEY CORPORATION	SERIES 700	GRAPHITE GRAFIX (006F)
FREQUENCY LAVATORY SYSTEM	BRADLEY CORPORATION	FL-1L	SILVER MIST
BABY CHANGING STATION	KOALA KARE	KB200	GREY (01)

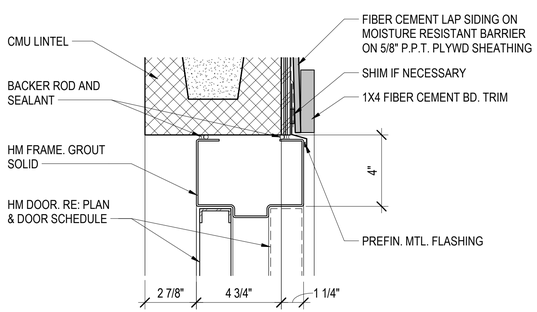

1 A6.00C DOOR HEAD @ CONCESSIONS
3" = 1'-0"

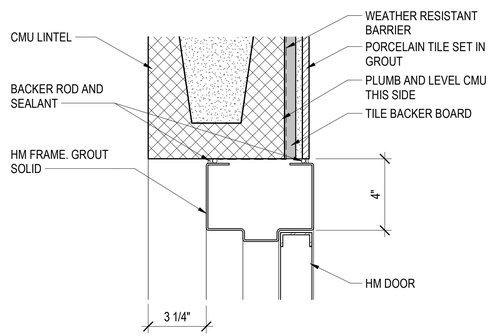

2 A6.00C DOOR HEAD @ TILE
3" = 1'-0"

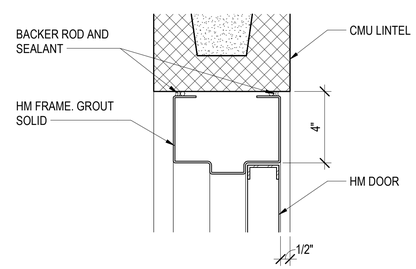

3 A6.00C DOOR HEAD @ CMU
3" = 1'-0"

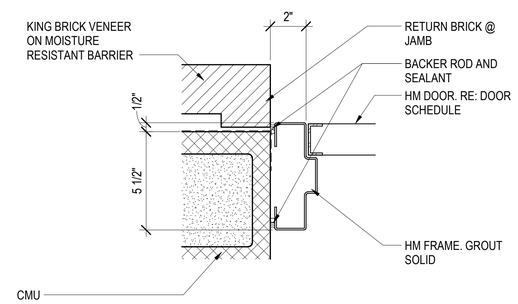

4 A6.00C DOOR JAMB @ CONCESSIONS
3" = 1'-0"

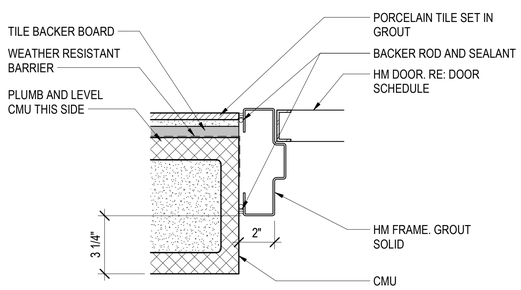

5 A6.00C DOOR JAMB @ TILE
3" = 1'-0"

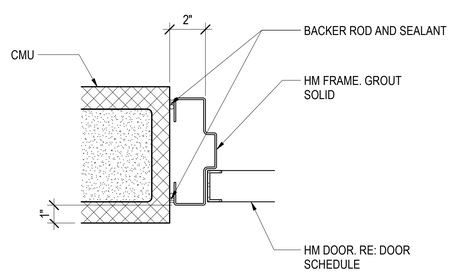

6 A6.00C DOOR JAMB @ CMU
3" = 1'-0"

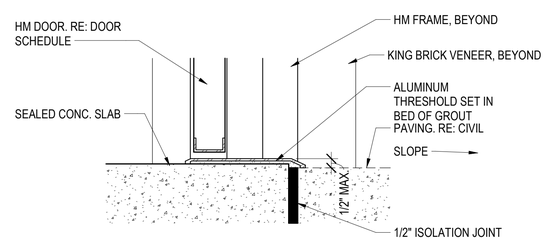

7 A6.00C DOOR THRESHOLD @ EXTERIOR
3" = 1'-0"

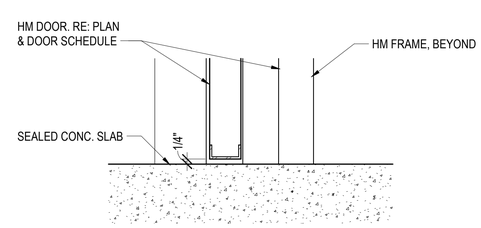

8 A6.00C DOOR THRESHOLD @ INTERIOR
3" = 1'-0"

BID SET

PDG
PLANNING DESIGN GROUP
LANDSCAPE ARCHITECTURE ■ RECREATIONAL DESIGN ■ LAND PLANNING
5314 S. YALE AVE., SUITE 710, TULSA, OK 74135
918.628.1255 918.628.1256 FAX
WWW.PLANNINGDESIGNGROUP.COM

gsb
3555 NW 58TH Street
Suite 700-W
Oklahoma City, OK 73112
T: 405.848.9549
F: 405.848.9783
www.gsb-inc.com

Copyright ©2022 GSB, Inc

STATE OF OKLAHOMA
JOHN C. GOODMAN
06-03-22
LICENSED ARCHITECT
Certificate of Authority No. CA-02114
Expires: June 30,2023

PROJECT INFORMATION
PROJECT ADDRESS:
1001 E. ROBINSON ST.,
NORMAN, OKLAHOMA 73071

PROJECT NO.	171511A
DATE	06/03/22
DRAWN BY	CHECKED BY

GRIFFIN SOCCER COMPLEX
PHASE 6
NORMAN, OKLAHOMA

ISSUE/ REVISIONS

NO.	DATE	DESCRIPTION

OWNER:
THE CITY OF NORMAN PARKS & RECREATION
201-C WEST GRAY
NORMAN, OK 73069
(405) 366-5472

SCHEDULES, DOOR ELEVATIONS & DOOR DETAILS
A6.00C

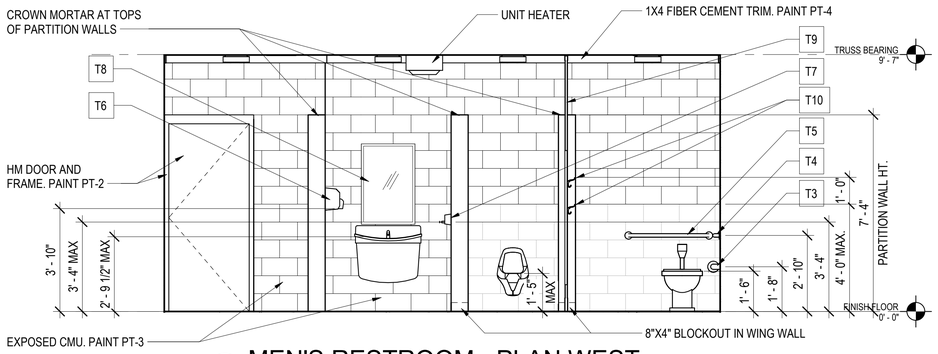

1 A6.00R MEN'S RESTROOM - PLAN WEST
3/8" = 1'-0"

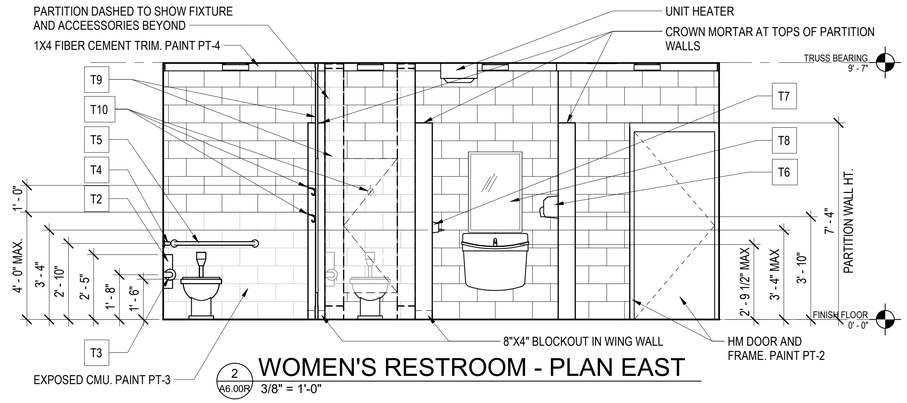

2 A6.00R WOMEN'S RESTROOM - PLAN EAST
3/8" = 1'-0"

ROOM FINISH SCHEDULE

RM NO	ROOM NAME	FLOOR	BASE	NORTH WALL	EAST WALL	SOUTH WALL	WEST WALL	CEILING TYPE	CEILING HT.	COMMENTS
100	WOMEN	SC	---	PT	PT	PT	PT	FC - PT	9'-6 3/4"	
101	MEN	SC	---	PT	PT	PT	PT	FC - PT	9'-6 3/4"	
102	CHASE	SC	---	PT	PT	PT	PT	---	---	

DOOR SCHEDULE

DOOR NO.	DOOR ROOM NAME	DOORS							DOOR FRAME						DOORS			REMARKS
		W	H	THK	MATERIAL	FINISH	TYPE	GLASS	MATERIAL	FINISH	TYPE	HEAD DETAIL	JAMB DETAIL	JAMB DETAIL	SILL DETAIL	FIRE RATING	HDWR SET	
FINISH FLOOR																		
100	WOMEN	3' - 0"	7' - 0"	0' - 1 3/4"	HM	PT	1	---	HM	PT		6/A5.11	8/A5.11	9/A5.11	11/A5.11	-	RE: ARCH SPEC	
101	MEN	3' - 0"	7' - 0"	0' - 1 3/4"	HM	PT	1	---	HM	PT		6/A5.11 OPP	8/A5.11 OPP	9/A5.11 OPP	11/A5.11 OPP	-	RE: ARCH SPEC	
102	CHASE	3' - 0"	7' - 0"	0' - 1 3/4"	HM	PT	1	---	HM	PT		6/A5.11	7/A5.11	---	10/A5.11	-	RE: ARCH SPEC	

PRODUCT / COLOR SCHEDULE

DESCRIPTION	MANUFACTURER	MODEL	COLOR
PAINT PT-1 - EXT.	SHERWIN WILLIAMS	---	DOVETAIL (SW 7018)
PAINT PT-2 - INT. AND EXT.	SHERWIN WILLIAMS	---	IRON ORE (SW 7069)
PAINT PT-3 - INT.	SHERWIN WILLIAMS	---	MINDFUL GRAY (SW 7016)
PAINT PT-4 - INT.	SHERWIN WILLIAMS	---	SHOJI WHITE (SW 7042)
BRICK VENEER	ACME BRICK	KING SIZE BRICK	DOVE GRAY (PEP030)
FIBER CEMENT LAP SIDING	JAMES HARDIE	CEDARMILL	PT-1
PORCELAIN WALL TILE - 4"x16"	ANATOLIA TILE	SOHO	WHITE GLOSSY (50-614)
ASPHALT SHINGLES	GAF	TIMBERLINE HD	WEATHERED WOOD
LOUVERED GRILLE - WALL / EXT.	GREENHECK	ESD-435	
TOILET PARTITION - PHENOLIC	BRADLEY CORPORATION	SERIES 700	GRAPHITE GRAFIX (006F)
FREQUENCY LAVATORY SYSTEM	BRADLEY CORPORATION	FL-1L	SILVER MIST
BABY CHANGING STATION	KOALA KARE	KB200	GREY (01)

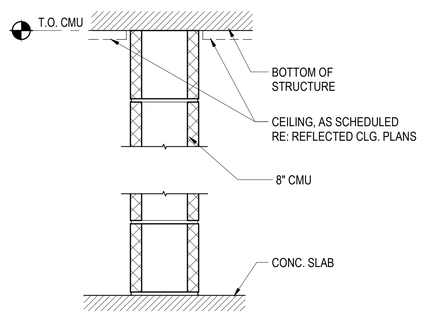

C8	INTERIOR PARTITION
	NON-RATED
	NON-LOAD BEARING

ACCESSORIES LEGEND

NO.	DESCRIPTION	MANUFACTURER	MODEL	COMMENTS
T1	BABY CHANGING STATION	KOALA KARE	KB200	
T2	SANITARY NAPKIN DISPOSAL	BRADLEY CORPORATION	4722-15	1.5 GALLONS
T3	TOILET PAPER DISPENSER	BRADLEY CORPORATION	522	DIECAST ZINC, CHROME-PLATED FINISH
T4	ACCESSIBLE GRAB BAR - 42"	BRADLEY CORPORATION	812	
T5	ACCESSIBLE GRAB BAR - 36"	BRADLEY CORPORATION	812	
T6	HAND DRYER	BRADLEY CORPORATION	2903-28	
T7	SOAP DISPENSER	BRADLEY CORPORATION	6542	
T8	MIRROR - 24"x36"	BRADLEY CORPORATION	780	ACCESSIBLE MIRROR
T9	TOILET PARTITION	BRADLEY CORPORATION	SERIES 700	PHENOLIC
T10	COAT/PURSE HOOK	BRADLEY CORPORATION	MODEL 9119	

*ALL WALL HUNG ACCESSORIES TO BE SURFACE MOUNTED ONTO CMU WALLS

DOOR TYPES

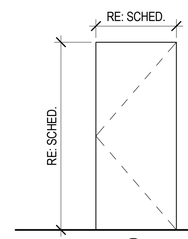

1
SINGLE FLUSH HOLLOW METAL

FRAME TYPES

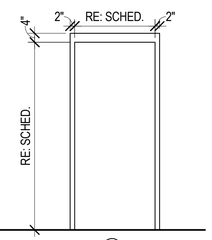

A
HOLLOW METAL DOOR FRAME

MATERIAL ABBREVIATIONS

FC - FIBER CEMENT
HM - HOLLOW METAL
MR - MIRROR
PT - PAINT
TL - TILE
SC - SEALED CONCRETE

PARTITION TYPE LEGEND

BASIC MATERIAL:
C CONCRETE
M MASONRY (CMU)
S STUD

BASIC SIZE:
0 7/8" FURRING CHANNEL
1 1 5/8" STUD
2 2 1/2" STUD
3 3 5/8" STUD
4 4" CONCRETE, MASONRY OR STUD
6 6" CONCRETE, MASONRY OR STUD
8 8" CONCRETE, MASONRY OR STUD

APPLIED LAYERS:
A 1 LAYER 5/8" GYPSUM BOARD
B 2 LAYERS 5/8" GYPSUM BOARD
C 1 LAYERS 1/2" GYPSUM BOARD
D 2 LAYERS 1/2" GYPSUM BOARD
E RESERVED
F 1 LAYER 5/8" CEMENTITIOUS BACKER BOARD
G 1 LAYER 1/2" CEMENTITIOUS BACKER BOARD
H 1 LAYER 5/8" MOISTURE RESISTANT GYPSUM BOARD
J 1 LAYER 1/2" MOISTURE RESISTANT GYPSUM BOARD
K SHAFTWALL CONSTRUCTION

PARTITION TYPE SYMBOL

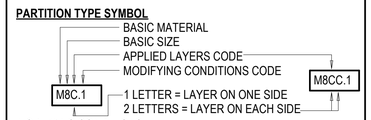

MODIFYING CONDITIONS:

1. 4" SOUND ATTENUATION BLANKETS IN STUD CAVITIES.

PDG
PLANNING DESIGN GROUP
LANDSCAPE ARCHITECTURE ■ RECREATIONAL DESIGN ■ LAND PLANNING
5314 S. YALE AVE., SUITE 710, TULSA, OK 74135
918.628.1255 918.628.1256 FAX
WWW.PLANNINGDESIGNGROUP.COM

gsb inc
3555 NW 58TH Street
Suite 700-W
Oklahoma City, OK 73112
T: 405.848.9549
F: 405.848.9783
www.gsb-inc.com

Copyright ©2022 GSB, Inc

STATE OF OKLAHOMA 115 LICENSED ARCHITECT 06-03-22

Certificate of Authority No. CA-02114
Expires: June 30,2023

PROJECT INFORMATION

PROJECT ADDRESS:

1001 E. ROBINSON ST.,
NORMAN, OKLAHOMA 73071

PROJECT NO.	171511A
DATE	06/03/22
DRAWN BY	CHECKED BY

GRIFFIN SOCCER COMPLEX PHASE 6 NORMAN, OKLAHOMA

ISSUE/ REVISIONS

NO.	DATE	DESCRIPTION

OWNER:
THE CITY OF NORMAN PARKS & RECREATION
201-C WEST GRAY
NORMAN, OK 73069
(405) 366-5472

BID SET

INTERIOR ELEVATIONS, SCHEDULES, DOOR & PARTITION TYPES

A6.00R

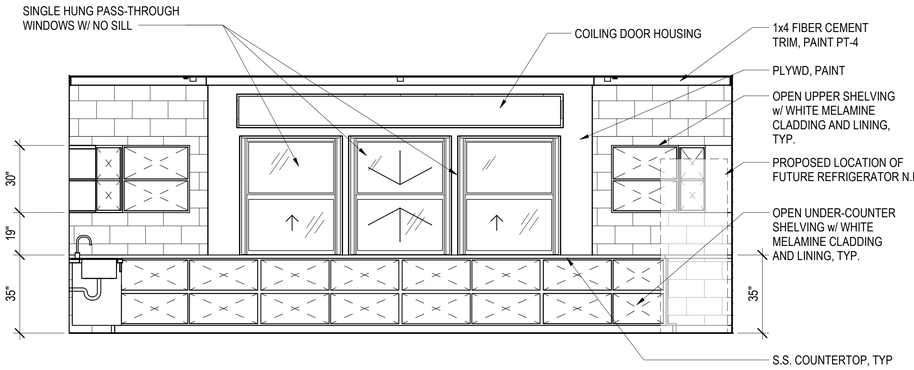

1 A6.10C CONCESSION- FRONT
3/8" = 1'-0"

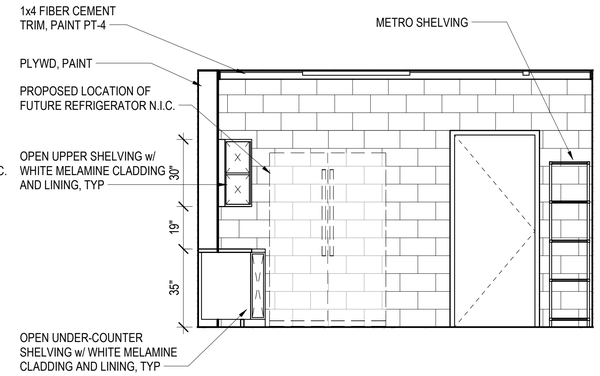

2 A6.10C CONCESSION- RIGHT
3/8" = 1'-0"

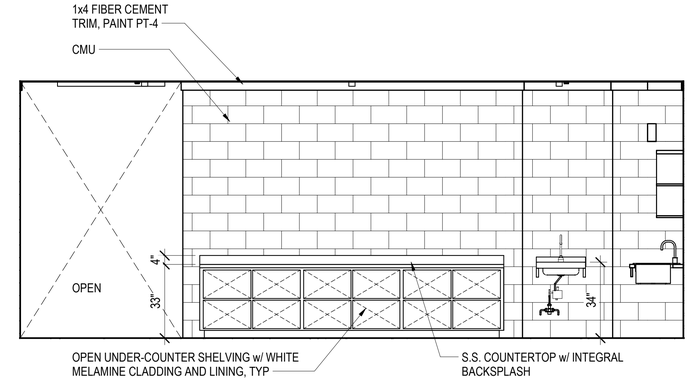

3 A6.10C CONCESSION- REAR
3/8" = 1'-0"

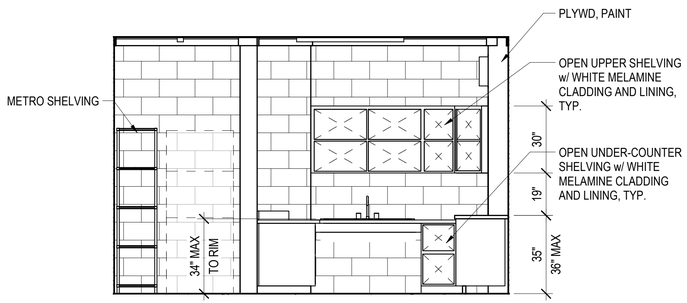

4 A6.10C CONCESSION- LEFT
3/8" = 1'-0"

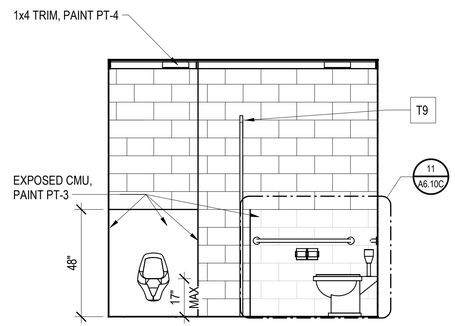

5 A6.10C MENS RESTROOM 1
3/8" = 1'-0"

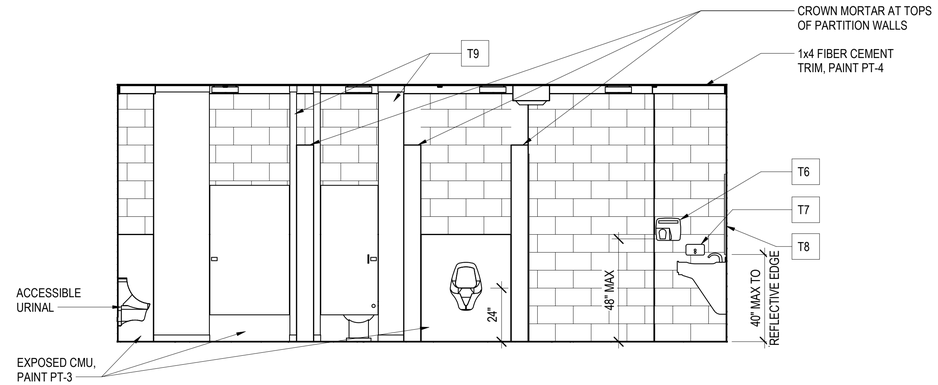

6 A6.10C MENS RESTROOM 2
3/8" = 1'-0"

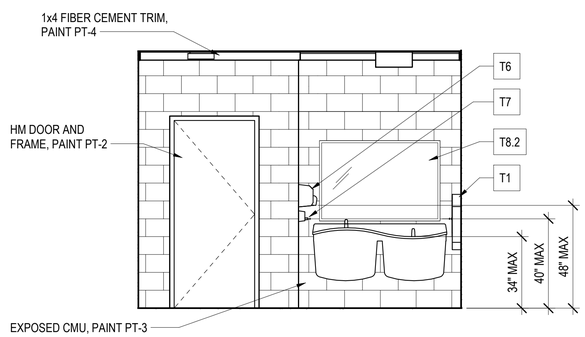

7 A6.10C MENS RESTROOM 3
3/8" = 1'-0"

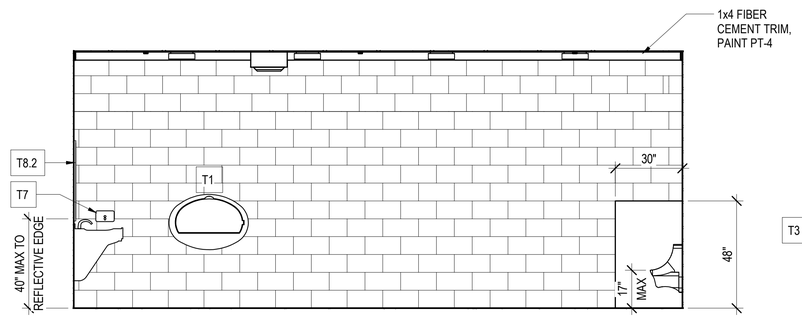

8 A6.10C MENS RESTROOM 4
3/8" = 1'-0"

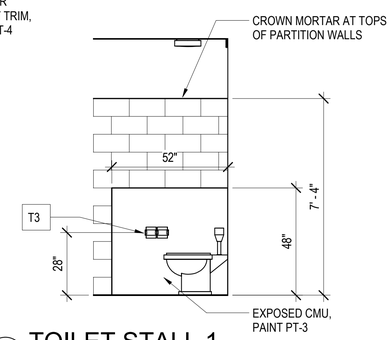

9 A6.10C TOILET STALL 1
3/8" = 1'-0"

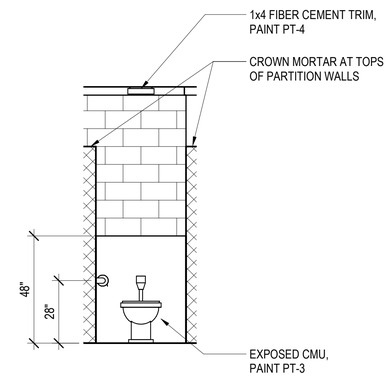

10 A6.10C TOILET STALL 2
3/8" = 1'-0"

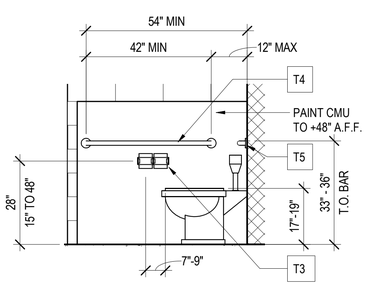

11 A6.10C H/C TOILET STALL SIDE WALL - 102
1/2" = 1'-0"

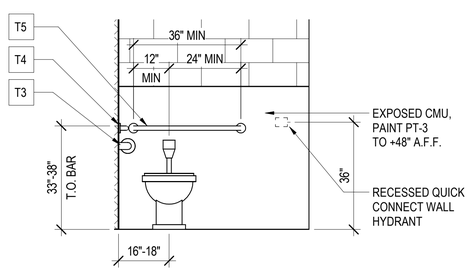

12 A6.10C H/C TOILET STALL REAR WALL - 102
1/2" = 1'-0"

ACCESSORIES LEGEND - RESTROOMS

NO.	DESCRIPTION	MANUFACTURER	MODEL	COMMENTS
T1	BABY CHANGING STATION	KOALA KARE	KB200	
T2	SANITARY NAPKIN DISPOSAL	BRADLEY CORPORATION	4722-15	1.5 GALLONS
T3	TOILET PAPER DISPENSER	BRADLEY CORPORATION	522	DIECAST ZINC, CHROME-PLATED FINISH
T4	ACCESSIBLE GRAB BAR - 42"	BRADLEY CORPORATION	812	
T5	ACCESSIBLE GRAB BAR - 36"	BRADLEY CORPORATION	812	
T6	HAND DRYER	BRADLEY CORPORATION	2903-28	
T7	SOAP DISPENSER	BRADLEY CORPORATION	6542	
T8.1	MIRROR - 24"x36"	BRADLEY CORPORATION	780	ACCESSIBLE MIRROR
T8.2	MIRROR - 54"x36"	BRADLEY CORPORATION	780	ACCESSIBLE MIRROR
T9	TOILET PARTITION	BRADLEY CORPORATION	SERIES 700	PHENOLIC
T10	COAT/PURSE HOOK	BRADLEY CORPORATION	MODEL 9119	

*ALL WALL HUNG ACCESSORIES TO BE SURFACE MOUNTED ONTO CMU WALLS

BID SET

PDG
PLANNING DESIGN GROUP
LANDSCAPE ARCHITECTURE ■ RECREATIONAL DESIGN ■ LAND PLANNING
5314 S. YALE AVE., SUITE 710, TULSA, OK 74135
918.628.1255 918.628.1256 FAX
WWW.PLANNINGDESIGNGROUP.COM

gsb
3555 NW 58TH Street
Suite 700-W
Oklahoma City, OK 73112
T: 405.848.9549
F: 405.848.9783
www.gsb-inc.com

Copyright ©2022 GSB, Inc

STATE OF OKLAHOMA 1157 REGISTERED ARCHITECT 06-03-22
Certificate of Authority No. CA-02114
Expires: June 30,2023

PROJECT INFORMATION

PROJECT ADDRESS:
1001 E. ROBINSON ST.,
NORMAN, OKLAHOMA 73071

PROJECT NO.	171511A
DATE	06/03/22
DRAWN BY	CHECKED BY

GRIFFIN SOCCER COMPLEX
PHASE 6
NORMAN, OKLAHOMA

ISSUE/ REVISIONS

NO.	DATE	DESCRIPTION

OWNER:
THE CITY OF NORMAN PARKS & RECREATION
201-C WEST GRAY
NORMAN, OK 73069
(405) 366-5472

INTERIOR ELEVATIONS

A6.10C

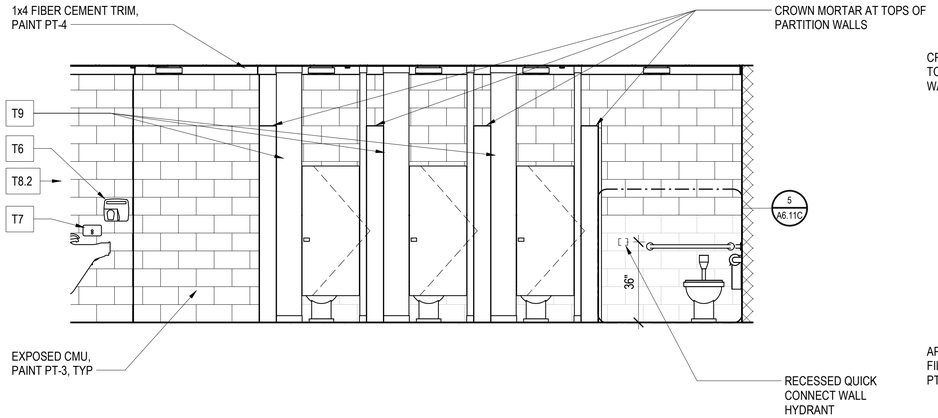

1 A6.11C INTERIOR ELEVATION- WOMENS TOILET ROOM
3/8" = 1'-0"

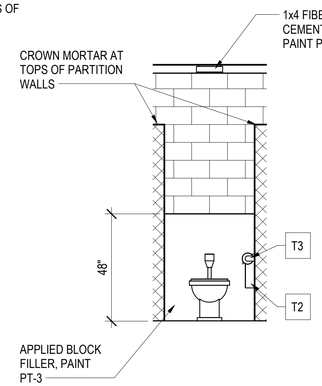

2 A6.11C TOILET STALL REAR WALL
3/8" = 1'-0"

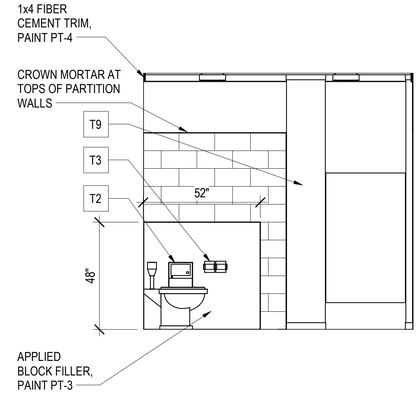

3 A6.11C TOILET STALL SIDE WALL
3/8" = 1'-0"

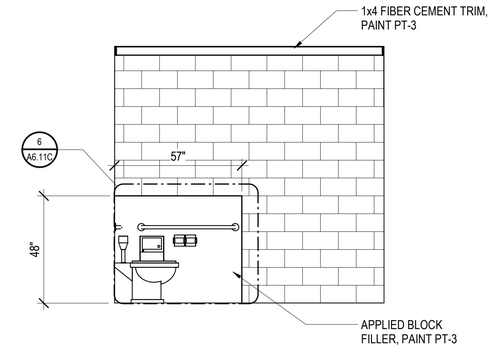

4 A6.11C H/C TOILET ROOM SIDE WALL
3/8" = 1'-0"

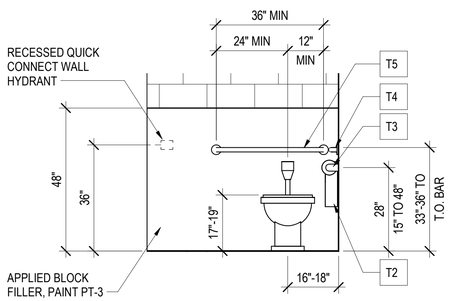

5 A6.11C H/C TOILET STALL REAR WALL - 103
1/2" = 1'-0"

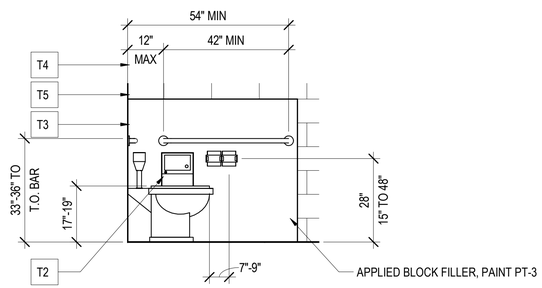

6 A6.11C H/C TOILET STALL SIDE WALL - 103
1/2" = 1'-0"

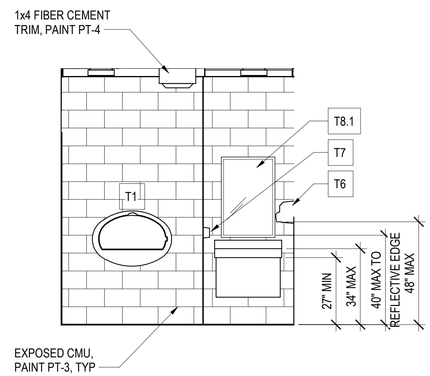

7 A6.11C FAMILY RESTROOM 1
3/8" = 1'-0"

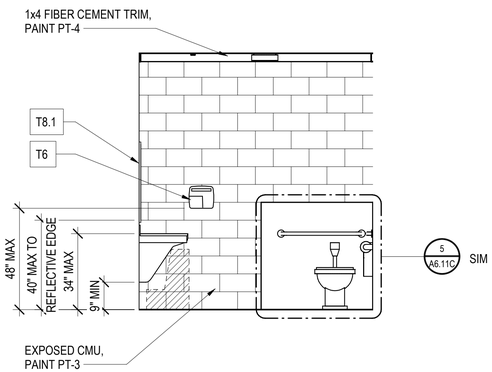

8 A6.11C FAMILY RESTROOM 2
3/8" = 1'-0"

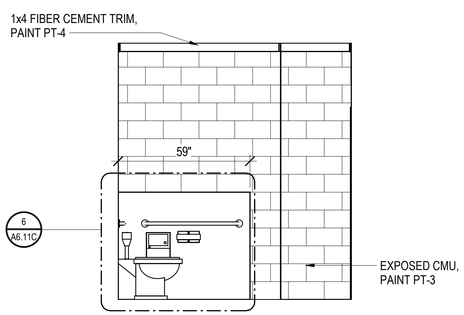

9 A6.11C FAMILY RESTROOM 3
3/8" = 1'-0"

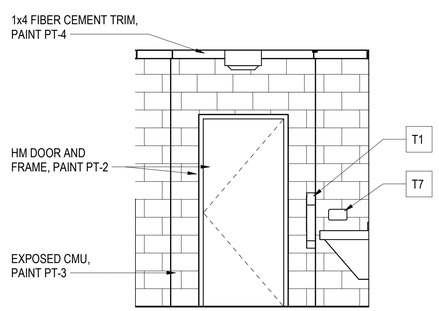

10 A6.11C FAMILY RESTROOM 4
3/8" = 1'-0"

ACCESSORIES LEGEND - RESTROOMS				
NO.	DESCRIPTION	MANUFACTURER	MODEL	COMMENTS
T1	BABY CHANGING STATION	KOALA KARE	KB200	
T2	SANITARY NAPKIN DISPOSAL	BRADLEY CORPORATION	4722-15	1.5 GALLONS
T3	TOILET PAPER DISPENSER	BRADLEY CORPORATION	522	DIECAST ZINC, CHROME-PLATED FINISH
T4	ACCESSIBLE GRAB BAR - 42"	BRADLEY CORPORATION	812	
T5	ACCESSIBLE GRAB BAR - 36"	BRADLEY CORPORATION	812	
T6	HAND DRYER	BRADLEY CORPORATION	2903-28	
T7	SOAP DISPENSER	BRADLEY CORPORATION	6542	
T8.1	MIRROR - 24"x36"	BRADLEY CORPORATION	780	ACCESSIBLE MIRROR
T8.2	MIRROR - 54"x36"	BRADLEY CORPORATION	780	ACCESSIBLE MIRROR
T9	TOILET PARTITION	BRADLEY CORPORATION	SERIES 700	PHENOLIC
T10	COAT/PURSE HOOK	BRADLEY CORPORATION	MODEL 9119	

*ALL WALL HUNG ACCESSORIES TO BE SURFACE MOUNTED ONTO CMU WALLS

BID SET

PDG
PLANNING DESIGN GROUP
LANDSCAPE ARCHITECTURE ■ RECREATIONAL DESIGN ■ LAND PLANNING
5314 S. YALE AVE., SUITE 710, TULSA, OK 74135
918.628.1255 918.628.1256 FAX
WWW.PLANNINGDESIGNGROUP.COM

gsb architects planners
3555 NW 58TH Street
Suite 700-W
Oklahoma City, OK 73112
T: 405.848.9549
F: 405.848.9783
www.gsb-inc.com
Copyright ©2022 GSB, Inc

STATE OF OKLAHOMA 113 REGISTERED ARCHITECT 06-03-22

Certificate of Authority No. CA-02114
Expires: June 30,2023

PROJECT INFORMATION

PROJECT ADDRESS:
1001 E. ROBINSON ST.,
NORMAN, OKLAHOMA 73071

PROJECT NO.	171511A
DATE	06/03/22
DRAWN BY	CHECKED BY

GRIFFIN SOCCER COMPLEX
PHASE 6
NORMAN, OKLAHOMA

ISSUE/ REVISIONS

NO.	DATE	DESCRIPTION

OWNER:
THE CITY OF NORMAN PARKS & RECREATION
201-C WEST GRAY
NORMAN, OK 73069
(405) 366-5472

INTERIOR ELEVATIONS

A6.11C

SECTION 01730 - GENERAL WORK EXECUTION REQUIREMENTS

A. Field Measurements: Take field measurements as required to fit the Work properly. Recheck measurements before installing each product. Where portions of the Work are indicated to fit to other construction, verify dimensions of other construction by field measurements before fabrication. Coordinate fabrication schedule with construction progress to avoid delaying the Work.
B. Space Requirements: Verify space requirements and dimensions of items shown diagrammatically on Drawings.
C. Locate the Work and components of the Work accurately, in correct alignment and elevation, as indicated. Make vertical work plumb and make horizontal work level. Where space is limited, install components to maximize space available for maintenance and ease of removal for replacement.
D. Comply with manufacturer's written instructions and recommendations for installing products in applications indicated.
E. Install products at the time and under conditions that will ensure the best possible results. Maintain conditions required for product performance until Project Completion. Conduct construction operations so no part of the Work is subjected to damaging operations or loading in excess of that expected during normal conditions of occupancy.
F. Attachment: Provide blocking and attachment plates and anchors and fasteners of adequate size and number to securely anchor each component in place, accurately located and aligned with other portions of the Work. Where size and type of attachments are not indicated, verify size and type required for load conditions.
G. Joints: Make joints of uniform width. Where joint locations in exposed work are not indicated, arrange joints for the best visual effect. Fit exposed connections together to form hairline joints.
H. Non-hazardous Materials: Use products, cleaners, and installation materials that are not considered hazardous.
I. Progress Cleaning: Clean areas where work is in progress to the level of cleanliness necessary for proper execution of the Work. Where dust would impair proper execution of the Work, broom-clean or vacuum the entire work area, as appropriate. Dispose of materials lawfully.
J. Start equipment and operating components to confirm proper operation. Remove malfunctioning units, replace with new units, and retest. Adjust equipment for proper operation. Adjust operating components for proper operation without binding. Test each piece of equipment to verify proper operation. Test and adjust controls and safeties. Replace damaged and malfunctioning controls and equipment.
K. Provide final protection and maintain conditions that ensure installed Work is without damage or deterioration at time of Project Completion. Comply with manufacturer's written instructions for temperature and relative humidity.

SECTION 01330 - SUBMITTAL PROCEDURES

A. Coordination: Coordinate preparation and processing of submittals with performance of construction activities. Submit all submittal items required for each Specification Section concurrently unless partial submittals for portions of the Work are indicated on approved submittal schedule.
B. General Submittal Procedure Requirements: Prepare and submit submittals required by individual Specification Sections. Types of submittals are indicated in individual Specification Sections.
C. Product Data, Shop Drawings, Certificates, Test Reports: Submit in form of pdf by means of electronic mail (email).
D. Samples: Submit two sets. Architect will retain one set.
E. Certificates and Certifications Submittals: Provide a statement that includes signature of entity responsible for preparing certification. Certificates and certifications shall be signed by an officer or other individual authorized to sign documents on behalf of that entity. Submit in form of pdf by means of email.
F. Product Data: Collect information into a single submittal for each element of construction and type of product or equipment. Submit in form of pdf by means of email.
G. Shop Drawings: Prepare Project-specific information, drawn accurately to scale. Submit in form of pdf by means of email.
H. Contractor's Review of Submittals: Review each submittal and check for coordination with other Work of the Contract and for compliance with the Contract Documents. Note corrections and field dimensions. Mark with approval stamp before submitting to Architect.
I. Architect's Review of Submittals: Architect will review each submittal required by the Specifications, make marks to indicate corrections or revisions required, and return it. Architect will stamp each submittal with an action stamp and will mark stamp appropriately to indicate action.
J. Partial submittals prepared for a portion of the Work will be reviewed when use of partial submittals has received prior approval from Architect.
K. Incomplete submittals are unacceptable, will be considered nonresponsive, and will be returned for resubmittal without review.

SECTION 02300 - EARTHWORK

A. Provide excavation, earth filling and backfilling to allow foundation, slab-on grade, and utility work of Project. Refer to requirements in Foundation Article within Structural Notes.
B. Satisfactory Soil: ASTM D2487 Soil Classification Groups GW, GP, GM, SW, SP, and SM; free of rock or gravel larger than 2 inches in any dimension, debris, waste, frozen materials, vegetation, or other deleterious matter.
C. Unsatisfactory Soil: ASTM D2487 Soil Classification Groups GC, SC, ML, MH, CL, CH, OL, OH, and PT.
D. Backfill and Fill: Satisfactory soil materials.
E. Utility Trenches: Excavate trenches to indicated slopes, lines, depths, and invert elevations. Maintain 12 inches of working clearance on each side of pipe or conduit. Place, compact, and shape bedding course to provide continuous support for pipes and conduits over rock and other unyielding bearing surfaces and to fill unauthorized excavations. Place and compact initial backfill of satisfactory soil material or subbase material, free of particles larger than 1 inch, to a height of 12 inches over the utility pipe or conduit. Place and compact final backfill of satisfactory soil material to final subgrade.
F. Aggregate Base Course: Narrowly graded mixture of crushed stone, or crushed or uncrushed gravel; ASTM D448; coarse-aggregate grading Size 57; with 100 percent passing a 1-1/2-inch sieve and 0 to 5 percent passing a No. 8 sieve.
G. Protect subgrades and foundation soils from softening and damage by water, freezing temperatures, or frost.
H. Excavate to subgrade elevations. Trim subgrades to required lines and grades.
I. When subgrade or existing ground surface to receive fill has a density less than that required for fill, break up ground surface, pulverize, moisture-condition or aerate soil, and recompact.
J. Place backfill and fill in layers not more than 8 inches in loose depth at optimum moisture content. Compact each layer under structures to 95 percent of maximum dry unit weight according to ASTM D698; elsewhere to 90 percent.
K. Grade areas to a smooth surface to cross sections, lines, and elevations indicated.
L. Under slabs-on-grade, place aggregate base course material on prepared subgrades and compact at optimum moisture content to required grades, lines, cross sections, and thicknesses.
M. Allow testing agency to inspect and test each subgrade and each fill or backfill layer and verify compliance with requirements. Verify bearing soils exhibit required bearing capacity indicated on Structural Drawings.
N. Remove surplus satisfactory soil and waste material, including unsatisfactory soil, trash, and debris, and legally dispose of it off Owner's property.

SECTION 02280 - TERMITE CONTROL

A. Provide soil treatment with termiticide.
B. Applicator Qualifications: Licensed for applying termite control chemicals.
C. Termiticide: Provide an EPA-registered termiticide complying with requirements of authorities having jurisdiction, in an aqueous solution formulated to prevent termite infestation. Provide quantity required for application at the label volume and rate for the maximum termiticide concentration allowed for each specific use, according to product's EPA-Registered Label. Provide one of the following: Termidor by Aventis Environmental Science USA LP, Premise 75 by Bayer Corporation, Dursban TC by Dow AgroSciences LLC, Talstar by FMC Corporation, Agricultural Products Group or Demon TC by Syngenta.
D. Preparation: Remove all extraneous sources of wood cellulose and other edible materials such as wood debris, tree stumps and roots, stakes, formwork, and construction waste wood from soil within and around foundations. Loosen, rake, and level soil to be treated except previously compacted areas under slabs and footings. Termiticides may be applied before placing compacted fill under slabs if recommended in writing by termiticide manufacturer.
E. Application: Mix soil treatment termiticide solution to a uniform consistency. Provide quantity required for application at the label volume and rate for the maximum specified concentration of termiticide, according to manufacturer's EPA-Registered Label, to the following so that a continuous horizontal and vertical termiticidal barrier or treated zone is established around and under building construction. Distribute treatment evenly. Treat soil materials before concrete foundations are placed.
F. Avoid disturbance of treated soil after application. Keep off treated areas until completely dry.
G. Protect termiticide solution, dispersed in treated soils and fills, from being diluted until ground-supported slabs are installed. Use waterproof barrier according to EPA-Registered Label instructions.
H. Reapply soil treatment solution to areas disturbed by subsequent excavation, grading, or other construction activities following application.

SECTION 03300 - CAST-IN-PLACE CONCRETE

A. Provide cast-in-place concrete, formwork, reinforcing, and under-slab vapor barrier, complete with related accessories.
B. Regulatory Requirements: Perform all work in strict accordance with all applicable laws and regulations, governing codes and with all other authorities having jurisdiction, which shall take precedence over the requirements of the specifications, except where requirements of the specifications are more exacting or stringent, they shall govern.
C. Coordinate with Owner's testing agency for the taking and testing of samples during the progress of the work for determination of slump, air content, compression strength in accordance with applicable governing codes.
D. Steel Reinforcement: As indicated on Structural Drawings.
E. Portland Cement: ASTM C 150, Type I.
F. Aggregates: ASTM C 33, graded, 1-1/2-inch nominal maximum aggregate size.
G. Admixtures: As allowed by notes on structural drawings.
H. Vapor Barrier: Plastic vapor barrier complying with ASTM E1745, Class A, minimum thickness of 15 mil and maximum perm rating of 0.01. Approved products include Perminator 15 by W.R. Meadows, Stego Wrap 15 by Stego Industries, and Vapor Block 15 by Raven Industries.
I. Liquid Membrane-Forming Curing Compound: ASTM C309, Type 1, Class B; certified by curing compound manufacturer to not interfere with bonding of subsequently installed flooring materials.
J. Proportion normal-weight concrete mixes to provide the properties (compressive strength, slump limit, water-cement ratio) indicated on structural drawings.
K. Formwork: Set edge form, buckheads, and intermediate screed strips for slabs to achieve required elevations and slopes for finished concrete surfaces.
L. Place vapor barrier on prepared subgrade, with joints lapped and sealed in accordance with barrier manufacturer's instructions.
M. Accurately position, support, and secure reinforcement.
N. Install construction, isolation, and control joints.
O. Place concrete in a continuous operation and consolidate using mechanical vibrating equipment.
P. Protect concrete from physical damage or reduced strength due to weather extremes during mixing, placing, and curing.
Q. Formed Surface Finish: Smooth-formed finish for concrete exposed to view or covered by direct-applied material; rough-formed finish elsewhere.
R. Unformed Slab Finishes: Troweled finish for interior floor surfaces elsewhere. Nonslip broom finish to exterior concrete slabs.
S. Begin curing unformed concrete after finishing. If curing by moist curing method, keep concrete continuously moist for at least 7 days.
T. Arrange for testing agency to perform testing and inspections of concrete work as required by building code. Owner will pay testing agency costs. Contractor will pay testing agency costs in the event of required retesting due to discovered deficiencies.
U. Protect concrete from damage. Repair surface defects in concrete.

SECTION 04200 - UNIT MASONRY

A. Provide concrete unit masonry walls and partitions, and clay face brick veneer on exterior of building walls, including mortar, ties, embedded flashing, and accessories.
B. Submit Product Data for each type of product.
C. Mockup: Build mockup to set quality standards for materials and execution. Build mock-up of brick veneer on concrete unit masonry backup, in minimum 2-foot height by 4-foot length at approved location on site, facing south. Include flashing and masonry accessories. Approval of mockup is for color, texture, and blending of masonry units; relationship of mortar to masonry unit colors; installation of flashing and accessories, tooling of joints; and aesthetic qualities of workmanship. Demolish mockup upon acceptance of completed Work.
D. Concrete Masonry Units: Refer to performance requirements on Structural Notes, nominal size indicated on Drawings, natural color.
E. Split-Faced Concrete Masonry Units (Alternate Construction): Refer to performance requirements on Structural Notes, nominal size indicated on Drawings. Color selected from manufacturer's standard options to approximate brick color indicated on Drawings.
F. Clay Face Brick: Color, texture, manufacturer indicated on Drawings. ASTM C216, Grade SW, king size. For ends of sills and caps and for similar applications that would otherwise expose unfinished brick surfaces, provide units without cores or frogs and with exposed surfaces finished. Substitute manufacturers include Boral, Endicott, Glen-Gery, and Meridian.
G. Mortar: Packaged blend of Portland cement, hydrated lime, and mortar aggregates, containing no other ingredients, complying with ASTM C 270, Type S for concrete masonry and brick below grade, and Type N for brick.
H. Adjustable Masonry-Veneer Anchors: Hot-dip galvanized wire steel double rod and double pintle ties that extend at least 1-1/2 inches into veneer and masonry backup, but with at least a 5/8-inch cover on outside face. Product and Manufacturer: #262 Anchor and #263 Tie by Heckman or approved substitute.
I. Flexible Flashing: Composite flashing product consisting of a polyester-reinforced ethylene interpolymer alloy, 0.025 inch thick, with 0.015-inch-thick coating of rubberized-asphalt adhesive. Where flashing extends to face of masonry, rubberized-asphalt coating is held back approximately 1-1/2 inches from edge. Manufacturer: Hyload or approved substitute. Color selected by Architect. Provide preformed corners, end dams, other special shapes, and seaming materials produced by flashing manufacturer.
J. Termination Bars for Flexible Flashing: Aluminum or stainless steel bars 0.075 inch by 1 inch.
K. Cellular Plastic Weep: One-piece, flexible extrusion made from UV-resistant polypropylene copolymer, full height and width of head joint and depth 1/8 inch less than depth of outer wythe, in color selected by Architect.
L. Cavity Drainage Material: Strips of free-draining polymer-strand mesh, full depth of cavity and 10 inches high, with dovetail-shaped notches 7 inches deep that prevent clogging with mortar droppings.
M. Installation of Concrete Masonry: Refer to Structural Notes.
N. Installation of Brick: Use full-size units without cutting if possible. If cutting is required to provide a continuous pattern or to fit adjoining construction, cut units with motor-driven saws; provide clean, sharp, unchipped edges and install with cut edges concealed.
O. Lay out walls in advance for accurate spacing of surface bond patterns with uniform joint thicknesses and for accurate location of openings, movement-type joints, returns, and offsets. Avoid using less-than-half-size units, particularly at corners, jambs, and, where possible, at other locations. Lay in running bond.
P. Lay brick and concrete masonry with completely filled bed and head joints; butter ends with sufficient mortar to fill head joints and shove into place. Do not deeply furrow bed joints or slush head joints.
Q. Tool exposed joints slightly concave when thumbprint hard, using a jointer larger than joint thickness unless otherwise indicated.
R. Anchor masonry veneers to wall framing not more than 16 inches o.c. vertically and horizontally, not exceeding 8 inches from and around perimeter.
S. Provide not less than 1 inch of airspace between back of masonry veneer and face of concrete masonry. Keep airspace clean of mortar droppings and other materials during construction. Bevel beds away from airspace, to minimize mortar protrusions into airspace. Do not attempt to trowel or remove mortar fins protruding into airspace.
T. Expansion (Control) Joints: Install expansion joints where indicated on Drawings as masonry progresses. Form open joint full depth of brick wythe and of width indicated, 3/8 inch wide, for installation of sealant and backer rod.
U. Install embedded flashing and weep holes in masonry at base of masonry veneer installations.
V. Flashings and Accessories: Extend flashing through veneer, across airspace behind veneer, and up face of sheathing at least 8 inches. Fasten upper edge of flexible flashing to sheathing through termination bar. Cut flexible flashing off flush with face of wall after masonry wall construction is completed. Install weep holes in veneers in head joints of first course of masonry immediately above embedded flashing. Use cellular plastic weeps to form weep holes. Space weep holes minimum 24 inches o.c. At flashings, place cavity drainage material in airspace behind veneers to in accordance with manufacturer's instructions.
W. Pointing: During the tooling of joints, enlarge voids and holes, except weep holes, and completely fill with mortar. Point up joints, including corners, openings, and adjacent construction, to provide a neat, uniform appearance. Prepare joints for sealant application at expansion joints.
X. Cleaning: Clean unit masonry as work progresses by dry brushing to remove mortar fins and smears before tooling joints. After mortar is thoroughly set and cured, clean brick by bucket-and-brush hand-cleaning method described in BIA Technical Notes 20.
Y. If utilized split-faced units, apply water repellent to exterior masonry surfaces of completed assembly.

SECTION 05500 - METAL FABRICATIONS

A. Provide steel columns, beams, and jamb supports for rolling shutters.
B. Submit Shop Drawings detailing fabrications indicated.
C. Steel Shapes: ASTM A36.
D. Fabricate metal fabrications to design, dimensions, and details indicated on Drawings. Cut metals cleanly and accurately. Remove burrs and ease edges. Provide welded baseplates to columns and jamb supports as indicated on Drawings.
E. Hot-dip galvanize metal fabrications. Apply zinc-coating by the hot-dip process in compliance with ASTM A123.
F. Install steel columns in place to inclinations indicated. Install beams and jamb supports in place plumb and level.

SECTION 06100 - ROUGH CARPENTRY

A. Provide framing with dimension lumber, wood blocking and nailers.
B. Lumber Fabrication: DOC PS 20 and applicable rules of grading agency certified by the ALSC Board of Review; dress lumber S4S; 19 percent maximum moisture content.
C. Provide preservative treatment by pressure process complying with AWPA U1; Use Category UC2 for interior wood sill plates against concrete and elsewhere where pressure preservative treated (PPT) wood is noted. Provide Use Category UC3b for exterior construction not in contact with ground where pressure preservative treatment is noted. Do not use inorganic boron (SBX) for sill plates. Kiln-dry lumber after treatment to a maximum moisture content of 19 percent.
D. Wood Framing: Refer to Structural Drawings.
E. Blocking and Nailers: Provide Standard, Stud, or No. 3 lumber or better.
F. Fasteners: Provide nails complying with ASTM F1667. Where rough carpentry is exposed to weather, utilizes pressure-preservative treated lumber, or is within exterior envelope construction, provide fasteners with hot-dip zinc coating complying with ASTM A153 or Type 304 stainless steel.
G. Set rough carpentry to required levels and lines, with members plumb, true to line, cut, and fitted. Fit rough carpentry accurately to other construction. Locate nailers, blocking, and similar supports to comply with requirements for attaching other construction.
H. Provide blocking and framing as indicated and as required to support facing materials, fixtures, specialty items, and trim.
I. Sort and select lumber so that natural characteristics do not interfere with installation or with fastening other materials to lumber. Do not use materials with defects that interfere with function of member or pieces that are too small to use with minimum number of joints or optimum joint arrangement.
J. When using preservative-treated lumber, apply field treatment to cut surfaces.

SECTION 06160 - SHEATHING

A. Section includes wall sheathing with integral water-resistive barrier and air-barrier, roof sheathing with integral roof underlayment.
B. Submittals: Submit Product Data for sheathing panels and associated tapes.
C. Wall Sheathing Product and Manufacturer: Zip System Sheathing as manufactured by Huber Engineered Woods, Charlotte, NC, or approved substitute. Wall sheathing panels shall have APA span rating of 24/16 and APA Grade of Structural 1; thickness indicated on Drawings. Facer shall be manufacturer's standard medium-density, phenolic-impregnated sheet qualifying as Grade D weather-resistive barrier in accordance with ICC AC38.
D. Roof Sheathing with Integral Roof Underlayment Product and Manufacturer: Zip System Oriented-Strand-Board Roof Sheathing as manufactured by Huber Engineered Woods, Charlotte, NC. Roof sheathing panels shall have APA span rating and structural performance indicated in Structural Notes; thickness indicated on Drawings. Facer shall be manufacturer's standard medium-density, phenolic-impregnated kraft paper overlay in accordance with ICC AC266.
E. Nails: ASTM F1667; hot-dip galvanized or corrosion-protective-coated.
F. Sheathing Tape for Joints within Zip System Wall and Roof Sheathing: Zip System Tape by Huber Engineered Woods; pressure-sensitive, self-adhering, cold-applied, seam tape consisting of polyolefin film with acrylic adhesive, tested as part of sheathing system.
G. Flashing Tape for Joints between Sheathing and Penetrating Elements: Zip System Stretch Tape by Huber Engineered Woods; Flexible, pressure sensitive, self-adhering, cold-applied seam tape, tested as part of sheathing system.
H. Arrange joints so that sheathing pieces do not span between fewer than three support members. Cut panels at penetrations, edges, and other obstructions of work; fit tightly against abutting construction unless otherwise indicated. Space sheathing panels 1/8 inch apart at ends and edges. Securely attach to substrate by fastening to comply with Table 2304.9.1, Fastening Schedule, in International Building Code. Apply fasteners so heads bear tightly against face of sheathing, but do not cut into facing.
I. Coordinate sheathing installation with flashing and joint-sealant installation so these materials are installed in sequence and manner that prevent exterior moisture from passing through completed assembly.
J. Seal sheathing joints in Zip System Sheathings according to manufacturer's written instructions. Apply Zip System Tape at all panel seams, penetrations, and facer defects or cracks to form continuous weathertight surface. Apply Zip System Stretch Tape around penetrating elements.

SECTION 06171 - SHOP-FABRICATED WOOD TRUSSES

A. Provide wood roof trusses.
B. Submittals: Submit Product Data and engineered Shop Drawings sealed by Professional Engineer.
C. Fabricator Qualifications: Shop that participates in a recognized quality-assurance program, complies with quality-control procedures in Truss Plate Institute Standard TPI 1, and involves third-party inspection by an independent testing and inspecting agency acceptable to authorities having jurisdiction.
D. Structural Performance: Metal-plate-connected wood trusses shall be capable of withstanding design loads indicated on Drawings. Comply with requirements in TPI 1.
E. Truss fabricator shall prepare and submit shop drawings directed to the Project's Structural Engineer for review. Shop Drawings shall show fabrication and installation details for trusses, including location, pitch, span, camber, configuration, and spacing for each type of truss required. Indicate sizes, stress grades, and species of lumber. Indicate permanent bracing required to prevent buckling of individual truss members due to design loads. Indicate type, size, material, finish, design values, orientation, and location of metal connector plates. Shop drawings shall be sealed by a professional engineer responsible for their preparation.
F. Lumber: DOC PS 20; dressed lumber, S4S; 19 percent maximum moisture content.
G. Utilize pressure preservative treated lumber AWPA U1 throughout. Preservative chemicals shall be acceptable to authorities having jurisdiction and containing no arsenic or chromium. Treated lumber shall have been kiln-dried to 19 percent maximum after treatment.
H. Fabricate connector plates to comply with TPI 1; hot-dipped galvanized steel.
I. Nails: ASTM F1667; hot-dip galvanized steel.
J. Fabrication: Cut truss members to accurate lengths, angles, and sizes to produce close-fitting joints. Connect truss members by metal connector plates located and securely embedded simultaneously in both sides of wood members by air or hydraulic press.
K. Installation: Install wood trusses only after supporting construction is in place and is braced and secured. Install and brace trusses according to TPI recommendations and requirements of fabricator. Install trusses plumb, square, and true to line and securely fasten to supporting construction. Install and fasten permanent bracing during truss erection and before construction loads are applied. Do not alter trusses in field. Do not cut, drill, notch, or remove truss members, except rafter tails. Treat cuts in preservative treated wood with copper naphthenate formulation intended for field application.

SECTION 07190 - WATER REPELLENTS

A. Section includes penetrating water-repellent treatments for split-face concrete masonry.
B. Submit Product Data and installation instructions.
C. Applicator Qualifications: An employer of workers trained and approved by manufacturer.
D. Limitations: Proceed with application only when existing and forecasted weather and substrate conditions permit water repellents to be applied according to manufacturers' written instructions.
E. Silane, Penetrating Water Repellent: Clear, containing 20 percent or more solids of alkyltrialkoxysilanes; with alcohol, mineral spirits, water, or other proprietary solvent carrier. Product: SL100 Water Repellent by Prosoco.
F. Cleaning: Before application of water repellent, clean substrate of substances that could impair penetration or performance of product according to water-repellent manufacturer's written instructions.
G. Apply coating of water repellent on surfaces to be treated using pressure spray with a fan-type spray nozzle to the point of saturation. Apply coating in dual passes of uniform, overlapping strokes. Remove excess material; do not allow material to puddle beyond saturation. Comply with manufacturer's written instructions for application procedure.
H. Apply a second saturation coating, repeating first application. Comply with manufacturer's written instructions for limitations on drying time between coats and after rainstorm wetting of surfaces between coats.
I. Immediately clean water repellent from adjoining surfaces and surfaces soiled or damaged by water-repellent application as work progresses. Correct damage to work of other trades caused by water-repellent application.

SECTION 07250 - WEATHER BARRIER

A. Provide fluid applied, vapor permeable, water resistive air barrier at masonry cavity wall.
B. Product Data and installation instructions.
C. Product: BASF Corporation; MasterSeal AWB 660, Dow Corning Corporation; Defend Air 200, DuPont Building Innovations; Tyvek Fluid Applied WB with Tyvek Fluid Applied Flashing and Joint Compound, Sealant for Tyvek Fluid Applied System and StraightFlash; Parex USA, Inc., Parex USA WeatherSeal Spray & Roll-on or W.R. Meadows, Inc.; Air-Shield LMP.
D. Flexible Flashing: Air barrier manufacturer's recommended self-adhesive sheet flashing.
E. Installation: Install materials in accordance with manufacturer's instructions. Provide continuous air tight barrier over surfaces indicated, with sealed joints to adjacent surfaces. Install masonry anchors before installing weather barrier over masonry; seal around anchors air tight. Use flashing to seal to adjacent construction and to bridge joints.
F. At openings, install flexible flashings in accordance with manufacturer's instructions.

SECTION 07450 - FIBER-CEMENT SIDING AND TRIM

A. Provide fiber-cement siding and trim for exterior cladding and soffits.
B. Submittals: Submit Product Data.
C. Fiber-Cement Siding: ASTM C1186, Type A, Grade II, fiber-cement board, noncombustible; not less than 5/16 inch thickness; width to provide exposure dimension indicated on Drawings; wood-grain texture; factory primed. Select Cedarmill Lap Siding as manufactured by James Hardie or approved substitute.
D. Eave Soffits: HardieSoffit Vented Smooth as manufactured by James Hardie or approved substitute.
E. Trim: Fiber-cement composition as siding, HardieTrim, Cedarmill texture, as manufactured by James Hardie or approved substitute. Sizes and profiles as indicated on Drawings.
F. Fasteners: Use hot-dip galvanized siding nails of sufficient length to penetrate a minimum of 1 inch into wood substrate.
G. Installation: Comply with manufacturer's written installation instructions applicable to products, applications, and Project location. Touch-up all field cut edges before installing.
H. Treatment of Joints: Where joints are unavoidable within spans of lap siding, stagger joints between successive courses. Allow space for thermal expansion between ends of siding panels and trim. Seal joint between siding and trim with sealant recommended by siding manufacturer. Seal around all penetrations.

SECTION 07451 - FIBER CEMENT CEILING PANELS

A. Provide fiber cement panel ceiling and trim at building interior and protected exterior entryway.
B. Fiber Cement Panels: HardieSoffit Beaded Porch Panels as manufactured by James Hardie or approved substitute.
C. Fiber Cement Trim: Sizes and profiles as indicated on Drawings. HardieTrim, smooth finish, as manufactured by James Hardie or approved substitute.
D. Fasteners: Nails or screws as recommended by manufacturer for application indicated to provide secure attachment.
E. Installation: Comply with manufacturer's written installation instructions applicable to products and application. Touch-up all field cut edges before installing. Locate fasteners to for concealment by trim or in alignment with beaded reveals.

SECTION 07311 - ASPHALT COMPOSITION SHINGLE ROOFING

A. Provide asphalt composition shingle roofing, underlayment, metal drip edges, perimeter and penetration flashings.
B. Workmanship Warranty: Provide written warranty to Owner, signed by Contractor and shingle installer, agreeing to repair, replace and maintain completed roofing installation in watertight condition for 2-years following date of substantial completion of project. Warranty limited to ordinary wear and tear by elements, and to defects due to faulty materials and workmanship. Make repairs at no cost to Owner.
C. Materials Warranty: Provide to Owner manufacturer's maximum standard warranties available for material, wind resistance, and algae-resistance available for shingle selected for Project.
D. Shingle Type: As indicated on Drawings (GAF). For ridge, provide manufacturer's matching pre-cut shingles fabricated for those locations. Substitute manufacturers include Atlas, CertainTeed, Malarkey, Owens Corning, and Tamko.
E. Roofing Felt Underlayment: Unperforated asphalt saturated organic fiber felt, commonly called No. 15 asphalt felt; ASTM D226, Type I. May be omitted if allowed by shingle manufacturer due to use of weather resistive sheathing.
F. Self-Adhering Waterproof Underlayment: Product approved by roofing manufacturer for Project warranty; minimum 40-mil-thick, self-adhering, polymer-modified, bituminous sheet membrane, complying with ASTM D1970. Provide primer when recommended by underlayment manufacturer.
G. Rigid Ridge Vent: Shingle manufacturer's standard, rigid section high-density polypropylene or other UV-stabilized plastic ridge vent for use under ridge shingles containing nonwoven geotextile filter strips and external deflector baffles.
H. Nails: 11 or 12 gage barbed shank aluminum or hot dip galvanized steel with 3/8 inch head and conventional sharp points, length required to penetrate through plywood decking.
I. Plastic Cement: ASTM D4586.
J. Metal Drip Edge: 0.027 inch thick (26 gage) galvanized steel with 3 inch roof flange and down turned leg as detailed with continuous angled and hemmed drip edge.
K. Vent Pipe Flashing: Lead sleeve fabricate from minimum 1/16 inch thick sheet. Size to slip over and turn down into pipe, soldered to skirt at slope of roof, and extending minimum 4 inches from pipe onto roof.
L. Install shingles and underlayments following most stringent requirements of shingle manufacturer's specifications.
M. Installation of Underlayment at Eaves and Rakes: Coordinate installation of waterproof underlayment with installation of metal drip edges. Apply minimum 24 inch wide strip of self-adhering waterproof underlayment with lower edge flush with outside edge of metal eave drip edges. Lap ends as recommended by self-adhering waterproof underlayment manufacturer. Lap subsequently applied felt underlayment as recommended by manufacturer but not less than 2 inches.
N. Installation of Felt Underlayment: Install felt underlayment on roof deck on covered by self-adhering waterproof underlayment. Lap each course 2 inch minimum over lower course at horizontal joints; lap end joints 4 inch minimum and offset 6-feet minimum from end laps in preceding and subsequent courses. Lap felts 6 inches from both sides over hips, and ridges, and 4 inch minimum up face of vertical obstructions. Secure with sufficient anchorage devices to hold in position until shingles are applied. Felt underlayment may be omitted if allowed by shingle manufacturer due to use of roof sheathing with integral underlayment, and yet meet requirements for issuance of warranty.
O. Shingle Installation, Starter Strips: Use 9 inch minimum width strips of No. 90 mineral surface organic roll roofing or roofing shingles with tabs cut off as starter strips, with mineral surfaced side placed up or manufacturer's prefabricated starter strips, with edge overhanging roof eaves 1/2 inch maximum. Nail at spacing recommended by manufacturer for shingle nailing; place nails about 3 inches up from lower edge and located so heads are not exposed to cutouts of first course shingles. Nail securely along hips and ridges.
P. Application of Shingles: Apply shingles across and diagonally up roof. Offset courses for best appearance in field of shingle roofing. For best distribution of color blend, run each course at least 4 shingles before proceeding to next course. Maintain manufacturer recommended shingle exposure. Start with full shingle aligned even with starter strips. Offset shingles in subsequent courses across roof at points recommended in manufacturer's installation instructions.
Q. Trimming and Cutting: Cut shingles to closely and neatly fit perimeter of obstructions and all items penetrating through roofing, with shingles set into 4 inches minimum width strip of plastic cement. At roof rakes, cut shingles to overhang metal edge trims by 1/2 inch.
R. Vent Pipes: Apply shingles up to pipe. Cut hole in shingle to go over pipe; set shingle in plastic cement. Install preformed sheet lead flashing flange over pipe and onto roof and set in plastic cement. Resume shingle application after flashing is in place. Cut shingles in successive courses and embed them in plastic cement for full area overlapping flashing flanges.
S. Nailing: Nail each shingle along nailing line established by shingle manufacturer. Place nails so heads are not visible when succeeding shingles are installed. At cut shingles, locate nail 1 inch in from cut shingle end and not exceeding 8 inch to 10 inch spacing between end nail and first interior nail, with remainder of nails driven in nailing line at spacings specified for full shingles. For full shingles, use 4 nails for each shingle, located 1 inch and 12 inches in from each shingle end in nailing line. At ridge and hip shingles, nail each shingle on each side; locate nails 1/2 inch in from manufacturer recommended shingle exposure and 1 inch up from shingle edges.
T. Ridge Vents: Install continuous ridge vents over asphalt shingles according to manufacturer's written instructions. Fasten with roofing nails of sufficient length to penetrate sheathing.
U. Ridge Shingles: Maintain same exposure of cap shingles as roofing shingle exposure. Lap cap shingles at ridges to shed water away from direction of prevailing winds. Fasten with roofing nails of sufficient length to penetrate sheathing. Fasten ridge cap asphalt shingles to cover ridge vent without obstructing airflow.

BID SET

PDG
PLANNING DESIGN GROUP
LANDSCAPE ARCHITECTURE • RECREATIONAL DESIGN • LAND PLANNING
5314 S. YALE AVE., SUITE 710, TULSA, OK 74135
918.628.1255 918.628.1256 FAX
WWW.PLANNINGDESIGNGROUP.COM

gsb inc Architects Planners®
3555 NW 58TH Street
Suite 700-W
Oklahoma City, OK 73112
T: 405.848.9549
F: 405.848.9783
www.gsb-inc.com

Copyright ©2022 GSB, Inc

Certificate of Authority No. CA-02114
Expires: June 30,2023

PROJECT INFORMATION

PROJECT ADDRESS:

1001 E. ROBINSON ST.,
NORMAN, OKLAHOMA 73071

PROJECT NO.	171511A
DATE	06/03/22
DRAWN BY	CHECKED BY

GRIFFIN SOCCER COMPLEX
PHASE 6
NORMAN, OKLAHOMA

ISSUE/ REVISIONS

NO.	DATE	DESCRIPTION

OWNER:
THE CITY OF NORMAN PARKS & RECREATION
201-C WEST GRAY
NORMAN, OK 73069
(405) 366-5472

SPECIFICATIONS

A7.00

SECTION 07920 - JOINT SEALANTS

A. Provide silicone joint sealants.
B. Proceed only when temperature and moisture conditions are comply with joint-sealant manufacturer requirements. Install only when joint widths are less than those allowed by joint-sealant manufacturer for applications indicated.
C. Prior to sealant installation, remove any contaminants capable of interfering with adhesion.
D. Compatibility: Provide joint sealants, backings, and other related materials that are compatible with one another and with joint substrates under conditions of service and application, as demonstrated by joint-sealant manufacturer, based on testing and field experience.
E. Sealant Joints at Plumbing Fixtures: Silicone sealant; one-part, fungicidal; ASTM C 920, Type S, Grade NS, Class 25; nonstaining, nonsagging, nonbleeding, solvent curing and fungus resistant
F. Sealant Joints Elsewhere: Single-component, nonsag, neutral-curing silicone joint sealant; ASTM C920, Type S, Grade NS, Class 100/50, for Use NT.
G. Backings: Provide cylindrical sealant backings of material that are nonstaining; are compatible with joint substrates, sealants, primers, and other joint fillers; and are approved for applications indicated by sealant manufacturer based on field experience and laboratory testing. Backings comply with ASTM C1330, Type C (closed-cell material with a surface skin), and of size and density to control sealant depth and otherwise contribute to producing optimum sealant performance.
H. Bond-Breaker Tape: Polyethylene tape or other plastic tape recommended by sealant manufacturer for preventing sealant from adhering to rigid, inflexible joint-filler materials or joint surfaces at back of joint. Provide self-adhesive tape where applicable.
I. Primer: Material recommended by joint-sealant manufacturer where required for adhesion of sealant to joint substrates indicated, as determined from preconstruction joint-sealant-substrate tests and field tests.
J. Cleaners for Nonporous Surfaces: Chemical cleaners acceptable to manufacturers of sealants and sealant backing materials, free of oily residues or other substances capable of staining or harming joint substrates and adjacent nonporous surfaces in any way, and formulated to promote optimum adhesion of sealants to joint substrates.
K. Masking Tape: Nonstaining, nonabsorbent material compatible with joint sealants and surfaces adjacent to joints.
L. Surface Cleaning of Joints: Clean out joints immediately before installing joint sealants to comply with joint-sealant manufacturer's written instructions and the following requirements:
M. Joint Priming: Prime joint substrates where recommended by joint-sealant manufacturer. Apply primer to comply with joint-sealant manufacturer's written instructions.
N. Use of Masking Tape: Use masking tape where required to prevent contact of sealant or primer with adjoining surfaces that otherwise would be permanently stained or damaged by such contact or by cleaning methods required to remove sealant smears. Remove tape immediately after tooling without disturbing joint seal.
O. Installation: Comply with joint-sealant manufacturer's written installation instructions for products and applications indicated, unless more stringent requirements apply.
P. Sealant Installation Standard: Comply with recommendations in ASTM C 1193 for use of joint sealants as applicable to materials, applications, and conditions indicated.
Q. Install sealant backings of kind indicated to support sealants during application and at position required to produce cross-sectional shapes and depths of installed sealants relative to joint widths that allow optimum sealant movement capability.
R. Install bond-breaker tape behind sealants where sealant backings are not used between sealants and backs of joints.
S. Install sealants using proven techniques that comply with the following and at the same time backings are installed. Place sealants so they directly contact and fully wet joint substrates. Completely fill recesses in each joint configuration. Produce uniform, cross-sectional shapes and depths relative to joint widths that allow optimum sealant movement capability.
T. Tooling of Nonsag Sealants: Immediately after sealant application and before skinning or curing begins, tool sealants according to requirements to form smooth, uniform beads of configuration indicated; to eliminate air pockets; and to ensure contact and adhesion of sealant with sides of joint. Provide concave joint profile.
U. Clean off excess sealant or sealant smears adjacent to joints as the Work progresses by methods and with cleaning materials approved in writing by manufacturers of joint sealants and of products in which joints occur.

SECTION 08110 - HOLLOW METAL DOORS AND FRAMES

A. Provide hollow metal doors and frames.
B. Coordinate work with door opening construction and door hardware installation.
C. Doors: Complying with SDI A250.8 for Level 3 (16 gage), Model 1 (Full Flush).
D. Frames: Complying with SDI A250.8 for Level 3 (14 gage), fully welded construction.
E. Steel Sheet: Zinc zinc coated (ASTM A653 G60) sheet for doors and frames.
F. Reinforce doors and frames to receive surface applied hardware.
G. Factory Applied Prime Finish: Manufacturer's standard complying with SDI A250.10.
H. Frame Anchors: Manufacturer's standard to suit installation conditions and performance quality; hot-dip galvanized at exterior frames.
I. Install doors and frames in accordance with manufacturer's instructions and SDI A250.11.

SECTION 08330 - ROLLING COUNTER SHUTTERS

A. Provide electric operated rolling counter doors.
B. Design Requirements: Provide shutter to withstand design wind load of 35 psf.
C. Submittals: Submit Product Data. Submit Shop Drawings including interface with adjacent work.
D. Installer Qualifications: Firm approved by manufacturer.
E. Warranty: Provide manufacturer's warranty against defect in material and workmanship for two years from Date of Substantial Completion.
F. Basis-of-Design Product and Manufacturer: Model ESC10 Rolling Counter Shutter manufactured by CornellCookson.
G. Counter Shutter Curtain: Consists of galvanized steel, interlocked flat-faced slats, 1-1/2 inches high by 1/2 inch deep, minimum 22 gauge ASTM A653, Commercial Quality, galvanized steel with extruded tubular aluminum bottom bar with continuous lift handle and vinyl astragal.
H. Finish: Powder coat. Basis-of-Design: CornellCookson SpectraShield. Color selected by Architect from manufacturer's full range.
I. Endlocks: Fabricate interlocking slat sections with high strength molded nylon endlocks riveted to ends of alternate slats.
J. Guides: Heavy duty extruded aluminum sections with snap-on cover to conceal fasteners. Provide polypropylene pile runners on both sides of curtain to eliminate metal to metal contact between guides and curtain. Powder coat matching curtain.
K. Counterbalance Shaft Assembly: Consists of steel pipe barrel capable of supporting curtain load with maximum deflection of 0.03 inches per foot of width and oil-tempered, heat-treated steel helical torsion spring balance assembly designed for proper balance of door to ensure that maximum effort to operate will not exceed 25 lbs. Provide wheel for applying and adjusting spring torque.
L. Brackets: Fabricate from reinforced steel plate with bearings at rotating support points to support counterbalance shaft assembly and form end closures. Powder coat matching curtain.
M. Hood: Minimum 24 gauge galvanized steel with reinforced top and bottom edges. Provide minimum 1/4 inch steel intermediate support brackets. Powder matching curtain.
N. Industrial Duty Gear Head Operator (CornellCookson Model MG): The operator must not extend above or below the door coil when mounted front-of-coil. UL listed, totally enclosed non-ventilated gear head operator rated with horsepower as recommended by door manufacture for size and type of door. Provide complete with electric motor and factory pre-wired motor control terminals, maintenance free solenoid actuated brake, provisions for auxiliary push-up operation and control station.
O. Control Station: Surface mounted, "Open/Close/Stop" push buttons; NEMA 1. Constant pressure to close; no sensing device required.
P. Padlockable Slide Bolt: Padlockable slide bolt on exterior side of bottom bar at each jamb extending into slots in guides. Provide interlock switch on motor operation.
Q. Install door and operating equipment with necessary hardware, anchors, inserts, hangers and supports in accordance with manufacturer's installation instructions.
R. Following completion of installation, including related work by others, lubricate, test, and adjust doors for ease of operation, free from warp, twist, or distortion.

SECTION 08580 - TRANSACTION WINDOWS

A. Provide aluminum-framed vertical sliding windows.
B. Submittals: Submit Product Data for each type of product, including construction details, material descriptions, glazing and fabrication methods, dimensions of individual components and profiles, hardware, and finishes for aluminum transaction windows. Submit Shop Drawings, including elevations, sections, hardware, accessories, operational clearances, and details of installation, including anchor installation.
C. Basis-of-Design Product and Manufacturer: Model SW1014K Custom Vertical Sliding Service Windows manufactured by C.R. Laurence Co., Inc.
D. Transaction Windows: Units composed of fixed upper sash and vertical sliding lower sash. Custom size indicated on Drawings. Unit frame and frames fabricated from extruded aluminum members. Finished with thermally cured fluoropolymer (Kynar) paint finish; custom color.
E. Glazing: Clear tempered glass, 1/4 inch thick. Glaze windows in factory.
F. Hardware: Provide manufacturer's standard hardware fabricated from aluminum, stainless steel, carbon steel complying with AAMA 907, or other corrosion-resistant material compatible with adjacent materials; designed to smoothly operate, tightly close, and securely lock transaction windows, and sized to accommodate sash weight and dimensions. Exposed hardware finish of satin chrome or satin stainless, as standard for manufacturer for hardware component.
G. Locks and Latches: Allow unobstructed movement of lower sash across upper sash and operated from inside only. Operable sash automatically locks when unit is closed.
H. Fasteners: Noncorrosive and compatible with transaction window members, trim, hardware, anchors, and other components. Do not use exposed fasteners to the greatest extent possible. For application of hardware, use fasteners that match finish hardware being fastened.
I. Fabricate aluminum transaction windows to size indicated. Provide complete system for assembling components and anchoring transaction windows.
J. Complete fabrication, assembly, finishing, hardware application, and other work in the factory to greatest extent possible. Disassemble components only as necessary for shipment and installation.
Comply with manufacturer's written instructions for installing transaction windows, hardware, and other components. Install windows level, plumb, square, true to line, without distortion, anchored securely in place to structural support, and in proper relation to adjacent construction.
K. Separate aluminum and other corrodible surfaces from sources of corrosion or electrolytic action at points of contact with other materials.
L. Adjust operating sashes and hardware for a tight fit at contact points and smooth operation.

SECTION 08710 - DOOR HARDWARE - CONCESSIONS

A. Provide hardware for doors where not otherwise provided as manufactured door assembly.
B. Products and Manufacturers, Hardware Finishes: In accordance with Owner's standards, including Corbin Russwin ML Locksets with LWA levers, Norton 7500 Closers, Pemko CFM Continuous Hinges, HES Electric Strikes, and Securitron Position Switches and Power Supply.
C. Key locks and cylinders in accordance with Owner's instructions.
D. Install all hardware in compliance with manufacturer's instruction requirements. Attach hardware securely in final position. Do not install surface mounted hardware until finish has been installed on substrate.
E. Set hardware level, plumb and true to line and location required. Adjust and reinforce attachment substrate as necessary for proper installation and operation.
F. Cut and fit thresholds to profile of door frames, with mitered corners and hairline joints. Join units with concealed welds or concealed mechanical joints. Cut smooth openings for spindles, bolts and similar items, if any. Set thresholds in full bed of either butyl rubber sealant, to completely fill concealed voids and exclude moisture from all sources. Do not plug drainage holes or block weeps. Clean adjacent finishes to be free of excess sealant. Secure thresholds with permanent anchorage devices of proper size, fabricated from noncorrosive metal of type compatible with substrate and metal of threshold.
G. Check and adjust each operating item of hardware to operate freely and easily, to ensure proper operation and function of each unit.
H. Restroom Doors: Provide continuous hinge, storeroom lockset, electric strike, closer, threshold, kickplate, rain guard, door bottom sweep, gasket weatherstripping, position switch, and power supply for each door. To serve electric strikes, provide timer in chase area. At Family Restroom, add Thumbturn Deadbolt for privacy.
I. Maintenance Door: Provide 3 butt hinges, storeroom lockset, and three silencers.
J. Concessions Door: Provide continuous hinge, storeroom lockset, closer, threshold, kickplate, rain guard, door bottom sweep, and gasket weatherstripping.

SECTION 08710 - DOOR HARDWARE - RESTROOM

A. Provide hardware for doors where not otherwise provided as manufactured door assembly.
B. Products and Manufacturers, Hardware Finishes: In accordance with Owner's standards, including Corbin Russwin ML Locksets with LWA levers, Norton 7500 Closers, Pemko CFM Continuous Hinges, HES Electric Strikes, and Securitron Position Switches, and Power Supplies.
C. Key locks and cylinders in accordance with Owner's instructions.
D. Install all hardware in compliance with manufacturer's instruction requirements. Attach hardware securely in final position. Do not install surface mounted hardware until finish has been installed on substrate.
E. Set hardware level, plumb and true to line and location required. Adjust and reinforce attachment substrate as necessary for proper installation and operation.
F. Cut and fit thresholds to profile of door frames, with mitered corners and hairline joints. Join units with concealed welds or concealed mechanical joints. Cut smooth openings for spindles, bolts and similar items, if any. Set thresholds in full bed of either butyl rubber sealant, to completely fill concealed voids and exclude moisture from all sources. Do not plug drainage holes or block weeps. Clean adjacent finishes to be free of excess sealant. Secure thresholds with permanent anchorage devices of proper size, fabricated from noncorrosive metal of type compatible with substrate and metal of threshold.
G. Check and adjust each operating item of hardware to operate freely and easily, to ensure proper operation and function of each unit.
H. Restroom Doors: Provide continuous hinge, storeroom lockset, electric strike, closer, threshold, kickplate, rain guard, door bottom sweep, gasket weatherstripping, position switch, and power supply for each door. To serve electric strikes, provide timer in chase area.
I. Maintenance Door: Provide 3 butt hinges, storeroom lockset, threshold, rain guard, door bottom sweep, and gasket weatherstripping.

SECTION 09310 - TILING

A. Provide cementitious tile backer board and ceramic tile surfacing as indicated on Drawings.
B. Submit Product Data for each type of product. Submit samples for tile and trim.
C. Tile Models, Sizes, Colors, Patterns, and Manufacturers: As indicated on Drawings. Provide trim units coordinated with sizes and coursing of adjoining flat tile. Tile trim profiles, colors, and patterns as selected by Architect. Substitute manufacturers include Emser, DalTile, American Olean, and Interceramic.
D. Cementitious Tile Backer Board: Panels complying with ANSI A118.9 and ASTM C1288 or ASTM C1325, thickness indicated on Drawings.
E. Setting Mortar (Thinset): ANSI A118.4. Provide prepackaged, dry-mortar mix containing dry, redispersible, vinyl acetate or acrylic additive to which only water is added.
F. Grout: ANSI A118.7; polymer modified type. Use sanded grout unless unsanded is recommended by fabricator of tile installed. Colors as selected by Architect.
G. Waterproof Membrane: Fluid-applied latex rubber or elastomeric polymer formulation. Approved Product: RedGard Waterproofing Membrane by Custom Building Products or approved substitute.
H. Trowelable Underlayments and Patching Compounds: Latex-modified, portland cement-based formulation provided or approved by manufacturer of tile-setting materials for installations indicated.
I. Metal Edge Strips: Profile, model and manufacturer as indicated on Drawings, satin stainless steel.
J. Tile Installation: Comply with TCNA's "Handbook for Ceramic, Glass, and Stone Tile Installation" for TCNA installation method. Install ceramic tile in accordance with TCNA W202E; thinset mortar on waterproofing membrane on cementitous tile backer board and high-performance grout.
K. Jointing Pattern: Lay tile in patterns as indicated on Drawings. Lay out tile work and center tile fields in both directions in each space or on each wall area. Lay out tile work to minimize the use of pieces that are less than half of a tile. Provide uniform joint widths unless otherwise indicated.
L. Metal Edge Strips: Install at edge of tile areas where indicated on Drawings.

SECTION 09910 - PAINTING

A. Provide surface preparation and application of paint systems on exterior and interior substrates. Paint exposed surfaces unless otherwise indicated.
B. Project Conditions: Apply paints only when temperature of surfaces to be painted and ambient air temperatures are range directed by manufacturers' application instructions. Do not apply paints in snow, rain, fog, or mist; when relative humidity exceeds 85 percent; at temperatures less than 5 deg F above the dew point; or to damp or wet surfaces.
C. MPI (Master Painters Institute) Standards: Provide products that comply with MPI standards indicated and that are listed in its "MPI Approved Products List".
D. Material Compatibility: Provide materials that are compatible with one another and with substrates. Provide products which represent top-of-the-line for product type of manufacturer. For each coat in a paint system, provide products recommended in writing by manufacturers of topcoat for use in paint system and on substrate indicated.
E. Remove hardware, lighting fixtures, and similar items that are not to be painted. Mask items that cannot be removed. Reinstall items in each area after painting is complete.
F. Clean substrates of substances that could impair bond of paints, including dust, dirt, oil, grease, and incompatible paints and encapsulants.
G. Apply paints according to manufacturer's written instructions and recommendations in "MPI (Master Painters Institute) Manual". Use brushes only for exterior painting and where the use of other applicators is not practical. Use rollers for finish coat on interior walls and ceilings.
H. Apply paints to produce surface films without cloudiness, spotting, holidays, laps, brush marks, roller tracking, runs, sags, ropiness, or other surface imperfections. Cut in sharp lines and color breaks. If undercoats or other conditions show through topcoat, apply additional coats until cured film has a uniform paint finish, color, and appearance.
I. Paint System for Pre-primed Fiber-Cement Siding and Trim: Latex low-sheen; two coats latex, exterior, low sheen (Gloss Level 3-4) (MPI #15).
J. Paint System for Exterior Steel: Alkyd gloss enamel; two coats alkyd, exterior, gloss enamel (MPI #9) over alkyd, rust-inhibitive primer (MPI #79) or factory applied compatible primer.
K. Paint System Exterior Galvanized Metal and Doors and Frames of Project: Alkyd gloss enamel; two coats alkyd, exterior, gloss enamel (MPI #9) over primer recommended by topcoat manufacturer for exterior use on galvanized-metal substrates for topcoat used.
L. Paint System for Interior Concrete Masonry: Two coats light industrial coating, interior, water based, semi-gloss (MPI #153) over one coat block filler, latex, interior/exterior (MPI #4)
M. Paint System for Pre-primed Interior Fiber Cement Substrates: Latex, interior, semi-gloss (MPI #54), two coats over factory applied primer.
N. Paint System for Interior Steel: Light industrial direct-to-metal coating, interior, water-based, semi-gloss (MPI # 153), 2 coats over factory applied primer or 1 coat field applied rust-inhibitive, water-based primer (MPI #107).
O. Paint System for Interior Galvanized Metal: Light industrial direct-to-metal coating, interior, water-based, semi-gloss (MPI #153), 2 coats over water-base primer for galvanized metal (MPI #134).
P. Colors: Match colors referenced on Drawings. Paint manufacturer utilized is not limited by paint manufacturer listed for color referencing purposes.

SECTION 09965 - CONCRETE FLOOR SEALERS

A. Provide sealer for concrete floors.
B. Submit Product Data.
C. Concrete Epoxy Floor Sealer: Two-component, epoxy crack healer and penetrating sealer for concrete floors where indicated on Drawings. Product and Manufacturer: Sikadur 55 SLV as manufactured by Sika Corporation, Lyndhurst, NJ, or approved substitute.
D. Mix epoxy sealer components in accordance with manufacturer's instructions. Do not thin. Mix only that quantity which can be used within pot life of product.
E. Clean concrete substrates. Provide mechanical means for surface preparation when manufacturer's instructions indicate such methods be performed due to conditions of substrate.
F. Allow substrate to dry fully after cleaning methods using water.
G. Apply sealer in accordance with manufacturer's instructions. Apply with flat squeegee or broom. Allow material to pond over cracks. Let material penetrate into cracks and substrate. Remove excess with roller leaving no visible surface film.

SECTION 10440 - SIGNAGE

A. Provide restroom identification signage.
B. Submit Product Date and Shop Drawings.
C. Signage: Sheet aluminum with baked enamel finish. Provide with verbiage and font style indicated on Drawings.
D. Fasteners: Manufacturer's recommended fasteners of stainless steel.
E. Installation: Install at locations indicated, level, and plumb.

SECTION 10170 - PHENOLIC TOILET COMPARTMENTS

A. Provide phenolic toilet compartments.
B. Toilet-Enclosure Construction: Overhead braced type using solid phenolic doors and pilasters. Color and manufacturer indicated on Drawings or approved substitute.
C. Hardware: Stainless steel pilaster shoes, chrome finish stirrup type brackets, manufacturer's standard chrome finish hinges, latch and keeper, coat hook and door pull.
D. Anchorages and Fasteners: Manufacturer's recommended fasteners of stainless steel.
E. Fabrication: Fabricate toilet compartment components to sizes indicated. Provide 24-inch-wide doors for standard toilet compartments and 36-inch-wide doors with a minimum 32-inch-clear opening for accessible compartments. Use hinges that are self-closing and can be adjusted to hold doors open at any angle up to 90 degrees.
F. Installation: Comply with manufacturer's written installation instructions. Install units rigid, straight, level, and plumb. Secure units in position with manufacturer's recommended anchoring devices. Adjust and lubricate hardware for proper operation. Set hinges to hold doors open approximately 30 degrees from closed position when unlatched.

SECTION 10800 - TOILET ACCESSORIES

A. Provide toilet accessories.
B. Accessories Types: Models and manufacturers indicated on Drawings, or approved substitute. Satin stainless steel finish typical.
C. Install accessories according to manufacturers' written instructions, using fasteners appropriate to substrate indicated and recommended by unit manufacturer. Install units level, plumb, and firmly anchored in locations and at heights indicated.
D. Grab Bars: Install to withstand a downward load of at least 250 lbf, when tested according to ASTM F446.

SECTION 12310 - STAINLESS STEEL COUNTERTOPS

A. Provide stainless steel countertops.
B. Submittals: Submit Shop Drawings including plans, sections, details, and attachments to other work. Detail fabrication and installation, including field joints.
C. Stainless Steel Sheet: ASTM A240, Type 304.
D. Joint Sealant: Mildew-resistant, single component, nonsag, neutral curing, silicone type.
E. Anchorages and Fasteners: Fabricated from stainless steel.
F. Fabrication: Fabricate countertops and backsplashes to sizes indicated. Provide shop fabricated countertops and backsplashes of pressure preservative treated plywood and lumber covered with stainless steel sheet. Grind and polish surfaces to produce uniform, directional satin finish matching No. 4 finish, with no evidence of welds. Run grain with long dimension of each piece.
G. Installation: Install countertops rigid, straight, level, and plumb. Secure units in position with manufacturer's recommended anchoring devices.
H. Seal junctures of tops, splashes, and walls with mildew-resistant silicone sealant.

SECTION 12320 - MANUFACTURED CASEWORK

A. Provide melamine-faced, open shelving cabinets at Concessions.
B. Submittals: Submit Product Data for cabinets. Submit Shop Drawings including plans, elevations, details, and attachments to other work. Submit Samples for melamine finish selection.
C. Environmental Limitations: Do not deliver or install casework until building is enclosed, wet work is complete and dry, and temporary HVAC system is operating and maintaining temperature and humidity conditions at occupancy levels during the remainder of the construction period.
D. Quality Standard: Provide cabinets that comply with or exceed Kitchen Cabinet Manufacturers Association Standard KCMA A161.1. Cabinet color as selected by Architect from manufacturer's standard options.
E. Cabinet Fabrication: Cabinet boxes and shelves fabricated from thermoset decorative panels consisting of medium-density particleboard with surface of thermally fused melamine-impregnated decorative sheet complying with LMA SAT-1. At exposed panel edges, provide PVC or polyester edge banding complying with LMA EDG-1 matching melamine panel color.
F. Installation: Install cabinets with no variations in flushness of adjoining surfaces; use concealed shims. Where cabinets abut other finished work, scribe and cut for accurate fit. Provide filler strips, scribe strips, and moldings in finish to match cabinet face. Install cabinets level and plumb to a tolerance of 1/8 inch in 8 feet. Fasten cabinets to adjacent units and to backing.

SECTION 15000 - MECHANICAL WORK

A. Provide plumbing for domestic water and sanitary drainage systems, vent piping, fittings, supports, piping insulation, water heater, plumbing fixtures, plumbing accessories, unit heaters, ventilator, ventilation ductwork, ventilation inlets and outlets, for complete plumbing and HVAC work of Project, including coordination with local utility for connection to water supply and sanitary sewerage and provision of water use metering.
B. Installation: Perform work in accordance with equipment manufacturers' instructions and applicable building codes of Project location.

SECTION 16000 - ELECTRICAL WORK

A. Provide conduit, couplings, boxes, box covers, supports, cables, conductors, panelboard, circuit breakers, fuses, grounding, receptacles, switches, light fixtures, cover plates, electrical accessories, and electrician-required HVAC equipment connection work for complete electrical work of Project, including coordination with local utility for provision of power supply and electrical metering.
B. Installation: Perform work in accordance with manufacturer's instructions and appropriate local codes.

PDG
PLANNING DESIGN GROUP
LANDSCAPE ARCHITECTURE • RECREATIONAL DESIGN • LAND PLANNING
5314 S. YALE AVE., SUITE 710, TULSA, OK 74135
918.628.1255 918.628.1256 FAX
WWW.PLANNINGDESIGNGROUP.COM

gsb inc Architects Planners
3555 NW 58TH Street
Suite 700-W
Oklahoma City, OK 73112
T: 405.848.9549
F: 405.848.9783
www.gsb-inc.com

Copyright ©2022 GSB, Inc

Certificate of Authority No. CA-02114
Expires: June 30,2023

PROJECT INFORMATION

PROJECT ADDRESS:

1001 E. ROBINSON ST.,
NORMAN, OKLAHOMA 73071

PROJECT NO.	171511A
DATE	06/03/22
DRAWN BY	CHECKED BY

GRIFFIN SOCCER COMPLEX
PHASE 6
NORMAN, OKLAHOMA

ISSUE/ REVISIONS

NO.	DATE	DESCRIPTION

OWNER:
THE CITY OF NORMAN PARKS & RECREATION
201-C WEST GRAY
NORMAN, OK 73069
(405) 366-5472

BID SET

SPECIFICATIONS

A7.01

GENERAL NOTES

GENERAL

1. STRUCTURAL ELEMENTS ARE NON–SELF SUPPORTING AND REQUIRE INTERACTION WITH OTHER ELEMENTS FOR STABILITY AND RESISTANCE TO LATERAL FORCES. FRAMING AND WALLS SHALL BE TEMPORARILY BRACED BY THE CONTRACTOR UNTIL PERMANENT BRACING, FLOOR AND ROOF DECKS, AND WALLS HAVE BEEN INSTALLED AND CONNECTIONS BETWEEN THESE ELEMENTS HAVE BEEN MADE.
2. THE CONTRACT DOCUMENTS REPRESENT THE FINISHED STRUCTURE AND DO NOT INDICATE THE METHOD OF CONSTRUCTION, UNLESS NOTED OTHERWISE. THE CONTRACTOR IS SOLELY RESPONSIBLE FOR THE MEANS, METHODS, TECHNIQUES, SEQUENCES, AND OPERATION OF CONSTRUCTION AND SAFETY PRECAUTIONS AND PROGRAMS INCIDENTAL THERETO.
3. THE SIZE AND LOCATION OF EQUIPMENT PADS AND PENETRATIONS THROUGH THE STRUCTURE FOR MECHANICAL, ELECTRICAL, AND PLUMBING WORK SHALL BE VERIFIED BY THE CONTRACTOR. PENETRATIONS SHALL BE SUBJECT TO APPROVAL BY THE ENGINEER–OF–RECORD. REFER TO MECHANICAL, ELECTRICAL, AND PLUMBING DRAWINGS FOR OPENING LOCATIONS NOT SHOWN ON THE STRUCTURAL DRAWINGS.
4. USE ONLY DIMENSIONS INDICATED IN THE CONTRACT DOCUMENTS. DO NOT SCALE CONTRACT DOCUMENTS OR USE ANY DIMENSIONS TAKEN FROM ELECTRONIC DRAWING FILES.
5. ASSUME EQUAL SPACING IF NOT INDICATED IN CONTRACT DOCUMENTS.
6. THE SPECIFICATIONS ARE AN INTEGRAL PART OF THE CONTRACT DOCUMENTS AND SHALL BE USED IN CONJUCTION WITH THE CONTRACT DRAWINGS. WHERE REQUIREMENTS INDICATED ON THE CONTRACT DRAWINGS DIFFER FROM THE SPECIFICATIONS, NOTIFY THE ARCHITECT AND THE ENGINEER–OF–RECORD.
7. ARCHITECTURAL, MECHANICAL AND ELECTRICAL COMPONENTS AND SYSTEMS SHALL BE DESIGNED AND CONSTRUCTED TO RESIST SEISMIC FORCES AS DETERMINED IN CHAPTER 13 OF ASCE 7.

FOUNDATIONS

1. FOUNDATION DESIGNS, SUBGRADE PREPARATION NOTES, ARE BASED ON THE RECOMMENDATIONS PROVIDED IN THE GEOTECHNICAL REPORT SUMMARY, BY: CEC DATED: MAY 31, 2022.
2. FOUNDATION DESIGNS ARE BASED ON A NET ALLOWABLE SOIL BEARING CAPACITY OF 2,000 PSF FOR SPREAD FOOTINGS AND FOR CONTINUOUS FOOTINGS.
3. CONTRACTOR AND TESTING LABORATORY REPRESENTATIVE SHALL READ THE GEOTECHNICAL REPORT AND BECOME THOROUGHLY FAMILIAR WITH SITE AND SUBGRADE INFORMATION GIVEN THEREIN. THE CONTRACTOR SHALL BE RESPONSIBLE FOR DETERMINING EXACT QUANTITIES OF CUT AND FILL FOR ESTIMATING AND CONSTRUCTION. SUBGRADE SHALL BE PREPARED AS NOTED IN THE GEOTECHNICAL REPORT.
4. A QUALIFIED AND REGISTERED GEOTECHNICAL ENGINEER, LICENSED IN THE STATE OF OKLAHOMA AND WORKING FOR THE TESTING LABORATORY, SHALL DETERMINE CONFORMANCE OF THE FOUNDATION BEARING STRATA WITH THE FOUNDATION DESIGN CRITERIA ABOVE, AND ALL OTHER CONTRACT DOCUMENTS. TESTING LABORATORY SHALL NOTIFY CONTRACTOR, ARCHITECT AND ENGINEER–OF–RECORD OF ANY CONDITIONS NOT IN ACCORDANCE WITH FOUNDATION DESIGN CRITERIA OR CONTRACT DOCUMENTS.

5 THE SUBGRADE SHALL BE PREPARED AS INDICATED IN THE GEOTECHNICAL REPORT.

6 USE ONLY STRUCTURAL FILL MATERIAL IDENTIFIED IN THE GEOTECHNICAL REPORT FOR FILL BELOW BUILDING AND FIVE FEET BEYOND THE EDGES OF THE BUILDING AND 1 FOOT BEYOND THE EDGES OF PAVING.

7 THE CONTRACTOR SHALL BE RESPONSIBLE FOR DETERMINING EXACT QUANTITIES OF CUT AND FILL FOR ESTIMATING AND CONSTRUCTION.

8 FOUNDATION WALLS SHALL HAVE ADEQUATE TEMPORARY BRACING INSTALLED BY THE CONTRACTOR BEFORE BACKFILL IS PLACED AGAINST THEM. TEMPORARY BRACING SHALL NOT BE REMOVED UNTIL WALL IS PERMANENTLY BRACED.

9 AVOID DAMAGE TO UNDERGROUND UTILITIES INCLUDING, BUT NOT LIMITED TO, WATER MAINS, SANITARY SEWERS AND BURIED CABLES WHICH MIGHT EXTEND ACROSS OR ADJOIN SITE.

10. EXTERIOR FOOTINGS SHALL BEAR AT OR BELOW MINIMUM BEARING DEPTH. MINIMUM BEARING DEPTH IS 24 INCHES BELOW ADJACENT FINISHED GRADE. THICKENED SLAB EDGE FOR STOOPS, CANOPIES, ETC SHALL EXTEND 24 INCHES BELOW GRADE UNLESS NOTED OTHERWISE IN CONTRACT DOCUMENTS.
11. FOOTINGS SHALL BE POURED AGAINST UNDISTURBED SOIL, UNLESS NOTED OTHERWISE IN CONTRACT DOCUMENTS.

CONCRETE

1. MINIMUM COMPRESSIVE STRENGTH (f'c) AT THE END OF 28 DAYS SHALL BE AS FOLLOWS:
   A. SPOT FOOTINGS AND CONTINUOUS WALL FOOTINGS — 3000 PSI
   B. INTERIOR SLABS–ON–GRADE — 3000 PSI
   REFER TO SPECIFICATIONS FOR MAXIMUM WATER/CEMENT RATIOS, MINIMUM CEMENT CONTENTS AND OTHER MIX DESIGN REQUIREMENTS. CONCRETE SHALL BE NORMAL WEIGHT (145 PCF), UNLESS NOTED OTHERWISE.
2. EXTERIOR CONCRETE AND CONCRETE EXPOSED TO FREEZE–THAW CYCLES SHALL BE AIR–ENTRAINED. REFER TO CAST–IN–PLACE CONCRETE SPECIFICATION FOR AIR CONTENT.
3. MATERIALS OR ADMIXTURES SHALL NOT CONTAIN ANY CALCIUM CHLORIDE.
4. REINFORCING STEEL SHALL MEET THE FOLLOWING:
   A. DEFORMED BARS — ASTM A615, GRADE 60
   B. WELDABLE DEFORMED BARS — ASTM A706, GRADE 60
   C. WELDED WIRE FABRIC — ASTM A1064
   D. STEEL FIBERS — ASTM A820
5. WHERE DOWELS ARE INDICATED BUT NOT SIZED, PROVIDE DOWELS THAT MATCH SIZE AND LOCATION OF MAIN REINFORCING STEEL AND LAP SPLICE WITH THE MAIN REINFORCING STEEL. REINFORCING BARS SHALL BE SPLICED AS NOTED IN THE REINFORCING LAP SCHEDULE.
6. REFER TO ACI 318 LATEST EDITION FOR CONCRETE COVER, ACI 315 LATEST EDITION FOR DETAILING PRACTICES AND FABRICATION, AND ACI 301 LATEST EDITION FOR STANDARD PRACTICE FOR MIXING AND PLACING CONCRETE.
7. "C.J." INDICATES SAW CUT CONTRACTION JOINT OR DOWELED CONSTRUCTION JOINT IN SLAB–ON–GRADE. REFERENCE CAST–IN–PLACE CONCRETE SPECIFICATION FOR ACCEPTED SAW CUT METHODS. SLAB POURS SHALL BE SEPARATED BY A DOWELED CONSTRUCTION JOINT. CONTRACTION/CONSTRUCTION JOINTS SHALL BE LOCATED AS SHOWN ON PLANS OR AS DIRECTED BY THE ENGINEER–OF–RECORD.
8. PROVIDE CORNER BARS THAT MATCH AND LAP CONTINUOUS REINFORCEMENT SIZE AND QUANTITY AT INTERSECTIONS AND CORNERS OF WALLS AND FOUNDATIONS.
9. ANCHORS INSTALLED IN HARDENED CONCRETE SHALL ONLY BE USED WHERE SPECIFIED ON THE CONTRACT DRAWING. THE CONTRACTOR SHALL OBTAIN APPROVAL FROM THE ENGINEER–OF–RECORD PRIOR TO INSTALLING POST–INSTALLED ANCHORS IN PLACE OF MISSING OR MISPLACED CAST–IN–PLACE ANCHORS. CARE SHALL BE TAKEN IN PLACING POST–INSTALLED ANCHORS TO AVOID CONFLICTS WITH EXISTING REINFORCING. HOLES SHALL BE DRILLED, DRY AND CLEANED AND ANCHORS INSTALLED IN ACCORDANCE WITH THE MANUFACTURER'S PUBLISHED WRITTEN INSTRUCTIONS AND APPLICABLE ESR REPORT. REFERENCE DETAILS FOR ANCHOR SIZE AND EMBEDMENT. SUBSTITUTION REQUESTS FOR PRODUCTS OTHER THAN THOSE SPECIFIED ON THE CONTRACT DRAWINGS SHALL BE SUBMITTED BY THE CONTRACTOR TO THE ENGINEER–OF–RECORD ALONG WITH CALCULATIONS THAT ARE SIGNED AND SEALED BY THE PROFESSIONAL ENGINEER RESPONSIBLE FOR THEIR PREPARATION AND LICENSED IN THE STATE OF OKLAHOMA.
10. ALL VAPOR RETARDERS SHALL BE STEGO WRAP 15–MILL CLASS A VAPOR RETARDER OR APPROVED EQUAL UNLESS MORE STRINGENT REQUIREMENTS ARE SHOWN IN SPECIFICATIONS.

MASONRY

1. CONCRETE MASONRY UNITS SHALL MEET ASTM SPECIFICATION C90, WITH A MINIMUM UNIT COMPRESSIVE STRENGTH = 1900 PSI. THE SPECIFIED DESIGN COMPRESSIVE STRENGTH OF THE CONCRETE MASONRY ASSEMBLY (f'm) SHALL BE 2000 PSI.
2. MORTAR SHALL BE A PREBLENDED DRY MIX CONFORMING TO ASTM C1714 AND MEETING THE PROPERTY SPECIFICATIONS OF ASTM C270 TYPE "S" MORTAR. MASONRY CEMENT SHALL NOT BE USED FOR MORTAR.
3. GROUT SHALL MEET ASTM SPECIFICTION C476 AND HAVE A MINIMUM 28 DAY COMPRESSIVE STRENGTH OF 2000 PSI.
4. SOLID GROUT HOLLOW MASONRY CELLS AS NOTED ON STRUCTURAL DRAWINGS. USE GROUT METHOD OF CONSTRUCTION CONFORMING TO REQUIREMENTS OF CURRENT MSJC. GROUT SPACE DIMENSIONS AND MAXIMUM POUR HEIGHTS SHALL COMPLY WITH MSJC.
   A. LIMIT THE HEIGHT OF VERTICAL GROUT POURS TO 12'–8" OR THE DISTANCE BETWEEN BOND BEAMS, WHICHEVER IS LESS. PROVIDE CLEANOUTS AT THE GROUT LIFTS THAT EXCEED 5'–4" IN HEIGHT.
   B. PROVIDE CLEANOUTS AT THE BOTTOM COURSE OF MASONRY FOR EACH GROUT POUR OVER 5'–4" IN HEIGHT. PROVIDE CLEANOUTS AT 32 INCHES ON CENTER ALONG THE BOTTOM COURSE OF THE GROUT LIFTS IN FULLY GROUTED MASONRY. USE CLEANOUTS TO REMOVE ALL MORTAR DROPPINGS AND DEBRIS AND ENSURE PROPER PLACEMENT OF REINFORCEMENT.
   C. DO NOT PLACE GROUT UNTIL HEIGHT OF MASONRY TO BE GROUTED HAS ATTAINED ENOUGH STRENGTH TO RESIST GROUT PRESSURE. ALLOW MASONRY TO CURE A MINIMUM OF 4 HOURS PRIOR TO PLACING GROUT FOR LIFTS BETWEEN 5'–4" AND 12'–8. INCREASE CURING TIME TO A MINIMUM OF 8 HOURS IN COLD OR DRY WEATHER CONDITIONS.. THE GROUT SLUMP SHALL BE MAINTAINED BETWEEN 10 AND 11 INCHES FOR GROUT LIFTS BETWEEN 5'–4" AND 12'–8".
   D. GROUTING SHALL BE A CONTINUOUS PROCEDURE FOR EACH LIFT. DO NOT ALLOW HORIZONTAL CONSTRUCTION JOINT TO FORM BY DISCONTINUING GROUTING.
   E. VERTICAL GROUT POUR EXCEEDING 12 INCHES SHALL BE MECHANICALLY CONSOLIDATED USING A VIBRATOR WITH A MAXIMUM 3/4 INCH DIAMETER HEAD.
5. CONTRACTOR SHALL CLEAN THE GROUT SPACES SUCH THAT THEY ARE FREE OF MORTAR DROPPINGS, DEBRIS, LOOSE AGGREGATES AND ANY MATERIAL THAT WOULD PREVENT CONTINUITY OF THE GROUT.
6. HORIZONTAL JOINT REINFORCEMENT SHALL BE LADDER TYPE. JOINT REINFORCEMENT SHALL BE SPACED AT 8 INCHES ON CENTER BELOW FINISHED FLOOR AND IN PARAPETS, AND 16 INCHES ON CENTER ABOVE FINISHED FLOOR.
7. CONCRETE MASONRY SHALL BE LAID IN RUNNING BOND.
8. CONCRETE MASONRY BELOW FINISHED FLOOR SHALL BE NORMAL WEIGHT UNITS AND SHALL HAVE ALL THE CELLS FULLY GROUTED. CONCRETE MASONRY ABOVE FINISHED FLOOR SHALL BE MEDIUM WEIGHT OR LIGHT WEIGHT AND IS TO BE GROUTED ONLY AT REINFORCED CELLS AND BOND BEAMS, UNLESS NOTED OTHERWISE. ALL CELLS WITH REINFORCING OR EMBEDDED ITEMS SHALL BE GROUTED SOLID.

GENERAL NOTES

MASONRY (CONTINUED)

9. REFERENCE WALL SECTIONS AND DETAILS FOR MISCELLANEOUS BOND BEAM LOCATIONS AND EMBEDDED ITEMS. USE OPEN KNOCK OUT BOND BEAM BLOCK. DO NOT USE TROUGH TYPE BLOCK FOR BOND BEAMS. DO NOT CONTINUE BOND BEAM REINFORCING THROUGH CONTROL JOINTS, UNLESS NOTED OTHERWISE.
10. REINFORCING STEEL SHALL MEET ASTM SPECIFICATION A615, GRADE 60. REINFORCING STEEL SHALL BE SPLICED AS NOTED IN THE REINFORCING LAP SCHEDULE.
11. PROVIDE TEMPORARY BRACING FOR WALLS, LINTELS, AND OTHER MASONRY DURING ERECTION. BRACING SHALL BE DESIGNED IN ACCORDANCE WITH THE MASON CONTRACTORS ASSOCIATION OF AMERICA STANDARD PRACTICE FOR BRACING MASONRY WALLS UNDER CONSTRUCTION. DESIGN SHALL BE PERFORMED BY AN ENGINEER LICENSED IN THE STATE OF OKLAHOMA. BRACING SHALL REMAIN UNTIL ROOFING AND OTHER STRUCTURAL ELEMENTS ARE COMPLETE AND PROVIDE PERMANENT STABILITY.

PREFABRICATED WOOD TRUSSES

1. WOOD ROOF TRUSS LOADING: REFER TO 6/S3.00C AND 6/S3.00R FOR TRUSS LOADING DIAGRAMS FOR TOP AND BOTTOM CHORDS.
2. MAXIMUM LIVE LOAD DEFLECTION SHALL NOT EXCEED L/480 FOR FLOOR AND L/240 FOR ROOF. MAXIMUM TOTAL LOAD DEFLECTION SHALL NOT EXCEED L/240 FOR FLOOR AND L/180 FOR ROOF. MAXIMUM TOTAL LOAD DEFLECTION SHALL NOT EXCEED 1", WHICHEVER IS MORE STRINGENT.
3. TRUSSES AND CONNECTOR PLATES SHALL BE DESIGNED IN ACCORDANCE WITH THE LATEST REVISION OF THE TRUSS PLATE INSTITUTE SPECS. AND ALL APPLICABLE BUILDING CODES.
4. TRUSS MANUFACTURER SHALL ARRANGE TRUSS WEB MEMBERS AS REQUIRED BY DESIGN. REFER TO PLAN NOTES FOR REQUESTED LOCATIONS OF ACCESS REQUIRED FOR MECH. RUNS AND STRUCTURE ATTACHMENT POINTS. COORDINATE TRUSS LENGTHS, PROFILES, ETC. WITH ARCHITECTURAL DRAWINGS PRIOR TO FABRICATION.
5. TRUSSES SHALL BE FABRICATED WITH MINIMUM 20 GAUGE TRUSS PLATES HAVING A MINIMUM WOOD PENETRATION OF 0.37 INCH.
6. FRAMING PLANS INDICATE THE REQUIRED BASIC TRUSS LAYOUT. SIGNIFICANT DEVIATIONS FROM THESE PLANS WILL NOT BE PERMITTED UNLESS APPROVED BY THE ARCH. AND ENGINEER OF RECORD.
7. TRUSS DESIGNER SHALL DESIGN THE TRUSS TO GIRDER AND THE TRUSS GIRDER TO SUPPORT CONNECTIONS, U.N.O. ON THE DETAILS.
8. PROPER ERECTION BRACING SHALL BE INSTALLED TO HOLD THE TRUSSES TRUE AND PLUMB AND IN SAFE CONDITION UNTIL PERMANENT TRUSS BRACING AND BRIDGING CAN BE SOLIDLY NAILED IN PLACE TO FORM A STRUCTURALLY SOUND FRAMING SYSTEM. ALL ERECTION AND PERMANENT BRACING SHALL BE INSTALLED AND ALL COMPONENTS PERMANENTLY FASTENED BEFORE THE APPLICATION OF ANY LOADS TO THE TRUSSES. ALL BRACING SHALL BE DESIGNED BY MANUFACTURER AND INDICATED ON SHOP DRAWINGS. ALL PREFABRICATED WOOD TRUSSES ARE TO BE INSTALLED IN ACCORDANCE WITH THE TRUSS PLATE INSTITUTE'S, "HANDLING, INSTALLING AND BRACING METAL PLATE CONNECTED WOOD TRUSSES, HIB–91". DESIGN OF ROOF TRUSSES SHALL BE PERFORMED BY A STRUCTURAL ENGINEER LICENSED IN STATE OF OKLAHOMA.
9. TRUSSES ARE NOT DESIGNED TO SUPPORT FUTURE MECHANICAL EQUIPMENT.
10. ALL TRUSSES ARE SPACED AT 24" O.C. MAXIMUM, UNLESS OTHERWISE NOTED ON THE FRAMING PLANS.
11. TRUSS MANUFACTURER SHALL SUBMIT STRUCTURAL CALCULATIONS SIGNED AND SEALED BY A PROFESSIONAL ENGINEER REGISTERED IN THE STATE OF OKLAHOMA ALONG WITH SHOP DRAWINGS INCLUDING AN ERECTION DRAWING SHOWING TRUSS LAYOUT AND COMPONENTS TO ARCHITECT AND ENGINEER OF RECORD FOR APPROVAL PRIOR TO STARTING FABRICATION OF TRUSSES AND COMPONENTS.
12. TRUSS MANUFACTURER SHALL DESIGN PERMANENT BOTTOM CHORD BRIDGING TO BE SUPPLIED BY THE CONTRACTOR AS REQ'D. CONTRACTOR SHALL BRACE TRUSSES DURING ERECTION UNTIL ALL BRIDGING AND SHEATHING IS INSTALLED.
13. TRUSS DESIGNER SHALL PROVIDE SHEAR PANELS AND DRAG TRUSSES AS INDICATED ON SHEETS AND STRUCTURAL DETAILS. COMPONENTS SHALL BE DESIGNED BY A LICENSED ENGINEER IN THE STATE OF OKLAHOMA AND SHALL BE INCLUDED IN THE TRUSS SHOP DRAWING SUBMITTAL.
14. TRUSS MANUFACTURER SHALL BE A TRUSS PLATE INSTITUTE LICENSED FACILITY AND APPROVED AND CURRENTLY REGISTERED TO PERFORM FABRICATION WORK WITHOUT SPECIAL INSPECTIONS.

WOOD FRAMING

1. WOOD FRAMING SHALL MEET THE FOLLOWING MINIMUM STRESS PROPERTIES:
   A. STRUCTURAL FRAMING 2–4 INCHES THICK, 2 INCHES AND WIDER, DOUGLAS–FIR LARCH #2 OR BETTER,
   PER 2015 NDS
   1. Fb = 900 PSI (SINGLE MEMBER USE)
   2. Ft = 575 PSI
   3. Fc = 1,350 PSI (PARALLEL TO GRAIN)
   4. Fc = 625 PSI (PERPENDICULAR TO GRAIN)
   5. Fv = 180 PSI
   6. E = 1,600,000 PSI
2. PROVIDE SIMPSON STRONG–TIE CONNECTORS OR EQUIVALENT FOR WOOD FRAMING CONNECTING TO SUPPORTING MEMBERS. USE STRONG–TIE CONNECTORS AND NAILS OF APPROPRIATE SIZE AND CAPACITY FOR THE SUPPORTED MEMBER AND INSTALL ACCORDING TO THE MANUFACTURER'S SPECIFICATIONS.
3. ROOF SHEATHING SHALL BE EITHER APA RATED PLYWOOD C–D WITH EXTERIOR GLUE (EXPOSURE 1) OR ORIENTED STRAND BOARD (OSB) WITH EXTERIOR GLUE (EXPOSURE 1), AND SHALL BEAR THE STAMP OF AN APPROVED TESTING AGENCY.
4. INSTALL ROOF SHEATHING WITH THE LONG DIMENSION OF THE PANEL PERPENDICULAR TO SUPPORTS UNLESS NOTED OTHERWISE IN CONTRACT DOCUMENTS, AND WITH PANEL CONTINUOUS OVER TWO OR MORE SPANS. STAGGER END JOINTS.
5. ALL ROOF SHEATHING SHALL BE APA RATED EXPOSURE 1 SHEATHING. RE: ROOF FRAMING PLANS AND 3/S3.00C AND 3/S3.00R FOR ATTACHMENT.
6. ALL JOISTS SHALL HAVE DIAGONAL BRIDGING OR FULL DEPTH BLOCKING AT 8'–0" ON CENTER MAXIMUM ALONG THE SPAN AND AT SUPPORTING BEAMS OR WALLS.
7. CUTTING, BORING OR NOTCHING OF FRAMING MEMBERS, IF REQUIRED, SHALL CONFORM TO THE LIMITATIONS PRESCRIBED BY THE INTERNATIONAL BUILDING CODE AND MAY BE DISALLOWED FOR SOME FRAMING MEMBERS BY THE ENGINEER–OF–RECORD.
8. ALL WOOD IN CONTACT WITH CONCRETE AND EXTERIOR MASONRY SHALL BE PRESSURE TREATED.
9. REFER TO THE 2015 INTERNATIONAL BUILDING CODE TABLE 2304.9.1 FOR MINIMUM FASTENING CRITERIA. ALL NAILS TO BE COMMON WIRE SIZE.
10. MOISTURE CONTENT OF ALL WOOD MEMBERS SHALL NOT EXCEED 19%.
11. NAILING SHALL COMPLY WITH REQUIREMENTS OF NAILING SCHEDULE UNLESS NOTED OTHERWISE IN CONTRACT DOCUMENTS.

STRUCTURAL STEEL

1. STRUCTURAL STEEL SHALL MEET THE FOLLOWING MINIMUM YIELD STRESS (Fy):

	YIELD	ASTM SPECIFICATION
A. W, WT SHAPES:	50 KSI	A992
B. BARS, PLATES, CHANNELS, ANGLES:	36 KSI	A36
C. SQUARE, RECTANGULAR HSS:	50 KSI	A500, GRADE C
D. ROUND HSS:	46 KSI	A500, GRADE C
E. STRUCTURAL STEEL PIPE:	35 KSI	A53, GRADE B
F. ANCHOR RODS:	36 KSI	F1554
G. ALL–THREAD RODS:	36 KSI	A36
H. HEADED STUD ANCHORS:	65 KSI TENSILE STRESS	A108, GRADES 1010–1020

2. BOLTS FOR STEEL BEAM AND COLUMN CONNECTIONS SHALL BE 3/4–INCH DIAMETER (MIN.) ASTM F3125, GRADE A325–N HIGH–STRENGTH BOLTS UNLESS NOTED OTHERWISE IN CONTRACT DOCUMENTS.
3. ALL BOLTED JOINTS SHALL BE SNUG TIGHT UNLESS NOTED OTHERWISE IN CONTRACT DOCUMENTS . FOR PRETENSIONED OR SLIP–CRITICAL JOINTS, THE METHOD OF INSTALLATION SHALL BE TURN–OF–NUT WITH MATCH MARKING, TWIST–OFF–TYPE TENSION CONTROL BOLT ASSEMBLIES (ASTM F3125, GRADE F1852), OR DIRECT TENSION INDICATORS (ASTM F959).
4. WELDING SHALL MEET ANSI / AWS D1.1, STRUCTURAL WELDING CODE LATEST REVISION. ELECTRODES SHALL BE 70 KSI, LOW HYDROGEN.
5. WELDS NOT SPECIFICALLY SIZED ON THE STRUCTURAL DRAWINGS SHALL BE THE MINIMUM SIZE PER THE LATEST AWS D1.1.
6. PROVIDE DOUBLE NUTS AND DOUBLE WASHERS FOR STEEL COLUMN ANCHOR BOLTS TO ALLOW FOR ADJUSTMENT IN BASE PLATE ELEVATION. PROVIDE 1 1/2 INCH NON–SHRINK GROUT UNDER BASE PLATE AFTER ERECTION. USE 2 1/2 INCH NON–SHRINK GROUT WHEN COLUMN ANCHOR BOLTS ARE 1 1/4 INCH DIAMETER OR LARGER. NON–SHRINK GROUT SHALL BE NON–METALLIC WITH A MINIMUM COMPRESSIVE STRENGTH OF 5,000 PSI AT 28 DAYS.
7. LEDGER ANGLES AND LINTELS IN EXTERIOR WALL SYSTEMS SHALL BE HOT DIP GALVANIZED PER ASTM A123.
8. THE GENERAL CONTRACTOR SHALL BE RESPONSIBLE FOR INCLUDING THE COSTS FOR ALL MISCELLANEOUS STEEL SHOWN IN THE CONTRACT DOCUMENTS. THESE COSTS SHALL INCLUDE, BUT ARE NOT LIMITED TO, MISCELLANEOUS STEEL ITEMS SHOWN ON THE STRUCTURAL, ARCHITECTURAL, CIVIL, MECHANICAL, PLUMBING AND ELECTRICAL DRAWINGS AND IN THE SPECIFICATIONS.
9. AT ALL GALVANIZED OR PAINTED STEEL MEMBERS WITH FIELD WELDED CONNECTIONS, REMOVE GALVANIZING, PAINT OR PRIMER PRIOR TO FIELD WELDING AS REQUIRED. AFTER WELDING IS COMPLETE AND INSPECTOR APPROVED, PREPARE AND REPAINT THE FRAMING SURFACES.
10. CONTRACTOR TO GRIND SMOOTH ALL EXPOSED WELDS.

ABBREVIATIONS

A.B.	ANCHOR BOLTS	LBS.	POUNDS
A.F.F.	ABOVE FINISHED FLOOR	LLH	LONG LEG HORIZONTAL
ACI	AMERICAN CONCRETE INSTITUTE	LLV	LONG LEG VERTICAL
AESS	ARCHITECTURALLY EXPOSED STRUCTURAL STEEL	LONG.	LONGITUDINAL
		MAX.	MAXIMUM
ARCH.	ARCHITECTURAL	M.C.J.	MASONRY CONTROL JOINT
B.L.	BLOCK LINTEL	MECH.	MECHANICAL
B.O.	BOTTOM OF	MFR.	MANUFACTURER
B.O.D.	BOTTOM OF DECK	MIN.	MINIMUM
BAL.	BALANCE	MISC.	MISCELLANEOUS
BLDG.	BUILDING	N.I.C.	NOT IN CONTRACT
BRG.	BEARING	N.S.	NEAR SIDE
C.J.	CONTRACTION JOINT	N.T.S.	NOT TO SCALE
C.L.	CENTER LINE	NO.	NUMBER
CLR.	CLEAR	O.C.	ON CENTER
CMU	CONCRETE MASONRY UNIT	O.D.	OUTSIDE DIAMETER
COL.	COLUMN	O.H.	OPPOSITE HAND
CONC.	CONCRETE	P.A.F.	POWER ACTUATED FASTENER
CONST.	CONSTRUCTION	P.M.E.J	PREMOLDED EXPANSION JOINT
CONT.	CONTINUOUS	PCF	POUNDS PER CUBIC FOOT
D.B.A.	DEFORMED BAR ANCHOR	PLF	POUNDS PER LINEAR FOOT
DIA.	DIAMETER	PSF	POUNDS PER SQUARE FOOT
DWG.	DRAWING	PSI	POUNDS PER SQUARE INCH
E.F.	EACH FACE	QTY.	QUANTITY
E.J.	EXPANSION JOINT	R.O.	ROUGH OPENING
E.O.D.	EDGE OF DECK	RE:	REFER
E.O.S.	EDGE OF SLAB	REINF.	REINFORCING
E.W.	EACH WAY	REQD.	REQUIRED
ELEV.	ELEVATION	RTU	ROOF TOP UNIT
EQ.	EQUAL	S.D.S.	SELF–DRILLING SCREWS
EXIST.	EXISTING	SCHED.	SCHEDULE
F.F.E.	FINISHED FLOOR ELEVATION	SIM.	SIMILAR
F.S.	FAR SIDE	SPECS.	SPECIFICATIONS
FDN.	FOUNDATION	STD.	STANDARD
FTG.	FOOTING	STL.	STEEL
G.B.	GRADE BEAM	T&B	TOP AND BOTTOM
GA.	GAGE	T.O.	TOP OF
GALV.	GALVANIZED	T.O.P.	TOP OF PIER
H.S.A.	HEADED STUD ANCHOR	T.O.W.	TOP OF WALL
HORIZ.	HORIZONTAL	TRANS.	TRANSVERSE
IBC	INTERNATIONAL BUILDING CODE	TYP.	TYPICAL
INFO.	INFORMATION	U.N.O.	UNLESS NOTED OTHERWISE
J.B.E.	JOIST BEARING ELEVATION	VERT.	VERTICAL
JT.	JOINT	W.P.	WORK POINT
K	UNIT OF 1,000 POUNDS (KIP)	W.W.F.	WELDED WIRE FABRIC
KSI	KIPS PER SQUARE INCH	WT.	WEIGHT

SPECIAL INSPECTION REQUIREMENTS

SPECIAL INSPECTION REQUIREMENTS IBC 2015 CHAPTER 17:

1. THE OWNER OR OWNER'S AUTHORIZED AGENT SHALL EMPLOY ONE OR MORE SPECIAL INSPECTORS TO PROVIDE INSPECTIONS DURING CONSTRUCTION ON THE TYPES OF WORK LISTED IN THE STATEMENT OF SPECIAL INSPECTIONS PER SECTION 1704 OF THE IBC. THE SPECIAL INSPECTOR SHALL BE A QUALIFIED PERSON WHO SHALL DEMONSTRATE COMPETENCE, TO THE SATISFACTION OF THE BUILDING OFFICIAL, FOR INSPECTION OF THE PARTICULAR TYPE OF CONSTRUCTION OR OPERATION REQUIRING SPECIAL INSPECTION. THESE INSPECTIONS ARE IN ADDITION TO THE INSPECTIONS SPECIFIED IN THE PROJECT SPECIFICATIONS.
2. SPECIAL INSPECTORS SHALL KEEP RECORDS OF INSPECTIONS. THE SPECIAL INSPECTOR SHALL FURNISH INSPECTION REPORTS TO THE BUILDING OFFICIAL, AND TO THE REGISTERED DESIGN PROFESSIONAL IN RESPONSIBLE CHARGE. REPORTS SHALL INDICATE THAT WORK INSPECTED WAS DONE IN CONFORMANCE TO APPROVED CONSTRUCTION DOCUMENTS. DISCREPANCIES SHALL BE BROUGHT TO THE IMMEDIATE ATTENTION OF THE CONTRACTOR FOR CORRECTION. IF THE DISCREPANCIES ARE NOT CORRECTED, THE DISCREPANCIES SHALL BE BROUGHT TO THE ATTENTION OF THE BUILDING OFFICIAL AND TO THE REGISTERED DESIGN PROFESSIONAL IN RESPONSIBLE CHARGE PRIOR TO COMPLETION OF THAT PHASE OF WORK. A FINAL REPORT DOCUMENTING REQUIRED SPECIAL INSPECTIONS AND CORRECTION OF ANY DISCREPANCIES NOTED IN THE INSPECTIONS SHALL BE SUBMITTED AT A POINT IN TIME AGREED UPON BY THE PERMIT APPLICANT AND THE BUILDING OFFICIAL PRIOR TO THE START OF WORK.
3. THE CONTRACTOR IS RESPONSIBLE FOR NOTIFYING THE SPECIAL INSPECTOR REGARDING INDIVIDUAL INSPECTION FOR ITEMS LISTED ON THE STATEMENT OF SPECIAL INSPECTIONS AND AS NOTED ON THE BUILDING DEPARTMENT APPROVED PLANS. ADEQUATE NOTICE AND ACCESS TO APPROVED PLANS SHALL BE PROVIDED SO THAT THE SPECIAL INSPECTOR HAS TIME TO BECOME FAMILIAR WITH THE PROJECT.
4. FABRICATORS OF STRUCTURAL LOAD–BEARING MEMBERS AND ASSEMBLIES SHALL CONFORM TO THE REQUIREMENTS OF SECTION 1704.2.5 OF THE IBC.

DESIGN PARAMETERS

1. BUILDING CODE .... IBC 2015
   RISK CATEGORY II
2. LIVE LOADS
   A. ROOF .... 20 PSF
   B. MATERIAL CODES AND STANDARDS
   DESIGN LOADS:
   ASCE 7–10 – MINIMUM DESIGN LOADS FOR BUILDINGS AND OTHER STRUCTURES
   CONCRETE:
   ACI 318–14 – BUILDING CODE REQUIREMENTS FOR STRUCTURAL CONCRETE
   STEEL:
   AISC 360–10 – SPECIFICATIONS FOR STRUCTURAL STEEL BUILDINGS
   MASONRY:
   AISC 530–13 – BUILDING CODE REQUIREMENTS FOR MASONRY STRUCTURES
3. ROOF SNOW LOAD
   A. GROUND SNOW LOAD, Pg .... 10 PSF
   B. FLAT ROOF SNOW LOAD, Pf .... 7 PSF
   C. SNOW LOAD IMPORTANCE FACTOR, I 1.0
   D. SNOW EXPOSURE FACTOR, Ce 1.0
   E. THERMAL FACTOR, Ct 1.0
4. WIND DESIGN DATA
   A. ULTIMATE DESIGN WIND SPEED (3 SECOND GUST), Vult — 115 MPH
   B. WIND EXPOSURE CATEGORY — C
   C. INTERNAL PRESSURE COEFFICIENT, GCpi — +/– 0.18
   D. DESIGN WIND PRESSURE ON COMPONENTS AND CLADDING

ROOF PRESSURES (1.0W)		
	EFFECTIVE TRIBUTARY AREA	
	≤10 SQ.FT.	≥100 SQ.FT.
ZONE 1	26.4 PSF	24.0 PSF
ZONE 2	46.0 PSF	33.8 PSF
ZONE 3	68.0 PSF	53.3 PSF
ZONE 1,2&3	16.6 PSF	16.0 PSF

WALL PRESSURES (1.0W)		
	EFFECTIVE TRIBUTARY AREA	
	10 SQ.FT.	30 SQ.FT.
ZONE 4	31.3 PSF	29.2 PSF
ZONE 5	38.6 PSF	34.5 PSF
ZONE 4&5	28.9 PSF	26.8 PSF

NOTES:
1. RE: ASCE 7–10 FIGURES 30.4–1 AND 30.4–2A.
2. REFER TO CODE FOR EFFECTIVE TRIBUTARY AREAS NOT LISTED.
3. POSITIVE VALUES SIGNIFY PRESSURES ACTING TOWARD THE NOTED SURFACE AND NEGATIVE VALUES SIGNIFY PRESSURES ACTING AWAY FOR THE NOTED SURFACE.

   E. WIDTH OF END ZONE — 3.0 FT

5. SEISMIC DESIGN DATA
   A. SEISMIC IMPORTANCE FACTOR, Ie 1.0
   B. ANALYSIS PROCEDURE .... EQUIVALENT LATERAL FORCE
   C. MAPPED SPECTRAL RESPONSE ACCELERATION PARAMETER, Ss 0.269
   D. MAPPED SPECTRAL RESPONSE ACCELERATION PARAMETER, S1 .... 0.079
   E. SITE CLASS .... D
   F. DESIGN SPECTRAL RESPONSE ACCELERATION PARAMETER, Sds 0.284
   G. DESIGN SPECTRAL RESPONSE ACCELERATION PARAMETER, Sd1 .... 0.126
   H. SEISMIC DESIGN CATEGORY .... B
   J. STRUCTURAL SYSTEM 1
   1.) BASIC STRUCTURAL SYSTEM .... BEARING WALL SYSTEMS
   2.) SEISMIC FORCE RESISTING SYSTEM .... ORDINARY REINFORCED MASONRY SHEAR WALLS
   3.) RESPONSE MODIFICATION FACTOR 2
   4.) SEISMIC RESPONCE COEFFICIENT, Cs (LRFD) 0.142

wallace design collective

wallace design collective, pc
structural · civil · landscape · survey
410 north walnut avenue, suite 200
oklahoma city, oklahoma 73104
405.236.5858 · 800.364.5858

BID SET

PDG
PLANNING DESIGN GROUP
LANDSCAPE ARCHITECTURE • RECREATIONAL DESIGN • LAND PLANNING
5314 S. YALE AVE., SUITE 710, TULSA, OK 74135
918.628.1255 918.628.1256 FAX
WWW.PLANNINGDESIGNGROUP.COM

gsb inc
3555 NW 58TH Street
Suite 700-W
Oklahoma City, OK 73112
T: 405.848.9549
F: 405.848.9783
www.gsb-inc.com

Copyright © 2022 GSB, Inc

LICENSED STRUCTURAL ENGINEER
DAVID LEE ZUK
21423
OKLAHOMA
06-03-2022
OKLAHOMA CERTIFICATE OF AUTHORIZATION #1460
EXPIRATION DATE: 06/30/2023

PROJECT INFORMATION

PROJECT ADDRESS:

1001 E. ROBINSON ST.,
NORMAN, OKLAHOMA 73071

PROJECT NO.	171511A
DATE	06/03/22
DRAWN BY	CHECKED BY
JL	IG/DZ

GRIFFIN SOCCER COMPLEX
PHASE 6
NORMAN, OKLAHOMA

ISSUE/ REVISIONS

NO.	DATE	DESCRIPTION

OWNER:

THE CITY OF NORMAN PARKS & RECREATION
201-C WEST GRAY
NORMAN, OK 73069
(405) 366-5472

GENERAL NOTES

S0.00

AISC 360–10 SPECIAL INSPECTION REQUIREMENTS

1. QUALITY CONTROL (QC) SHALL BE PROVIDED BY THE FABRICATOR AND ERECTOR.
2. QUALITY ASSURANCE (QA) SHALL BE PROVIDED BY OTHERS. NONDESTRUCTIVE TESTIING (NDT) SHALL BE PERFORMED BY THE AGENCY OR FIRM RESPONSIBLE FOR QUALITY ASSURANCE.
3. NONDESTRUCTIVE TESTIING (NDT) SHALL BE PERFORMED BY THE AGENCY OR FIRM RESPONSIBLE FOR QUALITY ASSURANCE (QA).
4. QUALITY ASSURANCE (QA) INSPECTION OF FABRICATED ITEMS SHALL BE MADE AT THE FABRICATOR'S PLANT.
5. QA INSPECTION OF THE ERECTED STEEL SYSTEM SHALL BE MADE AT THE PROJECT SITE.
6. THE QUALITY ASSURANCE INSPECTOR (QAI) SHALL REVIEW MATERIAL TEST REPORTS AND CERTIFICATIONS AS LISTED IN SECTION N3.2 FOR COMPLIANCE WITH THE CONSTRUCTION DOCUMENTS.
7. FOR WORK PERFORMED BY APPROVED FABRICATORS AND ERECTORS:
   A. QA INSPECTIONS, EXCEPT NDT, MAY BE WAIVED WHEN THE WORK IS PERFORMED IN A FABRICATING SHOP OR BY AN ERECTOR APPROVED BY THE AUTHORITY HAVING JURISDICTION (AHJ) TO PERFORM THE WORK WITHOUT QA.
   B. NDT OF WELDS COMPLETED IN AN APPROVED FABRICATOR'S SHOP MAY BE PERFORMED BY THAT FABRICATOR WHEN APPROVED BY THE AHJ. WHEN THE FABRICATOR PERFORMS THE NDT, THE QA AGENCY SHALL REVIEW THE FABRICATOR'S NDT REPORTS.
   C. AT COMPLETION OF FABRICATION, THE APPROVED FABRICATOR SHALL SUBMIT A CERTIFICATE OF COMPLIANCE TO THE AHJ STATING THAT THE MATERIALS SUPPLIED AND WORK PERFORMED BY THE FABRICATOR ARE IN ACCORDANCE WITH THE CONSTRUCTION DOCUMENTS.
   D. AT COMPLETION OF ERECTION, THE APPROVED ERECTOR SHALL SUBMIT A CERTIFICATE OF COMPLIANCE TO THE AHJ STATING THAT THE MATERIALS SUPPLIED AND WORK PERFORMED BY THE ERECTOR ARE IN ACCORDANCE WITH THE CONSTRUCTION DOCUMENTS.

AISC 360–10, CHAPTER N SPECIAL INSPECTION REQUIREMENTS

		FREQUENCY OF INSPECTION	
		PERFORM	OBSERVE
N5.4 – INSPECTION OF WELDING			
AISC 360–10, TABLE N5.4–1 – INSPECTION TASKS PRIOR TO WELDING			
1.	WELDING PROCEDURE SPECIFICATIONS (WPSs) AVAILABLE	X	---
2.	MANUFACTURER CERTIFICATIONS FOR WELDING CONSUMABLES AVAILABLE	X	---
3.	MATERIAL IDENTIFICATION (TYPE/GRADE)	---	X
4.	WELDER IDENTIFICATION SYSTEM (a)	---	X
5.	FIT–UP OF GROOVE WELDS (INCLUDING JOINT GEOMETRY)		
A.	JOINT PREPARATION	---	X
B.	DIMENSIONS (ALIGNMENT, ROOT OPENING, ROOT FACE, BEVEL)	---	X
C.	CLEANLINESS (CONDITION OF STEEL SURFACES)	---	X
D.	TACKING (TACK WELD QUALITY AND LOCATION)	---	X
E.	BACKING TYPE AND FIT (IF APPLICABLE)	---	X
6.	CONFIGURATION AND FINISH OF ACCESS HOLES	---	X
7.	FIT–UP OF FILLET WELDS		
A.	DIMENSIONS (ALIGNMENT, GAPS AT ROOT)	---	X
B.	CLEANLINESS (CONDITION OF STEEL SURFACES)	---	X
C.	TACKING (TACK WELD QUALITY AND LOCATION)	---	X
AISC 360–10, TABLE N5.4–2 – INSPECTIONS DURING WELDING			
1.	USE OF QUALIFIED WELDERS	---	X
2.	CONTROL AND HANDLING OF WELDING CONSUMABLES		
A.	PACKAGING	---	X
B.	EXPOSURE CONTROL	---	X
3.	NO WELDING OVER CRACKED TACK WELDS	---	X
4.	ENVIRONMENTAL CONDITIONS		
A.	WIND SPEED WITHIN LIMITS	---	X
B.	PRECIPITATION AND TEMPERATURE	---	X
5.	WELDING PROCEDURE SPECIFICATION (WPS) FOLLOWED		
A.	SETTINGS ON WELDING EQUIPMENT	---	X
B.	TRAVEL SPEED	---	X
C.	SELECTED WELDING MATERIALS	---	X
D.	SHIELDING GAS TYPE / FLOW RATE	---	X
E.	PREHEAT APPLIED	---	X
F.	INTERPASS TEMPERTURE MAINTAINED (MIN./MAX.)	---	X
G.	PROPER POSITION (F, V, H, OH)	---	X
6.	WELDING TECHNIQUES		
A.	INTERPASS AND FINAL CLEANING	---	X
B.	EACH PASS WITHIN PROFILE LIMITATIONS	---	X
C.	EACH PASS MEETS QUALITY REQUIREMENTS	---	X
AISC 360–10, TABLE N5.4–3 – INSPECTIONS AFTER WELDING			
1.	WELDS CLEANED	---	X
2.	SIZE, LENGTH AND LOCATION OF WELDS	X	---
3.	WELDS MEET VISUAL ACCEPTANCE CRITERIA		
A.	CRACK PROHIBITION	X	---
B.	WELD/BASE–METAL FUSION	X	---
C.	CRATER CROSS SECTION	X	---
D.	WELD PROFILES	X	---
E.	WELD SIZE	X	---
F.	UNDERCUT	X	---
G.	POROSITY	X	---
4.	ARC STRIKES	X	---
5.	k–AREA (b)	X	---
6.	BACKING REMOVED AND WELD TABS REMOVED (IF REQUIRED)	X	---
7.	REPAIR ACTIVITIES	X	---
8.	DOCUMENT ACCEPTANCE OR REJECTION OF WELDED JOINT OR MEMBER	X	---
9.	ULTRASONIC TESTING (UT) ON ALL CJP GROOVE WELDS IN BUTT, T– AND CORNER JOINTS, IN MATERIALS 5/16 INCH THICK OR GREATER (b) (required in Risk Catgory III or IV)	X	---
10.	ULTRASONIC TESTING (UT) ON 10% OF CJP GROOVE WELDS IN BUTT, T– AND CORNER JOINTS, IN MATERIALS 5/16 INCH THICK OR GREATER (b) (required in Risk Catgory II)	---	X
11.	THERMALLY CUT SURFACES OF ACCESS HOLES SHALL BE TESTED USING MAGNETIC PARTICLE TESTING (MT) OR PENETRANT TESTING (PT), WHEN FLANGE THICKNESS EXCEEDS 2 INCHES FOR ROLLED SHAPES, OR WHEN THE WEB THICKNESS EXCEEDS 2 INCHES FOR BUILT–UP SHAPES (b)	X	---

AISC 360–10, CHAPTER N SPECIAL INSPECTION REQUIREMENTS

		FREQUENCY OF INSPECTION	
		PERFORM	OBSERVE
12.	(see AISC 360–10, section N5–5d for additional special inspections for welded joints subject to fatigue)		
(a)	THE FABRICATOR OR ERECTOR, AS APPLICABLE, SHALL MAINTAIN A SYSTEM BY WHICH A WELDER WHO HAS WELDED A JOINT OR MEMBER CAN BE IDENTIFIED. STAMPS, IF USED, SHALL BE THE LOW STRESS TYPE.		
(b)	WHEN WELDING OF DOUBLER PLATES, CONTINUITY PLATES OR STIFFENERS HAS BEEN PERFORMED IN THE k–AREA, VISUALLY INSPECT THE WEB k–AREA FOR CRACKS WITHIN 3 INCHES OF THE WELD.		
	** PERFORM – PERFORM THESE TASKS FOR EACH WELDED JOINT OR MEMBER.		
	** OBSERVE – OBSERVE THESE ITEMS ON A RANDOM BASIS. OPERATIONS NEED NOT BE DELAYED PENDING THESE INSPECTIONS.		
N5.6 – INSPECTION OF HIGH–STRENGTH BOLTS			
AISC 360–10, TABLE N5.6–1 – INSPECTION TASKS PRIOR TO BOLTING			
1.	MANUFACTURER'S CERTIFICATIONS AVAILABLE FOR FASTENER MATERIALS	X (QAI)	X (QCI)
2.	FASTENERS MARKED IN ACCORDANCE WITH ASTM REQUIREMENTS	---	X
3.	PROPER FASTENERS SELECTED FOR THE JOINT DETAIL (GRADE, TYPE, BOLT LENGTH)	---	X
4.	PROPER BOLTING PROCEDURES SELECTED FOR JOINT DETAIL	---	X
5.	CONNECTING ELEMENTS, INCLUDING THE APPROPRIATE FAYING SURFACE CONDITION AND HOLE PREPARATION, IF SPECIFIED, MEET APPLICABLE REQUIREMENTS	---	X
6.	PRE–INSTALLATION VERIFICATION TESTING BY INSTALLATION PERSONNEL OBSERVED AND DOCUMENTED FOR FASTENER ASSEMBLIES AND METHODS USED (a)	X	X
7.	PROPER STORAGE PROVIDED FOR BOLTS, NUTS, WASHERS AND OTHER FASTENER COMPONENTS	---	X
AISC 360–10, TABLE N5.6–2 – INSPECTIONS DURING BOLTING			
1.	FASTENER ASSEMBLIES, OF SUITABLE CONDITION, PLACED IN ALL HOLES AND WASHERS (IF REQUIRED) ARE POSITIONED AS REQUIRED	---	X
2.	JOINT BROUGHT TO THE SNUG–TIGHT CONDITION PRIOR TO THE PRETENSIONING OPERATION	---	X
3.	FASTENER COMPONENT NOT TURNED BY THE WRENCH PREVENTED FROM ROTATING (b)	---	X
4.	FASTENERS ARE PRETENSIONED IN ACCORDANCE WITH THE RCSC SPECIFICATION, PROGRESSING SYSTEMATICALLY FROM THE MOST RIGID POINT TOWARD THE FREE EDGES (b)	---	X
AISC 360–10, TABLE N5.6–3 – INSPECTIONS AFTER BOLTING			
1.	DOCUMENT ACCEPTANCE OR REJECTION OF BOLTED CONNECTIONS	X	---
(a)	NOT APPLICABLE FOR SNUG TIGHT JOINTS.		
(b)	FOR PRETENSIONED JOINTS AND SLIP–CRITICAL JOINTS, WHEN THE INSTALLER IS USING THE TURN–OF–NUT METHOD WITH MATCHMARKING TECHNIQUES, THE DIRECT–TENSION–INDICATOR METHOD, OR THE TWIST–OFF–TYPE TENSION CONTROL BOLT METHOD, THE QCI AND QAI NEED NOT BE PRESENT DURING THE INSTALLATION OF FASTENERS.		
	** PERFORM – PERFORM THESE TASKS FOR EACH BOLTED CONNECTION.		
	** OBSERVE – OBSERVE THESE ITEMS ON A RANDOM BASIS. OPERATIONS NEED NOT BE DELAYED PENDING THESE INSPECTIONS.		
N5.7 – OTHER INSPECTION TASKS			
1.	INSPECT THE STEEL TO VERIFY COMPLIANCE WITH THE DETAILS SHOWN ON THE CONSTRUCTION DOCUMENTS SUCH AS BRACES, STIFFENERS, MEMBER LOCATIONS AND PROPER APPLICATION OF JOINT DETAILS AT EACH CONNECTION	X	---
2.	INSPECT THE PLACEMENT OF ANCHOR RODS AND OTHER EMBEDMENTS SUPPORTING STRUCTURAL STEEL FOR COMPLIANCE WITH THE CONSTRUCTION DOCUMENTS. THE DIAMETER, GRADE, TYPE AND LENGTH OF THE ANCHOR ROD OR EMBEDDED ITEM, AND THE EXTENT OR DEPTH OF EMBEDMENT INTO THE CONCRETE, SHALL BE VERIFIED PRIOR TO PLACEMENT OF CONCRETE	X	---
	** PERFORM – PERFORM THESE TASKS FOR EACH CONNECTION.		
N6 – INSPECTION OF COMPOSITE CONSTRUCTION			
INSPECTIONS OF STEEL ELEMENTS OF COMPOSITE CONSTRUCTION PRIOR TO CONCRETE PLACEMENT (AISC 360–10, TABLE N6.1)			
1.	PLACEMENT AND INSTALLATION OF STEEL DECK	X	---
2.	PLACEMENT AND INSTALLATION OF STEEL HEADED STUD ANCHORS	X	---
3.	DOCUMENT ACCEPTANCE OR REJECTION OF STEEL ELEMENTS	X	---
	** PERFORM – PERFORM THESE TASKS FOR EACH STEEL ELEMENT.		

IBC 2015 REQUIRED SPECIAL INSPECTIONS

		CONTINUOUS	PERIODIC
CONCRETE CONSTRUCTION (IBC TABLE 1705.3)			
1.	INSPECT REINFORCEMENT, INCLUDING PRESTRESSING TENDONS, AND VERIFY PLACEMENT.	---	X
2.	INSPECTION OF REINFORCING BAR WELDING IN ACCORDANCE WITH TABLE 1705.3 ITEM 2.	X	---
3.	INSPECT ANCHORS CAST IN CONCRETE.	---	X
4.	INSPECT ANCHORS POST–INSTALLED IN HARDENED CONCRETE MEMBERS.	X	---
5.	VERIFY USE OF REQUIRED DESIGN MIX.	---	X
6.	PRIOR TO CONCRETE PLACEMENT, FABRICATE SPECIMENS FOR STRENGTH TESTS, PERFORM SLUMP AND AIR CONTENT TESTS, AND DETERMINE THE TEMPERATURE OF THE CONCRETE.	X	---
7.	INSPECT CONCRETE AND SHOTCRETE PLACEMENT FOR PROPER APPLICATION TECHNIQUES.	X	---
8.	VERIFY MAINTENANCE OF SPECIFIED CURING TEMPERATURE AND TECHNIQUES.	---	X
9.	INSPECT PRESTRESSED CONCRETE FOR:		
A.	APPLICATION OF PRESTRESSING FORCES; AND	X	---
B.	GROUTING OF BONDED PRESTRESSING TENDONS.	X	---
10.	INSPECT ERECTION OF PRECAST CONCRETE MEMBERS.	---	X
11.	VERIFY IN–SITU CONCRETE STRENGTH, PRIOR TO STRESSING OF TENDONS IN POST TENSIONED CONCRETE AND PRIOR TO REMOVAL OF SHORES AND FORMS FROM BEAMS AND STRUCTURAL SLABS.	---	X
12.	INSPECT FORMWORK FOR SHAPE, LOCATION AND DIMENSIONS OF THE CONCRETE MEMBER BEING FORMED.	---	X
WOOD CONSTRUCTION – IBC SECTION 1705.5			
1.	SPECIAL INSPECTION OF THE FABRICATION PROCESS OF PREFABRICATED WOOD STRUCTURAL ELEMENTS AND ASSEMBLIES SHALL BE IN ACCORDANCE WITH SECTION 1704.2.5. SPECIAL INSPECTION OF SITE BUILT ASSEMBLIES SHALL BE IN ACCORDANCE WITH SECTION 1705.5		
2.	INSPECTION OF WOOD STRUCTURAL PANEL SHEATHING GRADE AND THICKNESS. (required at wood high load diaphragms designed in accordance with 2306.2.)	---	X
3.	VERIFICATION OF THE NOMINAL SIZE OF FRAMING MEMBERS AT ADJOINING PANEL EDGES. (required at wood high load diaphragms designed in accordance with 2306.2.)	---	X
4.	VERIFICATION OF THE NAIL OR STAPLE DIAMETER AND LENGTH, THE NUMBER OF FASTENER LINES AND THE SPACING BETWEEN FASTENERS IN EACH LINE AND AT EDGE MARGINS. (required at wood high load diaphragms designed in accordance with 2306.2.)	---	X
5.	VERIFICATION THAT THE TEMPORARY INSTALLATION RESTRAINT/BRACING AND THE PERMANENT INDIVIDUAL TRUSS MEMBER RESTRAINT/BRACING ARE INSTALLED IN ACCORDANCE WITH THE APPROVED TRUSS SUBMITTAL PACKAGE AT METAL–PLATE–CONNECTED WOOD TRUSSES WITH A CLEAR SPAN OF 60'–0" OR GREATER.	---	X
SOILS (IBC TABLE 1705.6)			
1.	VERIFY MATERIALS BELOW SHALLOW FOUNDATIONS ARE ADEQUATE TO ACHIEVE THE DESIGN BEARING CAPACITY.	---	X
2.	VERIFY EXCAVATIONS ARE EXTENDED TO PROPER DEPTH AND HAVE REACHED PROPER MATERIAL.	---	X
3.	PERFORM CLASSIFICATION AND TESTING OF COMPACTED FILL MATERIALS.	---	X
4.	VERIFY USE OF PROPER MATERIALS, DENSITIES AND LIFT THICKNESSES DURING PLACEMENT AND COMPACTION OF COMPACTED FILL.	X	---
5.	PRIOR TO PLACEMENT OF COMPACTED FILL, OBSERVE SUBGRADE AND VERIFY THAT SITE HAS BEEN PREPARED PROPERLY.	---	X

ACI 530/ACI 530.1 SPECIAL INSPECTION REQUIREMENTS

		CONTINUOUS	PERIODIC
MASONRY CONSTRUCTION – LEVEL A QUALITY ASSURANCE (ACI 530 TABLE 3.1.1)			
1.	PRIOR TO CONSTRUCTION, VERIFY CERTIFICATES OF COMPLIANCE USED IN MASONRY CONSTRUCTION.		
MASONRY CONSTRUCTION – LEVEL B QUALITY ASSURANCE (ACI 530 TABLE 3.1.2 – RISK CATEGORY I, II OR III)			
1.	VERIFICATION OF SLUMP FLOW AND VISUAL STABILITY INDEX (VSI) AS DELIVERED TO THE PROJECT SITE IN ACCORDANCE WITH SPECIFICATION ARTICLE 1.5B.1.b.3 FOR SELF–CONSOLIDATING GROUT.		
2.	VERIFICATION OF $f'm$ AND $f'aac$ IN ACCORDANCE WITH SPECIFICATION ARTICLE 1.4B PRIOR TO CONSTRUCTION, EXCEPT WHERE SPECIFICALLY EXEMPTED BY THIS CODE.		
3.	VERIFY COMPLIANCE WITH THE APPROVED SUBMITTALS.	---	X
4.	AS MASONRY CONSTRUCTION BEGINS, VERIFY THAT THE FOLLOWING ARE IN COMPLIANCE:		
A.	PROPORTIONS OF SITE–PREPARED MORTAR.	---	X
B.	CONSTRUCTION OF MORTAR JOINTS.	---	X
C.	GRADE AND SIZE OF PRESTRESSING TENDONS AND ANCHORAGES	---	X
D.	LOCATION OF REINFORCEMENT, CONNECTORS, AND PRESTRESSING TENDONS AND ANCHORAGES.	---	X
E.	PRESTRESSING TECHNIQUE.	---	X
F.	PROPERTIES OF THIN–BED MORTAR FOR AAC MASONRY.		
	1. REQUIRED FOR THE FIRST 5000 SQUARE FEET OF AAC MASONRY.	X	---
	2. REQUIRED AFTER THE FIRST 5000 SQUARE FEET OF AAC MASONRY.	---	X
5.	PRIOR TO GROUTING, VERIFY THAT THE FOLLOWING ARE IN COMPLIANCE:		
A.	GROUT SPACE	---	X
B.	GRADE, TYPE, AND SIZE OF REINFORCEMENT AND ANCHOR BOLTS, AND PRESTRESSING TENDONS AND ANCHORAGE.	---	X
C.	PLACEMENT OF REINFORCEMENT, CONNECTORS, AND PRESTRESSING TENDONS AND ANCHORAGES.	---	X
D.	PROPORTIONS OF SITE–PREPARED GROUT AND PRESTRESSING GROUT FOR BONDED TENDONS.	---	X
E.	CONSTRUCTION OF MORTAR JOINTS.	---	X
6.	VERIFY DURING CONSTRUCTION:		
A.	SIZE AND LOCATION OF STRUCTURAL ELEMENTS.	---	X
B.	TYPE, SIZE, AND LOCATION OF ANCHORS, INCLUDING OTHER DETAILS OF ANCHORAGE OF MASONRY TO STRUCTURAL MEMBERS, FRAMES, OR OTHER CONSTRUCTION.	---	X
C.	WELDING OF REINFORCEMENT.	X	---
D.	PREPARATION, CONSTRUCTION, AND PROTECTION OF MASONRY DURING COLD WEATHER (TEMPERATURE BELOW 40 DEG. F) OR HOT WEATHER (TEMPERATURE ABOVE 90 DEG. F.)	---	X
E.	APPLICATION AND MEASUREMENT OF PRESTRESSING FORCE.	X	---
F.	PLACEMENT OF GROUT AND PRESTRESSING GROUT FOR BONDED TENDONS IS IN COMPLIANCE.	X	---
G.	PLACEMENT OF AAC MASONRY UNITS AND CONSTRUCTION OF THIN–BED MORTAR JOINTS.		
	1. REQUIRED FOR THE FIRST 5000 SQUARE FEET OF AAC MASONRY.	X	---
	2. REQUIRED AFTER THE FIRST 5000 SQUARE FEET OF AAC MASONRY.	---	X
7.	OBSERVE PREPARATION OF GROUT SPECIMENS, MORTAR SPECIMENS, AND/OR PRISMS.	---	X

wallace design collective

wallace design collective, pc
structural · civil · landscape · survey
410 north walnut avenue, suite 200
oklahoma city, oklahoma 73104
405.236.5858 · 800.364.5858

BID SET

PDG
PLANNING DESIGN GROUP
LANDSCAPE ARCHITECTURE • RECREATIONAL DESIGN • LAND PLANNING
5314 S. YALE AVE., SUITE 710, TULSA, OK 74135
918.628.1255 918.628.1256 FAX
WWW.PLANNINGDESIGNGROUP.COM

gsb inc
3555 NW 58TH Street
Suite 700-W
Oklahoma City, OK 73112
T: 405.848.9549
F: 405.848.9783
www.gsb-inc.com

Copyright © 2022 GSB, Inc

LICENSED STRUCTURAL ENGINEER
DAVID LEE ZUK
21423
OKLAHOMA
06-03-2022
OKLAHOMA CERTIFICATE OF AUTHORIZATION #1460
EXPIRATION DATE: 06/30/2023

PROJECT INFORMATION

PROJECT ADDRESS:

1001 E. ROBINSON ST.,
NORMAN, OKLAHOMA 73071

PROJECT NO.	171511A
DATE	06/03/22
DRAWN BY	CHECKED BY
JL	IG/DZ

GRIFFIN SOCCER COMPLEX
PHASE 6
NORMAN, OKLAHOMA

ISSUE/ REVISIONS

NO.	DATE	DESCRIPTION

OWNER:
THE CITY OF NORMAN PARKS & RECREATION
201-C WEST GRAY
NORMAN, OK 73069
(405) 366-5472

SPECIAL INSPECTIONS

S0.10

ROOF FRAMING NOTES:

1. G.C. TO VERIFY ALL EXTERIOR WALL AND OPENING DIMENSIONS AND LOCATIONS WITH ARCH DRAWINGS.
2. RE: 4/S3.00C FOR SMALL OPENINGS IN PLYWOOD DECK.
3. RE: 6/S3.00C FOR TRUSS LOADING SCHEDULE AND BUILDING LOADS DIAGRAM.
4. RE: 12/S2.00C FOR CMU LINTEL AND JAMB SCHEDULE.
5. RE: 11/S2.00C FOR CMU WALL REINFORCING DIAGRAM.

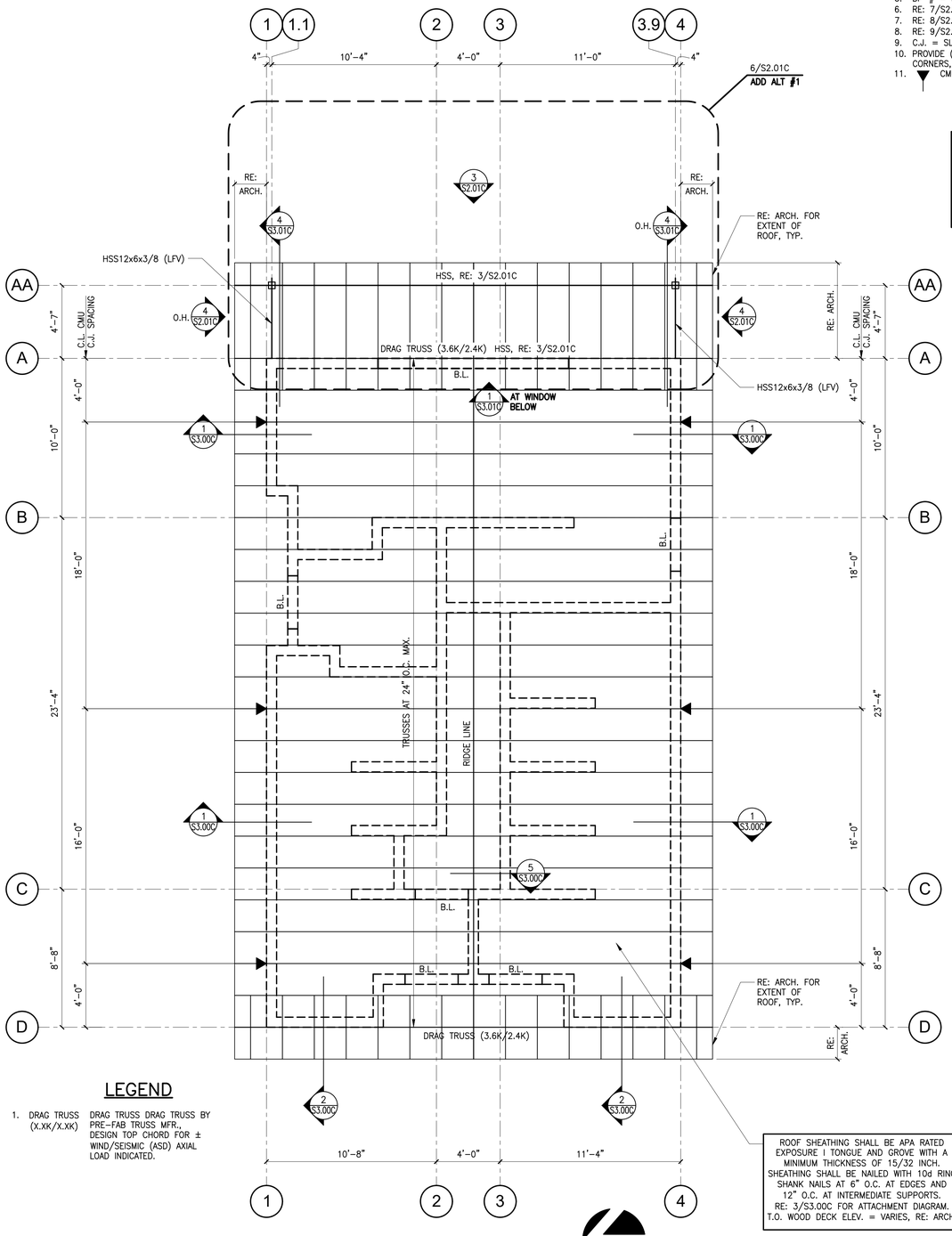

ROOF SHEATHING SHALL BE APA RATED EXPOSURE I TONGUE AND GROVE WITH A MINIMUM THICKNESS OF 15/32 INCH. SHEATHING SHALL BE NAILED WITH 10d RING SHANK NAILS AT 6" O.C. AT EDGES AND 12" O.C. AT INTERMEDIATE SUPPORTS. RE: 3/S3.00C FOR ATTACHMENT DIAGRAM. T.O. WOOD DECK ELEV. = VARIES, RE: ARCH.

LEGEND

1. DRAG TRUSS (X.XK/X.XK) — DRAG TRUSS DRAG TRUSS BY PRE-FAB TRUSS MFR., DESIGN TOP CHORD FOR ± WIND/SEISMIC (ASD) AXIAL LOAD INDICATED.

NORTH

2 S1.00C ROOF FRAMING PLAN 1/4" = 1'-0"

FOUNDATION NOTES:

1. G.C. TO VERIFY ALL EXTERIOR WALL AND OPENING DIMENSIONS AND LOCATIONS.
2. REFER TO CIVIL DRAWINGS FOR ALL EXTERIOR CONCRETE AND PAVING.
3. G.C. TO DETERMINE ALL SPECIFIC CONCRETE FINISHING REQUIREMENTS.
4. RE: 10/S2.00C FOR CONCRETE REINFORCING LAP SCHEDULE.
5. BP-# = BASE PLATE, RE: 1/S2.01C.
6. RE: 7/S2.00C FOR PIPE UNDER FOOTING.
7. RE: 8/S2.00C FOR RECESSED SLAB DETAIL.
8. RE: 9/S2.00C FOR TYPICAL SLAB AT FLOOR DRAIN.
9. C.J. = SLAB CONTROL JOINT, RE: 5/S2.00C.
10. PROVIDE (2)-#4x3'-0" BARS MIDSLAB AT ALL RE-ENTRANT CORNERS, TYP.
11. ▼ CMU CONTROL JOINT.

4" CONCRETE SLAB REINF. WITH #3 AT 28" O.C. EA. WAY PLACED AT MID SLAB OVER 15 MIL. (MIN.) VAPOR RETARDER OVER 4" (MIN.) WELL GRADED GRANULAR MATERIAL OVER COMPACTED STRUCTURAL FILL MATERIAL (RE: GEOTECHNICAL REPORT) FINISH FLOOR ELEV. = 100'-0" U.N.O.

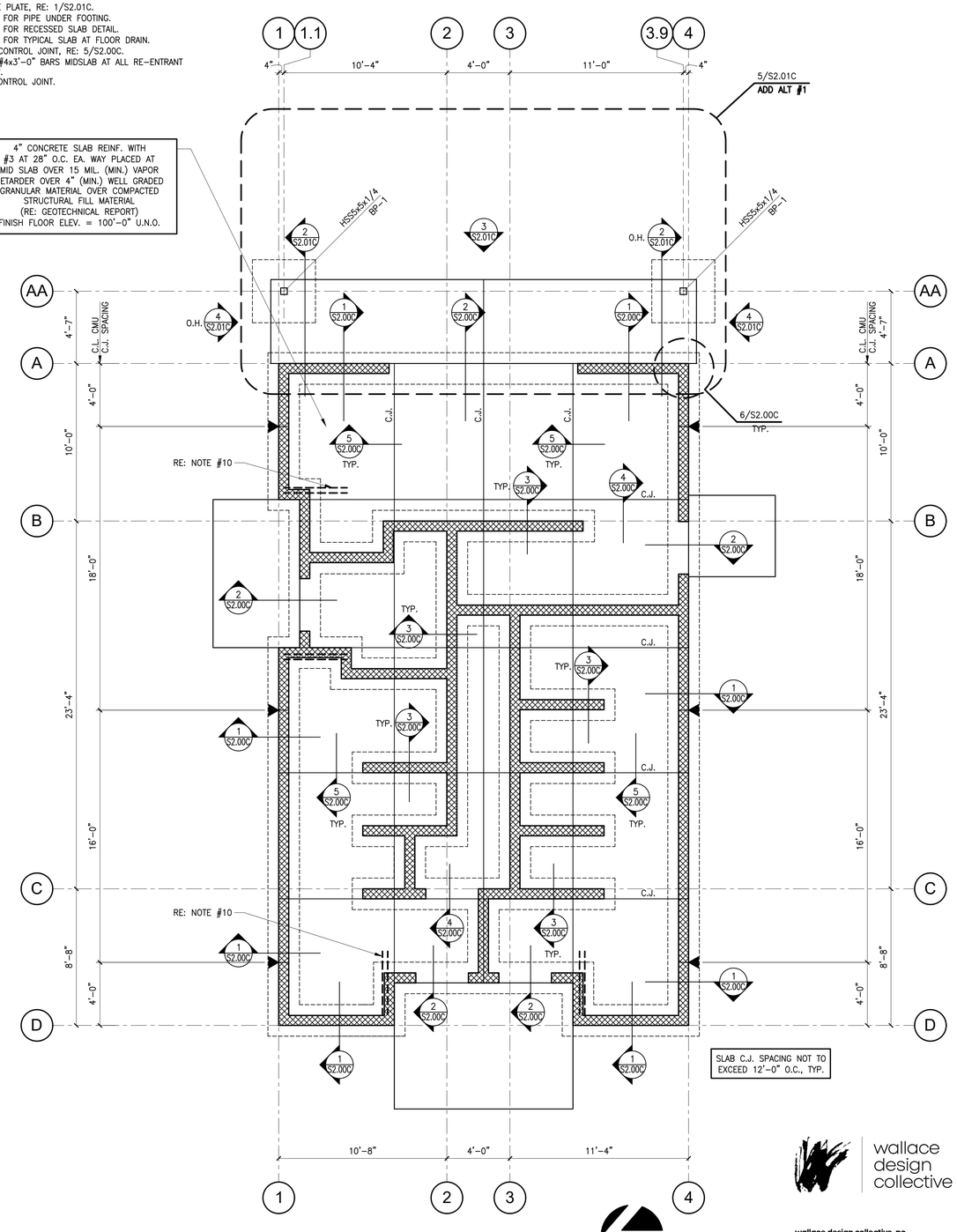

NORTH

1 S1.00C FOUNDATION PLAN 1/4" = 1'-0"

wallace design collective

wallace design collective, pc
structural · civil · landscape · survey
410 north walnut avenue, suite 200
oklahoma city, oklahoma 73104
405.236.5858 · 800.364.5858

BID SET

PDG
PLANNING DESIGN GROUP
LANDSCAPE ARCHITECTURE ● RECREATIONAL DESIGN ● LAND PLANNING
5314 S. YALE AVE., SUITE 710, TULSA, OK 74135
918.628.1255 918.628.1256 FAX
WWW.PLANNINGDESIGNGROUP.COM

gsb inc.
3555 NW 58TH Street
Suite 700-W
Oklahoma City, OK 73112
T: 405.848.9549
F: 405.848.9783
www.gsb-inc.com

Copyright © 2022 GSB, Inc

LICENSED STRUCTURAL ENGINEER DAVID LEE ZUK 21423 OKLAHOMA
06-03-2022
OKLAHOMA CERTIFICATE OF AUTHORIZATION #1460
EXPIRATION DATE: 06/30/2023

PROJECT INFORMATION

PROJECT ADDRESS:

1001 E. ROBINSON ST.,
NORMAN, OKLAHOMA 73071

PROJECT NO.	171511A
DATE	06/03/22
DRAWN BY	CHECKED BY
JL	IG/DZ

GRIFFIN SOCCER COMPLEX PHASE 6 NORMAN, OKLAHOMA

ISSUE/ REVISIONS

NO.	DATE	DESCRIPTION

OWNER:
THE CITY OF NORMAN PARKS & RECREATION
201-C WEST GRAY
NORMAN, OK 73069
(405) 366-5472

FOUNDATION AND FRAMING PLANS

S1.00C

ROOF FRAMING NOTES:

1. G.C. TO VERIFY ALL EXTERIOR WALL AND OPENING DIMENSIONS AND LOCATIONS WITH ARCH DRAWINGS.
2. RE: 4/S3.00R FOR SMALL OPENINGS IN PLYWOOD DECK.
3. RE: 6/S3.00R FOR TRUSS LOADING SCHEDULE AND BUILDING LOADS DIAGRAM.
4. RE: 12/S2.00R FOR CMU LINTEL AND JAMB SCHEDULE.
5. RE: 11/S2.00R FOR CMU WALL REINFORCING DIAGRAM.

LEGEND

1. DRAG TRUSS (X.XK/X.XK) DRAG TRUSS DRAG TRUSS BY PRE-FAB TRUSS MFR., DESIGN TOP CHORD FOR ± WIND/SEISMIC (ASD) AXIAL LOAD INDICATED.

FOUNDATION NOTES:

1. G.C. TO VERIFY ALL EXTERIOR WALL AND OPENING DIMENSIONS AND LOCATIONS.
2. REFER TO CIVIL DRAWINGS FOR ALL EXTERIOR CONCRETE AND PAVING.
3. G.C. TO DETERMINE ALL SPECIFIC CONCRETE FINISHING REQUIREMENTS.
4. RE: 10/S2.00R FOR CONCRETE REINFORCING LAP SCHEDULE.
5. RE: 7/S2.00R FOR PIPE UNDER FOOTING.
6. RE: 8/S2.00R FOR RECESSED SLAB DETAIL.
7. RE: 9/S2.00R FOR TYPICAL SLAB AT FLOOR DRAIN.
8. C.J. = SLAB CONTROL JOINT, RE: 5/S2.00R.
9. ▼ CMU CONTROL JOINT.

ROOF SHEATHING SHALL BE APA RATED EXPOSURE I TONGUE AND GROVE WITH A MINIMUM THICKNESS OF 15/32 INCH. SHEATHING SHALL BE NAILED WITH 10d RING SHANK NAILS AT 6" O.C. AT EDGES AND 12" O.C. AT INTERMEDIATE SUPPORTS. RE: 3/S3.00R FOR ATTACHMENT DIAGRAM. T.O. WOOD DECK ELEV. = VARIES, RE: ARCH.

4" CONCRETE SLAB REINF. WITH #3 AT 28" O.C. EA. WAY PLACED AT MID SLAB OVER 15 MIL. (MIN.) VAPOR RETARDER OVER 4" (MIN.) WELL GRADED GRANULAR MATERIAL OVER COMPACTED STRUCTURAL FILL MATERIAL. (RE: GEOTECHNICAL REPORT) FINISH FLOOR ELEV. = 100'-0" U.N.O.

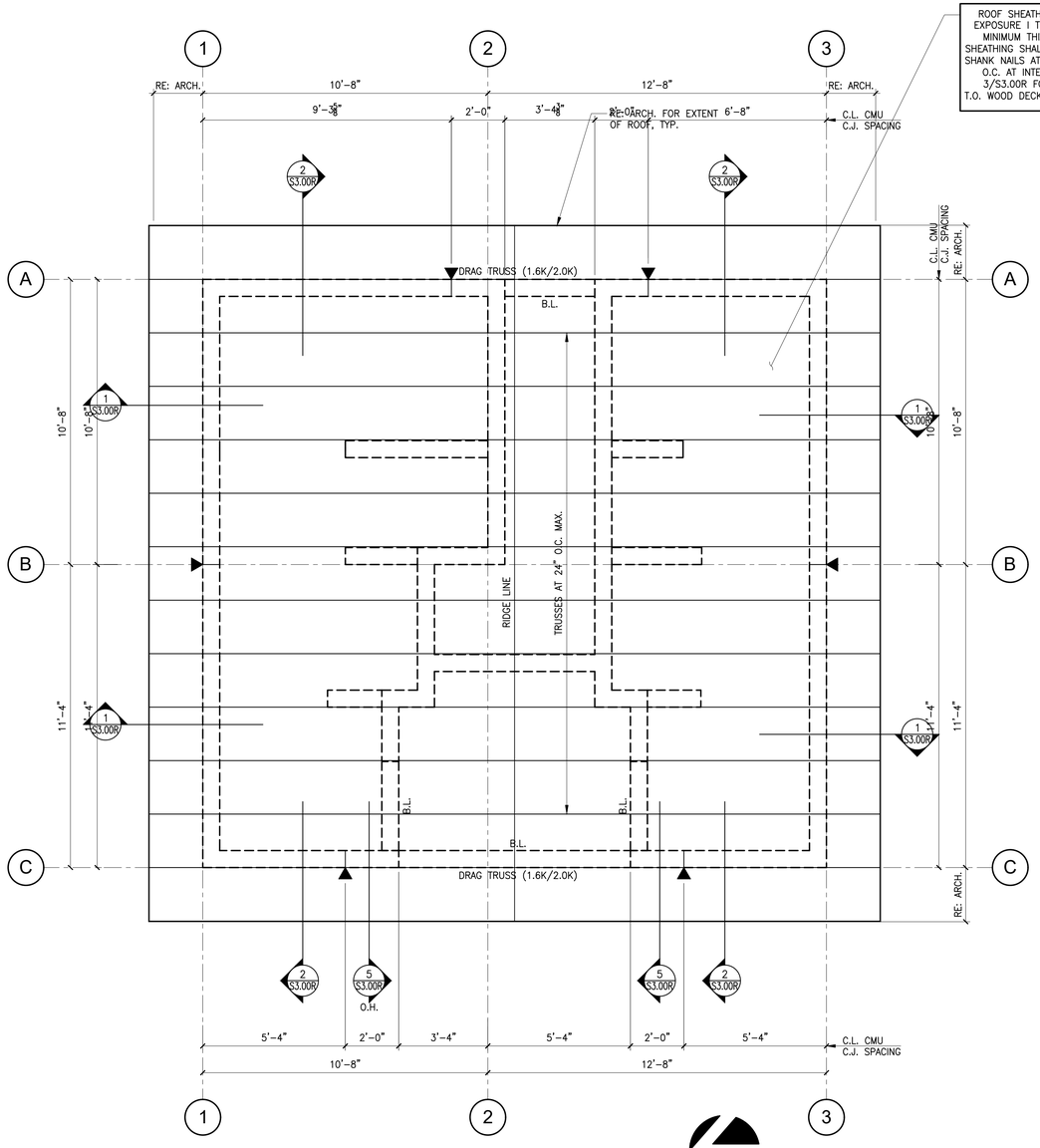

2/S1.00R ROOF FRAMING PLAN
3/8" = 1'-0"

NORTH

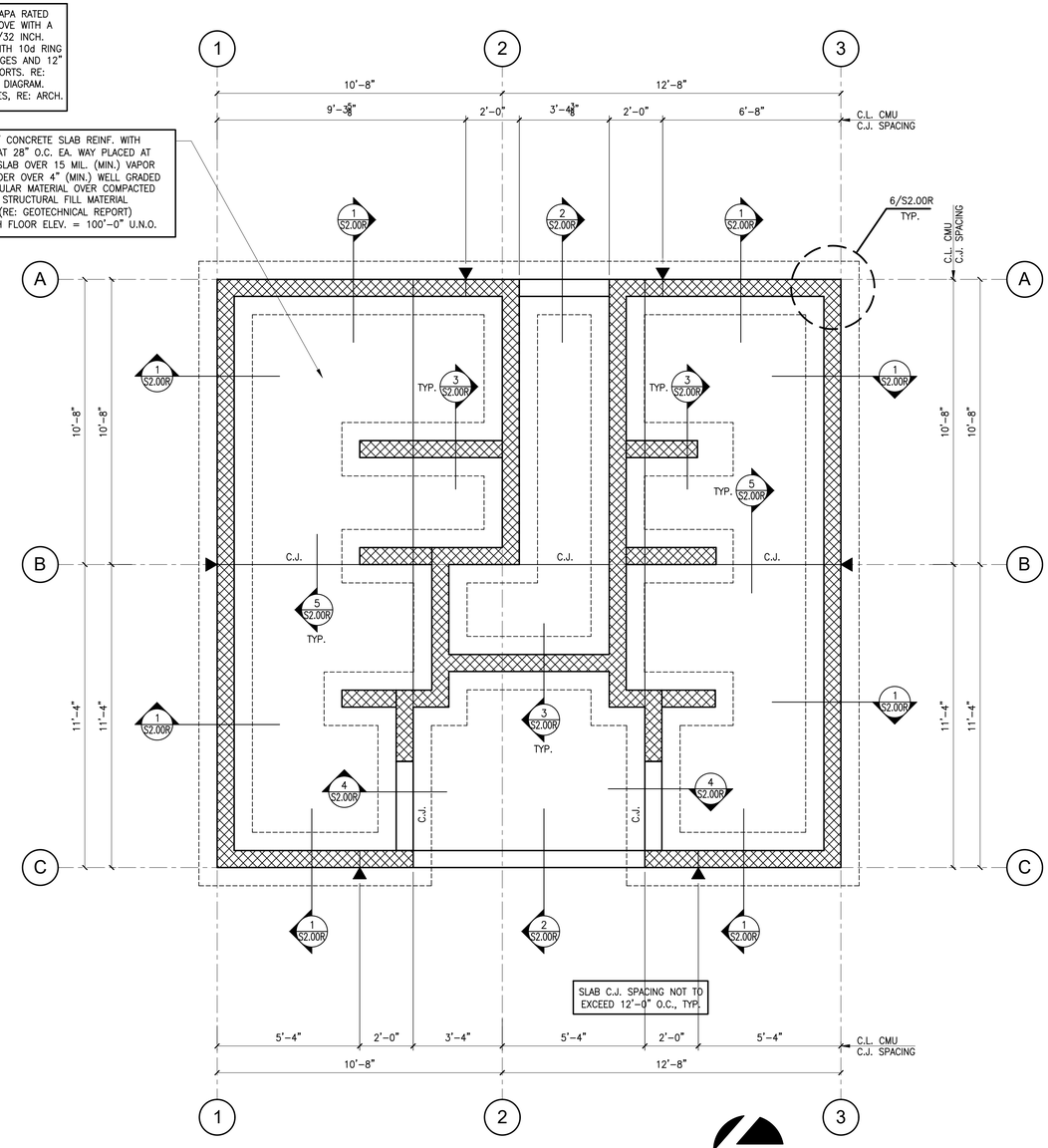

1/S1.00R FOUNDATION PLAN
3/8" = 1'-0"

NORTH

wallace design collective

wallace design collective, pc
structural · civil · landscape · survey
410 north walnut avenue, suite 200
oklahoma city, oklahoma 73104
405.236.5858 · 800.364.5858

BID SET

PDG
PLANNING DESIGN GROUP
LANDSCAPE ARCHITECTURE • RECREATIONAL DESIGN • LAND PLANNING
5314 S. YALE AVE., SUITE 710, TULSA, OK 74135
918.628.1255 918.628.1256 FAX
WWW.PLANNINGDESIGNGROUP.COM

gsb inc
3555 NW 58TH Street
Suite 700-W
Oklahoma City, OK 73112
T: 405.848.9549
F: 405.848.9783
www.gsb-inc.com

Copyright © 2022 GSB, Inc

LICENSED STRUCTURAL ENGINEER
DAVID LEE ZUK
21423
OKLAHOMA
06-03-2022
OKLAHOMA CERTIFICATE OF AUTHORIZATION #1460
EXPIRATION DATE: 06/30/2023

PROJECT INFORMATION

PROJECT ADDRESS:

1001 E. ROBINSON ST.,
NORMAN, OKLAHOMA 73071

PROJECT NO.	171511A
DATE	06/03/22
DRAWN BY	CHECKED BY
JL	IG/DZ

GRIFFIN SOCCER COMPLEX PHASE 6 NORMAN, OKLAHOMA

ISSUE/ REVISIONS

NO.	DATE	DESCRIPTION

OWNER:
THE CITY OF NORMAN PARKS & RECREATION
201-C WEST GRAY
NORMAN, OK 73069
(405) 366-5472

FOUNDATION AND FRAMING PLANS

S1.00R

NOTES:
1. REFER CMU REINFORCING DIAGRAM 11/S2.00C FOR SPLICES IN VERTICAL REINFORCING.
2. CONTINUE HORIZONTAL REINFORCING INTO JAMB AND PROVIDE STANDARD ACI HOOK INTO END CELL.
3. EXTEND GROUTED LINTEL A MINIMUM OF 2'-0" BEYOND FACE OF OPENING EACH SIDE FOR STRAIGHT LINTEL REINFORCEMENT AND 1'-4" FOR HOOKED LINTEL REINFORCEMENT WITH STANDARD ACI HOOK.
4. USE LINTEL BLOCKS ONLY FOR BOTTOM COURSE OF LINTEL BEAMS.
5. CONTINUE VERTICAL REINFORCING INTO LINTEL BEAM WITH STANDARD ACI HOOK.
6. PROVIDE MATCHING DOWELS AT ALL VERTICAL REINFORCING LOCATIONS, U.N.O.
7. ALL VERTICAL BARS AT JAMBS SHALL BE FULL HEIGHT.

CMU LINTEL SCHEDULE

WIDTH (W)	CLEAR SPAN	DEPTH (D)	BOTTOM REINF.	TOP REINF.	JAMB WIDTH
8"	UP TO 3'-4"	8"	(1)-#5	------	8"
8"	UP TO 12'-0"	24"	(2)-#6	(2)-#6	24"

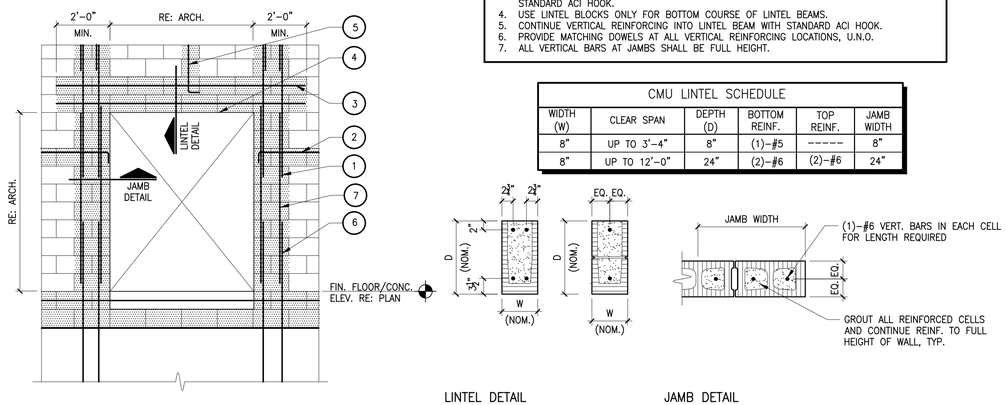

12/S2.00C CMU WALL OPENING DETAIL
N.T.S.

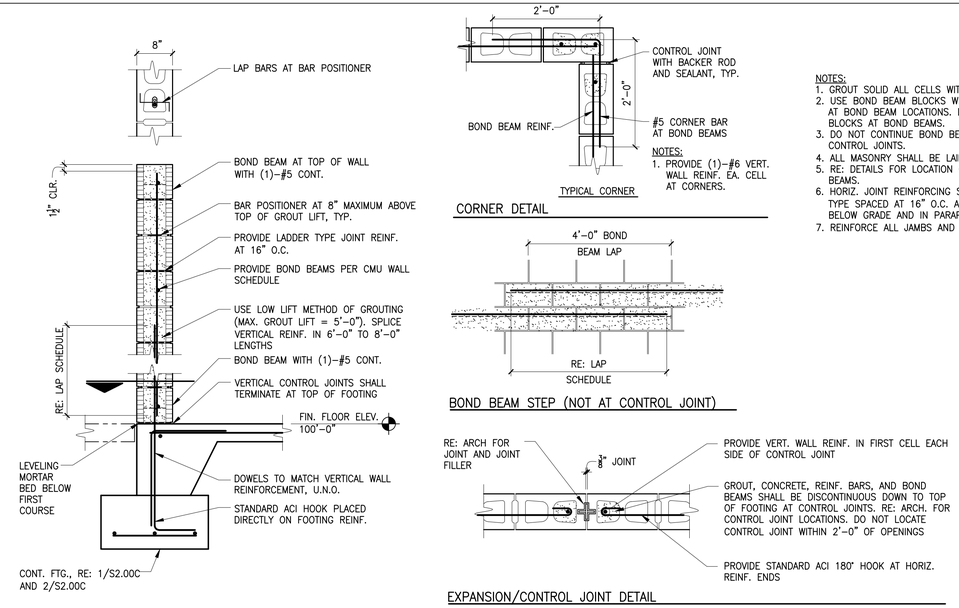

NOTES:
1. GROUT SOLID ALL CELLS WITH REINFORCING.
2. USE BOND BEAM BLOCKS WITH OPEN BOTTOMS ONLY AT BOND BEAM LOCATIONS. DO NOT USE TROUGH-TYPE BLOCKS AT BOND BEAMS.
3. DO NOT CONTINUE BOND BEAM REINFORCING THROUGH CONTROL JOINTS.
4. ALL MASONRY SHALL BE LAID IN RUNNING (COMMON) BOND.
5. RE: DETAILS FOR LOCATION OF ADDITIONAL BOND BEAMS.
6. HORIZ. JOINT REINFORCING SHALL BE GALV. LADDER TYPE SPACED AT 16" O.C. ABOVE GRADE AND 8" O.C. BELOW GRADE AND IN PARAPETS.
7. REINFORCE ALL JAMBS AND LINTELS PER 12/S2.00C.

11/S2.00C CMU WALL REINFORCING DIAGRAM
N.T.S.

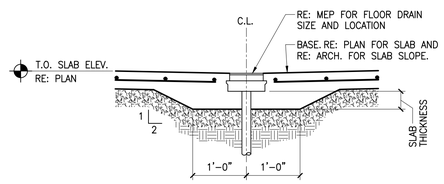

9/S2.00C TYPICAL SLAB AT FLOOR DRAIN
3/4" = 1'-0"

CONCRETE REINF. LAP SCHEDULE (INCHES)

BAR SIZE	CONCRETE f'c = 3,000 PSI TOP	CONCRETE f'c = 3,000 PSI OTHER	CONCRETE f'c = 4,000 PSI TOP	CONCRETE f'c = 4,000 PSI OTHER	CMU
#3	22	17	19	15	24
#4	29	22	25	19	32
#5	36	28	31	24	40
#6	43	33	37	29	48
#7	63	48	54	42	56
#8	72	55	62	48	64
#9	81	62	70	54	----

10/S2.00C CONCRETE REINF. LAP SCHEDULE
N.T.S.

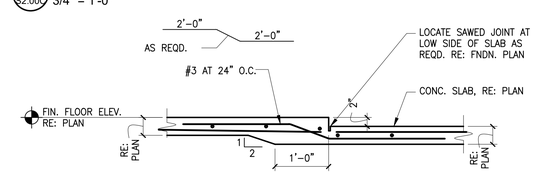

8/S2.00C RECESSED SLAB DETAIL
3/4" = 1'-0"

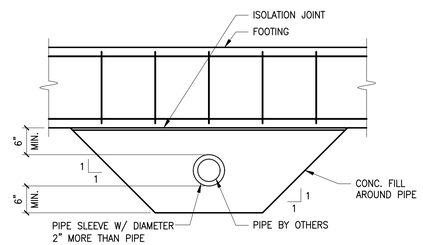

7/S2.00C PIPE UNDER FOOTING
3/4" = 1'-0"

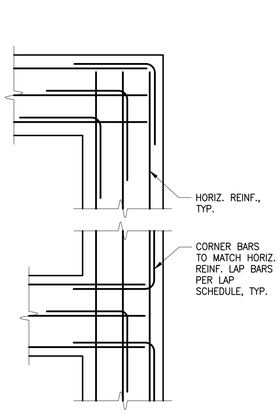

6/S2.00C CORNER BAR DETAIL
N.T.S.

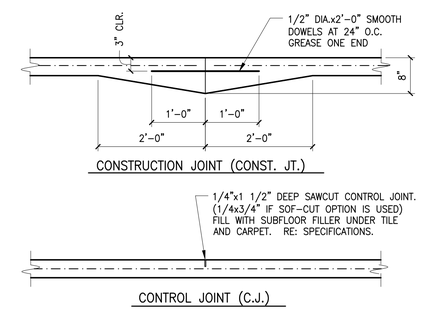

5/S2.00C SLAB CONTROL JOINTS
3/4" = 1'-0"

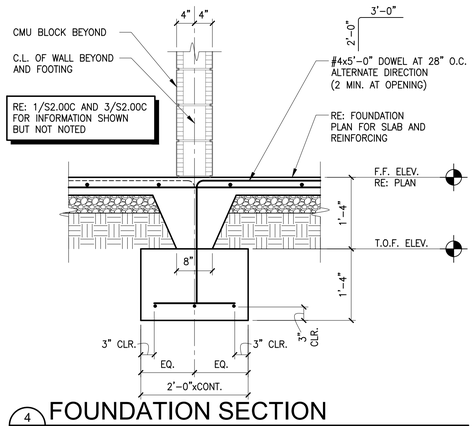

4/S2.00C FOUNDATION SECTION
3/4" = 1'-0"

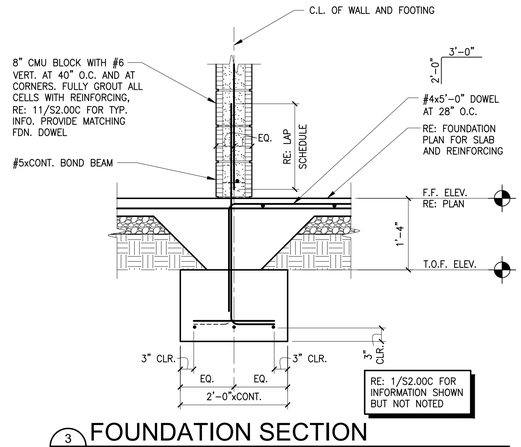

3/S2.00C FOUNDATION SECTION
3/4" = 1'-0"

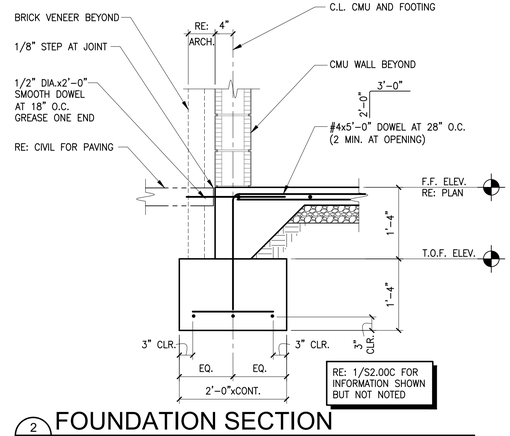

2/S2.00C FOUNDATION SECTION
3/4" = 1'-0"

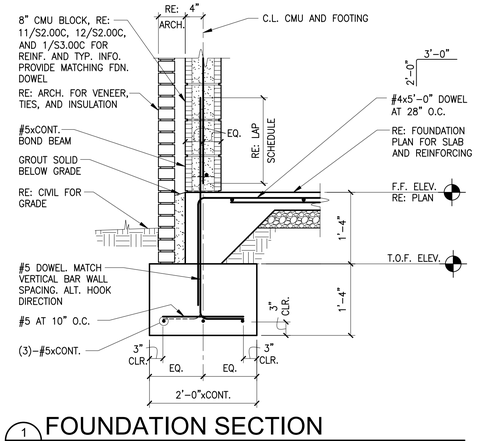

1/S2.00C FOUNDATION SECTION
3/4" = 1'-0"

BID SET

wallace design collective

wallace design collective, pc
structural · civil · landscape · survey
410 north walnut avenue, suite 200
oklahoma city, oklahoma 73104
405.236.5858 · 800.364.5858

PDG
PLANNING DESIGN GROUP
LANDSCAPE ARCHITECTURE • RECREATIONAL DESIGN • LAND PLANNING
5314 S. YALE AVE., SUITE 710, TULSA, OK 74135
918.628.1255 918.628.1256 FAX
WWW.PLANNINGDESIGNGROUP.COM

gsb inc. Architects Planners
3555 NW 58TH Street
Suite 700-W
Oklahoma City, OK 73112
T: 405.848.9549
F: 405.848.9783
www.gsb-inc.com

Copyright © 2022 GSB, Inc

LICENSED STRUCTURAL ENGINEER DAVID LEE ZUK 21423 OKLAHOMA
06-03-2022
OKLAHOMA CERTIFICATE OF AUTHORIZATION #1460
EXPIRATION DATE: 06/30/2023

PROJECT INFORMATION

PROJECT ADDRESS:
1001 E. ROBINSON ST.,
NORMAN, OKLAHOMA 73071

PROJECT NO.	171511A
DATE	06/03/22
DRAWN BY	CHECKED BY
JL	IG/DZ

GRIFFIN SOCCER COMPLEX
PHASE 6
NORMAN, OKLAHOMA

ISSUE/ REVISIONS

NO.	DATE	DESCRIPTION

OWNER:
THE CITY OF NORMAN PARKS & RECREATION
201-C WEST GRAY
NORMAN, OK 73069
(405) 366-5472

FOUNDATION DETAILS

S2.00C

NOTES:
1. REFER CMU REINFORCING DIAGRAM 11/S2.00R FOR SPLICES IN VERTICAL REINFORCING.
2. CONTINUE HORIZONTAL REINFORCING INTO JAMB AND PROVIDE STANDARD ACI HOOK INTO END CELL.
3. EXTEND GROUTED LINTEL A MINIMUM OF 2'–0" BEYOND FACE OF OPENING EACH SIDE FOR STRAIGHT LINTEL REINFORCEMENT AND 1'–4" FOR HOOKED LINTEL REINFORCEMENT WITH STANDARD ACI HOOK.
4. USE LINTEL BLOCKS ONLY FOR BOTTOM COURSE OF LINTEL BEAMS.
5. CONTINUE VERTICAL REINFORCING INTO LINTEL BEAM WITH STANDARD ACI HOOK.
6. PROVIDE MATCHING DOWELS AT ALL VERTICAL REINFORCING LOCATIONS, U.N.O.
7. ALL VERTICAL BARS AT JAMBS SHALL BE FULL HEIGHT.

CMU LINTEL SCHEDULE

WIDTH (W)	CLEAR SPAN	DEPTH (D)	BOTTOM REINF.	TOP REINF.	JAMB WIDTH
8"	UP TO 3'–4"	8"	(1)–#5	-----	8"
8"	UP TO 8'–8"	16"	(2)–#5	(2)–#5	16"

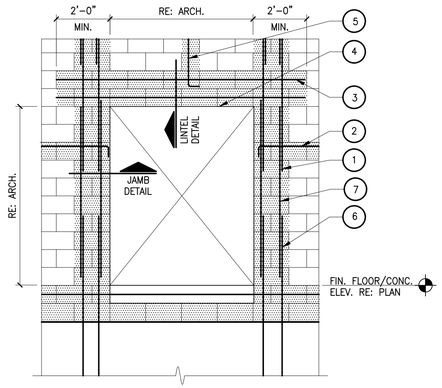

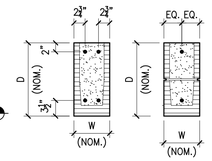

LINTEL DETAIL

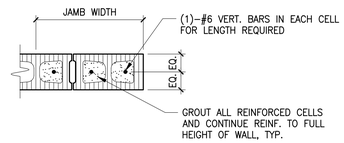

JAMB DETAIL

12 / S2.00R CMU WALL OPENING DETAIL
N.T.S.

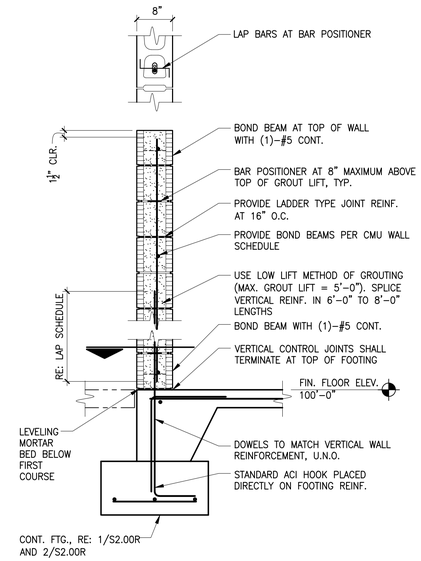

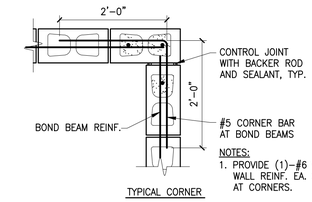

NOTES:
1. PROVIDE (1)–#6 VERT. WALL REINF. EA. CELL AT CORNERS.

CORNER DETAIL

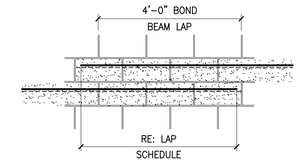

BOND BEAM STEP (NOT AT CONTROL JOINT)

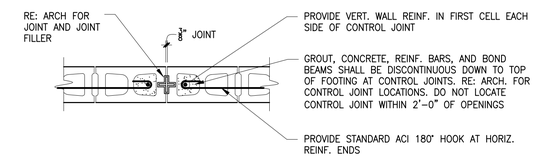

EXPANSION/CONTROL JOINT DETAIL

NOTES:
1. GROUT SOLID ALL CELLS WITH REINFORCING.
2. USE BOND BEAM BLOCKS WITH OPEN BOTTOMS ONLY AT BOND BEAM LOCATIONS. DO NOT USE TROUGH–TYPE BLOCKS AT BOND BEAMS.
3. DO NOT CONTINUE BOND BEAM REINFORCING THROUGH CONTROL JOINTS.
4. ALL MASONRY SHALL BE LAID IN RUNNING (COMMON) BOND.
5. RE: DETAILS FOR LOCATION OF ADDITIONAL BOND BEAMS.
6. HORIZ. JOINT REINFORCING SHALL BE GALV. LADDER TYPE SPACED AT 16" O.C. ABOVE GRADE AND 8" O.C. BELOW GRADE AND IN PARAPETS.
7. REINFORCE ALL JAMBS AND LINTELS PER 12/S2.00R.

11 / S2.00R CMU WALL REINFORCING DIAGRAM
N.T.S.

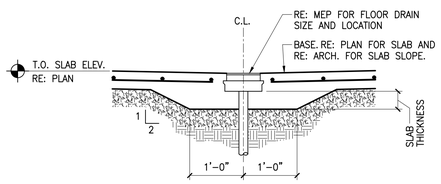

9 / S2.00R TYPICAL SLAB AT FLOOR DRAIN
3/4" = 1'-0"

CONCRETE REINF. LAP SCHEDULE (INCHES)

BAR SIZE	CONCRETE f'c = 3,000 PSI TOP	CONCRETE f'c = 3,000 PSI OTHER	CONCRETE f'c = 4,000 PSI TOP	CONCRETE f'c = 4,000 PSI OTHER	CMU
#3	22	17	19	15	24
#4	29	22	25	19	32
#5	36	28	31	24	40
#6	43	33	37	29	48
#7	63	48	54	42	56
#8	72	55	62	48	64
#9	81	62	70	54	----

10 / S2.00R CONCRETE REINF. LAP SCHEDULE
N.T.S.

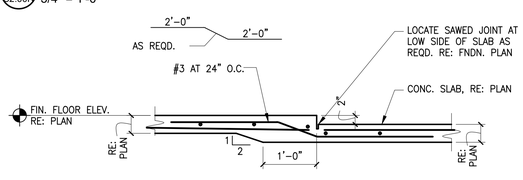

8 / S2.00R RECESSED SLAB DETAIL
3/4" = 1'-0"

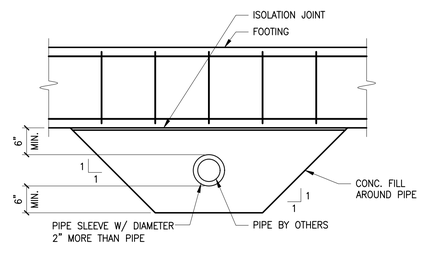

7 / S2.00R PIPE UNDER FOOTING
3/4" = 1'-0"

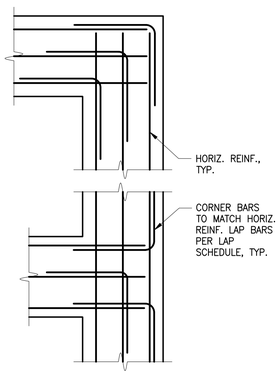

6 / S2.00R CORNER BAR DETAIL
N.T.S.

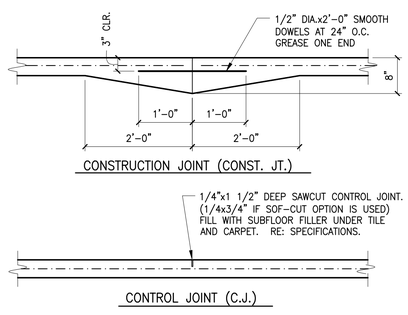

5 / S2.00R SLAB CONTROL JOINTS
3/4" = 1'-0"

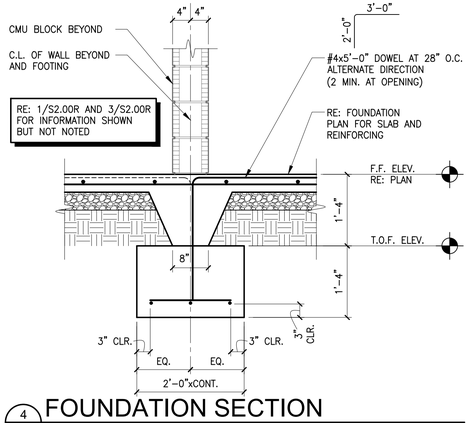

4 / S2.00R FOUNDATION SECTION
3/4" = 1'-0"

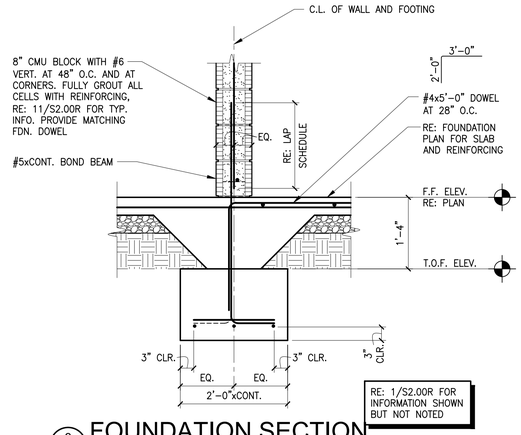

3 / S2.00R FOUNDATION SECTION
3/4" = 1'-0"

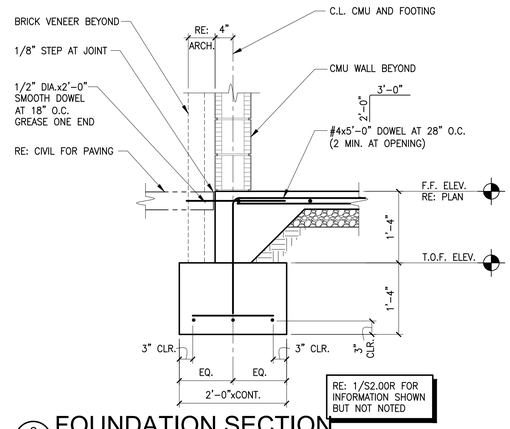

2 / S2.00R FOUNDATION SECTION
3/4" = 1'-0"

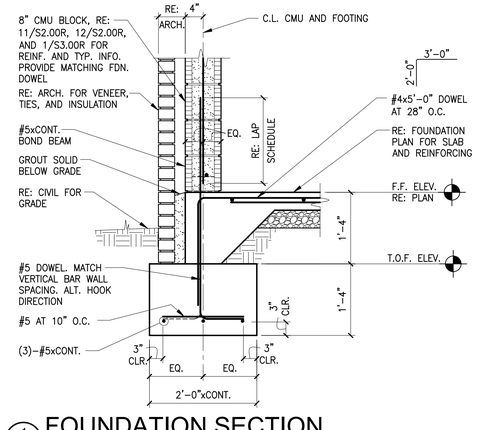

1 / S2.00R FOUNDATION SECTION
3/4" = 1'-0"

wallace design collective

wallace design collective, pc
structural · civil · landscape · survey
410 north walnut avenue, suite 200
oklahoma city, oklahoma 73104
405.236.5858 · 800.364.5858

BID SET

PDG
PLANNING DESIGN GROUP
LANDSCAPE ARCHITECTURE • RECREATIONAL DESIGN • LAND PLANNING
5314 S. YALE AVE., SUITE 710, TULSA, OK 74135
918.628.1255 918.628.1256 FAX
WWW.PLANNINGDESIGNGROUP.COM

gsb inc.
3555 NW 58TH Street
Suite 700-W
Oklahoma City, OK 73112
T: 405.848.9549
F: 405.848.9783
www.gsb-inc.com

Copyright © 2022 GSB, Inc

LICENSED STRUCTURAL ENGINEER DAVID LEE ZUK 21423 OKLAHOMA
06-03-2022
OKLAHOMA CERTIFICATE OF AUTHORIZATION #1460
EXPIRATION DATE: 06/30/2023

PROJECT INFORMATION

PROJECT ADDRESS:
1001 E. ROBINSON ST.,
NORMAN, OKLAHOMA 73071

PROJECT NO.	171511A
DATE	06/03/22
DRAWN BY	CHECKED BY
JL	IG/DZ

GRIFFIN SOCCER COMPLEX
PHASE 6
NORMAN, OKLAHOMA

ISSUE/ REVISIONS

NO.	DATE	DESCRIPTION

OWNER:
THE CITY OF NORMAN PARKS & RECREATION
201-C WEST GRAY
NORMAN, OK 73069
(405) 366-5472

FOUNDATION DETAILS

S2.00R

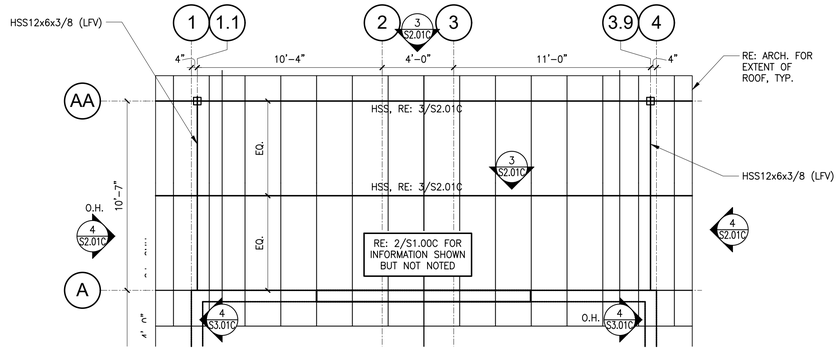

6 S2.01C CANOPY FRAMING PLAN - ADD ALT #1
3/8" = 1'-0"

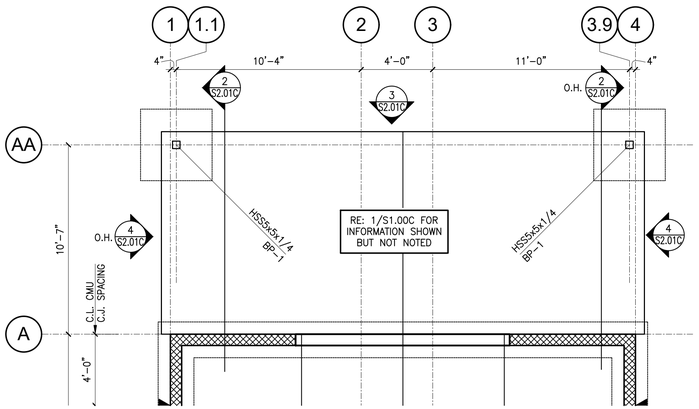

5 S2.01C CANOPY FOUNDATION PLAN - ADD ALT #1
3/8" = 1'-0"

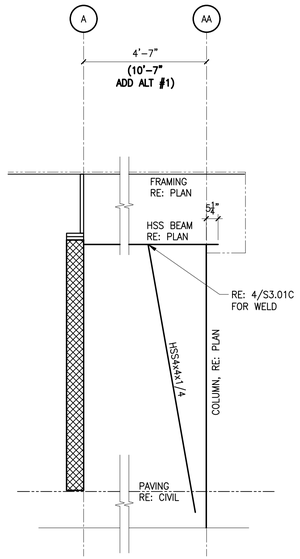

4 S2.01C FRAMING ELEVATION
3/8" = 1'-0"

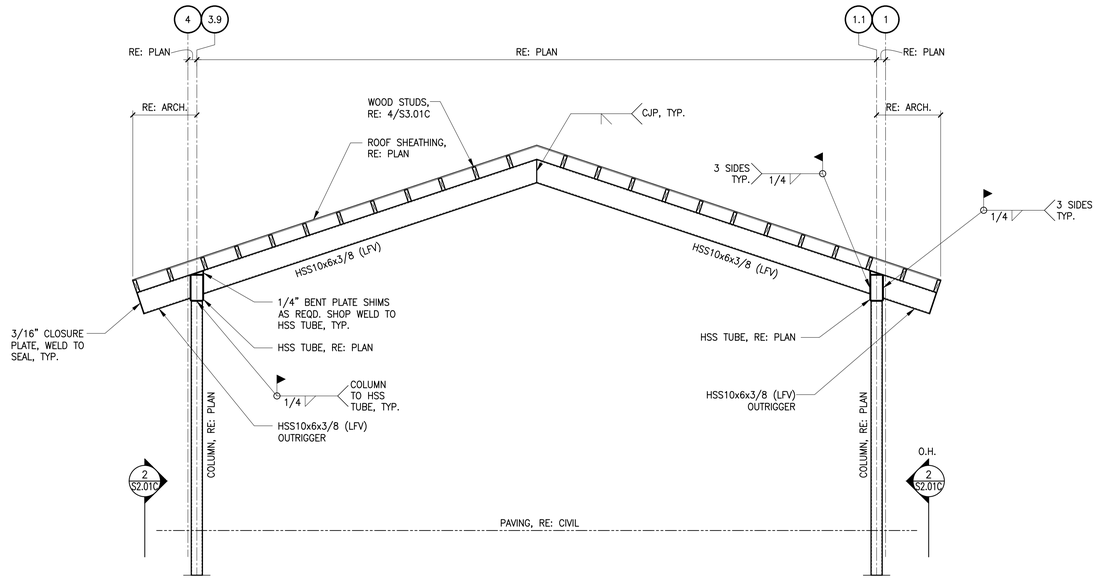

3 S2.01C FRAMING ELEVATION
3/8" = 1'-0"

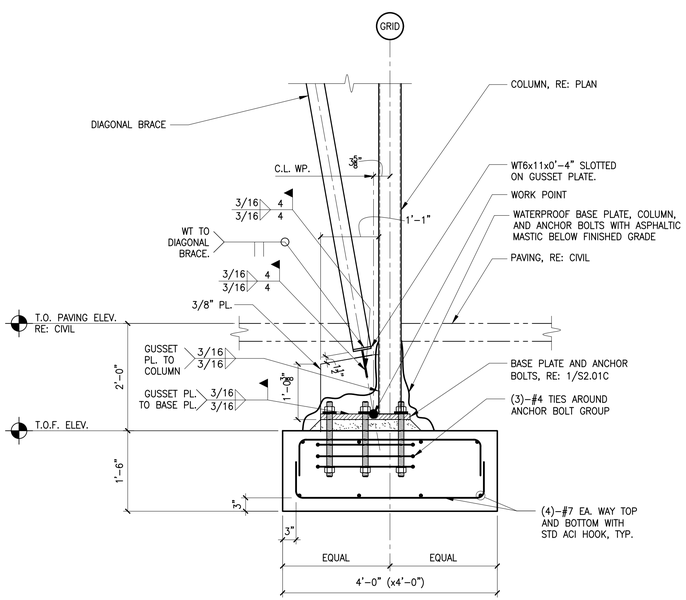

2 S2.01C FOUNDATION SECTION
3/4" = 1'-0"

ANCHOR BOLT SCHEDULE	
BOLT DIAMETER	THREAD PROJ. "B"
1"	6"
3/4"	4"

NOTES:
1. ALL ANCHOR BOLTS TO BE SUPPLIED BY CONTRACTOR WITH 3 NUTS.
2. ANCHOR BOLTS SHALL BE ASTM F1554 GR 36.

GENERAL CONTRACTOR TO SUPPLY ANCHOR BOLTS AND ACCESSORIES

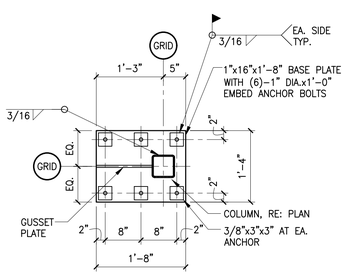

BASE PLATE 1 (BP-1)
NO SCALE

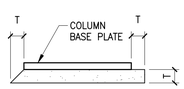

GROUT MAY BE BEVELED OR FORMED BUT SHALL EXTEND A MIN. OF "T" BEYOND FACE OF BASE PLATE. "T" = 1 1/2" FOR ANCHOR BOLT DIA. UP TO 1" AND 2 1/2" FOR 1 1/4" DIA. ANCHOR BOLT.

GROUT PLACEMENT
NO SCALE

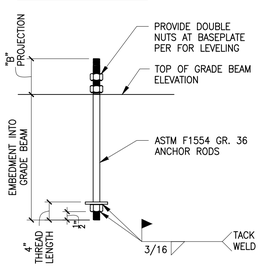

ANCHOR ROD
NO SCALE

1 S2.01C ANCHOR ROD EMBEDMENT/BASE PLATE DIAGRAMS
3/4" = 1'-0"

PDG
PLANNING DESIGN GROUP
LANDSCAPE ARCHITECTURE • RECREATIONAL DESIGN • LAND PLANNING
5314 S. YALE AVE., SUITE 710, TULSA, OK 74135
918.628.1255 918.628.1256 FAX
WWW.PLANNINGDESIGNGROUP.COM

gsb inc
3555 NW 58TH Street
Suite 700-W
Oklahoma City, OK 73112
T: 405.848.9549
F: 405.848.9783
www.gsb-inc.com

Copyright © 2022 GSB, Inc

LICENSED STRUCTURAL ENGINEER DAVID LEE ZUK 21423 OKLAHOMA
06-03-2022
OKLAHOMA CERTIFICATE OF AUTHORIZATION #1460
EXPIRATION DATE: 06/30/2023

PROJECT INFORMATION	
PROJECT ADDRESS:	
1001 E. ROBINSON ST., NORMAN, OKLAHOMA 73071	
PROJECT NO.	171511A
DATE	06/03/22
DRAWN BY	CHECKED BY
JL	IG/DZ

GRIFFIN SOCCER COMPLEX PHASE 6 NORMAN, OKLAHOMA

ISSUE/ REVISIONS

NO.	DATE	DESCRIPTION

OWNER:
THE CITY OF NORMAN PARKS & RECREATION
201-C WEST GRAY
NORMAN, OK 73069
(405) 366-5472

FOUNDATION DETAILS

S2.01C

BID SET

wallace design collective
wallace design collective, pc
structural · civil · landscape · survey
410 north walnut avenue, suite 200
oklahoma city, oklahoma 73104
405.236.5858 · 800.364.5858

DESIGN CRITERIA		
TRUSSES		ROOF
UNIFORM LOADING IN PSF	TCDL	10
	TCLL	20
	BCDL	10
	BCLL	0*
SPACING		24" MAX.

* DESIGN BOTTOM CHORDS FOR MECH. UNITS AND ACCESS WALKWAYS PER MEP PLANS

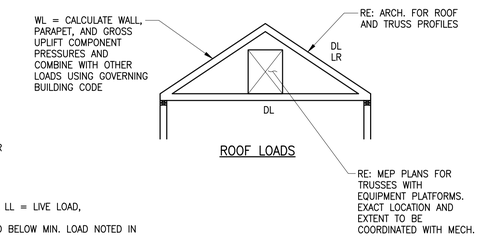

ROOF LOADS

NOTES:
1. TC = TOP CHORD, BC = BOTTOM CHORD, LL = LIVE LOAD, WL = WIND LOAD, DL = DEAD LOAD.
2. ROOF LIVE LOADS SHALL NOT BE REDUCED BELOW MIN. LOAD NOTED IN DESIGN CRITERIA.
3. DEAD LOADS DO NOT INCLUDE SELF-WEIGHT.
4. **TRUSS MANUFACTURER SHALL BE RESPONSIBLE FOR COORDINATING EQUIPMENT LOADS, PENETRATIONS, DUCTS AND CLEARANCE REQUIREMENTS OF ALL OTHER SYSTEMS INCLUDING MECH. PRESENT IN ROOF CAVITY.**
5. **TRUSS MFR. SHALL DETERMINE SNOW DRIFT LOADS AS REQ'D PER CODE.**
6. **TRUSS MANUFACTURER SHALL BE RESPONSIBLE TO DESIGN TRUSSES FOR 50 PLF AT DRAIN LINE LOCATIONS. RE: MECHANICAL FOR LOCATIONS.**
7. RE: ROOF PLAN FOR AXIAL WIND/SEISMIC LOADS AT DRAG TRUSSES.

6 TRUSS LOADING SCHEDULE AND BUILDING LOADS DIAGRAM
S3.00C N.T.S.

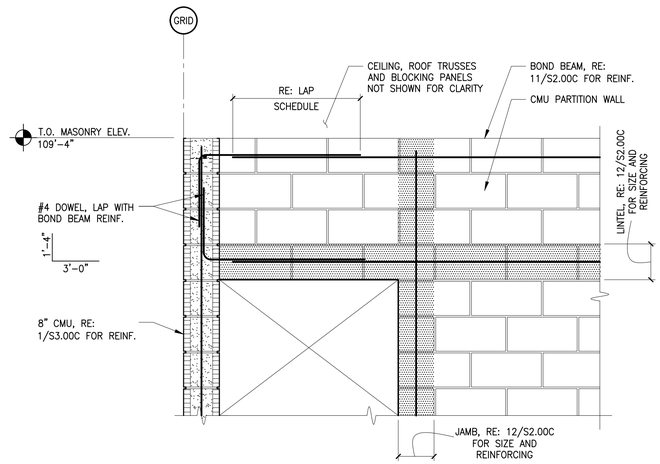

5 REINFORCING AT OPENING
S3.00C N.T.S.

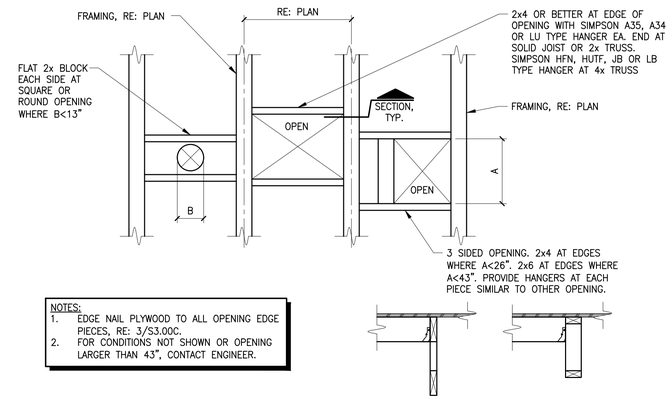

NOTES:
1. EDGE NAIL PLYWOOD TO ALL OPENING EDGE PIECES, RE: 3/S3.00C.
2. FOR CONDITIONS NOT SHOWN OR OPENING LARGER THAN 43", CONTACT ENGINEER.

SECTION

4 PLAN - SMALL OPENING IN PLYWOOD DECK
S3.00C N.T.S.

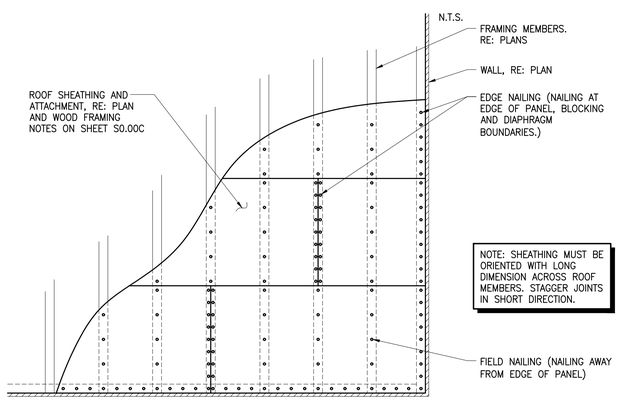

3 WOOD ROOF SHEATHING ATTACHMENT DIAGRAM
S3.00C N.T.S.

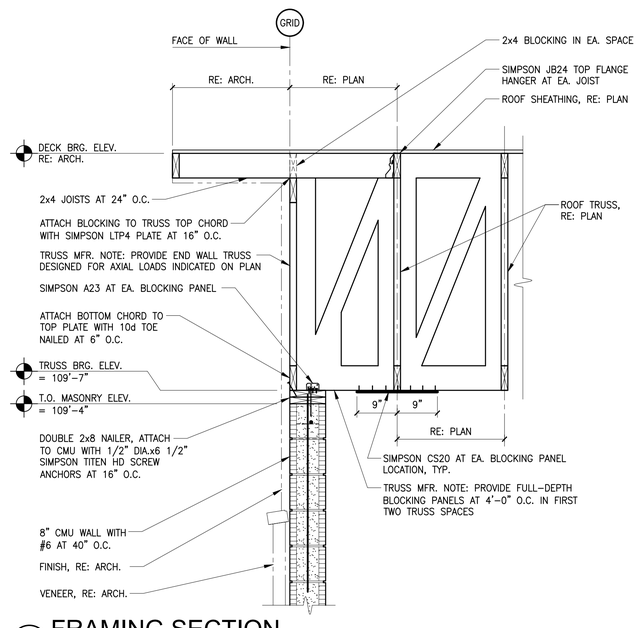

2 FRAMING SECTION
S3.00C 3/4" = 1'-0"

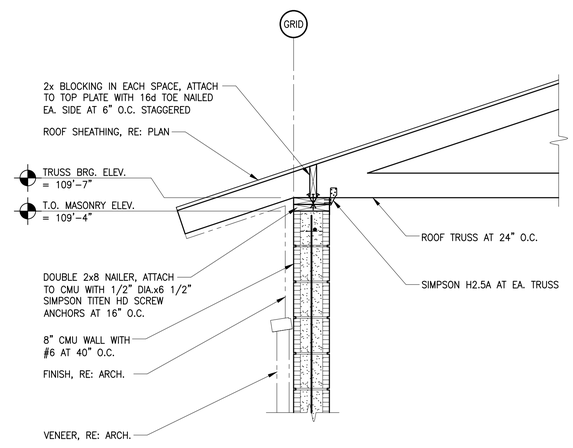

1 FRAMING SECTION
S3.00C 3/4" = 1'-0"

PDG
PLANNING DESIGN GROUP
LANDSCAPE ARCHITECTURE • RECREATIONAL DESIGN • LAND PLANNING
5314 S. YALE AVE., SUITE 710, TULSA, OK 74135
918.628.1255 918.628.1256 FAX
WWW.PLANNINGDESIGNGROUP.COM

gsb inc
3555 NW 58TH Street
Suite 700-W
Oklahoma City, OK 73112
T: 405.848.9549
F: 405.848.9783
www.gsb-inc.com

Copyright © 2022 GSB, Inc

LICENSED STRUCTURAL ENGINEER DAVID LEE ZUK 21423 OKLAHOMA
06-03-2022
OKLAHOMA CERTIFICATE OF AUTHORIZATION #1460
EXPIRATION DATE: 06/30/2023

PROJECT INFORMATION

PROJECT ADDRESS:

1001 E. ROBINSON ST., NORMAN, OKLAHOMA 73071

PROJECT NO.	171511A
DATE	06/03/22
DRAWN BY	CHECKED BY
JL	IG/DZ

GRIFFIN SOCCER COMPLEX
PHASE 6
NORMAN, OKLAHOMA

ISSUE/ REVISIONS

NO.	DATE	DESCRIPTION

OWNER:
THE CITY OF NORMAN PARKS & RECREATION
201-C WEST GRAY
NORMAN, OK 73069
(405) 366-5472

wallace design collective
wallace design collective, pc
structural · civil · landscape · survey
410 north walnut avenue, suite 200
oklahoma city, oklahoma 73104
405.236.5858 · 800.364.5858

BID SET

FRAMING DETAILS

S3.00C

DESIGN CRITERIA		
TRUSSES		ROOF
UNIFORM LOADING IN PSF	TCDL	10
	TCLL	20
	BCDL	10
	BCLL	0*
SPACING		24" MAX.

* DESIGN BOTTOM CHORDS FOR MECH. UNITS AND ACCESS WALKWAYS PER MEP PLANS

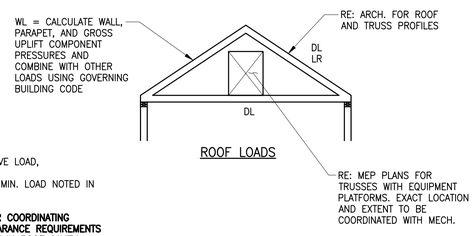

ROOF LOADS

NOTES:
1. TC = TOP CHORD, BC = BOTTOM CHORD, LL = LIVE LOAD, WL = WIND LOAD, DL = DEAD LOAD.
2. ROOF LIVE LOADS SHALL NOT BE REDUCED BELOW MIN. LOAD NOTED IN DESIGN CRITERIA.
3. DEAD LOADS DO NOT INCLUDE SELF-WEIGHT.
4. **TRUSS MANUFACTURER SHALL BE RESPONSIBLE FOR COORDINATING EQUIPMENT LOADS, PENETRATIONS, DUCTS AND CLEARANCE REQUIREMENTS OF ALL OTHER SYSTEMS INCLUDING MECH. PRESENT IN ROOF CAVITY.**
5. **TRUSS MFR. SHALL DETERMINE SNOW DRIFT LOADS AS REQ'D PER CODE.**
6. **TRUSS MANUFACTURER SHALL BE RESPONSIBLE TO DESIGN TRUSSES FOR 50 PLF AT DRAIN LINE LOCATIONS. RE: MECHANICAL FOR LOCATIONS.**
7. RE: ROOF PLAN FOR AXIAL WIND/SEISMIC LOADS AT DRAG TRUSSES.

6 TRUSS LOADING SCHEDULE AND BUILDING LOADS DIAGRAM
S3.00R N.T.S.

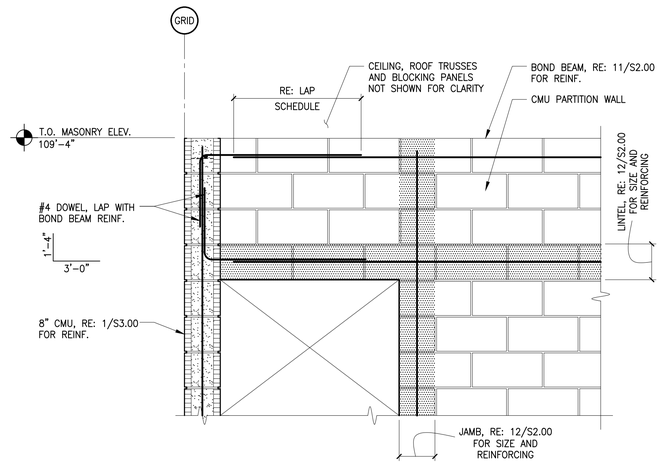

5 REINFORCING AT OPENING
S3.00R N.T.S.

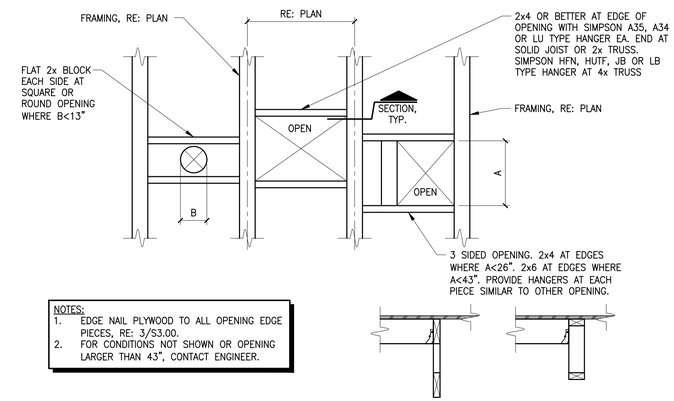

NOTES:
1. EDGE NAIL PLYWOOD TO ALL OPENING EDGE PIECES, RE: 3/S3.00.
2. FOR CONDITIONS NOT SHOWN OR OPENING LARGER THAN 43", CONTACT ENGINEER.

SECTION

4 PLAN - SMALL OPENING IN PLYWOOD DECK
S3.00R N.T.S.

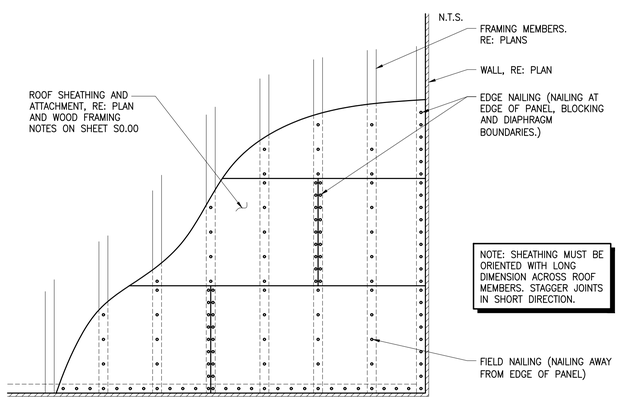

3 WOOD ROOF SHEATHING ATTACHMENT DIAGRAM
S3.00R N.T.S.

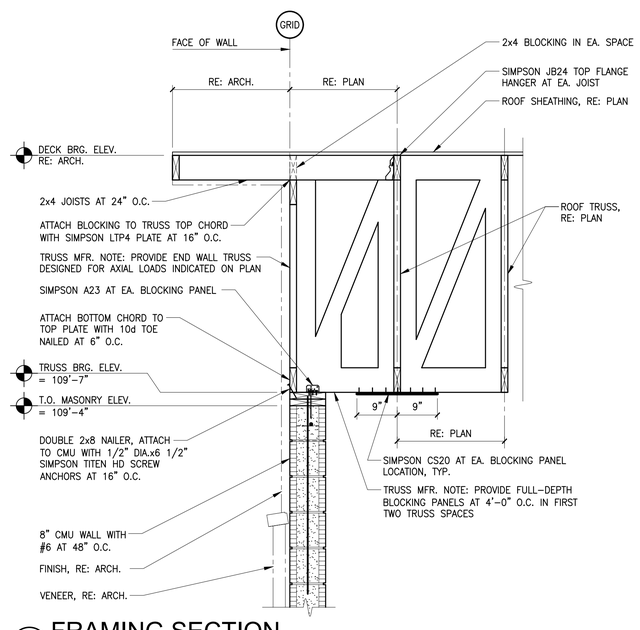

2 FRAMING SECTION
S3.00R 3/4" = 1'-0"

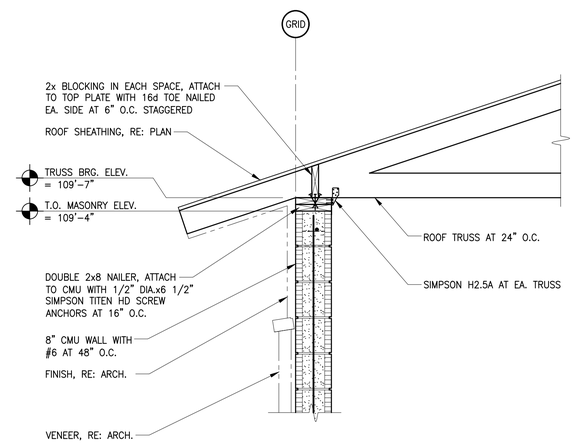

1 FRAMING SECTION
S3.00R 3/4" = 1'-0"

PDG
PLANNING DESIGN GROUP
LANDSCAPE ARCHITECTURE • RECREATIONAL DESIGN • LAND PLANNING
5314 S. YALE AVE., SUITE 710, TULSA, OK 74135
918.628.1255 918.628.1256 FAX
WWW.PLANNINGDESIGNGROUP.COM

gsb inc
3555 NW 58TH Street
Suite 700-W
Oklahoma City, OK 73112
T: 405.848.9549
F: 405.848.9783
www.gsb-inc.com

Copyright © 2022 GSB, Inc

LICENSED STRUCTURAL ENGINEER
DAVID LEE ZUK
21423
OKLAHOMA
06-03-2022
OKLAHOMA CERTIFICATE OF AUTHORIZATION #1460
EXPIRATION DATE: 06/30/2023

PROJECT INFORMATION

PROJECT ADDRESS:

1001 E. ROBINSON ST.,
NORMAN, OKLAHOMA 73071

PROJECT NO.	171511A
DATE	06/03/22
DRAWN BY	CHECKED BY
JL	IG/DZ

GRIFFIN SOCCER COMPLEX
PHASE 6
NORMAN, OKLAHOMA

ISSUE/ REVISIONS

NO.	DATE	DESCRIPTION

OWNER:
THE CITY OF NORMAN PARKS & RECREATION
201-C WEST GRAY
NORMAN, OK 73069
(405) 366-5472

wallace design collective
wallace design collective, pc
structural · civil · landscape · survey
410 north walnut avenue, suite 200
oklahoma city, oklahoma 73104
405.236.5858 · 800.364.5858

BID SET

FRAMING DETAILS

S3.00R

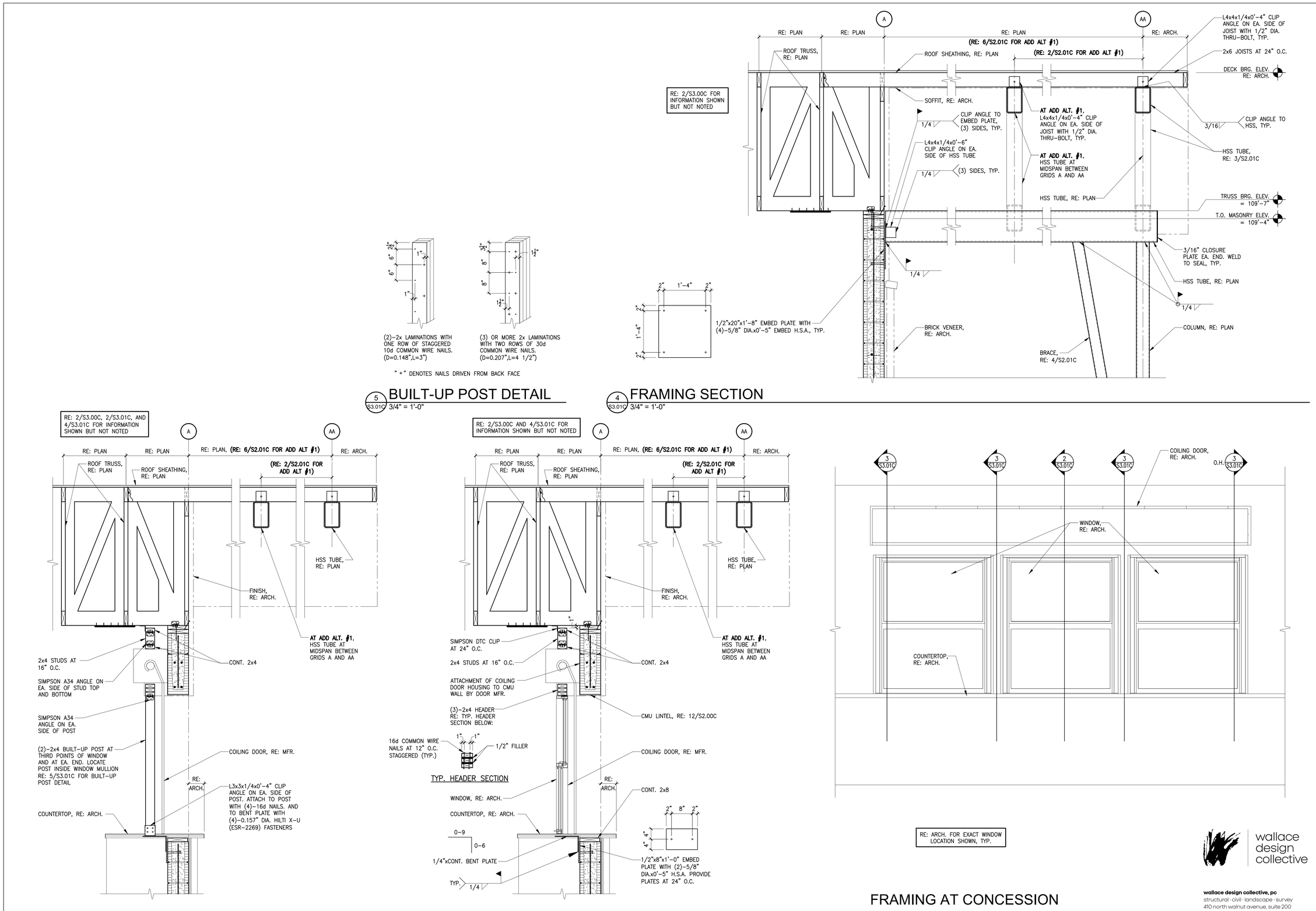

PDG
PLANNING DESIGN GROUP
LANDSCAPE ARCHITECTURE • RECREATIONAL DESIGN • LAND PLANNING
5314 S. YALE AVE., SUITE 710, TULSA, OK 74135
918.628.1255 918.628.1256 FAX
WWW.PLANNINGDESIGNGROUP.COM

gsb inc
3555 NW 58TH Street
Suite 700-W
Oklahoma City, OK 73112
T: 405.848.9549
F: 405.848.9783
www.gsb-inc.com

Copyright © 2022 GSB, Inc

LICENSED STRUCTURAL ENGINEER DAVID LEE ZUK 21423 OKLAHOMA
06-03-2022
OKLAHOMA CERTIFICATE OF AUTHORIZATION #1460
EXPIRATION DATE: 06/30/2023

PROJECT INFORMATION

PROJECT ADDRESS:

1001 E. ROBINSON ST.,
NORMAN, OKLAHOMA 73071

PROJECT NO.	171511A
DATE	06/03/22
DRAWN BY	CHECKED BY
JL	IG/DZ

GRIFFIN SOCCER COMPLEX
PHASE 6
NORMAN, OKLAHOMA

ISSUE/ REVISIONS

NO.	DATE	DESCRIPTION

OWNER:
THE CITY OF NORMAN PARKS & RECREATION
201-C WEST GRAY
NORMAN, OK 73069
(405) 366-5472

wallace design collective

wallace design collective, pc
structural · civil · landscape · survey
410 north walnut avenue, suite 200
oklahoma city, oklahoma 73104
405.236.5858 · 800.364.5858

BID SET

FRAMING DETAILS

S3.01C

MECHANICAL LEGEND

SYMBOL	DESCRIPTION
	PIPE NOTATION
SD	STORM DRAIN LINE (UNDER SLAB)
RD	ROOF DRAIN LINE (ABOVE CEILING)
OFRD	OVERFLOW ROOF DRAIN LINE (ABOVE CEILING)
	SUBSURFACE DRAIN LINE
F	FIRE LINE
G	NATURAL GAS LINE
W	WATER LINE
	SANITARY WASTE LINE
SS	SANITARY SEWER LINE
V	VENT LINE
AW	ACID WASTE
AV	ACID VENT
	DOMESTIC COLD WATER LINE
	DOMESTIC HOT WATER LINE
	DOMESTIC HOT WATER RETURN LINE
CDWS	CHILLED DRINKING WATER SUPPLY
CDWR	CHILLED DRINKING WATER RETURN
HWS	HEATING WATER SUPPLY LINE
HWR	HEATING WATER RETURN LINE
CHS	CHILLED WATER SUPPLY
CHR	CHILLED WATER RETURN
CS	CONDENSER WATER SUPPLY
CR	CONDENSER WATER RETURN
S_	STEAM LINE (WITH PRESSURE INDICATED)
SCR	STEAM CONDENSATE RETURN
SV	STEAM VENT
RS	REFRIGERANT SUCTION
RL	REFRIGERANT RETURN
N	NITROGEN
O2	OXYGEN
VAC	VACUUM
MA	MEDICAL AIR
N2O	NITROUS OXIDE
A	COMPRESSED AIR
CD	CONDENSATE DRAIN LINE
	PIPE FITTINGS
	90° ELBOW– PLAN
	45° ELBOW– PLAN
	ELBOW UP
	ELBOW DOWN
	TEE– PLAN
	TEE– UP
	TEE– DOWN
	CROSS
	BRANCH– UP
	BRANCH– DOWN
	CAP
	UNION
	VALVES
	BUTTERFLY VALVE
	BALL VALVE
	GATE VALVE
	STRAINER
	THREE WAY VALVE
	CHECK VALVE
	GAS COCK
	PLUG TEE
	PRESSURE RELIEF VALVE
	PRESSURE REDUCING VALVE

SYMBOL	DESCRIPTION
	VALVES
	CONTROL VALVE
	STRAINER W/ DRAIN
	STEAM TRAP
	AIR VENT
	AUTOMATIC AIR VENT
	PIPING EQUIPMENT (SCHEMATIC)
	PRESSURE GAUGE
	PRESSURE GAUGE W/ GAGE COCK
	TEMPERATURE GAUGE
	REDUCER
	AUTOFLOW
	FLEX CONNECTOR
	PUMP
	DRAINS
	FLOOR SINK
	FLOOR DRAIN
	RECTANGULAR DUCT ELBOWS
	MITERED 45° – 90°
	REDUCING 90°
	SMOOTH RADIUS 45° – 90°
	ROUND DUCT ELBOWS
	5 GORE 45° – 90°
	7 GORE 45° – 90°
	MITERED 45° – 90°
	PLEATED 45° – 90°
	SMOOTH 45° – 90°
	OVAL DUCT ELBOWS
	5 GORE 45° – 90°
	7 GORE 45° – 90°
	MITERED 45° – 90°
	MITERED 45° – 90°

SYMBOL	DESCRIPTION
	RECTANGULAR DUCT ELBOWS UP & DOWN
	SUPPLY, OUTDOOR & MAKEUP AIR UP
	SUPPLY, OUTDOOR & MAKEUP AIR DOWN
	RETURN UP
	RETURN DOWN
	EXHAUST UP, RELIEF
	EXHAUST DOWN, RELIEF
	ROUND DUCT ELBOWS UP & DOWN
	SUPPLY, OUTDOOR & MAKEUP AIR UP
	SUPPLY, OUTDOOR & MAKEUP AIR DOWN
	RETURN UP
	RETURN DOWN
	EXHAUST UP, RELIEF
	EXHAUST DOWN, RELIEF
	OVAL DUCT ELBOWS UP & DOWN
	SUPPLY, OUTDOOR & MAKEUP AIR UP
	SUPPLY, OUTDOOR & MAKEUP AIR DOWN
	RETURN UP
	RETURN DOWN
	EXHAUST UP, RELIEF
	EXHAUST DOWN, RELIEF
	DUCT FITTINGS
	CONICAL LATERAL TRANSITION WYE (ROUND)
	TRANSITION (ROUND TO ROUND OR RECTANGULAR TO RECTANGULAR)
	TRANSITION (ROUND TO RECTANGULAR)
	RISE
	DROP
	CAP
	90° VANED ELBOW (RECTANGULAR DUCT)
	ROUND TAP ON ROUND DUCT
	BRANCH ON ROUND DUCT
	TAP ON RECTANGULAR DUCT
	BRANCH ON RECTANGULAR DUCT
	ROUND DUCT TAP ON RECTANGULAR DUCT
	OFFSET (RECTANGULAR)
	ROUND DOUBLE WALL DUCT
	RECTANGULAR DOUBLE WALL DUCT
	FLAT OVAL DOUBLE WALL DUCT
	RECTANGULAR LINED DUCT

SYMBOL	DESCRIPTION
	GRILLES & DIFFUSERS & ACCESSORIES
	SUPPLY DIFFUSER CEILING
	RETURN GRILLE CEILING
	ROUND DIFFUSER OR GRILLE
	LINEAR DIFFUSER
	WALL DIFFUSER OR GRILLE
	SUPPLY ARROW
	RETURN ARROW
	FIRE DAMPER (RECTANGULAR DUCT)
	FIRE DAMPER (ROUND DUCT)
	DAMPER
T	THERMOSTAT
H	HUMIDISTAT
S	SENSOR
FD	FIRE DAMPER (RECTANGULAR DUCT)
M	MOTORIZED DAMPER
R	REMOTE ACTUATED DAMPER

AIR DEVICE IDENTIFICATION

SUPPLY DIFFUSER, CEILING, SQUARE — TYPE (MARK), NECK SIZE, FACE SIZE, X– XXXX, XXXCFM, AIRFLOW

RETURN OR EXHAUST AIR GRILLE, CEILING — X–XXxXX, TYPE (MARK), FACE SIZE

LINEAR DIFFUSER — TYPE (MARK), # OF SLOTS, LENGTH, X– XXXX, X"–X", XXXCFM, AIRFLOW

WALL DIFFUSER — TYPE (MARK), FACE SIZE, X– XXxXX, XXXCFM, AIRFLOW

SUPPLY DIFFUSER, ROUND — TYPE (MARK), NECK SIZE, X– X"ø, XXXCFM, AIRFLOW

NOTE: ALL SYMBOLS ARE NOT NECESSARILY USED ON THIS PROJECT

ABBREVIATIONS

ABBREVIATION	DESCRIPTION	ABBREVIATION	DESCRIPTION
A.F.F.	ABOVE FINISHED FLOOR	VAV	VARIABLE AIR VOLUME
AHU	AIR HANDLING UNIT	VTR	VENT THRU ROOF
C	CONDENSATE	WH	WATER HEATER
CFM	CUBIC FEET PER MINUTE	X"ø	ROUND DUCT
CHWP	CHILLED WATER PUMP	X"xX"ø	OVAL DUCT
CHR	CHILLED WATER RETURN	△T	TEMPERATURE DIFFERENCE
CHS	CHILLED WATER SUPPLY		CONNECT TO EXISTING
C.O.	CLEANOUT		
CP	CONDENSATE PUMP		
CR	CONDENSER WATER RETURN		
CS	CONDENSER WATER SUPPLY		
CU	CONDENSING UNIT		
CV	CONTROL VALVE		
CW	COLD WATER		
CWP	CONDENSER WATER PUMP		
CWR	CONDENSER WATER RETURN		
CWS	CONDENSER WATER SUPPLY		
D	DRAIN		
DW	DOMESTIC WATER		
EF	EXHAUST FAN		
ELEV.	ELEVATION		
EXTG	EXISTING		
FCU	FAN COIL UNIT		
FD	FLOOR DRAIN		
F.F.	FINISHED FLOOR		
FL	FLOW LINE		
F.S.	FLOOR SINK		
GAL.	GALLON		
GPM	GALLONS PER MINUTE		
HC	HEATING COIL		
HP	HORSEPOWER		
HW	HOT WATER		
HHWP	HEATING HOT WATER PUMP		
HWS	HOT WATER SUPPLY		
HWR	HOT WATER RETURN		
HX	HEAT EXCHANGER		
MIN.	MINIMUM		
MW	MAKEUP WATER		
N.C.	NOISE CRITERIA		
NO.	NUMBER		
NTS	NOT TO SCALE		
O.A.	OUTSIDE AIR		
PLS	PLACES		
PRV	PRESSURE REDUCING VALVE		
RA	RETURN AIR		
REF	REFERENCE		
RF	RELIEF FAN		
RD	ROOF DRAIN		
RPM	REVOLUTIONS PER MINUTE		
S	STEAM		
SA	SUPPLY AIR		
SCH.	SCHEDULE		
STD	STANDARD		
SP	STATIC PRESSURE		
SV	STEAM VENT		
TYP	TYPICAL		
UH	UNIT HEATER		
UV	UNIT VENTILATOR		

PDG
PLANNING DESIGN GROUP
LANDSCAPE ARCHITECTURE ● RECREATIONAL DESIGN ● LAND PLANNING
5314 S. YALE AVE., SUITE 710, TULSA, OK 74135
918.628.1255 918.628.1256 FAX
WWW.PLANNINGDESIGNGROUP.COM

gsb
3555 NW 58TH Street
Suite 700-W
Oklahoma City, OK 73112
T: 405.848.9549
F: 405.848.9783
www.gsb-inc.com

Copyright ©2022 GSB, Inc

LICENSED PROFESSIONAL ENGINEER
Heath Q. McKee
23072
6/03/2022
OKLAHOMA

PROJECT INFORMATION

PROJECT ADDRESS:

1001 E. ROBINSON ST.,
NORMAN, OKLAHOMA 73071

PROJECT NO.	171511A
DATE	06/03/22
DRAWN BY	CHECKED BY

GRIFFIN SOCCER COMPLEX PHASE 6 NORMAN, OKLAHOMA

ISSUE/ REVISIONS

NO.	DATE	DESCRIPTION

OWNER:
THE CITY OF NORMAN PARKS & RECREATION
201-C WEST GRAY
NORMAN, OK 73069
(405) 366-5472

BID SET

MECHANICAL LEGEND & ABBREVIATIONS

M1.00

ALLEN CONSULTING INCORPORATED
ACI Project No. 126.22.1
CA2192 Expires: 6/30/2022
110 N. Mercedes Dr., Suite 100
Norman, Ok. 73069-8578
Ph.(405)447-2282, Fax(405)447-2284

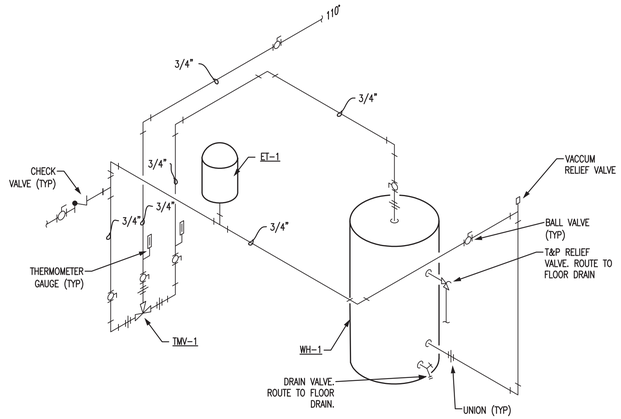

1 WATER HEATER & MIXING VALVE CONNECTION DIAGRAM

SCALE: NTS
REFER:

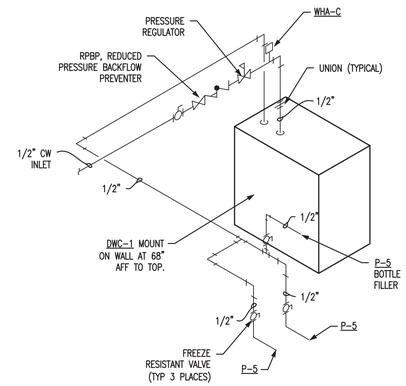

2 DWC-1 WATER CHILLER CONNECTION DIAGRAM

SCALE: NTS
REFER:

GENERAL PLUMBING NOTES:

1. UNLESS OTHERWISE NOTED THE FOLLOWING NOTES SHALL APPLY TO ALL MECHANICAL SHEETS. INCLUDING BUT NOT LIMITED TO ALL MECHANICAL SERIES DRAWINGS.
2. PROVIDE FINAL CONNECTION FOR ALL EQUIPMENT INDICATED AS BEING PROVIDED BY "OTHERS" OR "OWNER".
3. ACCESS PANELS IN SUSPENDED CEILINGS ARE REQUIRED FOR ALL VALVES, TRAPS, DAMPERS, CLEANOUTS, CONTROLS, ETC.
4. PROVIDE UNIONS OR FLANGED CONNECTIONS TO ALLOW ITEMS OF EQUIPMENT REMOVAL W/O MAIN PIPING REMOVAL.
5. PROVIDE VALVES WITH SCREWED, FLANGED, OR HUB ENDS TO MATCH EXISTING CONNECTION AT POINT OF APPLICATION. ARRANGED TO ALLOW FOR REMOVAL OF DEVICES.
6. CONTRACTOR SHALL MAINTAIN FIRE RATING AND WEATHER PROOFING INTEGRITY OF ALL PIPING PENETRATIONS THROUGH ROOFS, WALLS, OR FLOORS.
7. EQUIP VALVES IN INSULATED LINES WITH 2 INCH EXTENSION NECKS.
8. PIPING SHALL BE RUN PARALLEL WITH THE LINES OF THE BUILDING UNLESS DISTINCTLY SHOWN OR NOTED OTHERWISE. AMPLE CLEARANCE FOR INSULATION SHALL BE PROVIDED BETWEEN ADJACENT PIPE AND BETWEEN PIPING AND OTHER WORK. ENDS OF PIPE SHALL BE TEMPORARILY PLUGGED WHILE WORK IS IN PROGRESS TO PREVENT RUBBISH FROM ENTERING THE PIPES.
9. THE CONTRACTOR SHALL MAKE NECESSARY OFFSETS IN PIPING WHERE REQUIRED TO AVOID CONSTRUCTION, DUCTS, OR REQUIRED TO PRESENT A NEAT APPEARANCE, OR NECESSARY TO ALLOW FOR EXPANSION. ESCUTCHEONS SHALL BE INSTALLED ON EXPOSED PIPING WHERE LINES PASS THROUGH BUILDING CONSTRUCTION. PIPING SHALL BE CONCEALED IN FINISHED SPACES, UNLESS DISTINCTLY SHOWN OR OTHERWISE NOTED.
10. FOR ADDITIONAL INFORMATION REGARDING CONNECTION SIZES TO PLUMBING FIXTURES REFER TO PLUMBING FIXTURE SCHEDULE.
11. DRAWINGS ARE SCHEMATIC IN NATURE AND MAY NOT SHOW ALL OFFSETS, TRANSITIONS OR ACCESSORIES REQUIRED FOR A COMPLETE SYSTEM. CONTRACTOR SHALL PROVIDE A COMPLETE AND FUNCTIONING SYSTEM.

KEYED NOTES:

1. INSTALL WALL HYDRANT AT 36" ABOVE FINISH FLOOR.
2. PROVIDE FREEZE RESISTANT VALVES AT BOTTLE FILLER & DRINKING FOUNTAINS. CONNECT 1/2" CHILLED WATER TO EACH DRINKING FOUNTAIN & TO BOTTLE FILLER.

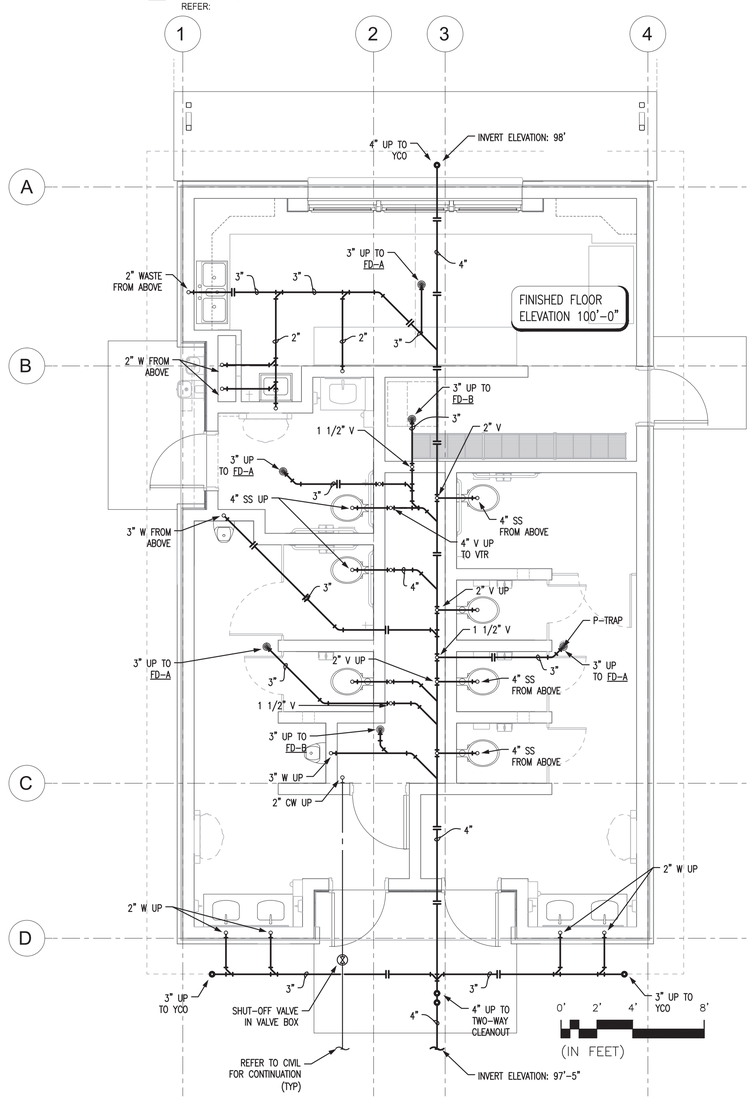

A BELOWFLOOR PLUMBING PLAN (FRONT EXIT)

M2.00C 1/4" = 1'-0"

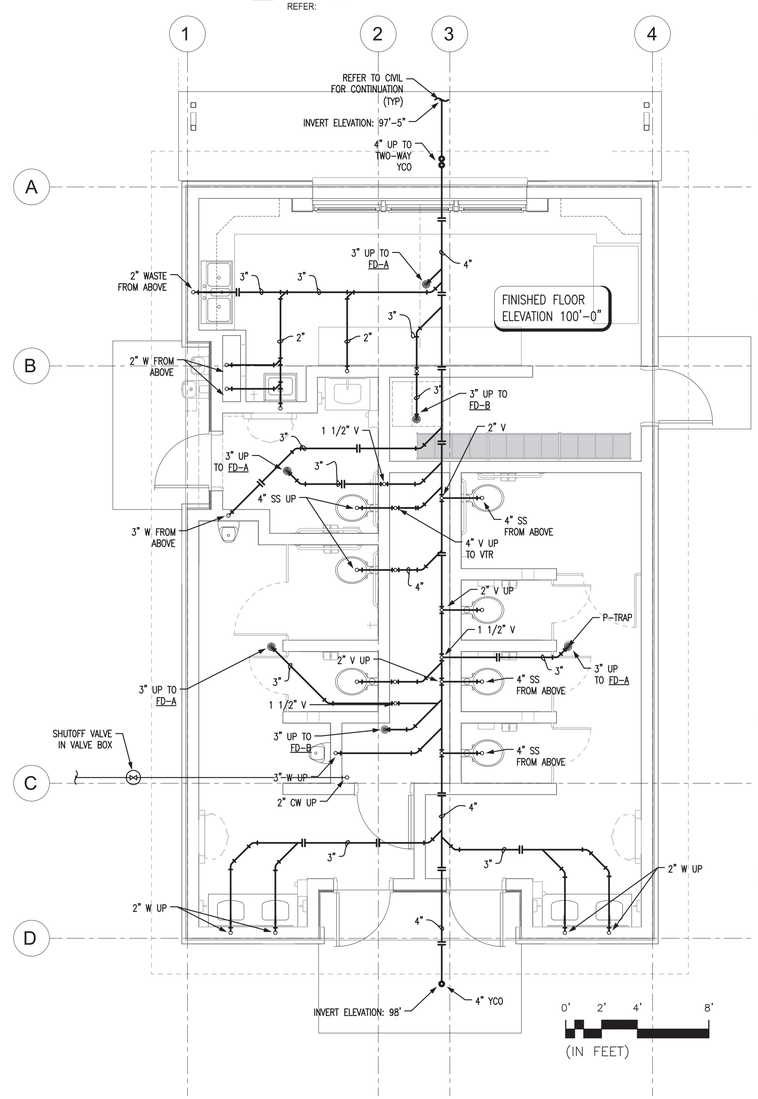

A BELOWFLOOR PLUMBING PLAN (REAR EXIT)

M2.00C 1/4" = 1'-0"

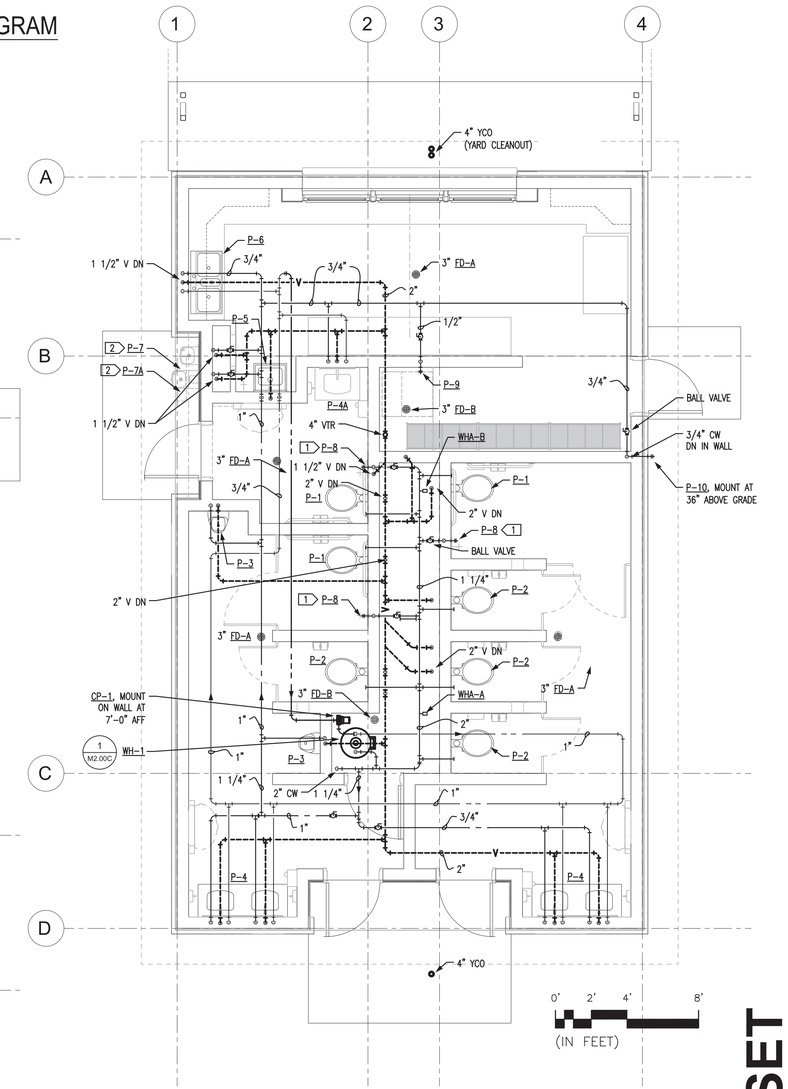

B ABOVEFLOOR PLUMBING PLAN

M2.00C 1/4" = 1'-0"

PDG
PLANNING DESIGN GROUP
LANDSCAPE ARCHITECTURE • RECREATIONAL DESIGN • LAND PLANNING
5314 S. YALE AVE., SUITE 710, TULSA, OK 74135
918.628.1255 918.628.1256 FAX
WWW.PLANNINGDESIGNGROUP.COM

gsb
8555 NW 58TH Street
Suite 700-W
Oklahoma City, OK 73112
T: 405.848.9549
F: 405.848.9783
www.gsb-inc.com

Copyright ©2022 GSB, Inc

LICENSED PROFESSIONAL ENGINEER
Heath Q. McKee
23072
06/03/2022
OKLAHOMA

PROJECT INFORMATION	
PROJECT ADDRESS:	
1001 E. ROBINSON ST., NORMAN, OKLAHOMA 73071	
PROJECT NO.	171511A
DATE	06/03/22
DRAWN BY	CHECKED BY

GRIFFIN SOCCER COMPLEX
PHASE 6
NORMAN, OKLAHOMA

ISSUE/ REVISIONS

NO.	DATE	DESCRIPTION

OWNER:
THE CITY OF NORMAN PARKS & RECREATION
201-C WEST GRAY
NORMAN, OK 73069
(405) 366-5472

PLUMBING PLANS

M2.00C

BID SET

ALLEN CONSULTING INCORPORATED
ACI Project No. 126.22.1
CA2192 Expires: 6/30/2022
110 N. Mercedes Dr., Suite 100
Norman, Ok 73069-6578
Ph.(405)447-2282, Fax(405)447-2284

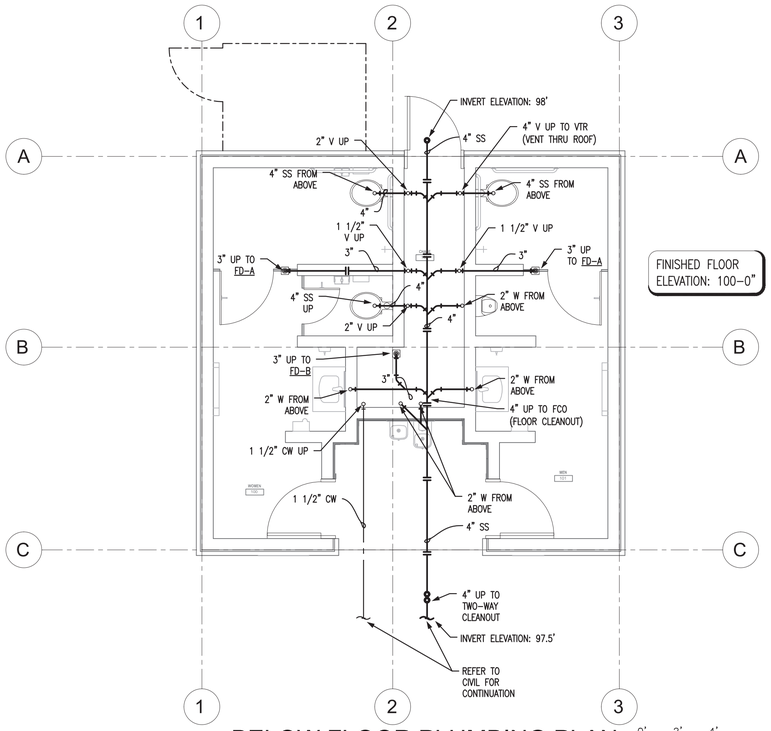

A M2.00R BELOW FLOOR PLUMBING PLAN
1/4" = 1'-0"

0' 2' 4' 8'
(IN FEET)

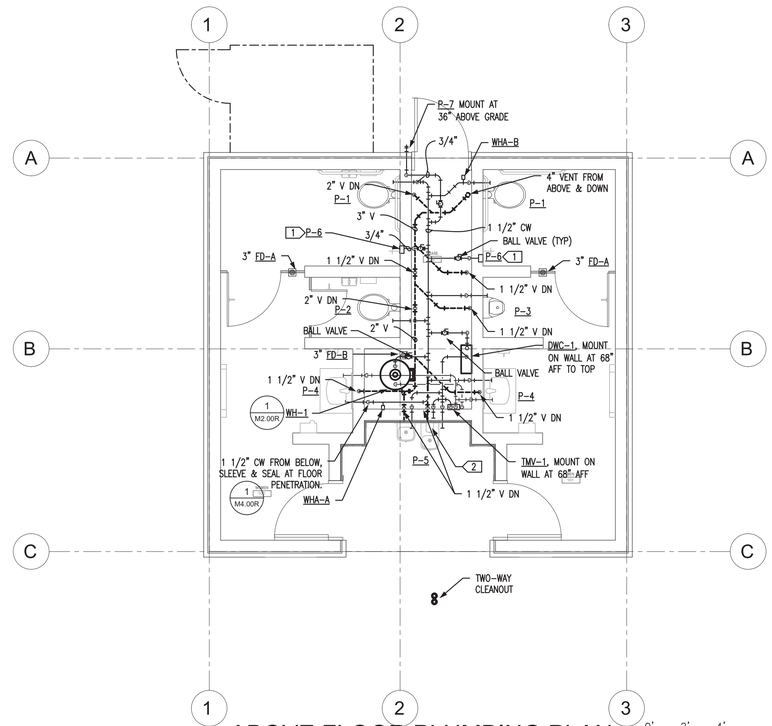

B M2.00R ABOVE FLOOR PLUMBING PLAN
1/4" = 1'-0"

0' 2' 4' 8'
(IN FEET)

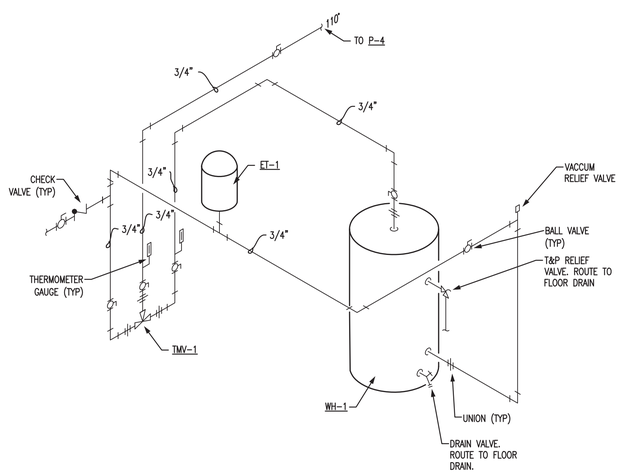

1 WATER HEATER & MIXING VALVE CONNECTION DIAGRAM
SCALE: NTS
REFER:

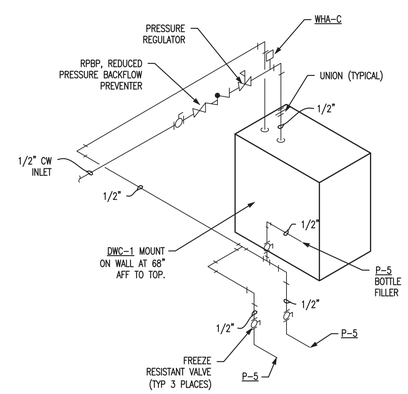

2 DWC-1 WATER CHILLER CONNECTION DIAGRAM
SCALE: NTS
REFER:

GENERAL PLUMBING NOTES:

1. UNLESS OTHERWISE NOTED THE FOLLOWING NOTES SHALL APPLY TO ALL MECHANICAL SHEETS. INCLUDING BUT NOT LIMITED TO ALL MECHANICAL SERIES DRAWINGS.
2. PROVIDE FINAL CONNECTION FOR ALL EQUIPMENT INDICATED AS BEING PROVIDED BY "OTHERS" OR "OWNER".
3. ACCESS PANELS IN SUSPENDED CEILINGS ARE REQUIRED FOR ALL VALVES, TRAPS, DAMPERS, CLEANOUTS, CONTROLS, ETC.
4. PROVIDE UNIONS OR FLANGED CONNECTIONS TO ALLOW ITEMS OF EQUIPMENT REMOVAL W/O MAIN PIPING REMOVAL.
5. PROVIDE VALVES WITH SCREWED, FLANGED, OR HUB ENDS TO MATCH EXISTING CONNECTION AT POINT OF APPLICATION. ARRANGED TO ALLOW FOR REMOVAL OF DEVICES.
6. CONTRACTOR SHALL MAINTAIN FIRE RATING AND WEATHER PROOFING INTEGRITY OF ALL PIPING PENETRATIONS THROUGH ROOFS, WALLS, OR FLOORS.
7. EQUIP VALVES IN INSULATED LINES WITH 2 INCH EXTENSION NECKS.
8. PIPING SHALL BE RUN PARALLEL WITH THE LINES OF THE BUILDING UNLESS DISTINCTLY SHOWN OR NOTED OTHERWISE. AMPLE CLEARANCE FOR INSULATION SHALL BE PROVIDED BETWEEN ADJACENT PIPE AND BETWEEN PIPING AND OTHER WORK. ENDS OF PIPE SHALL BE TEMPORARILY PLUGGED WHILE WORK IS IN PROGRESS TO PREVENT RUBBISH FROM ENTERING THE PIPES.
9. THE CONTRACTOR SHALL MAKE NECESSARY OFFSETS IN PIPING WHERE REQUIRED TO AVOID CONSTRUCTION, DUCTS, OR REQUIRED TO PRESENT A NEAT APPEARANCE, OR NECESSARY TO ALLOW FOR EXPANSION. ESCUTCHEONS SHALL BE INSTALLED ON EXPOSED PIPING WHERE LINES PASS THROUGH BUILDING CONSTRUCTION. PIPING SHALL BE CONCEALED IN FINISHED SPACES, UNLESS DISTINCTLY SHOWN OR OTHERWISE NOTED.
10. FOR ADDITIONAL INFORMATION REGARDING CONNECTION SIZES TO PLUMBING FIXTURES REFER TO PLUMBING FIXTURE SCHEDULE.
11. DRAWINGS ARE SCHEMATIC IN NATURE AND MAY NOT SHOW ALL OFFSETS, TRANSITIONS OR ACCESSORIES REQUIRED FOR A COMPLETE SYSTEM. CONTRACTOR SHALL PROVIDE A COMPLETE AND FUNCTIONING SYSTEM.

KEYED NOTES:

1. INSTALL WALL HYDRANT AT 36" ABOVE FINISH FLOOR.
2. PROVIDE FREEZE RESISTANT VALVES AT BOTTLE FILLER & DRINKING FOUNTAINS. CONNECT 1/2" CHILLED WATER TO EACH DRINKING FOUNTAIN & TO BOTTLE FILLER.

PDG
PLANNING DESIGN GROUP
LANDSCAPE ARCHITECTURE • RECREATIONAL DESIGN • LAND PLANNING
5314 S. YALE AVE., SUITE 710, TULSA, OK 74135
918.628.1255 918.628.1256 FAX
WWW.PLANNINGDESIGNGROUP.COM

gsb inc
3555 NW 58TH Street
Suite 700-W
Oklahoma City, OK 73112
T: 405.848.9549
F: 405.848.9783
www.gsb-inc.com

Copyright ©2022 GSB, Inc

REGISTERED PROFESSIONAL ENGINEER
Heath Q. McKee
23072
6/03/2022
OKLAHOMA

PROJECT INFORMATION

PROJECT ADDRESS:
1001 E. ROBINSON ST.,
NORMAN, OKLAHOMA 73071

PROJECT NO.	171511A
DATE	06/03/22
DRAWN BY	CHECKED BY

GRIFFIN SOCCER COMPLEX
PHASE 6
NORMAN, OKLAHOMA

ISSUE/ REVISIONS

NO.	DATE	DESCRIPTION

OWNER:
THE CITY OF NORMAN PARKS & RECREATION
201-C WEST GRAY
NORMAN, OK 73069
(405) 366-5472

BID SET

PLUMBING PLANS

M2.00R

ALLEN CONSULTING INCORPORATED
ACI Project No. 126.22.2
CA2192 Expires: 6/30/2022
110 N. Mercedes Dr., Suite 100
Norman, Ok 73069-6578
Ph.(405)447-2282, Fax(405)447-2284

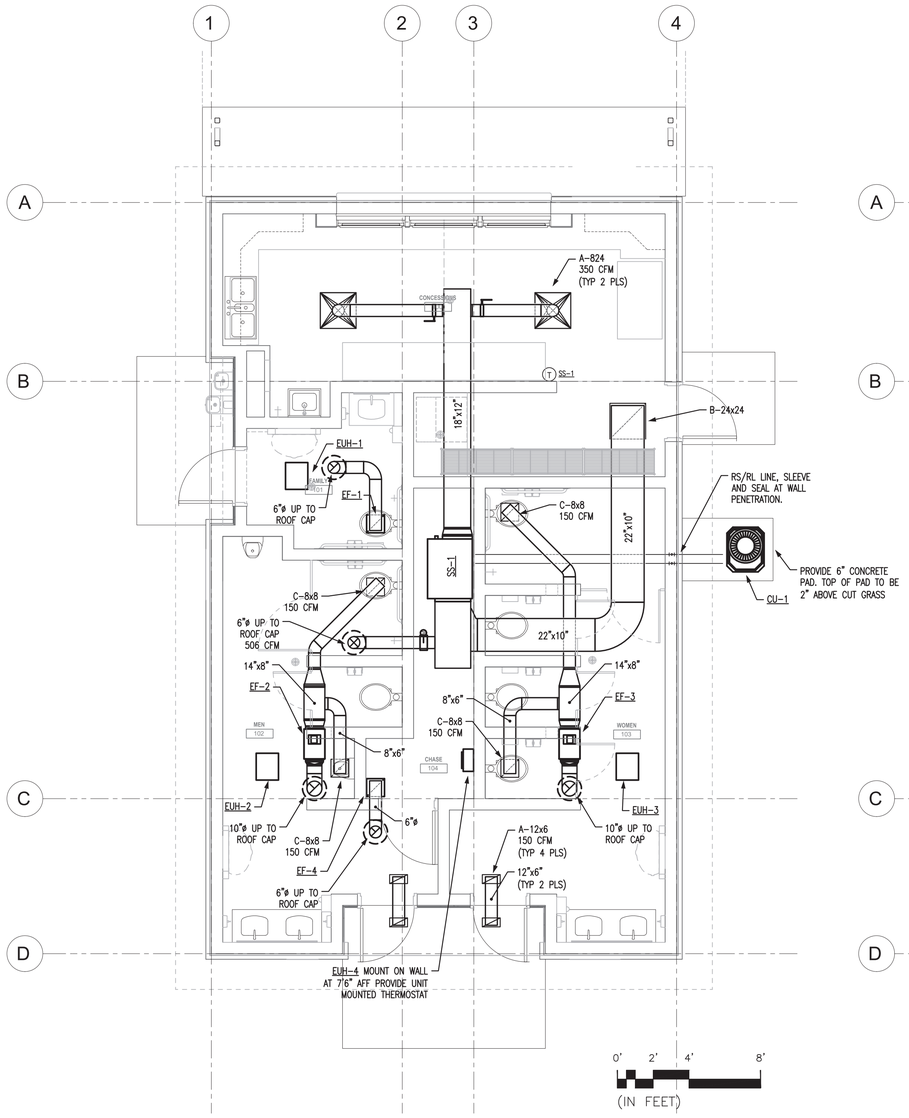

A M3.00C MECHANICAL PLAN
1/4" = 1'-0"

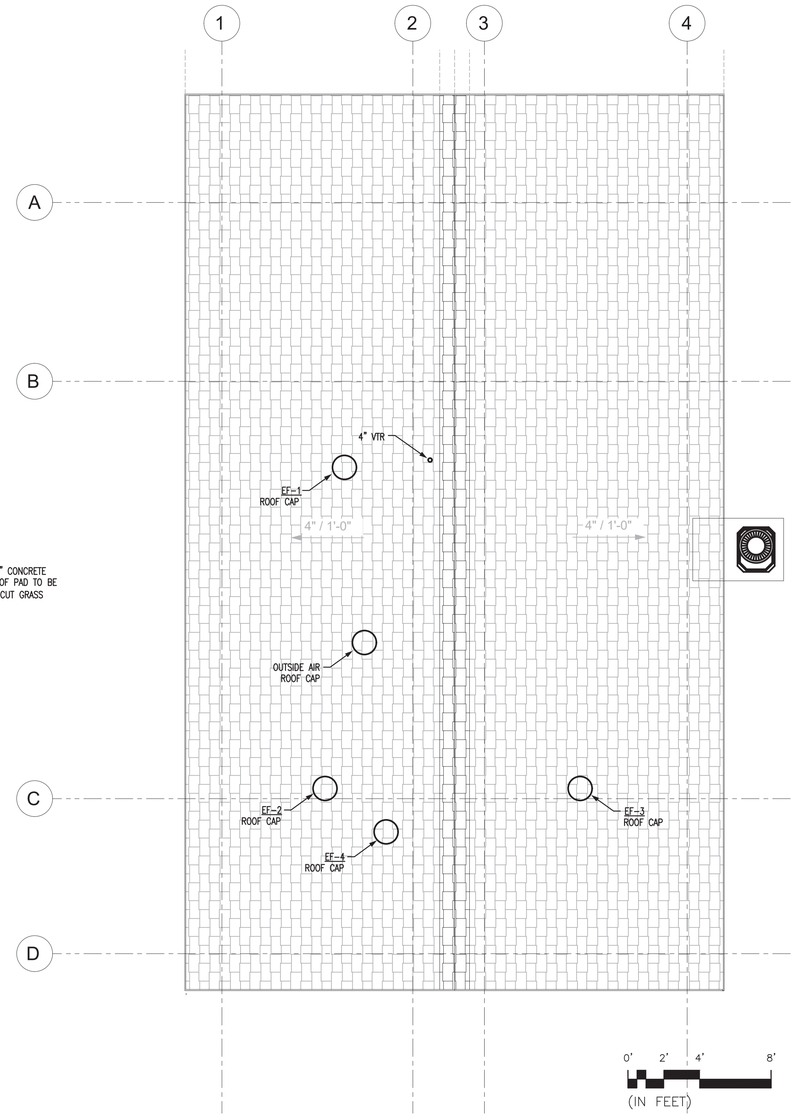

B M3.00C MECHANICAL ROOF PLAN
1/4" = 1'-0"

GENERAL PLUMBING NOTES:

1. UNLESS OTHERWISE NOTED THE FOLLOWING NOTES SHALL APPLY TO ALL MECHANICAL SHEETS. INCLUDING BUT NOT LIMITED TO ALL MECHANICAL SERIES DRAWINGS.
2. PROVIDE FINAL CONNECTION FOR ALL EQUIPMENT INDICATED AS BEING PROVIDED BY "OTHERS" OR "OWNER".
3. ACCESS PANELS IN SUSPENDED CEILINGS ARE REQUIRED FOR ALL VALVES, TRAPS, DAMPERS, CLEANOUTS, CONTROLS, ETC.
4. PROVIDE UNIONS OR FLANGED CONNECTIONS TO ALLOW ITEMS OF EQUIPMENT REMOVAL W/O MAIN PIPING REMOVAL.
5. PROVIDE VALVES WITH SCREWED, FLANGED, OR HUB ENDS TO MATCH EXISTING CONNECTION AT POINT OF APPLICATION. ARRANGED TO ALLOW FOR REMOVAL OF DEVICES.
6. CONTRACTOR SHALL MAINTAIN FIRE RATING AND WEATHER PROOFING INTEGRITY OF ALL PIPING PENETRATIONS THROUGH ROOFS, WALLS, OR FLOORS.
7. EQUIP VALVES IN INSULATED LINES WITH 2 INCH EXTENSION NECKS.
8. PIPING SHALL BE RUN PARALLEL WITH THE LINES OF THE BUILDING UNLESS DISTINCTLY SHOWN OR NOTED OTHERWISE. AMPLE CLEARANCE FOR INSULATION SHALL BE PROVIDED BETWEEN ADJACENT PIPE AND BETWEEN PIPING AND OTHER WORK. ENDS OF PIPE SHALL BE TEMPORARILY PLUGGED WHILE WORK IS IN PROGRESS TO PREVENT RUBBISH FROM ENTERING THE PIPES.
9. THE CONTRACTOR SHALL MAKE NECESSARY OFFSETS IN PIPING WHERE REQUIRED TO AVOID CONSTRUCTION, DUCTS, OR REQUIRED TO PRESENT A NEAT APPEARANCE, OR NECESSARY TO ALLOW FOR EXPANSION. ESCUTCHEONS SHALL BE INSTALLED ON EXPOSED PIPING WHERE LINES PASS THROUGH BUILDING CONSTRUCTION. PIPING SHALL BE CONCEALED IN FINISHED SPACES, UNLESS DISTINCTLY SHOWN OR OTHERWISE NOTED.
10. FOR ADDITIONAL INFORMATION REGARDING CONNECTION SIZES TO PLUMBING FIXTURES REFER TO PLUMBING FIXTURE SCHEDULE.
11. DRAWINGS ARE SCHEMATIC IN NATURE AND MAY NOT SHOW ALL OFFSETS, TRANSITIONS OR ACCESSORIES REQUIRED FOR A COMPLETE SYSTEM. CONTRACTOR SHALL PROVIDE A COMPLETE AND FUNCTIONING SYSTEM.

KEYED NOTES:

1. INSTALL WALL HYDRANT AT 36" ABOVE FINISH FLOOR.
2. PROVIDE FREEZE RESISTANT VALVES AT BOTTLE FILLER & DRINKING FOUNTAINS. CONNECT 1/2" CHILLED WATER TO EACH DRINKING FOUNTAIN & TO BOTTLE FILLER.

PDG
PLANNING DESIGN GROUP
LANDSCAPE ARCHITECTURE ● RECREATIONAL DESIGN ● LAND PLANNING
5314 S. YALE AVE., SUITE 710, TULSA, OK 74135
918.628.1255 918.628.1256 FAX
WWW.PLANNINGDESIGNGROUP.COM

gsb inc
3555 NW 58TH Street
Suite 700-W
Oklahoma City, OK 73112
T: 405.848.9549
F: 405.848.9783
www.gsb-inc.com

Copyright ©2022 GSB, Inc

REGISTERED PROFESSIONAL ENGINEER
Heath Q. McKee
23072
06/03/2022
OKLAHOMA

PROJECT INFORMATION

PROJECT ADDRESS:

1001 E. ROBINSON ST.,
NORMAN, OKLAHOMA 73071

PROJECT NO.	171511A
DATE	06/03/22
DRAWN BY	CHECKED BY

GRIFFIN SOCCER COMPLEX
PHASE 6
NORMAN, OKLAHOMA

ISSUE/ REVISIONS

NO.	DATE	DESCRIPTION

OWNER:
THE CITY OF NORMAN PARKS & RECREATION
201-C WEST GRAY
NORMAN, OK 73069
(405) 366-5472

BID SET

ALLEN CONSULTING INCORPORATED
ACI Project No. 126.22.1
CA2192 Expires: 6/30/2022
110 N. Mercedes Dr., Suite 100
Norman, Ok 73069-6578
Ph.(405)447-2282, Fax(405)447-2284

MECHANICAL PLANS

M3.00C

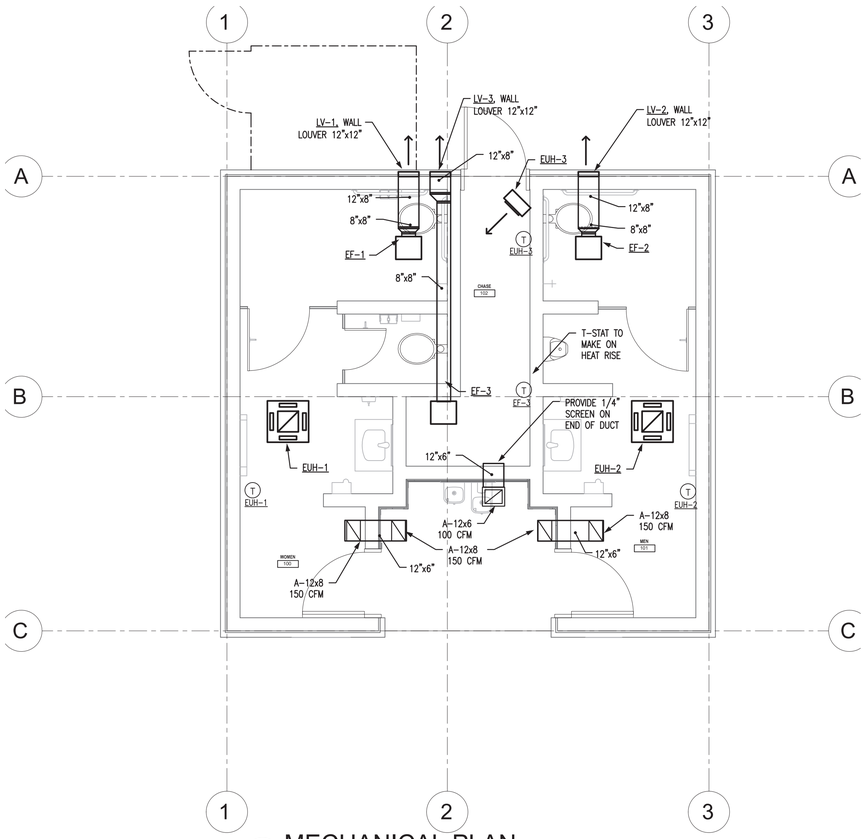

A M3.00R MECHANICAL PLAN
1/4" = 1'-0"

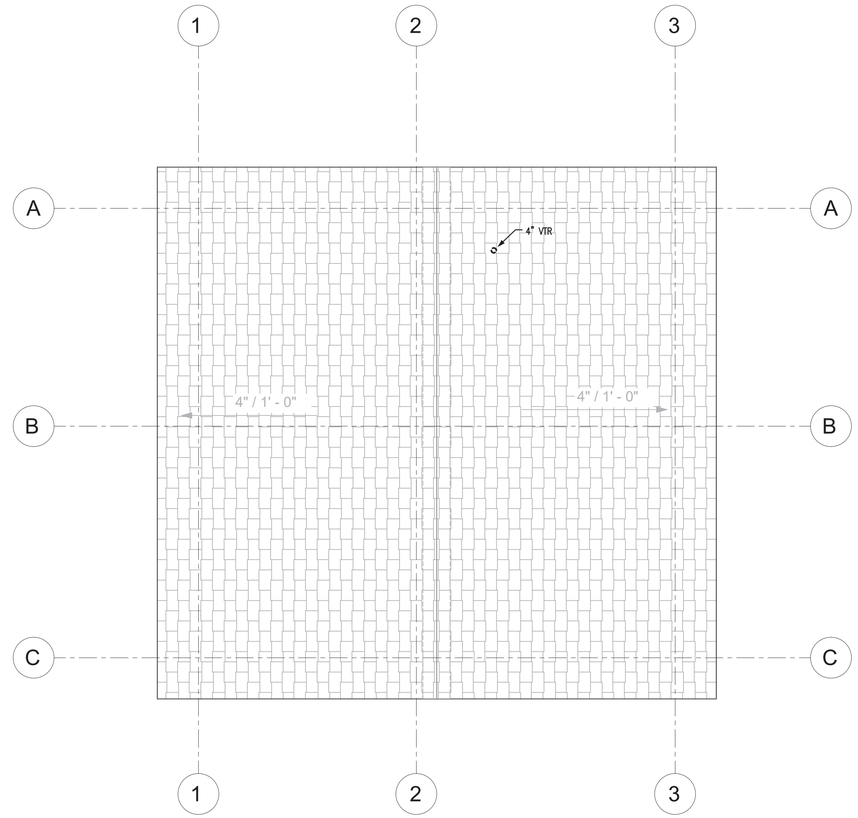

B M3.00R MECHANICAL ROOF PLAN
1/4" = 1'-0"

GENERAL DUCTWORK NOTES:

1. UNLESS OTHERWISE NOTED THE FOLLOWING NOTES SHALL APPLY TO ALL MECHANICAL SHEETS. INCLUDING BUT NOT LIMITED TO ALL M2 SERIES DRAWINGS.
2. COORDINATE EXACT LOCATION OF CEILING MOUNTED AIR DEVICES WITH ARCHITECTURAL REFLECTED CEILING PLANS AND ELECTRICAL LIGHTING PLANS. CONTRACTOR SHALL ADJUST LOCATION OF AIR DISTRIBUTION DEVICES AS REQUIRED TO AVOID CONFLICTS.
3. ALL DUCT DIMENSIONS SHOWN ON PLANS ARE NET FREE AREA'S. SHEET METAL SIZES SHALL BE INCREASED AS NECESSARY FOR LINING OR INSULATION.
4. AS A MINIMUM, DUCT SYSTEMS SHALL BE CONSTRUCTED AND SEALED FOR THE SPECIFIC PRESSURE CLASSIFICATION AS INDICATED BY THE SPECIFICATIONS IN ACCORDANCE WITH THE SMACNA HVAC DUCT CONSTRUCTION STANDARDS MANUAL UNLESS OTHERWISE NOTED. DUCT TAPE SHALL NOT BE ALLOWED FOR SEALING ON ANY SYSTEM.
5. ALL LOW PRESSURE FLEXIBLE DUCT SHALL BE PROPERLY SUPPORTED WITH NO KINKS OR HARD BENDS, 5'-0" MAXIMUM LENGTH. FLEXIBLE DUCT IS ONLY ALLOWED WHERE SPECIFICALLY INDICATED ON DRAWINGS OR DETAILS. NO FLEXIBLE DUCT SHALL BE INSTALLED IN RETURN, EXHAUST, OR OUTSIDE AIR DUCTWORK.
6. LOW PRESSURE DUCT FITTINGS:
   - A. SUPPLY TAKE-OFF TO CEILING SUPPLY DIFFUSERS TO BE CONICAL FLANGED WITH DAMPER. REFER TO SMACNA MANUAL FIGURE 4-6.
   - B. ALL 90 DEGREE ROUND ELBOWS TO HAVE R/D = 1.5'
   - C. ALL 90 DEGREE RECTANGULAR ELBOWS TO BE RADIUSED. WHERE RADIUSED FITTINGS CANNOT BE INSTALLED OR PLANS INDICATE, FITTINGS SHALL HAVE TURNING VANES.
   - D. SQUARE OR SHARP THROAT RADIUSED HEEL FITTINGS ARE NOT ALLOWED. IF FOUND THEY WILL BE REMOVED AND REPLACED WITH AN APPROVED ELBOW.
7. ALL RUN-OUTS TO SUPPLY AIR DEVICES SHALL BE THE SAME SIZE AS THE DIFFUSER NECK AND HAVE A MANUAL VOLUME DAMPER FOR BALANCING. IN AREAS WITH GYP BOARD OR ARCHITECTURAL CEILINGS CONTRACTOR SHALL PROVIDE A CABLE ACTUATED BALANCING DAMPER AND ROUTE THE REMOTE DAMPER ACTUATOR TO AN AREA WITH LAY-IN CEILINGS, OR PROVIDE CONCEALED CEILING TERMINATION KIT WITH PAINTABLE COVERPLATE.
8. ALL DUCTWORK THAT HAS TO BE OFFSET DUE TO AN OBSTRUCTION, SHALL BE OFFSET AT A MAX 30 DEGREE SLOPE. OR OFFSET WITH TWO 45 DEG. ELBOWS WHERE SPACE DOES NOT ALLOW 30 DEGREE SLOPE. UNLESS OTHERWISE NOTED ON PLANS.
9. CLOSELY COORDINATE LOCATION OF INSTALLED EQUIPMENT TO ACHIEVE THE GREATEST ACCESSIBILITY FOR MAINTENANCE PURPOSES.
10. PROVIDE DUCT ACCESS DOOR WITHIN 18' AT:
    - A. EACH FIRE, SMOKE AND COMBINATION FIRE/SMOKE DAMPER
    - B. EACH CONTROL DAMPER
    - C. UPSTREAM AND DOWNSTREAM OF EACH AIR MEASURING STATION
    - D. UPSTREAM AND DOWNSTREAM OF EACH DUCT MOUNTED COIL
    - E. UPSTREAM AND DOWN STREAM OF EACH DUCT MOUNTED HUMIDIFIER.

    SIZE OF DOORS SHALL BE ADEQUATE FOR INSPECTION AND MAINTENANCE OF DUCT MOUNTED EQUIPMENT.
11. ACCESS PANELS IN CEILINGS OTHER THAN LAY-IN TYPE:
    - A. PROVIDE A 24" X 24" PANEL FOR EACH TERMINAL AIR BOX.
    - B. PROVIDE A 24" X 24" PANEL FOR BALANCING DAMPERS, HUMIDIFIERS, VALVES, TRAPS, CLEAN OUTS, CONTROLS, FIRE DAMPERS, ETC.

    CLOSELY COORDINATE LOCATION OF ACCESS PANELS WITH INSTALLED EQUIPMENT TO ACHIEVE GREATEST ACCESSIBILITY FOR MAINTENANCE PURPOSES.
12. ALL THERMOSTATS SHALL BE INSTALLED AT A HEIGHT OF 48" A.F.F. UNLESS NOTED OTHERWISE.
13. DRAWINGS ARE SCHEMATIC IN NATURE AND MAY NOT SHOW ALL OFFSETS, TRANSITIONS OR ACCESSORIES REQUIRED FOR A COMPLETE SYSTEM. CONTRACTOR SHALL PROVIDE A COMPLETE AND FUNCTIONING SYSTEM.
14. DUCTWORK INSTALLATION SHALL BE FREE FROM RATTLES, VIBRATION AND MOVEMENT WHEN IN OPERATION. ALL DUCTWORK SHALL BE CROSS BROKEN OR BEADED TO PREVENT OIL CANNING.
15. ALL DUCTWORK PENETRATING A FIRE RATED WALL SHALL BE A MINIMUM OF 26 GAUGE.

ALLEN CONSULTING INCORPORATED
ACI Project No. 126.22.2
CA2192 Expires: 6/30/2022
110 N. Mercedes Dr., Suite 100
Norman, Ok 73069-6578
Ph.(405)447-2282, Fax(405)447-2284

BID SET

PDG
PLANNING DESIGN GROUP
LANDSCAPE ARCHITECTURE • RECREATIONAL DESIGN • LAND PLANNING
5314 S. YALE AVE., SUITE 710, TULSA, OK 74135
918.628.1255 918.628.1256 FAX
WWW.PLANNINGDESIGNGROUP.COM

gsb inc
3555 NW 58TH Street
Suite 700-W
Oklahoma City, OK 73112
T: 405.848.9549
F: 405.848.9783
www.gsb-inc.com

Copyright ©2022 GSB, Inc

REGISTERED PROFESSIONAL ENGINEER
Heath Q. McKee
23072
06/03/2022
OKLAHOMA

PROJECT INFORMATION

PROJECT ADDRESS:

1001 E. ROBINSON ST.,
NORMAN, OKLAHOMA 73071

PROJECT NO.	171511A
DATE	06/03/22
DRAWN BY	CHECKED BY

GRIFFIN SOCCER COMPLEX
PHASE 6
NORMAN, OKLAHOMA

ISSUE/ REVISIONS

NO.	DATE	DESCRIPTION

OWNER:
THE CITY OF NORMAN PARKS & RECREATION
201-C WEST GRAY
NORMAN, OK 73069
(405) 366-5472

MECHANICAL PLANS

M3.00R

Air Device Schedule

MARK	DESCRIPTION	MATERIAL	FUNCTION	MOUNTING	BLADE DEFLECTION	MAX NC	DAMPER	FINISH	MANUFACTURER MODEL NO.	REMARKS
A	PLAQUE DIFFUSER	ALUMINUM	SUPPLY	CEILING / WALL	--	25	OPPOSED BLADE	REFER TO ARCHITECTURAL	TITUS OMNI	PROVIDE DIFFUSER BLANKET
B & C	LOUVERED GRILLE	ALUMINUM	RETURN/ EXHAUST	CEILING / WALL	--	25	OPPOSED BLADE	REFER TO ARCHITECTURAL	TITUS 355FL	

Split System Schedule

MARK	SS-1 2 TON	
FURNACE DATA		
MANUFACTURER	TRANE	
MODEL #	S9V2	
OUTSIDE AIR (CFM)	75	
SUPPLY AIR (CFM)	800	
ESP (IN WG)	0.8	
MOTOR HP	0.5	
MOTOR V/PH/HTZ	120 / 1 / 60	
AMPS/MOCP	9.3 / 15.0	
HEATING EDB/LDB (DEG F)	65 / 132	
INPUT MAX/MIN (MBH)	60	
OUTPUT MAX/MIN (MBH)	58	
FAN SPEED STAGES	2	
FURNACE WEIGHT (LBS)	122*	
AFUE %	96%	
COOLING COIL DATA		
MODEL #	4TXCB004DS3	
WEIGHT (LBS)	50*	
COOLING EDB/EWB (DEG F)	80.0 / 67.0	
COOLING LDB/LWB (DEG F)	60.0 / 57.8	
TOTAL MBH	22.2	
SENSIBLE MBH	16.3	
CIRCUITS	1	
SEER	17.25	
CONDENSING UNIT DATA		
MARK	CU-1	
MANUFACTURER	TRANE	
MODEL #	4TTR7024	
WEIGHT (LBS)	240*	
STAGES	2	
SEER	17.25	
FAN QUANITY	1	
UNIT V/PH/HTZ	208-230 / 1 / 60	
UNIT MCA/MOCP	18 / 20.0	
ACCESSORIES AND NOTE	1 THRU 8	

NOTES
1. PROVIDE FULL CASED COILS.
2. UNITS TO BE DIRECT VENTED WITH CONCENTRIC VENT KIT.
3. PROVIDE HAIL GUARD.
4. PROVIDE MULTI-STAGE 7 DAY DIGITAL PROGRAMMABLE THERMOSTAT WITH LCD DISPLAY.
5. PROVIDE GPS GLOBAL PLASMA SYSTEM ON UNIT FOR AIR CLEANING
6. ALL UNITS SHALL HAVE A MINIMUM OF 2 STAGES OF HEATING AND COOLING.
7. PROVIDE FACTORY REAR RETURN AIR FILTER CABINET WITH ANGLE FILTERS.
8. FURNACE FAN MOTOR SHALL HAVE TWO FAN SPEEDS TO MATCH COMPRESSOR STAGING.

Plumbing Fixture Schedule

MARK	FIXTURE	MANUFACTURER MODEL	SIZE/MOUNT	ROUGH-IN SCHEDULE CW	HW	WASTE	VENT	FITTINGS & REMARKS
P-1	WATER CLOSET ADA	KOHLER K-4368	FLOOR MOUNT 17 1/2" AFF	1"	-	4"	2"	PROVIDE PROFLO PFTSCOFH2000WH HEAVY DUTY COMMERCIAL SEAT, SLOAN DFB 111-1.6 SMOOTH HARD WIRED SENSOR FLUSH VALVE, AND RUBBER FLOOR SEAL
P-2	WATER CLOSET	KOHLER K-4350	FLOOR MOUNT 15" AFF	1"	-	4"	2"	PROVIDE PROFLO PFTSCOFH2000WH HEAVY DUTY COMMERCIAL SEAT, SLOAN DFB 111-1.6 SMOOTH HARD WIRED SENSOR FLUSH VALVE, AND RUBBER FLOOR SEAL
P-3	URINAL	KOHLER K-5016-ETSS	WALL HUNG	3/4"	-	2"	1 1/2"	PROVIDE SLOAN DFB 186-0.5 SMOOTH HARD WIRED SENSOR FLUSH VALVE, AND WADE FLOOR MOUNTED FIXTURE CARRIER.
P-4	FREQUENCY LAVATORY SYSTEM TWO BOWLS	BRADLEY FL-2H S53-315/4" NSD-TMA-COLOR BY ARCH-COAL-CW-POLY-PT	WALL HUNG 60"x22"	1/2"	1/2"	1 1/2"	1 1/2"	TERREON SOLID SURFACE MATERIAL, STAINLESS STEEL MOUNTING BRACKETS, TWO AERADA 1200 CS 0.5 GPM FAUCETS, PLUG-IN ADAPTER., THERMOSTATIC MIXING VALVE, (BELOW DECK) SUPPLY STOPS, GRID STRAINER, OFFSET TAILPIECE, & P-TRAP W/ CLEANOUT.ORDER IN COLOR SELECTED BY ARCHITECT, WITH STAINLESS STEEL ACCESS PANEL, NO SOAP DISPENSER. CONTRACTOR SHALL PLUG THE PLUG IN ADAPTER TO RECEPTACLE BEHIND SHROUD.
P-4A	FREQUENCY LAVATORY SYSTEM	BRADLEY FL-1L S53-315/4" NSD-TMA-COLOR BY ARCH-COAL-CW-POLY-PT	WALL HUNG 30"x22"	1/2"	1/2"	1 1/2"	1 1/2"	TERREON SOLID SURFACE MATERIAL, STAINLESS STEEL MOUNTING BRACKETS, AERADA 1200 CS 0.5 GPM FAUCET, PLUG-IN ADAPTER., THERMOSTATIC MIXING VALVE, (BELOW DECK) SUPPLY STOPS, GRID STRAINER, OFFSET TAILPIECE, & P-TRAP W/ CLEANOUT.ORDER IN COLOR SELECTED BY ARCHITECT, WITH STAINLESS STEEL ACCESS PANEL, NO SOAP DISPENSER. CONTRACTOR SHALL PLUG THE PLUG IN ADAPTER TO RECEPTACLE BEHIND SHROUD.
P-5	HAND SINK	ADVANCE TABCO 7-PS-56-1X	WALL HUNG	1/2"	1/2"	1 1/2"	1 1/2"	FLOOR MOUNTED CARRIER, SLOAN EFX-200 SENSOR-ACTIUATED FAUCETS, SLOAN SJS-1750 SENSOR-ACTIVATED FOAM SOAP. HARDWIRED, 1.5 GPM, SLOAN MIX-70-A, SUPPLY STOPS, DRAIN ASSEMBLY, P-TRAP W/CLEANOUT. PROVIDE IPS TRUEBRO LAV SHIELD.
P-6	TWO COMPARTMENT SIINK ADA ACCESSIBLE	ELKAY LRADQ331965PD	33"x19.5"x6.5" COUNTER 18 GUAGE	1/2"	1/2"	2"	1 1/2"	ELKAY LK3001CR FAUCET, TWO ELKAY LK-35B STRAINER & DRAIN FITTING, ACORN MODEL ST70 ASSE 1070 MIXING VALVE, SUPPLY STOPS & SUPPLY LINES, P-TRAP W/CLEANOUT AND TRAP CONNECTORS. CONNECT TO GREASE INTERCEPTOR AS INDICATED ON DETAIL.
P-7	FREEZE PROOF BI-LEVEL DRINKING FOUNTAIN W/ BOTTLE FILLER	HAWS 1119FRBP BI-LEVEL FOUNTAIN W/1920FR BOTTLE FILLER	WALL HUNG	1/2" CHILLED (3 PLACES)	--	1 1/2"	1 1/2"	PROVIDE TWO FREEZE RESISTANT IN WALL VALVE MODEL 6521, STAINLESS BACK PANEL BP32, SUPPORT FRAME MODEL 6800 AT FOUNTAIN. PROVIDE MODEL 6521FR FREEZE RESISTANT VALVE ASSEMBLY AT BOTTLE FILLER. PROVIDE ACCESS PANEL THROUGH PLUMBING CHASE TO IN WALL VALVE BOX.
P-8	WALL HYDRANT ON WALL	WOODFORD B74	WALL	3/4"	-	-	-	MOUNT AT 36" ABOVE FINISHED FLOOR, PROVIDE TWO TEE KEYS TO OWNER. PROVIDE ISOLATION BALL VALVE ON BRANCH LINE.
P-9	ICE MAKER CONTRACTOR TO PROVIDE ALL CONNECTION ITEMS	FURNISHED BY OTHERS CONTRACTOR INSTALLED AND FINAL CONNECTIONS	WALL	1/2"	-	-	-	REFER TO FOOD SERVICE PLANS, PROVIDE SUPPLY STOP, INDIRECT WASTE CONNECTION TO FLOOR SINK, WATER FILTER, REDUCED PRESSURE BACKFLOW PREVENTER AND PRESSURE REGULATOR. MOUNT ON WALL AT 60"AFF. MAKE ALL CONNECTIONS REQUIRED BY FOOD SERVICE PLANS.
P-10	FREEZE PROOF WALL HYDRANT	WOODFORD B65	WALL	3/4"	-	-	-	MOUNT AT 36" ABOVE GRADE, PROVIDE TWO TEE KEYS TO OWNER. PROVIDE ISOLATION BALL VALVE ON BRANCH LINE.

Electric Unit Heater Schedule

MARK	TYPE	INPUT KW	OUTPUT MBH	TEMPERATURE RISE (°F)	CFM	VOLTAGE	FLA	WEIGHT LBS	MANUFACTURER MODEL	REMARKS
EUH-1	FAN FORCED CEILING RECESSED HEATER	5	17.07	44	310	208 / 3 / 60	14	31	REZNOR/ECS 50 MOUNT-HG12 OR MARKEL 6300	PROVIDE 2 STAGE THERMOSTAT WITH FAN SWITCH
EUH-2 & 3	FAN FORCED CEILING RECESSED HEATER	10	34.15	51	500	208 / 3 / 60	28	34	REZNOR/ECS10 MOUNT-HG12 OR MARKEL 6300	PROVIDE 2 STAGE THERMOSTAT WITH FAN SWITCH
EUH-4	FAN FORCED HEATER	5	17.1	40	400	208 / 3 / 60	13.9	26	MARKEL HF2B5105N	PROVIDE STRUCTRUAL MOUNTING KIT

NOTES:
1. PROVIDE WALL MOUNTED THERMOSTAT WITH FAN ON-OFF-AUTO.
2. PROVIDE DISCONNECT SWITCH AND CONTROL TRANSFORMER
3. PROVIDE HANGERS AND NECESSARY MOUNTING EQUIPMENT.
4. PROVIDE LOCKING COVER ON THERMOSTAT.
5. EUH-1 AND EUH-2 SHALL BE SECURED TIGHT TO CEILING.

Fan Schedule

MARK	TYPE	CFM	RPM	E.S.P. (INCH)	HP WATTS	ELECTRICAL (V/P/HZ)	CONTROL	SONES MAX	WEIGHT LBS	MANUFACTURER MODEL NO.	NOTES
EF-1	CEILING EXHAUST FAN	75	1100	0.35	- 19 W	120/1/60	THERMOSTAT TO MAKE ON HEAT RISE	1.2	22	GREENHECK SP-A125	1, 2, 3, 4 5 & 6
EF-2 & 3	INLINE EXHAUST FAN	300	1288	0.5	- 135	120/1/60	INTERLOCK WITH LIGHTS	4.5	34	GREENHECK SP-A390	1, 2, 3, 4 5 & 6
EF-4	CEILING EXHAUST FAN	75	1100	0.35	- 19 W	120/1/60	THERMOSTAT TO MAKE ON HEAT RISE	1.2	22	GREENHECK SP-A125	1, 2, 3, 4 5 & 6

NOTES:
1. FANS SHALL BE SECURED TO STRUCTURE WITH A MINIMUM OF FOUR SPRING HANGERS.
2. PROVIDE ROOF CAP, MECH CONTRACTOR SHALL PROVIDE FLASHING, STORM COLLAR AND INSTALL, SEAL AT ROOF.
3. PROVIDE FAN SPEED CONTROLLER.
4. PROVIDE INTERNAL WIRING PIGTAIL WITH 9' OF FLEXIBLE METAL CONDUIT. ELECTRICAL SHALL CONNECT IN ATTIC SPACE.
5. PROVIDE COMBINATION MOTOR STARTER WITH INTEGRAL OVERLOAD PROTECTION SIZED PER MANUFACTURERS RECOMMENDATIONS.
6. PROVIDE FACTORY MOUNTED AND WIRED DISCONNECT.

Drain Schedule

MARK	TYPE	MANUFACTURER MODEL	BODY MATERIAL	STRAINER MATERIAL	REMARKS
FD-A	FLOOR DRAIN	WADE 1100STD5-27	CAST IRON	NICKEL BRONZE	PROVIDE DEEP SEAL P-TRAP W/ TRAP PRIMER CONNECTION.
FD-B	FLOOR DRAIN	WADE 1102STD5-SS	CAST IRON	STAINLESS STEEL	PROVIDE A.R.E. INTERIOR, SEDIMENT BUCKET, DEEP SEAL P-TRAP W/ TRAP PRIMER CONNECTION.

Water Heater Schedule

MARK	TYPE	STORAGE (GALLONS)	INPUT	RECOVERY @ 90° RISE	MAIN POWER SUPPLY	MANUFACTURER MODEL	WEIGHT (LBS)	WARRANTY	REMARKS
WH-1	TANK TYPE ELECTRIC	30 GAL	4.5 KW	21 GPH	240 / 1 / 60	AO SMITH/ ENT-30	95	10 YEAR	1, 2

NOTES:
1. PROVIDE PRESSURE AND TEMPERATURE RELIEF VALVE AND EXPANSION TANK.
2. PROVIDE ISOLATION VALVES AND EMERGENCY DRAIN PAN.

Water Cooler Chiller Schedule

MARK	TYPE	E.W.T.	L.W.T.	FLOW GPH	ELECTRICAL DATA VOLT/HZ/PH	WATTS	UNIT WEIGHT	MANUFACTURER MODEL
DWC-1	AIR COOLED	80	50	10	120/60/1	490	74 LBS	ELKAY/ ER101Y

Pump Schedule

MARK	TYPE	SERVICE	GPM	HEAD FEET	HP	RPM	VOLTAGE	PUMP EFFICIENCY	PUMP WEIGHT	PUMP SIZE	MANUFACTURER MODEL	REMARKS
CP-1	INLINE	110 DEGREE HOT WATER	2	10	1/12	1725	120/1/60	-	8	-	GRUNDFOS UP15-10SU7P1 TLC	PROVIDE TIMER WITH 7 DAY PROGRAMMABLE SCHEDULE

Water Hammer Arrestor Schedule

MARK	TYPE	SERVICE	FIXTURE UNITS	CONN SIZE	MATERIAL	MANUFACTURER MODEL
WHA-A	BELLOWS	DOMESTIC WATER	1 to 11	3/4"	STAINLESS	WATTS SS-A
WHA-B	BELLOWS	DOMESTIC WATER	12 to 32	1"	STAINLESS	WATTS SS-B

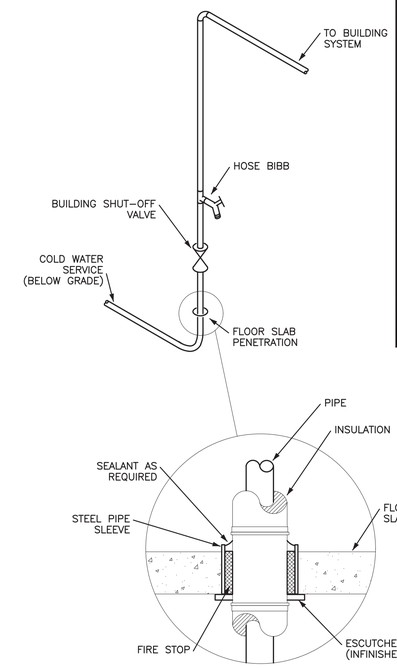

FLOOR PENETRATION

1 DOMESTIC WATER ENTRY DIAGRAM
SCALE: NTS
REFER:

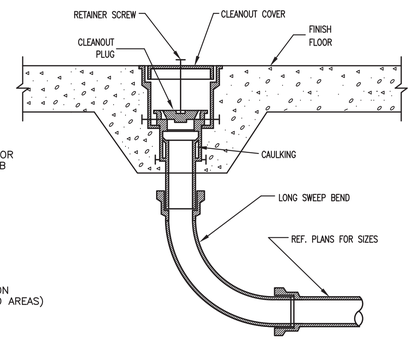

2 INTERIOR CLEANOUT DETAIL
SCALE: NTS
REFER:

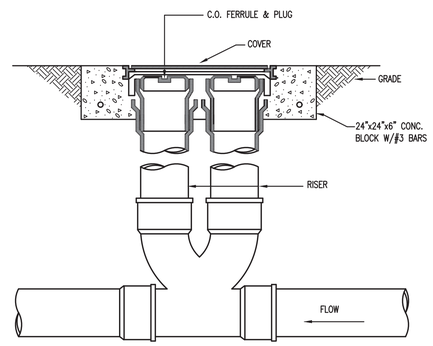

3 EXTERIOR TWO-WAY CLEANOUT DETAIL
SCALE: NTS
REFER:

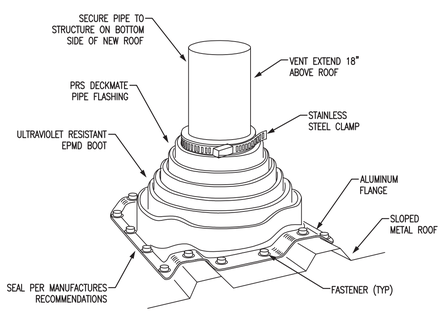

4 TYPICAL PIPE THRU ROOF DETAIL
SCALE: NTS
REFER:

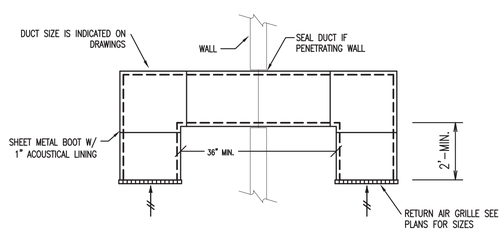

5 ROOM TRANSFER DUCT DETAIL
SCALE: NTS
REFER:

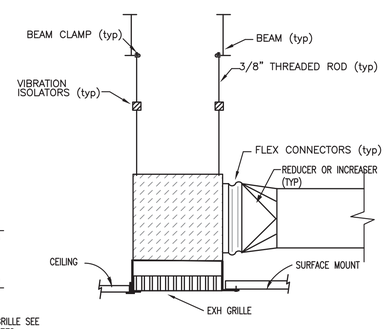

6 EXHAUST FAN DETAIL
SCALE: NTS
REFER:

PDG
PLANNING DESIGN GROUP
LANDSCAPE ARCHITECTURE ● RECREATIONAL DESIGN ● LAND PLANNING
5314 S. YALE AVE., SUITE 710, TULSA, OK 74135
918.628.1255 918.628.1256 FAX
WWW.PLANNINGDESIGNGROUP.COM

gsb
3555 NW 58TH Street
Suite 700-W
Oklahoma City, OK 73112
T: 405.848.9549
F: 405.848.9783
www.gsb-inc.com

Copyright ©2022 GSB, Inc

LICENSED PROFESSIONAL ENGINEER
Heath Q. McKee
23072
6/03/2022
OKLAHOMA

PROJECT INFORMATION

PROJECT ADDRESS:

1001 E. ROBINSON ST.,
NORMAN, OKLAHOMA 73071

PROJECT NO.	171511A
DATE	06/03/22
DRAWN BY	CHECKED BY

GRIFFIN SOCCER COMPLEX
PHASE 6
NORMAN, OKLAHOMA

ISSUE/ REVISIONS

NO.	DATE	DESCRIPTION

OWNER:
THE CITY OF NORMAN PARKS & RECREATION
201-C WEST GRAY
NORMAN, OK 73069
(405) 366-5472

BID SET

MECHANICAL SCHEDULES & DETAILS

M4.00C

ALLEN CONSULTING INCORPORATED
ACI Project No. 126.22.1
CA2192 Expires: 6/30/2022
110 N. Mercedes Dr., Suite 100
Norman, Ok 73069-6578
Ph.(405)447-2282, Fax(405)447-2284

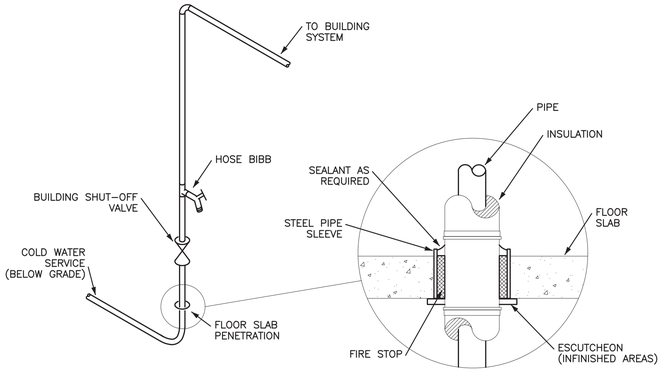

FLOOR PENETRATION

1 DOMESTIC WATER ENTRY DIAGRAM

SCALE: NTS
REFER:

Plumbing Fixture Schedule

MARK	FIXTURE	MANUFACTURER MODEL	SIZE/MOUNT	ROUGH-IN SCHEDULE CW	HW	WASTE	VENT	FITTINGS & REMARKS
P-1	WATER CLOSET ADA	KOHLER K-4368	FLOOR MOUNT 17 1/2" AFF	1"	-	4"	2"	PROVIDE PROFLO PFTSCOFH2000WH HEAVY DUTY COMMERCIAL SEAT, SLOAN DFB 111-1.6 SMOOTH HARD WIRED SENSOR FLUSH VALVE, AND RUBBER FLOOR SEAL
P-2	WATER CLOSET	KOHLER K-4350	FLOOR MOUNT 15" AFF	1"	-	4"	2"	PROVIDE PROFLO PFTSCOFH2000WH HEAVY DUTY COMMERCIAL SEAT, SLOAN DFB 111-1.6 SMOOTH HARD WIRED SENSOR FLUSH VALVE, AND RUBBER FLOOR SEAL
P-3	URINAL	KOHLER K-5016-ETSS	WALL HUNG	3/4"	-	2"	1 1/2"	PROVIDE SLOAN DFB 186-0.5 SMOOTH HARD WIRED SENSOR FLUSH VALVE, AND WADE FLOOR MOUNTED FIXTURE CARRIER.
P-4	FREQUENCY LAVATORY SYSTEM	BRADLEY FL-1L S53-315/4" NSD-TMA-COLOR BY ARCH-COAL-CW-POLY-PT	WALL HUNG 30"x22"	1/2"	1/2"	1 1/2"	1 1/2"	TERREON SOLID SURFACE MATERIAL, STAINLESS STEEL MOUNTING BRACKETS, AERADA 1200 CS 0.5 GPM FAUCET, PLUG-IN ADAPTER,, THERMOSTATIC MIXING VALVE, (BELOW DECK) SUPPLY STOPS, GRID STRAINER, OFFSET TAILPIECE, & P-TRAP W/ CLEANOUT.ORDER IN COLOR SELECTED BY ARCHITECT, WITH STAINLESS STEEL ACCESS PANEL, NO SOAP DISPENSER. CONTRACTOR SHALL PLUG THE PLUG IN ADAPTER TO RECEPTACLE BEHIND SHROUD.
P-5	FREEZE PROOF BI-LEVEL DRINKING FOUNTAIN W/ BOTTLE FILLER	HAWS 1119FRBP BI-LEVEL FOUNTAIN W/1920FR BOTTLE FILLER	WALL HUNG	1/2" CHILLED (3 PLACES)	--	1 1/2"	1 1/2"	PROVIDE TWO FREEZE RESISTANT IN WALL VALVE MODEL 6521, STAINLESS BACK PANEL BP32, SUPPORT FRAME MODEL 6800 AT FOUNTAIN. PROVIDE MODEL 6521FR FREEZE RESISTANT VALVE ASSEMBLY AT BOTTLE FILLER. PROVIDE ACCESS PANEL THROUGH PLUMBING CHASE TO IN WALL VALVE BOX.
P-6	WALL HYDRANT ON WALL	WOODFORD B74	WALL	3/4"	-	-	-	MOUNT AT 12" ABOVE FINISHED FLOOR, PROVIDE TWO TEE KEYS TO OWNER. PROVIDE ISOLATION BALL VALVE ON BRANCH LINE.
P-7	FREEZE PROOF WALL HYDRANT	WOODFORD B65	WALL	3/4"	-	-	-	MOUNT AT 36" ABOVE GRADE, PROVIDE TWO TEE KEYS TO OWNER. PROVIDE ISOLATION BALL VALVE ON BRANCH LINE.

Electric Unit Heater Schedule

MARK	TYPE	INPUT KW	OUTPUT MBH	TEMPERATURE RISE (°F)	CFM	VOLTAGE	FLA	WEIGHT LBS	MANUFACTURER MODEL	REMARKS
EUH-1 & 2	FAN FORCED CEILING RECESSED HEATER	10	34.15	51	500	208 / 3 / 60	28	34	REZNOR/EMC10 MOUNT-HG12 OR MARKEL 6300	PROVIDE 2 STAGE THERMOSTAT WITH FAN SWITCH
EUH-3	FAN FORCED HEATER	5	17.1	40	400	208 / 3 / 60	13.9	26	MARKEL HF2B5105N	PROVIDE STRUCTRUAL MOUNTING KIT

NOTES:
1. PROVIDE WALL MOUNTED THERMOSTAT WITH FAN ON-OFF-AUTO.
2. PROVIDE DISCONNECT SWITCH AND CONTROL TRANSFORMER
3. PROVIDE HANGERS AND NECESSARY MOUNTING EQUIPMENT.
4. PROVIDE LOCKING COVER ON THERMOSTAT.
5. EUH-1 AND EUH-2 SHALL BE SECURED TIGHT TO CEILING.

Louver Schedule

MARK	SIZE (INCHES)	USAGE	N.F.A. SQ. FT.	N.F.A. PERCENT	VELOCITY (ft/min)	CFM/ APD	MATERIAL	MANUFACTURER MODEL	REMARKS
LV-1	12 X 12	EXHAUST	.26	27.1	578	150 / 0.05	ALUMINUM	GREENHECK EDJ-401	PROVIDE INTEGRAL FLANGE, OPPOSED BLADE DAMPER AND 115V OPERATOR, INTERLOCK WITH EF-1
LV-2	12 X 12	EXHAUST	.26	27.1	578	150 / 0.05	ALUMINUM	GREENHECK EDJ-401	PROVIDE INTEGRAL FLANGE, OPPOSED BLADE DAMPER AND 115V OPERATOR, INTERLOCK WITH EF-2
LV-3	12 X 12	EXHAUST	.26	27.1	289	75 0.01	ALUMINUM	GREENHECK EDJ-401	PROVIDE INTEGRAL FLANGE, OPPOSED BLADE DAMPER AND 115V OPERATOR, INTERLOCK WITH EF-3

NOTES:
1. LOUVER FRAME SHALL BE CHANNEL TYPE, SIT FLUSH, AND BE SEALED AT EXTERIOR WALL.
2. LOUVERS SHALL BE FACTORY PAINTED, COLOR SHALL BE GF-103 STONE GRAY.
3. PROVIDE MINIMUM 12" DEEP PLENUM ON BACK OF LOUVER. PLENUM & LOUVER SHALL DRAIN TOWARDS THE EXTERIOR.
4. PROVIDE INSECT AND BIRD SCREEN.
5. PROVIDE 115 VOLT OPPOSED BLADE MOTORIZED DAMPER, INTERLOCK WITH EXHAUST FAN TO OPEN WHEN EXHAUST FAN STARTS. PROVIDE ALL CONTRACTS, RELAYS AND ACCESSORIES NECESSARY FOR INTERLOCK. MECH TO COORDINATE POWER WIIRING WITH ELECTRICAL.
6. CONTRACTOR SHALL COORDINATE FINAL LOUVER SIZES FOR INTEGRAL MOUNTING PRIOR TO ORDERING.

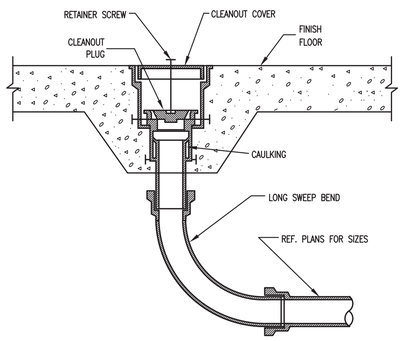

2 INTERIOR CLEANOUT DETAIL

SCALE: NTS
REFER:

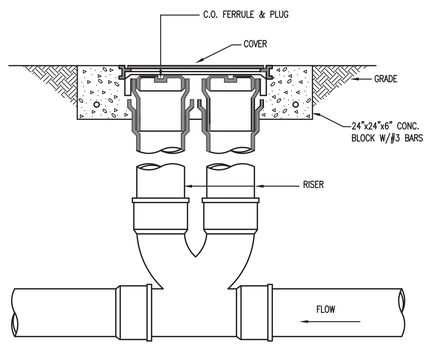

3 EXTERIOR TWO-WAY CLEANOUT DETAIL

SCALE: NTS
REFER:

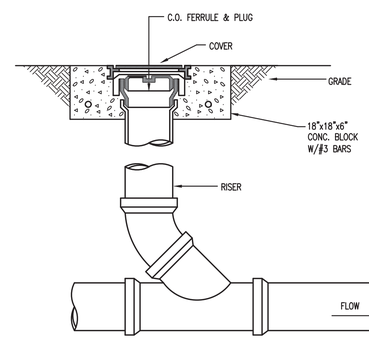

4 EXTERIOR CLEANOUT DETAIL

SCALE: NTS
REFER:

Fan Schedule

MARK	TYPE	CFM	RPM	E.S.P. (INCH)	HP WATTS	ELECTRICAL (V/P/HZ)	CONTROL	SONES MAX	WEIGHT LBS	MANUFACTURER MODEL NO.	NOTES
EF-1 & 2	CEILING EXHAUST FAN	150	713	0.4	- 22 W	120/1/60	INTERLOCK WITH LIGHTS	2.0	34	GREENHECK SP-A200	1, 2, 3, 4 5 & 6
EF-3	EXHAUST FAN	75	1100	0.35	- 19 W	120/1/60	THERMOSTAT TO MAKE ON HEAT RISE	1.2	22	GREENHECK SP-A125	1, 2, 3, 4 5 & 6

NOTES:
1. FANS SHALL BE SECURED TO STRUCTURE WITH A MINIMUM OF FOUR SPRING HANGERS.
2. PROVIDE WALL LOUVER, MECH CONTRACTOR SHALL PROVIDE AND INSTALL, SEAL AT WALL.
3. PROVIDE FAN SPEED CONTROLLER.
4. PROVIDE INTERNAL WIRING PIGTAIL WITH 9' OF FLEXIBLE METAL CONDUIT. ELECTRICAL SHALL CONNECT IN ATTIC SPACE.
5. PROVIDE COMBINATION MOTOR STARTER WITH INTEGRAL OVERLOAD PROTECTION SIZED PER MANUFACTURERS RECOMMENDATIONS.
6. PROVIDE FACTORY MOUNTED AND WIRED DISCONNECT.

Air Device Schedule

MARK	DESCRIPTION	MATERIAL	FUNCTION	MOUNTING	BLADE DEFLECTION	MAX NC	DAMPER	FINISH	MANUFACTURER MODEL NO.	REMARKS
A	LOUVERED GRILLE	ALUMINUM	EXHAUST	CEILING / WALL	--	25	OPPOSED BLADE	REFER TO ARCHITECTURAL	TITUS 355FL	

Drain Schedule

MARK	TYPE	MANUFACTURER MODEL	BODY MATERIAL	STRAINER MATERIAL	REMARKS
FD-A	FLOOR DRAIN	WADE 1100STD5-27	CAST IRON	NICKEL BRONZE	PROVIDE DEEP SEAL P-TRAP W/ TRAP PRIMER CONNECTION.
FD-B	FLOOR DRAIN	WADE 1102STD5-SS	CAST IRON	STAINLESS STEEL	PROVIDE A R.E. INTERIOR, SEDIMENT BUCKET, DEEP SEAL P-TRAP W/ TRAP PRIMER CONNECTION.

Water Heater Schedule

MARK	TYPE	STORAGE (GALLONS)	INPUT	RECOVERY @ 90° RISE	MAIN POWER SUPPLY	MANUFACTURER MODEL	WEIGHT (LBS)	WARRANTY	REMARKS
WH-1	TANK TYPE ELECTRIC	30 GAL	4.5 KW	21 GPH	240 / 1 / 60	AO SMITH/ ENT-30	95	10 YEAR	1, 2

NOTES:
1. PROVIDE PRESSURE AND TEMPERATURE RELIEF VALVE AND EXPANSION TANK.
2. PROVIDE ISOLATION VALVES AND EMERGENCY DRAIN PAN.

Water Cooler Chiller Schedule

MARK	TYPE	E.W.T.	L.W.T.	FLOW GPH	ELECTRICAL DATA VOLT/HZ/PH	WATTS	UNIT WEIGHT	MANUFACTURER MODEL
DWC-1	AIR COOLED	80	50	10	120/60/1	490	74 LBS	ELKAY/ ER101Y

Water Hammer Arrestor Schedule

MARK	TYPE	SERVICE	FIXTURE UNITS	CONN SIZE	MATERIAL	MANUFACTURER MODEL
WHA-A	BELLOWS	DOMESTIC WATER	1 to 11	3/4"	STAINLESS	WATTS SS-A
WHA-B	BELLOWS	DOMESTIC WATER	12 to 32	1"	STAINLESS	WATTS SS-B
WHA-C	BELLOWS	DOMESTIC WATER	30 to 60	1"	STAINLESS	WATTS SS-C

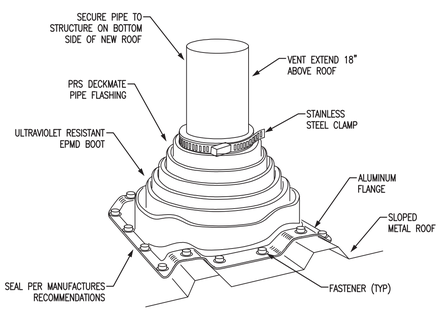

5 TYPICAL PIPE THRU ROOF DETAIL

SCALE: NTS
REFER:

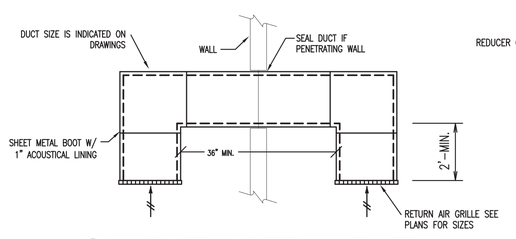

6 ROOM TRANSFER DUCT DETAIL

SCALE: NTS
REFER:

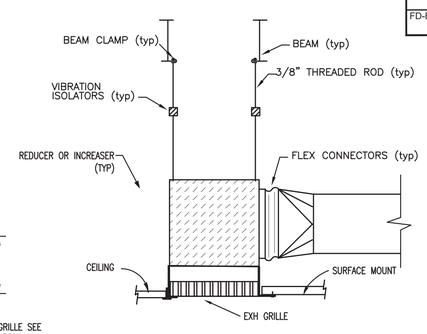

7 EXHAUST FAN DETAIL

SCALE: NTS
REFER:

PDG
PLANNING DESIGN GROUP
LANDSCAPE ARCHITECTURE ● RECREATIONAL DESIGN ● LAND PLANNING
5314 S. YALE AVE., SUITE 710, TULSA, OK 74135
918.628.1255 918.628.1256 FAX
WWW.PLANNINGDESIGNGROUP.COM

gsb
3555 NW 58TH Street
Suite 700-W
Oklahoma City, OK 73112
T: 405.848.9549
F: 405.848.9783
www.gsb-inc.com

Copyright ©2022 GSB, Inc

REGISTERED PROFESSIONAL ENGINEER
Heath Q. McKee
23072
06/03/2022
OKLAHOMA

PROJECT INFORMATION

PROJECT ADDRESS:

1001 E. ROBINSON ST.,
NORMAN, OKLAHOMA 73071

PROJECT NO.	171511A
DATE	06/03/22
DRAWN BY	CHECKED BY

GRIFFIN SOCCER COMPLEX
PHASE 6
NORMAN, OKLAHOMA

ISSUE/ REVISIONS

NO.	DATE	DESCRIPTION

OWNER:
THE CITY OF NORMAN PARKS & RECREATION
201-C WEST GRAY
NORMAN, OK 73069
(405) 366-5472

MECHANICAL SCHEDULES & DETAILS

M4.00R

BID SET

ALLEN CONSULTING INCORPORATED
ACI Project No. 126.22.2
CA2192 Expires: 6/30/2022
110 N. Mercedes Dr., Suite 100
Norman, Ok 73069-6578
Ph.(405)447-2282; Fax(405)447-2284

GENERAL PROVISIONS MECHANICAL - SECTION 15000

PART 1 - GENERAL

1.01 Description

A. This contractor shall furnish, deliver, erect, and connect complete all the materials and appliances described herein and also all the materials, appliances, tools and transportation, etc., required to make the work complete in accordance with the true intent of the plans and specifications, and as required to leave the system in first-class operating condition, excluding those items stated as work and materials by others.

1.02 Codes, Standards, & Specifications

A. Codes: The basis for the design of this system was the 2015 International Building Code (IBC). In specific, the 2015 International Plumbing Code, 2015 International Mechanical Code, and 2015 International Fire Code were used.

B. Ordinances and Codes: The contractor shall comply fully with all existing and current ordinances, laws and regulations of the city, county, state and national governments, and local utilities, which are applicable to the materials, labor and work under this contract. He shall at all time observe and comply with such regulations and shall protect and indemnify the owner against any claims or liability arising from or based on any violation of it.

C. In case the specifications or plans conflict with such ordinances, laws or regulations, the conflicting portion of work affected shall be installed in strict accordance with the regulations above mentioned; the remainder of the plans and specifications, however, shall remain in full force. In no case will work or materials inferior to these specifications be accepted even if permitted by code. In places where codes conflict, the local code shall have preference.

1.03 Product Handling and Storage

A. Scheduling: This contractor shall be responsible for the proper scheduling, for delivery of his materials, equipment, and etc., to minimize the possibilities of damage or theft.

B. Storage: This contractor shall be responsible for the proper care of all his materials, equipment, etc., delivered at the site. Building materials, contractor's equipment, etc., may be stored on the premises, but the placing of it shall not interfere with the progress of work by other trades and is subject to approval of the architect/general contractor. When any room in the building is used as a shop, storeroom, etc., the one making use of such room will be held responsible for any repairs, patching, or cleaning arising from such use.

C. Damage: This contractor shall protect and be responsible for any damage to his work or material, from the date of agreement until the final acceptance is made, and shall make good without cost to the owner, any damage or loss that may occur during this period. Contractor shall handle all material as directed, so that it may be inspected by the architect/engineer. Should any material be found defective or in any way contrary to the contract, this material, no matter in what stage of completion, may be rejected by the architect, and must be removed from the premises at once.

1.04 Warranty

A. The contractor shall deliver to the owner, via architect, all warranties on all equipment, which are for a longer period than one year.

B. Guarantee: The contractor shall guarantee the apparatus as installed by him to develop the performance as specified and shall guarantee to keep the entire system as installed by him or his subcontractors in repair and perfect working order for one year after date of substantial completion of the project as determined by the architect. The contractor shall furnish free of cost to the owner all materials, labor, and other expenses necessary to comply with the above guarantee.

PART 2 - PRODUCTS

2.01 Scope

A. This contractor shall furnish all products called for or required, whether specifically mentioned or not, for proper and successful operation of the systems. The products shall be new and a standard catalog item of the manufacturer.

2.02 Materials

A. All materials furnished shall be new and a standard catalog product of the manufacturer. Experimental or unproven designs will not be considered.

PART 3 - EXECUTION

3.01 Visit Site

A. This contractor shall visit the site of this building before submitting a proposal on this work, and shall thoroughly familiarize himself with the existing conditions. Failure on his part to do this will not be cause for extras after the contract is signed, by reason of unforeseen conditions.

3.02 Permits

A. All necessary licenses or permits for the carrying out of this work must be secured and paid for by the contractor. The contractor shall be responsible for any damage sustained due to his failure to secure such licenses or permits. This contractor shall pay all taxes applicable to his work or materials.

3.03 Plans & Specifications

A. The specifications and drawings have been made to form the basis for the installation of this contractor's work. The plans and specifications shall be considered as mutually explanatory, and any work required by one, but not by the other shall be performed as though required by both. The plans and specifications are presumed to be accurate but extreme accuracy is not guaranteed. Any errors or ambiguities in the plans and/or specifications that are discovered by the contractor shall be reported to the architect/engineer before work is started. Omission of particular reference to any item necessary for complete installation and proper operation thereof shall not relieve the contractor of the responsibility of furnishing the same at no extra cost. In case of a dispute concerning the true intent and meaning of these plans and specifications, the architect/engineer shall interpret the same, and their interpretation shall be accepted by the contractor as final. Changes from the drawings to make the work conform to the structure and to fit the work of other trades shall be submitted to the architect/engineer for their approval before any deviations are made.

3.04 Cooperation

A. This contractor is cautioned to examine all drawings and specifications relating to all other branches of the work, and he shall make proper provisions to receive all other work. This contractor shall cooperate fully with all other trades on the work. If any part of this contractor's work depends, for proper execution or results upon the work of any other contractor, this contractor shall inspect and promptly report to the architect/general contractor any defects in such work that render it unsuitable for such execution and results. To insure against delaying any other contractor, this contractor shall install immediately any of his work necessary at the time for continuous construction operations, and shall be held responsible for any delays caused due to his negligence. This contractor shall at all times keep in close contact with the project so that all work will proceed without delay.

3.05 Workmanship

A. All work done by this contractor or his subcontractor shall be according to the best practices of the industry. Any work deemed unsatisfactory by the architect/engineer shall be replaced at the contractor's expense.

3.06 Clean Up

A. No waste material or rubbish resulting from this work shall be allowed to accumulate on or about the premises but shall be promptly removed at this contractor's expense.

B. All areas and equipment affected by the work of this contractor shall be left in a clean, orderly state after completion of the project.

GENERAL PLUMBING - SECTION 15001

PART 1 - GENERAL

1.01 Description

A. This contractor shall furnish all labor, materials and equipment required for the complete installation of the plumbing systems as per drawing and/or specification. Specific attention shall be directed to mechanical equipment. Plumbing Contractor shall be responsible for checking heating, air conditioning, and ventilating contractors equipment to insure that all equipment is installed properly with drains, condensate drains, gas piping, flue vents from all plumbing and HVAC gas-fired equipment, and other items as necessary for a complete system.

B. Where water and waste are supplied to a cabinet, a sink must be installed, unless identified as rough-in only. If the fixture is not identified with a P-number, contact the Owners Representative for clarification before bidding. If this is not done a sink of the Owners Representative's choosing will be installed at no additional cost to the Owner.

PART 2 - EXECUTION

2.01 Standards

A. The work to be performed as a part of this contract shall be done by experienced craftsmen in a neat, careful, and workmanlike manner.

B. Cutting, Patching, Openings, Bucks, Sleeves: Cutting, patching, hangers, foundations, openings and bucks, in connection with the installation of this work, shall be accomplished by this contractor, including cutting and patching of concrete, brick, paving, curbs, etc., unless otherwise indicated.

C. Plumbing Vents: All plumbing fixtures shall be independently trapped and individually vented; however, a common vent riser may be installed. Traps shall be placed as close to the fixture as possible, and the vent concealed not more than 24" from that trap. Vent risers shall extend to not less than 10" above the roof. Lead flashing shall be extended up and turned into the top of the pipe to make a weathertight jointing with roof and pipe.

D. Cleanouts: Shall be provided at the ends and at points of change of direction of all drain, soil and waste pipes and branches thereof, at the foot of stacks, at offsets, in horizontal runs at approximately 50' intervals, and at other points where indicated on the plans or where required by the applicable Plumbing Code.

E. Cross Connections: There shall be no cross connections of any type between any water systems and drainage systems. Supplies to water closets, or any other item with inlet below fixture overflow line, shall be provided with back siphonage protection of a positive type.

F. Stop Valves: Supplies for plumbing fixtures shall be furnished with stop valves and air chambers. Air chambers to be the same size as supply, 12" long and concealed. Air chambers on down feed fixtures shall be arranged so they can be drained.

D. Isolation Valves: In general, the location of the principal valves are shown on the plans. In addition to these valves, however, the following shall apply. It is intended that valves be furnished for all supply mains at their source and at branches serving two or more units. All such valves shall be arranged within easy reach or access and if covered by hard surface shall have an access door. Install ball valves on supplies to all plumbing fixtures that are not equipped with stops as part of the fixture trim. Valves shall be type specified or an approved substitution.

E. Fire Stops: Where pipes pass through floor or walls, fill void around pipe with approved fire-resistant rated foam to fill all voids applied in accordance with manufacturer's instructions to achieve required fire rating.

2.02 Plumbing Fixtures

A. See Plumbing Fixture Schedule on the drawings for utility connections, manufacturers and model numbers.

B. All P-traps and tailpieces shall be 17 ga. chrome plated brass. P-trap shall be furnished with bottom cleanout plug. Escutcheons shall be furnished at wall penetrations to completely cover the opening.

C. Water supplies shall be furnished with 1/2" I.P.S. fitting by 3/8" compression, loose key stops. Water supply shall be furnished with a 1/2" male I.P.S. fitting for connection purposes. Care shall be taken to maintain this in close proximity to the wall finish. All water supplies shall be chrome plated brass with stop valve. Escutcheons shall be furnished at wall penetrations to completely cover the opening.

PIPE AND PIPE FITTINGS - SECTION 15140

PART 1 - GENERAL

1.01 Scope

A. This contractor shall furnish all labor and materials, equipment and services necessary for and reasonably incidental to the furnishing and complete installation of all water systems, waste and vent systems, shown on the drawings and/or as herein specified.

PART 2 - PRODUCTS

2.01 Materials

A. Sanitary Waste and Vents and Storm Drainage Lines (Cast Iron):

1. Piping below grade: All waste, vent, sewer and storm lines shall be of cast iron soil pipe and fittings and shall conform to the requirements of CISPI Standard 301 (latest edition), ASTM A888 (latest edition), or ASTM A 74 (latest edition) for all pipe and fittings. Pipe and fitting shall be marked with the collective trademark of the Cast Iron Soil Pipe Institute. Approved manufacturers shall be Charlotte Foundry, Inc., Tyler Pipe, Inc., and American Brass & Iron, Inc. (AB&I).

   a. Joints: Joints for hub and spigot pipe shall be installed with compression gaskets conforming to the requirements of ASTM Standard C 564 (latest edition).

2. Waste lines above grade: All waste, vent, sewer and storm lines shall be cast iron soil pipe and fittings and shall conform to the requirements of CISPI Standard 301 (latest edition), ASTM A888 (latest edition), or ASTM A 74 (latest edition) for all pipe and fittings. Pipe and fitting shall be marked with the collective trademark of the Cast Iron Soil Pipe Institute. Approved manufacturers shall be Charlotte Foundry, Inc., Tyler Pipe, Inc., and American Brass & Iron, Inc. (AB&I).

   a. Joints: Joints for hubless pipe and fittings shall conform to the manufacturer's installation instructions, the CISPI Standard 310 (latest edition) and local code requirements. Hubless coupling gaskets shall conform to ASTM Standard C 564 (latest edition).

B. Domestic cold water, hot water, and hot water return:

1. Piping underground: Shall be Type "K" hard copper pipe with wrought copper fittings and #6 cadmium-free silver solder joints, or Type "K" soft copper pipe with bends in piping and no copper fittings or joints under slabs. Piping 3 inches and larger shall be water-service weight cast iron with approved mechanical joint, and shall have bolted anchor rods to next joint at all changes in direction. Provide a shut-off valve and valve box for the water service at the building entrance.

2. Piping above ground: Shall be Type "L" hard copper with wrought copper fittings and lead-free solder joints. Provide a shut-off valve for the water service at the building entrance just above the slab.

3. All exposed piping to plumbing fixtures, kitchen equipment, etc., shall be chrome plated brass.

4. All water lines shall be tested and sterilized before final acceptance.

2.02 Pipe And Fittings

A. Pipe and fittings shall have working pressure ratings suitable for the operating pressures to which they may be subjected. Provide pipe escutcheons on both bare and insulated pipe passing through building construction.

2.03 Pipe Hangers and Supports

A. General: All support components shall conform to Manufacturer's Standardization Society Specification SP-58. Threaded hot rolled carbon steel rod shall conform to ASTM A-107.

B. Installation-Horizontal Piping: Hangers shall adequately support the piping system, located near or at changes in piping direction and concentrated loads, and shall provide vertical adjustment to maintain pitch required for proper drainage. Hangers shall allow for expansion and contraction of the piping, and fastened to building structural members where practical.

C. Vertical Piping: All vertical piping shall be supported at every floor.

D. Support all valves and heavy components independently.

E. Insulated Pipe Supports:

1. Insulated pipe supports shall be supplied and installed by the Mechanical Contractor on all insulated pipe and tubing.

2.05 PART 3 - EXECUTION

3.01 Installation

A. All piping shall be installed in a neat professional like manner. Any piping judged poorly installed by the Owner's Representative shall be replaced by the Contractor at no additional expense to the Owner.

B. "Lead-Free" solder shall be used for all water distribution systems. This is required to comply with the Lead Contamination Control Act.

3.02 Sterilization And Flushing Of Water Piping

A. Upon completion of installation of all domestic water piping, the system shall be thoroughly flushed out and then sterilized by introducing chlorine or a solution of calcium hypochlorite mixture. Fill piping with hot water, slowly applying sterilizing agent proportionately at a rate giving 200 ppm of chlorine. After lines have been thus filled for at least three hours, flush and fill at a rate giving 50 ppm of chlorine for 24 hours. Then test for residual chlorine at extremities of line. If less than 5 ppm is indicated, drain system and repeat sterilization treatment. When tests show at least 5 ppm of residual chlorine, flush out system until all traces of the chemical used are removed.

B. Upon completion of installation of all other water piping, the system shall be thoroughly flushed. This procedure shall be done until all debris, flux, shavings, etc. are completely out of the system. This shall be accomplished prior to installing the control valves on all chilled water, heating hot water, steam lines, and steam condensate return lines. This may require a temporary bypass at each unit.

3.04 Painting of Piping

A. All piping exposed to sight, both interior and exterior, shall be prepared for painting by removing all rust with a wire brush. Then all piping shall be painted with a primer and a finish coat of epoxy paint to match the surrounding environment. The paint samples shall be submitted to the Architect and he shall select the colors.

3.05 Testing and Adjusting

A. The Mechanical Contractor shall test and adjust the various mechanical systems on this job to give the required performance. Pipe work must be properly tested by the Mechanical Contractor and approved by the Architect before being covered up or enclosed by building construction. This contractor will be held responsible, and be required to pay for any damage or expense due to leaks or broken connection that may prove to exist before and after such work is concealed.

1. Waste and vent lines shall be temporarily plugged and filled with water to the roof level, and allowed to remain so for 24 hours without leakage.

2. Domestic hot and cold water, domesitc chilled awater lines shall be made tight without dope or caulking, and shall be tested at 125 lbs. for a period of 12 hours after roughing-in has been complete, without leaking.

DOMESTIC WATER PIPING SPECIALTIES - SECTION 15415

PART 1 - GENERAL

1.1 SUMMARY

A. Section Includes:
1. Water-hammer arresters.
2. Trap-seal primer valves.

1.2 ACTION SUBMITTALS

A. Product Data: For each type of product.

1.3 CLOSEOUT SUBMITTALS

A. Operation and Maintenance Data: For domestic water piping specialties to include in emergency, operation, and maintenance manuals.

PART 2 - PRODUCTS

2.1 GENERAL REQUIREMENTS FOR PIPING SPECIALTIES

A. Potable-water piping and components shall comply with NSF 61.

2.2 PERFORMANCE REQUIREMENTS

A. Minimum Working Pressure for Domestic Water Piping Specialties: 125 psig unless otherwise indicated.

2.3 WATER-HAMMER ARRESTERS

A. Water-Hammer Arresters:
6. Manufacturers: Subject to compliance with requirements, provide products by one of the following:
   b. Precision Plumbing Products, Inc.
   c. Smith, Jay R. Mfg. Co.; Division of Smith Industries, Inc.
   d. Tyler Pipe; Wade Div.
   e. Zurn Industries, LLC; Plumbing Products Group; Specification Drainage Products.
2. Standard: ASSE 1010 or PDI-WH 201.
3. Type: Metal bellows.
4. Size: ASSE 1010, Sizes AA and A through F, or PDI-WH 201, Sizes A through F.

2.6 FLEXIBLE CONNECTORS

A Manufacturers: Subject to compliance with requirements, provide products by one of the following:
1. Hyspan Precision Products, Inc.
2. Metraflex, Inc.

B. Bronze-Hose Flexible Connectors: Corrugated-bronze tubing with bronze wire-braid covering and ends brazed to inner tubing.
1. Working-Pressure Rating: Minimum 200 psig.
2. End Connections NPS 2 and Smaller: Threaded copper pipe or plain-end copper tube.

C. Stainless-Steel-Hose Flexible Connectors: Corrugated-stainless-steel tubing with stainless-steel wire-braid covering and ends welded to inner tubing.
1. Working-Pressure Rating: Minimum 200 psig.
2. End Connections NPS 2 and Smaller: Threaded steel-pipe nipple.

PART 3 - EXECUTION

3.1 INSTALLATION

A. Install water-hammer arresters in water piping according to PDI-WH 201.

SANITARY WASTE PIPING SPECIALTIES - SECTION 15150

PART 1 - GENERAL

1.1 SUMMARY

A. Section Includes:
1. Cleanouts.
2. Floor drains.

1.2 CLOSEOUT SUBMITTALS

A. Operation and Maintenance Data: For drainage piping specialties to include in emergency, operation, and maintenance manuals.

1.3 QUALITY ASSURANCE

A. Drainage piping specialties shall bear label, stamp, or other markings of specified testing agency.

PART 2 - PRODUCTS

2.1 CLEANOUTS

A. Cast-Iron Floor Cleanouts:
1. Manufacturers: Subject to compliance with requirements, provide products by one of the following:
   a. Josam Company; Josam Div.
   b. Smith, Jay R. Mfg. Co.; Division of Smith Industries, Inc.
   c. Tyler Pipe; Wade Div.
   d. Wade Drains; McWane, Inc.
   e. Watts Drainage Products Inc.
2. Standard: ASME A112.36.2M for adjustable housing cleanout.
3. Size: Same as connected branch.
4. Type: Adjustable housing.
5. Body or Ferrule: Cast iron.
6. Closure: Brass plug with straight threads and gasket.
7. Adjustable Housing Material: Cast iron with threads.
8. Frame and Cover Material and Finish: Nickel-bronze, copper alloy.
9. Frame and Cover Shape: Round.
10. Top Loading Classification: Light Duty.
11. Riser: ASTM A 74, Service class, cast-iron drainage pipe fitting and riser to cleanout.

B. Cast-Iron Wall Cleanouts:
1. Manufacturers: Subject to compliance with requirements, provide products by one of the following:
   a. Josam Company; Josam Div.
   b. Smith, Jay R. Mfg. Co.; d of Smith Industries, Inc.
   c. Tyler Pipe; Wade Div.
   d. Wade Drains; McWane, Inc.
   e. Watts Drainage Products Inc.
2. Standard: ASME A112.36.2M. Include wall access.
3. Size: Same as connected drainage piping.
4. Body: Hubless, cast-iron soil pipe test tee as required to match connected piping.
5. Closure: Countersunk, drilled-and-threaded brass plug.
6. Closure Plug Size: Same as or not more than one size smaller than cleanout size.
7. Wall Access: Round, flat, chrome-plated brass or stainless-steel cover plate with screw.

2.2 FLOOR DRAINS

A. Cast-Iron Floor Drains:
1. Manufacturers: Subject to compliance with requirements, provide products by one of the following:
   a. Josam Company; Josam Div.
   b. Smith, Jay R. Mfg. Co.; Division of Smith Industries, Inc.
   c. Tyler Pipe; Wade Div.
   d. Wade Drains; McWane, Inc.
   e. Watts Drainage Products Inc.
2. Standard: ASME A112.6.3.
3. Pattern: Floor drain.
4. Body Material: Gray iron.
5. Outlet: Bottom.
6. Top Loading Classification: Light Duty.
7. Trap Material: Cast iron.

PART 3 - EXECUTION

3.1 INSTALLATION

A. Equipment Mounting: Install on cast-in-place concrete equipment base(s). Comply with requirements for equipment bases specified in Section 03 3053 "Miscellaneous Cast-in-Place Concrete."
1. Coordinate sizes and locations of concrete bases with actual equipment provided.
2. Construct bases to withstand, without damage to equipment, seismic force required by code.
3. Minimum Compressive Strength: 3500 psi at 28 days.
4. Install dowel rods to connect concrete base to concrete floor. Unless otherwise indicated, install dowel rods on 18-inch centers around the full perimeter of concrete base.
5. For supported equipment, install epoxy-coated anchor bolts that extend through concrete base, and anchor into structural concrete floor.
6. Place and secure anchorage devices. Use setting drawings, templates, diagrams, instructions, and directions furnished with items to be embedded.
7. Install anchor bolts to elevations required for proper attachment to supported equipment.

B. Install cleanouts in aboveground piping and building drain piping according to the following, unless otherwise indicated:
1. Size same as drainage piping up to NPS 4. Use NPS 4 for larger drainage piping unless larger cleanout is indicated.
2. Locate at each change in direction of piping greater than 45 degrees.
3. Locate at minimum intervals of 50 feet for piping NPS 4 and smaller and 100 feet for larger piping.
4. Locate at base of each vertical soil and waste stack.

C. For floor cleanouts for piping below floors, install cleanout deck plates with top flush with finished floor.

D. For cleanouts located in concealed piping, install cleanout wall access covers, of types indicated, with frame and cover flush with finished wall.

E. Install floor drains at low points of surface areas to be drained. Set grates of drains flush with finished floor, unless otherwise indicated.
1. Position floor drains for easy access and maintenance.
2. Set floor drains below elevation of surrounding finished floor to allow floor drainage. Set with grates depressed according to the following drainage area radii:
   a. Radius, 30 Inches or Less: Equivalent to 1 percent slope, but not less than 1/4-inch total depression.
   b. Radius, 30 to 60 Inches: Equivalent to 1 percent slope.
   c. Radius, 60 Inches or Larger: Equivalent to 1 percent slope, but not greater than 1-inch total depression.
3. Install floor-drain flashing collar or flange so no leakage occurs between drain and adjoining flooring. Maintain integrity of waterproof membranes where penetrated.

3.2 CONNECTIONS

A. Comply with requirements in Section "Sanitary Waste and Vent Piping" for piping installation requirements. Drawings indicate general arrangement of piping, fittings, and specialties.

B. Install piping adjacent to equipment to allow service and maintenance.

3.3 LABELING AND IDENTIFYING

A. Distinguish among multiple units, inform operator of operational requirements, indicate safety and emergency precautions, and warn of hazards and improper operations, in addition to identifying unit. Nameplates and signs are specified in Section "Identification for Plumbing Piping and Equipment."

3.4 PROTECTION

A. Protect drains during remainder of construction period to avoid clogging with dirt or debris and to prevent damage from traffic or construction work.

B. Place plugs in ends of uncompleted piping at end of each day or when work stops.

ALLEN CONSULTING INCORPORATED
ACI Project No. 126.22.1
CA2192 Expires: 6/30/2022
110 N. Mercedes Dr., Suite 100
Norman, Ok. 73069-6578
Ph.(405)447-2282, Fax(405)447-2284

PDG PLANNING DESIGN GROUP
LANDSCAPE ARCHITECTURE ● RECREATIONAL DESIGN ● LAND PLANNING
5314 S. YALE AVE., SUITE 710, TULSA, OK 74135
918.628.1255 918.628.1256 FAX
WWW.PLANNINGDESIGNGROUP.COM

gsb inc.
3555 NW 58TH Street
Suite 700-W
Oklahoma City, OK 73112
T: 405.848.9549
F: 405.848.9783
www.gsb-inc.com

Copyright ©2022 GSB, Inc

LICENSED PROFESSIONAL ENGINEER Heath Q. McKee 23072 06/03/2022 OKLAHOMA

PROJECT INFORMATION

PROJECT ADDRESS:

1001 E. ROBINSON ST.,
NORMAN, OKLAHOMA 73071

PROJECT NO.	171511A
DATE	06/03/22
DRAWN BY	CHECKED BY

GRIFFIN SOCCER COMPLEX
PHASE 6
NORMAN, OKLAHOMA

ISSUE/ REVISIONS

NO.	DATE	DESCRIPTION

OWNER:
THE CITY OF NORMAN PARKS & RECREATION
201-C WEST GRAY
NORMAN, OK 73069
(405) 366-5472

BID SET

MECHANICAL SPECIFICATIONS

M5.00C

GENERAL PROVISIONS MECHANICAL - SECTION 15000

PART 1 - GENERAL

1.01 Description

A. This contractor shall furnish, deliver, erect, and connect complete all the materials and appliances described herein and also all the materials, appliances, tools and transportation, etc., required to make the work complete in accordance with the true intent of the plans and specifications, and as required to leave the system in first-class operating condition, excluding those items stated as work and materials by others.

1.02 Codes, Standards, & Specifications

A. Codes: The basis for the design of this system was the 2015 International Building Code (IBC). In specific, the 2015 International Plumbing Code, 2015 International Mechanical Code, and 2015 International Fire Code were used.

B. Ordinances and Codes: The contractor shall comply fully with all existing and current ordinances, laws and regulations of the city, county, state and national governments, and local utilities, which are applicable to the materials, labor and work under this contract. He shall at all time observe and comply with such regulations and shall protect and indemnify the owner against any claims or liability arising from or based on any violation of it.

C. In case the specifications or plans conflict with such ordinances, laws or regulations, the conflicting portion of work affected shall be installed in strict accordance with the regulations above mentioned; the remainder of the plans and specifications, however, shall remain in full force. In no case will work or materials inferior to these specifications be accepted even if permitted by code. In places where codes conflict, the local code shall have preference.

1.03 Product Handling and Storage

A. Scheduling: This contractor shall be responsible for the proper scheduling, for delivery of his materials, equipment, and etc., to minimize the possibilities of damage or theft.

B. Storage: This contractor shall be responsible for the proper care of all his materials, equipment, etc., delivered at the site. Building materials, contractor's equipment, etc., may be stored on the premises, but the placing of it shall not interfere with the progress of work by other trades and is subject to approval of the architect/general contractor. When any room in the building is used as a shop, storeroom, etc., the one making use of such room will be held responsible for any repairs, patching, or cleaning arising from such use.

C. Damage: This contractor shall protect and be responsible for any damage to his work or material, from the date of agreement until the final acceptance is made, and shall make good without cost to the owner, any damage or loss that may occur during this period. Contractor shall handle all material as directed, so that it may be inspected by the architect/engineer. Should any material be found defective or in any way contrary to the contract, this material, no matter in what stage of completion, may be rejected by the architect, and must be removed from the premises at once.

1.04 Warranty

A. The contractor shall deliver to the owner, via architect, all warranties on all equipment, which are for a longer period than one year.

B. Guarantee: The contractor shall guarantee the apparatus as installed by him to develop the performance as specified and shall guarantee to keep the entire system as installed by him or his subcontractors in repair and perfect working order for one year after date of substantial completion of the project as determined by the architect. The contractor shall furnish free of cost to the owner all materials, labor, and other expenses necessary to comply with the above guarantee.

PART 2 - PRODUCTS

2.01 Scope

A. This contractor shall furnish all products called for or required, whether specifically mentioned or not, for proper and successful operation of the systems. The products shall be new and a standard catalog item of the manufacturer.

2.02 Materials

A. All materials furnished shall be new and a standard catalog product of the manufacturer. Experimental or unproven designs will not be considered.

PART 3 - EXECUTION

3.01 Visit Site

A. This contractor shall visit the site of this building before submitting a proposal on this work, and shall thoroughly familiarize himself with the existing conditions. Failure on his part to do this will not be cause for extras after the contract is signed, by reason of unforeseen conditions.

3.02 Permits

A. All necessary licenses or permits for the carrying out of this work must be secured and paid for by the contractor. The contractor shall be responsible for any damage sustained due to his failure to secure such licenses or permits. This contractor shall pay all taxes applicable to his work or materials.

3.03 Plans & Specifications

A. The specifications and drawings have been made to form the basis for the installation of this contractor's work. The plans and specifications shall be considered as mutually explanatory, and any work required by one, but not by the other shall be performed as though required by both. The plans and specifications are presumed to be accurate but extreme accuracy is not guaranteed. Any errors or ambiguities in the plans and/or specifications that are discovered by the contractor shall be reported to the architect/engineer before work is started. Omission of particular reference to any item necessary for complete installation and proper operation thereof shall not relieve the contractor of the responsibility of furnishing the same at no extra cost. In case of a dispute concerning the true intent and meaning of these plans and specifications, the architect/engineer shall interpret the same, and their interpretation shall be accepted by the contractor as final. Changes from the drawings to make the work conform to the structure and to fit the work of other trades shall be submitted to the architect/engineer for their approval before any deviations are made.

3.04 Cooperation

A. This contractor is cautioned to examine all drawings and specifications relating to all other branches of the work, and he shall make proper provisions to receive all other work. This contractor shall cooperate fully with all other trades on the work. If any part of this contractor's work depends, for proper execution or results upon the work of any other contractor, this contractor shall inspect and promptly report to the architect/general contractor any defects in such work that render it unsuitable for such execution and results. To insure against delaying any other contractor, this contractor shall install immediately any of his work necessary at the time for continuous construction operations, and shall be held responsible for any delays caused due to his negligence. This contractor shall at all times keep in close contact with the project so that all work will proceed without delay.

3.05 Workmanship

A. All work done by this contractor or his subcontractor shall be according to the best practices of the industry. Any work deemed unsatisfactory by the architect/engineer shall be replaced at the contractor's expense.

3.06 Clean Up

A. No waste material or rubbish resulting from this work shall be allowed to accumulate on or about the premises but shall be promptly removed at this contractor's expense.

B. All areas and equipment affected by the work of this contractor shall be left in a clean, orderly state after completion of the project.

GENERAL PLUMBING - SECTION 15001

PART 1 - GENERAL

1.01 Description

A. This contractor shall furnish all labor, materials and equipment required for the complete installation of the plumbing systems as per drawing and/or specification. Specific attention shall be directed to mechanical equipment. Plumbing Contractor shall be responsible for checking heating, air conditioning, and ventilating contractors equipment to insure that all equipment is installed properly with drains, condensate drains, gas piping, flue vents from all plumbing and HVAC gas-fired equipment, and other items as necessary for a complete system.

B. Where water and waste are supplied to a cabinet, a sink must be installed, unless identified as rough-in only. If the fixture is not identified with a P-number, contact the Owners Representative for clarification before bidding. If this is not done a sink of the Owners Representative's choosing will be installed at no additional cost to the Owner.

PART 2 - EXECUTION

2.01 Standards

A. The work to be performed as a part of this contract shall be done by experienced craftsmen in a neat, careful, and workmanlike manner.

B. Cutting, Patching, Openings, Bucks, Sleeves: Cutting, patching, hangers, foundations, openings and bucks, in connection with the installation of this work, shall be accomplished by this contractor, including cutting and patching of concrete, brick, paving, curbs, etc., unless otherwise indicated.

C. Plumbing Vents: All plumbing fixtures shall be independently trapped and individually vented; however, a common vent riser may be installed. Traps shall be placed as close to the fixture as possible, and the vent concealed not more than 24" from that trap. Vent risers shall extend to not less than 10" above the roof. Lead flashing shall be extended up and turned into the top of the pipe to make a weathertight jointing with roof and pipe.

D. Cleanouts: Shall be provided at the ends and at points of change of direction of all drain, soil and waste pipes and branches thereof, at the foot of stacks, at offsets, in horizontal runs at approximately 50' intervals, and at other points where indicated on the plans or where required by the applicable Plumbing Code.

E. Cross Connections: There shall be no cross connections of any type between any water systems and drainage systems. Supplies to water closets, or any other item with inlet below fixture overflow line, shall be provided with back siphonage protection of a positive type.

F. Stop Valves: Supplies for plumbing fixtures shall be furnished with stop valves and air chambers. Air chambers to be the same size as supply, 12" long and concealed. Air chambers on down feed fixtures shall be arranged so they can be drained.

D. Isolation Valves: In general, the location of the principal valves are shown on the plans. In addition to these valves, however, the following shall apply. It is intended that valves be furnished for all supply mains at their source and at branches serving two or more units. All such valves shall be arranged within easy reach or access and if covered by hard surface shall have an access door. Install ball valves on supplies to all plumbing fixtures that are not equipped with stops as part of the fixture trim. Valves shall be type specified or an approved substitution.

E. Fire Stops: Where pipes pass through floor or walls, fill void around pipe with approved fire-resistant rated foam to fill all voids applied in accordance with manufacturer's instructions to achieve required fire rating.

2.02 Plumbing Fixtures

A. See Plumbing Fixture Schedule on the drawings for utility connections, manufacturers and model numbers.

B. All P-traps and tailpieces shall be 17 ga. chrome plated brass. P-trap shall be furnished with bottom cleanout plug. Escutcheons shall be furnished at wall penetrations to completely cover the opening.

C. Water supplies shall be furnished with 1/2" I.P.S. fitting by 3/8" compression, loose key stops. Water supply shall be furnished with a 1/2" male I.P.S. fitting for connection purposes. Care shall be taken to maintain this in close proximity to the wall finish. All water supplies shall be chrome plated brass with stop valve. Escutcheons shall be furnished at wall penetrations to completely cover the opening.

PIPE AND PIPE FITTINGS - SECTION 15140

PART 1 - GENERAL

1.01 Scope

A. This contractor shall furnish all labor and materials, equipment and services necessary for and reasonably incidental to the furnishing and complete installation of all water systems, waste and vent systems, shown on the drawings and/or as herein specified.

PART 2 - PRODUCTS

2.01 Materials

A. Sanitary Waste and Vents and Storm Drainage Lines (Cast Iron):

1. Piping below grade: All waste, vent, sewer and storm lines shall be of cast iron soil pipe and fittings and shall conform to the requirements of CISPI Standard 301 (latest edition), ASTM A888 (latest edition), or ASTM A 74 (latest edition) for all pipe and fittings. Pipe and fitting shall be marked with the collective trademark of the Cast Iron Soil Pipe Institute. Approved manufacturers shall be Charlotte Foundry, Inc., Tyler Pipe, Inc., and American Brass & Iron, Inc. (AB&I).

   a. Joints: Joints for hub and spigot pipe shall be installed with compression gaskets conforming to the requirements of ASTM Standard C 564 (latest edition).

2. Waste lines above grade: All waste, vent, sewer and storm lines shall be cast iron soil pipe and fittings and shall conform to the requirements of CISPI Standard 301 (latest edition), ASTM A888 (latest edition), or ASTM A 74 (latest edition) for all pipe and fittings. Pipe and fitting shall be marked with the collective trademark of the Cast Iron Soil Pipe Institute. Approved manufacturers shall be Charlotte Foundry, Inc., Tyler Pipe, Inc., and American Brass & Iron, Inc. (AB&I).

   a. Joints: Joints for hubless pipe and fittings shall conform to the manufacturer's installation instructions, the CISPI Standard 310 (latest edition) and local code requirements. Hubless coupling gaskets shall conform to ASTM Standard C 564 (latest edition).

B. Domestic cold water, hot water, and hot water return:

1. Piping underground: Shall be Type "K" hard copper pipe with wrought copper fittings and #6 cadmium-free silver solder joints, or Type "K" soft copper pipe with bends in piping and no copper fittings or joints under slabs. Piping 3 inches and larger shall be water-service weight cast iron with approved mechanical joint, and shall have bolted anchor rods to next joint at all changes in direction. Provide a shut-off valve and valve box for the water service at the building entrance.

2. Piping above ground: Shall be Type "L" hard copper with wrought copper fittings and lead-free solder joints. Provide a shut-off valve for the water service at the building entrance just above the slab.

3. All exposed piping to plumbing fixtures, kitchen equipment, etc., shall be chrome plated brass.

4. All water lines shall be tested and sterilized before final acceptance.

2.02 Pipe And Fittings

A. Pipe and fittings shall have working pressure ratings suitable for the operating pressures to which they may be subjected. Provide pipe escutcheons on both bare and insulated pipe passing through building construction.

2.03 Pipe Hangers and Supports

A. General: All support components shall conform to Manufacturer's Standardization Society Specification SP-58. Threaded hot rolled carbon steel rod shall conform to ASTM A-107.

B. Installation-Horizontal Piping: Hangers shall adequately support the piping system, located near or at changes in piping direction and concentrated loads, and shall provide vertical adjustment to maintain pitch required for proper drainage. Hangers shall allow for expansion and contraction of the piping, and fastened to building structural members where practical.

C. Vertical Piping: All vertical piping shall be supported at every floor.

D. Support all valves and heavy components independently.

E. Insulated Pipe Supports:

1. Insulated pipe supports shall be supplied and installed by the Mechanical Contractor on all insulated pipe and tubing.

2.05 PART 3 - EXECUTION

3.01 Installation

A. All piping shall be installed in a neat professional like manner. Any piping judged poorly installed by the Owner's Representative shall be replaced by the Contractor at no additional expense to the Owner.

B. "Lead-Free" solder shall be used for all water distribution systems. This is required to comply with the Lead Contamination Control Act.

3.02 Sterilization And Flushing Of Water Piping

A. Upon completion of installation of all domestic water piping, the system shall be thoroughly flushed out and then sterilized by introducing chlorine or a solution of calcium hypochlorite mixture. Fill piping with hot water, slowly applying sterilizing agent proportionately at a rate giving 200 ppm of chlorine. After lines have been thus filled for at least three hours, flush and fill at a rate giving 50 ppm of chlorine for 24 hours. Then test for residual chlorine at extremities of line. If less than 5 ppm is indicated, drain system and repeat sterilization treatment. When tests show at least 5 ppm of residual chlorine, flush out system until all traces of the chemical used are removed.

B. Upon completion of installation of all other water piping, the system shall be thoroughly flushed. This procedure shall be done until all debris, flux, shavings, etc. are completely out of the system. This shall be accomplished prior to installing the control valves on all chilled water, heating hot water, steam lines, and steam condensate return lines. This may require a temporary bypass at each unit.

3.04 Painting of Piping

A. All piping exposed to sight, both interior and exterior, shall be prepared for painting by removing all rust with a wire brush. Then all piping shall be painted with a primer and a finish coat of epoxy paint to match the surrounding environment. The paint samples shall be submitted to the Architect and he shall select the colors.

3.05 Testing and Adjusting

A. The Mechanical Contractor shall test and adjust the various mechanical systems on this job to give the required performance. Pipe work must be properly tested by the Mechanical Contractor and approved by the Architect before being covered up or enclosed by building construction. This contractor will be held responsible, and be required to pay for any damage or expense due to leaks or broken connection that may prove to exist before and after such work is concealed.

1. Waste and vent lines shall be temporarily plugged and filled with water to the roof level, and allowed to remain so for 24 hours without leakage.

2. Domestic hot and cold water, domesitc chilled awater lines shall be made tight without dope or caulking, and shall be tested at 125 lbs. for a period of 12 hours after roughing-in has been complete, without leaking.

DOMESTIC WATER PIPING SPECIALTIES - SECTION 15415

PART 1 - GENERAL

1.1 SUMMARY

A. Section Includes:
   1. Water-hammer arresters.
   2. Trap-seal primer valves.

1.2 ACTION SUBMITTALS

A. Product Data: For each type of product.

1.3 CLOSEOUT SUBMITTALS

A. Operation and Maintenance Data: For domestic water piping specialties to include in emergency, operation, and maintenance manuals.

PART 2 - PRODUCTS

2.1 GENERAL REQUIREMENTS FOR PIPING SPECIALTIES

A. Potable-water piping and components shall comply with NSF 61.

2.2 PERFORMANCE REQUIREMENTS

A. Minimum Working Pressure for Domestic Water Piping Specialties: 125 psig unless otherwise indicated.

2.3 WATER-HAMMER ARRESTERS

A. Water-Hammer Arresters:
   6. Manufacturers: Subject to compliance with requirements, provide products by one of the following:
      b. Precision Plumbing Products, Inc.
      c. Smith, Jay R. Mfg. Co.; Division of Smith Industries, Inc.
      d. Tyler Pipe; Wade Div.
      e. Zurn Industries, LLC; Plumbing Products Group; Specification Drainage Products.
   2. Standard: ASSE 1010 or PDI-WH 201.
   3. Type: Metal bellows.
   4. Size: ASSE 1010, Sizes AA and A through F, or PDI-WH 201, Sizes A through F.

2.6 FLEXIBLE CONNECTORS

A Manufacturers: Subject to compliance with requirements, provide products by one of the following:
   1. Hyspan Precision Products, Inc.
   2. Metraflex, Inc.

B. Bronze-Hose Flexible Connectors: Corrugated-bronze tubing with bronze wire-braid covering and ends brazed to inner tubing.
   1. Working-Pressure Rating: Minimum 200 psig.
   2. End Connections NPS 2 and Smaller: Threaded copper pipe or plain-end copper tube.

C. Stainless-Steel-Hose Flexible Connectors: Corrugated-stainless-steel tubing with stainless-steel wire-braid covering and ends welded to inner tubing.
   1. Working-Pressure Rating: Minimum 200 psig.
   2. End Connections NPS 2 and Smaller: Threaded steel-pipe nipple.

PART 3 - EXECUTION

3.1 INSTALLATION

A. Install water-hammer arresters in water piping according to PDI-WH 201.

SANITARY WASTE PIPING SPECIALTIES - SECTION 15150

PART 1 - GENERAL

1.1 SUMMARY

A. Section Includes:
   1. Cleanouts.
   2. Floor drains.

1.2 CLOSEOUT SUBMITTALS

A. Operation and Maintenance Data: For drainage piping specialties to include in emergency, operation, and maintenance manuals.

1.3 QUALITY ASSURANCE

A. Drainage piping specialties shall bear label, stamp, or other markings of specified testing agency.

PART 2 - PRODUCTS

2.1 CLEANOUTS

A. Cast-Iron Floor Cleanouts:
   1. Manufacturers: Subject to compliance with requirements, provide products by one of the following:
      a. Josam Company; Josam Div.
      b. Smith, Jay R. Mfg. Co.; Division of Smith Industries, Inc.
      c. Tyler Pipe; Wade Div.
      d. Wade Drains; McWane, Inc.
      e. Watts Drainage Products Inc.
   2. Standard: ASME A112.36.2M for adjustable housing cleanout.
   3. Size: Same as connected branch.
   4. Type: Adjustable housing.
   5. Body or Ferrule: Cast iron.
   6. Closure: Brass plug with straight threads and gasket.
   7. Adjustable Housing Material: Cast iron with threads.
   8. Frame and Cover Material and Finish: Nickel-bronze, copper alloy.
   9. Frame and Cover Shape: Round.
   10. Top Loading Classification: Light Duty.
   11. Riser: ASTM A 74, Service class, cast-iron drainage pipe fitting and riser to cleanout.

B. Cast-Iron Wall Cleanouts:
   1. Manufacturers: Subject to compliance with requirements, provide products by one of the following:
      a. Josam Company; Josam Div.
      b. Smith, Jay R. Mfg. Co.; d of Smith Industries, Inc.
      c. Tyler Pipe; Wade Div.
      d. Wade Drains; McWane, Inc.
      e. Watts Drainage Products Inc.
   2. Standard: ASME A112.36.2M. Include wall access.
   3. Size: Same as connected drainage piping.
   4. Body: Hubless, cast-iron soil pipe test tee as required to match connected piping.
   5. Closure: Countersunk, drilled-and-threaded brass plug.
   6. Closure Plug Size: Same as or not more than one size smaller than cleanout size.
   7. Wall Access: Round, flat, chrome-plated brass or stainless-steel cover plate with screw.

2.2 FLOOR DRAINS

A. Cast-Iron Floor Drains:
   1. Manufacturers: Subject to compliance with requirements, provide products by one of the following:
      a. Josam Company; Josam Div.
      b. Smith, Jay R. Mfg. Co.; Division of Smith Industries, Inc.
      c. Tyler Pipe; Wade Div.
      d. Wade Drains; McWane, Inc.
      e. Watts Drainage Products Inc.
   2. Standard: ASME A112.6.3.
   3. Pattern: Floor drain.
   4. Body Material: Gray iron.
   5. Outlet: Bottom.
   6. Top Loading Classification: Light Duty.
   7. Trap Material: Cast iron.

PART 3 - EXECUTION

3.1 INSTALLATION

A. Equipment Mounting: Install on cast-in-place concrete equipment base(s). Comply with requirements for equipment bases specified in Section 03 3053 "Miscellaneous Cast-in-Place Concrete."
   1. Coordinate sizes and locations of concrete bases with actual equipment provided.
   2. Construct bases to withstand, without damage to equipment, seismic force required by code.
   3. Minimum Compressive Strength: 3500 psi at 28 days.
   4. Install dowel rods to connect concrete base to concrete floor. Unless otherwise indicated, install dowel rods on 18-inch centers around the full perimeter of concrete base.
   5. For supported equipment, install epoxy-coated anchor bolts that extend through concrete base, and anchor into structural concrete floor.
   6. Place and secure anchorage devices. Use setting drawings, templates, diagrams, instructions, and directions furnished with items to be embedded.
   7. Install anchor bolts to elevations required for proper attachment to supported equipment.

B. Install cleanouts in aboveground piping and building drain piping according to the following, unless otherwise indicated:
   1. Size same as drainage piping up to NPS 4. Use NPS 4 for larger drainage piping unless larger cleanout is indicated.
   2. Locate at each change in direction of piping greater than 45 degrees.
   3. Locate at minimum intervals of 50 feet for piping NPS 4 and smaller and 100 feet for larger piping.
   4. Locate at base of each vertical soil and waste stack.

C. For floor cleanouts for piping below floors, install cleanout deck plates with top flush with finished floor.

D. For cleanouts located in concealed piping, install cleanout wall access covers, of types indicated, with frame and cover flush with finished wall.

E. Install floor drains at low points of surface areas to be drained. Set grates of drains flush with finished floor, unless otherwise indicated.
   1. Position floor drains for easy access and maintenance.
   2. Set floor drains below elevation of surrounding finished floor to allow floor drainage. Set with grates depressed according to the following drainage area radii:
      a. Radius, 30 Inches or Less: Equivalent to 1 percent slope, but not less than 1/4-inch total depression.
      b. Radius, 30 to 60 Inches: Equivalent to 1 percent slope.
      c. Radius, 60 Inches or Larger: Equivalent to 1 percent slope, but not greater than 1-inch total depression.
   3. Install floor-drain flashing collar or flange so no leakage occurs between drain and adjoining flooring. Maintain integrity of waterproof membranes where penetrated.

3.2 CONNECTIONS

A. Comply with requirements in Section "Sanitary Waste and Vent Piping" for piping installation requirements. Drawings indicate general arrangement of piping, fittings, and specialties.

B. Install piping adjacent to equipment to allow service and maintenance.

3.3 LABELING AND IDENTIFYING

A. Distinguish among multiple units, inform operator of operational requirements, indicate safety and emergency precautions, and warn of hazards and improper operations, in addition to identifying unit. Nameplates and signs are specified in Section "Identification for Plumbing Piping and Equipment."

3.4 PROTECTION

A. Protect drains during remainder of construction period to avoid clogging with dirt or debris and to prevent damage from traffic or construction work.

B. Place plugs in ends of uncompleted piping at end of each day or when work stops.

ALLEN CONSULTING INCORPORATED
ACI Project No. 126.22.2
CA2192 Expires: 6/30/2022
110 N. Mercedes Dr., Suite 100
Norman, Ok 73069-6578
Ph.(405)447-2282, Fax(405)447-2284

BID SET

PDG
PLANNING DESIGN GROUP
LANDSCAPE ARCHITECTURE ● RECREATIONAL DESIGN ● LAND PLANNING
5314 S. YALE AVE., SUITE 710, TULSA, OK 74135
918.628.1255 918.628.1256 FAX
WWW.PLANNINGDESIGNGROUP.COM

gsb inc
3555 NW 58TH Street
Suite 700-W
Oklahoma City, OK 73112
T: 405.848.9549
F: 405.848.9783
www.gsb-inc.com

Copyright ©2022 GSB, Inc

LICENSED PROFESSIONAL ENGINEER Heath Q. McKee 23072 06/03/2022 OKLAHOMA

PROJECT INFORMATION

PROJECT ADDRESS:

1001 E. ROBINSON ST.,
NORMAN, OKLAHOMA 73071

PROJECT NO.	171511A
DATE	06/03/22
DRAWN BY	CHECKED BY

GRIFFIN SOCCER COMPLEX
PHASE 6
NORMAN, OKLAHOMA

ISSUE/ REVISIONS

NO.	DATE	DESCRIPTION

OWNER:
THE CITY OF NORMAN PARKS & RECREATION
201-C WEST GRAY
NORMAN, OK 73069
(405) 366-5472

MECHANICAL SPECIFICATIONS

M5.00R

GENERAL PROVISIONS MECHANICAL – SECTION 15000

PART 1 – GENERAL

1.01 DESCRIPTION

A. THIS CONTRACTOR SHALL FURNISH, DELIVER, ERECT, AND CONNECT COMPLETE ALL THE MATERIALS AND APPLIANCES DESCRIBED HEREIN AND ALSO ALL THE MATERIALS, APPLIANCES, TOOLS AND TRANSPORTATION, ETC., REQUIRED TO MAKE THE WORK COMPLETE IN ACCORDANCE WITH THE TRUE INTENT OF THE PLANS AND SPECIFICATIONS, AND AS REQUIRED TO LEAVE THE SYSTEM IN FIRST–CLASS OPERATING CONDITION, EXCLUDING THOSE ITEMS STATED AS WORK AND MATERIALS BY OTHERS.

1.02 RELATED WORK SPECIFIED IN OTHER SECTIONS

A. THE GENERAL REQUIREMENTS DIVISION 1 APPLYING TO THE GENERAL CONTRACTOR ALSO APPLIES TO THESE SUBCONTRACTORS.

1.03 CODES, STANDARDS, & SPECIFICATIONS

A. CODES: THE BASIS FOR THE DESIGN OF THIS SYSTEM WAS THE 2015 INTERNATIONAL BUILDING CODE (IBC). IN SPECIFIC, THE 2015 INTERNATIONAL PLUMBING CODE, 2015 INTERNATIONAL MECHANICAL CODE, AND 2015 INTERNATIONAL FIRE CODE WERE USED.

B. ORDINANCES AND CODES: THE CONTRACTOR SHALL COMPLY FULLY WITH ALL EXISTING AND CURRENT ORDINANCES, LAWS AND REGULATIONS OF THE CITY, COUNTY, STATE AND NATIONAL GOVERNMENTS, AND LOCAL UTILITIES, WHICH ARE APPLICABLE TO THE MATERIALS, LABOR AND WORK UNDER THIS CONTRACT. HE SHALL AT ALL TIME OBSERVE AND COMPLY WITH SUCH REGULATIONS AND SHALL PROTECT AND INDEMNIFY THE OWNER AGAINST ANY CLAIMS OR LIABILITY ARISING FROM OR BASED ON ANY VIOLATION OF IT.

C. IN CASE THE SPECIFICATIONS OR PLANS CONFLICT WITH SUCH ORDINANCES, LAWS OR REGULATIONS, THE CONFLICTING PORTION OF WORK AFFECTED SHALL BE INSTALLED IN STRICT ACCORDANCE WITH THE REGULATIONS ABOVE MENTIONED; THE REMAINDER OF THE PLANS AND SPECIFICATIONS, HOWEVER, SHALL REMAIN IN FULL FORCE. IN NO CASE WILL WORK OR MATERIALS INFERIOR TO THESE SPECIFICATIONS BE ACCEPTED EVEN IF PERMITTED BY CODE. IN PLACES WHERE CODES CONFLICT, THE LOCAL CODE SHALL HAVE PREFERENCE.

1.04 PRODUCT HANDLING AND STORAGE

A. SCHEDULING: THIS CONTRACTOR SHALL BE RESPONSIBLE FOR THE PROPER SCHEDULING, FOR DELIVERY OF HIS MATERIALS, EQUIPMENT, AND ETC., TO MINIMIZE THE POSSIBILITIES OF DAMAGE OR THEFT.

B. STORAGE: THIS CONTRACTOR SHALL BE RESPONSIBLE FOR THE PROPER CARE OF ALL HIS MATERIALS, EQUIPMENT, ETC., DELIVERED AT THE SITE. BUILDING MATERIALS, CONTRACTOR'S EQUIPMENT, ETC., MAY BE STORED ON THE PREMISES, BUT THE PLACING OF IT SHALL NOT INTERFERE WITH THE PROGRESS OF WORK BY OTHER TRADES AND IS SUBJECT TO APPROVAL OF THE ARCHITECT/GENERAL CONTRACTOR. WHEN ANY ROOM IN THE BUILDING IS USED AS A SHOP, STOREROOM, ETC., THE ONE MAKING USE OF SUCH ROOM WILL BE HELD RESPONSIBLE FOR ANY REPAIRS, PATCHING, OR CLEANING ARISING FROM SUCH USE.

C. DAMAGE: THIS CONTRACTOR SHALL PROTECT AND BE RESPONSIBLE FOR ANY DAMAGE TO HIS WORK OR MATERIAL, FROM THE DATE OF AGREEMENT UNTIL THE FINAL ACCEPTANCE IS MADE, AND SHALL MAKE GOOD WITHOUT COST TO THE OWNER, ANY DAMAGE OR LOSS THAT MAY OCCUR DURING THIS PERIOD. CONTRACTOR SHALL HANDLE ALL MATERIAL AS DIRECTED, SO THAT IT MAY BE INSPECTED BY THE ARCHITECT/ENGINEER. SHOULD ANY MATERIAL BE FOUND DEFECTIVE OR IN ANY WAY CONTRARY TO THE CONTRACT, THIS MATERIAL, NO MATTER IN WHAT STAGE OF COMPLETION, MAY BE REJECTED BY THE ARCHITECT, AND MUST BE REMOVED FROM THE PREMISES AT ONCE.

1.05 WARRANTY

A. THE CONTRACTOR SHALL DELIVER TO THE OWNER, VIA ARCHITECT, ALL WARRANTIES ON ALL EQUIPMENT, WHICH ARE FOR A LONGER PERIOD THAN ONE YEAR.

B. GUARANTEE: THE CONTRACTOR SHALL GUARANTEE THE APPARATUS AS INSTALLED BY HIM TO DEVELOP THE PERFORMANCE AS SPECIFIED AND SHALL GUARANTEE TO KEEP THE ENTIRE SYSTEM AS INSTALLED BY HIM OR HIS SUBCONTRACTORS IN REPAIR AND PERFECT WORKING ORDER FOR ONE YEAR AFTER DATE OF SUBSTANTIAL COMPLETION OF THE PROJECT AS DETERMINED BY THE ARCHITECT. THE CONTRACTOR SHALL FURNISH FREE OF COST TO THE OWNER ALL MATERIALS, LABOR, AND OTHER EXPENSES NECESSARY TO COMPLY WITH THE ABOVE GUARANTEE.

PART 2 – PRODUCTS

2.01 SCOPE

A. THIS CONTRACTOR SHALL FURNISH ALL PRODUCTS CALLED FOR OR REQUIRED, WHETHER SPECIFICALLY MENTIONED OR NOT, FOR PROPER AND SUCCESSFUL OPERATION OF THE SYSTEMS. THE PRODUCTS SHALL BE NEW AND A STANDARD CATALOG ITEM OF THE MANUFACTURER.

2.02 MATERIALS

A. ALL MATERIALS FURNISHED SHALL BE NEW AND A STANDARD CATALOG PRODUCT OF THE MANUFACTURER. EXPERIMENTAL OR UNPROVEN DESIGNS WILL NOT BE CONSIDERED.

PART 3 – EXECUTION

3.01 VISIT SITE

A. THIS CONTRACTOR SHALL VISIT THE SITE OF THIS BUILDING BEFORE SUBMITTING A PROPOSAL ON THIS WORK, AND SHALL THOROUGHLY FAMILIARIZE HIMSELF WITH THE EXISTING CONDITIONS. FAILURE ON HIS PART TO DO THIS WILL NOT BE CAUSE FOR EXTRAS AFTER THE CONTRACT IS SIGNED, BY REASON OF UNFORESEEN CONDITIONS.

3.02 PERMITS

A. ALL NECESSARY LICENSES OR PERMITS FOR THE CARRYING OUT OF THIS WORK MUST BE SECURED AND PAID FOR BY THE CONTRACTOR. THE CONTRACTOR SHALL BE RESPONSIBLE FOR ANY DAMAGE SUSTAINED DUE TO HIS FAILURE TO SECURE SUCH LICENSES OR PERMITS. THIS CONTRACTOR SHALL PAY ALL TAXES APPLICABLE TO HIS WORK OR MATERIALS.

3.03 PLANS & SPECIFICATIONS

A. THE SPECIFICATIONS AND DRAWINGS HAVE BEEN MADE TO FORM THE BASIS FOR THE INSTALLATION OF THIS CONTRACTOR'S WORK. THE PLANS AND SPECIFICATIONS SHALL BE CONSIDERED AS MUTUALLY EXPLANATORY, AND ANY WORK REQUIRED BY ONE, BUT NOT BY THE OTHER SHALL BE PERFORMED AS THOUGH REQUIRED BY BOTH. THE PLANS AND SPECIFICATIONS ARE PRESUMED TO BE ACCURATE BUT EXTREME ACCURACY IS NOT GUARANTEED. ANY ERRORS OR AMBIGUITIES IN THE PLANS AND/OR SPECIFICATIONS THAT ARE DISCOVERED BY THE CONTRACTOR SHALL BE REPORTED TO THE ARCHITECT/ENGINEER BEFORE WORK IS STARTED. OMISSION OF PARTICULAR REFERENCE TO ANY ITEM NECESSARY FOR COMPLETE INSTALLATION AND PROPER OPERATION THEREOF SHALL NOT RELIEVE THE CONTRACTOR OF THE RESPONSIBILITY OF FURNISHING THE SAME AT NO EXTRA COST. IN CASE OF A DISPUTE CONCERNING THE TRUE INTENT AND MEANING OF THESE PLANS AND SPECIFICATIONS, THE ARCHITECT/ENGINEER SHALL INTERPRET THE SAME, AND THEIR INTERPRETATION SHALL BE ACCEPTED BY THE CONTRACTOR AS FINAL. CHANGES FROM THE DRAWINGS TO MAKE THE WORK CONFORM TO THE STRUCTURE AND TO FIT THE WORK OF OTHER TRADES SHALL BE SUBMITTED TO THE ARCHITECT/ENGINEER FOR THEIR APPROVAL BEFORE ANY DEVIATIONS ARE MADE.

3.04 COOPERATION

A. THIS CONTRACTOR IS CAUTIONED TO EXAMINE ALL DRAWINGS AND SPECIFICATIONS RELATING TO ALL OTHER BRANCHES OF THE WORK, AND HE SHALL MAKE PROPER PROVISIONS TO RECEIVE ALL OTHER WORK. THIS CONTRACTOR SHALL COOPERATE FULLY WITH ALL OTHER TRADES ON THE WORK. IF ANY PART OF THIS CONTRACTOR'S WORK DEPENDS, FOR PROPER EXECUTION OR RESULTS UPON THE WORK OF ANY OTHER CONTRACTOR, THIS CONTRACTOR SHALL INSPECT AND PROMPTLY REPORT TO THE ARCHITECT/GENERAL CONTRACTOR ANY DEFECTS IN SUCH WORK THAT RENDER IT UNSUITABLE FOR SUCH EXECUTION AND RESULTS. TO INSURE AGAINST DELAYING ANY OTHER CONTRACTOR, THIS CONTRACTOR SHALL INSTALL IMMEDIATELY ANY OF HIS WORK NECESSARY AT THE TIME FOR CONTINUOUS CONSTRUCTION OPERATIONS, AND SHALL BE HELD RESPONSIBLE FOR ANY DELAYS CAUSED DUE TO HIS NEGLIGENCE. THIS CONTRACTOR SHALL AT ALL TIMES KEEP IN CLOSE CONTACT WITH THE PROJECT SO THAT ALL WORK WILL PROCEED WITHOUT DELAY.

3.05 WORKMANSHIP

A. ALL WORK DONE BY THIS CONTRACTOR OR HIS SUBCONTRACTOR SHALL BE ACCORDING TO THE BEST PRACTICES OF THE INDUSTRY. ANY WORK DEEMED UNSATISFACTORY BY THE ARCHITECT/ENGINEER SHALL BE REPLACED AT THE CONTRACTOR'S EXPENSE.

3.06 CLEAN UP

A. NO WASTE MATERIAL OR RUBBISH RESULTING FROM THIS WORK SHALL BE ALLOWED TO ACCUMULATE ON OR ABOUT THE PREMISES BUT SHALL BE PROMPTLY REMOVED AT THIS CONTRACTOR'S EXPENSE.

B. ALL AREAS AND EQUIPMENT AFFECTED BY THE WORK OF THIS CONTRACTOR SHALL BE LEFT IN A CLEAN, ORDERLY STATE AFTER COMPLETION OF THE PROJECT.

ELECTRIC UNIT HEATERS – SECTION 15792

PART 1 –GENERAL

1.01 DESCRIPTION

A. THE EXTENT OF THE ELECTRIC UNIT HEATER WORK IS INDICATED BY THE DRAWINGS, SCHEDULES AND SPECIFICATIONS.

1.02 SCOPE

A. PROVIDE ALL MATERIALS, EQUIPMENT, TOOLS, RIGGING, AND PERFORM ALL LABOR REQUIRED TO INSTALL SYSTEMS COMPLETE AS INDICATED, AS REQUIRED BY APPLICABLE CODES, AND AS SPECIFIED. THE SYSTEMS SHALL BE TESTED, ADJUSTED AND READY FOR OPERATION BY OWNER'S PERSONNEL.

1.03 SUBMITTAL

A. SUBMIT MANUFACTURER'S CATALOG CUTS CLEARLY INDICATING MODEL NUMBER, PERFORMANCE DATA, DIVERSIONS, DRAWINGS, AND DIAGRAMS AS NECESSARY TO SHOW COMPLETE COMPLIANCE WITH SPECIFICATIONS.

1.04 WIRING

A. CONTROL AND INTERLOCK WIRING SHOWN ON THE ELECTRICAL DRAWINGS WILL BE PROVIDED UNDER DIVISION 16000 OF THE SPECIFICATIONS. ALL OTHER CONTROL AND INTERLOCK WIRING REQUIRED FOR MECHANICAL EQUIPMENT TO OPERATE PROPERLY SHALL BE PROVIDED UNDER THIS SECTION. WIRING SHALL CONFORM TO THE NATIONAL ELECTRICAL CODE.

B. DISCONNECT SWITCHES SHALL BE PROVIDED AND INSTALLED BY THE MANUFACTURER FOR ALL ELECTRIC HEATERS SPECIFIED HEREIN. THESE SWITCHES SHALL BE RATED FOR THE LOAD SPECIFIED ON THE DRAWINGS.

PART 2 – PRODUCTS

2.05 ELECTRIC HEAVY DUTY CEILING HEATERS, 2' X 2'

A. EACH UNIT SHALL BE CAPABLE OF MOUNTING ON THE CEILING. CEILING MOUNTED UNITS SHALL BE RECESSED AND SHALL BE PROVIDED WITH A RECESSED BOX AND ALL PLASTER TRIM IF NECESSARY. UNIT SHALL BE A MARKEL SERIES 3480 COMPLETE WITH ALL CONTROLS FOR REMOTE THERMOSTAT. COORDINATE WITH ELECTRICAL CONTRACTOR FOR WIRING.

B. MOUNTING BRACKET: RECESSED HEATER SHALL HAVE A JUNCTION BOX ATTACHED TO THE HEATER CAN.

C. ELEMENT: TOTALLY ENCLOSED AND CORROSION RESISTANT. MAXIMUM FINNING FOR LOWER OPERATING TEMPERATURES. SHALL NOT REQUIRE A FILTER AND NOT BECOME DUST CLOGGED.

D. MOTOR: HEAVY–DUTY UNIT BEARING, PERMANENTLY LUBRICATED, TOTALLY ENCLOSED, IMPEDANCE PROTECTED.

E. BLADE: HIGH EFFICIENT, SPACE–SAVING BLADE OVER MOTOR DESIGN, INDIVIDUALLY BALANCED.

F. THERMAL CUTOUT: PROVIDE "ZERO VOLTAGE RESET" TYPE FOR HIGHEST DEGREE OF EFFECTIVENESS IF NORMAL OPERATING TEMPERATURES ARE EXCEEDED. HEATER MUST BE MANUALLY SHUT OFF FOR FIVE MINUTES TO RESET.

G. AIR INTAKE AND DISCHARGE: DISCHARGE VENTURI SHALL BE OF BULLS–EYE DESIGN TO PERMIT HEATED AIR TO BE DISTRIBUTED IN A UNIFORM PATTERN. AIR INTAKE SHALL BE 1/4" SQUARE STEEL SLOTTED LOUVER ON FOUR SIDES TO PERMIT COMPLETE AIR SEPARATION FROM THE ABOVE DESCRIBED DISCHARGE VENTURI.

H. CONTROLS: PROVIDE WALL MOUNTED THERMOSTAT, 24 VOLT, FOR USE WITH REMOTE CONTACTORS, MARKEL A6176 AND LOCKING GUARD A6280. UNIT SHALL BE PROVIDED WITH NECESSARY CONTROL TRANSFORMER AND REMOTE CONTACTORS FOR PROPER OPERATION.

I. PROVIDE A FIVE YEAR WARRANTY ON THE HEATERS.

PART 3 – EXECUTION

3.01 INSTALLATION

A. SHALL CONFORM TO MANUFACTURER'S WRITTEN INSTRUCTIONS AND DETAILS SHOWN ON DRAWINGS.

3.02 TEST AND ADJUST

A. EQUIPMENT READY FOR OPERATION BY OWNER'S PERSONNEL.

3.03 MOTORS AND CONTROLS

A. MOTORS SHALL BE DESIGNED TO OPERATE ON CURRENT SPECIFIED AS SHOWN ON DRAWINGS. UNLESS OTHERWISE SHOWN, MOTORS 1/2 HP AND LARGER SHALL BE 3–PHASE, WHILE SMALLER MOTORS SHALL BE SINGLE PHASE. WHERE MOTORS ARE REQUIRED TO BE LARGER THAN THOSE INDICATED ON PLANS TO MAKE EQUIPMENT PERFORM ADEQUATELY, CONTRACTOR SHALL BE RESPONSIBLE FOR ANY INCREASE MADE NECESSARY IN CONDUCTORS, CONDUIT, SWITCHES, ETC., AND PAY EXTRA COST FOR SAME.

B. MOTOR STARTERS AND CONTROLLERS SHALL BE PROVIDED FOR ALL MOTORS SUPPLIED UNDER THIS SECTION, UNLESS SPECIFICALLY FURNISHED TO PERFORM AS DESCRIBED IN SPECIFICATIONS. THESE SHALL BE DELIVERED TO CONTRACTOR PERFORMING THE WORK UNDER ELECTRICAL SPECIFICATIONS FOR INSTALLATION. THERMAL OVERLOAD AND UNDER VOLTAGE PROTECTION SHALL BE PROVIDED IN ALL PHASES OF ALL MOTOR STARTERS.

C. FRACTIONAL HP MOTORS (LESS THAN 1/2 HP) – 120 VOLT SINGLE PHASE MOTORS SHALL BE CONTROLLED BY NEMA SIZE 00 MANUAL MOTOR CONTROLS WITH THERMAL OVERLOAD PROTECTION FOR SURFACE OR FLUSH MOUNTING. DEVICES IN FINISHED AREAS SHALL BE FLUSH MOUNTED. MAGNETIC MOTOR CONTROLS SHALL BE FURNISHED WITH A RED INDICATING LIGHT MOUNTED IN MOTOR CONTROL COVER.

HVAC POWER VENTILATORS - SECTION 15838

PART 1 - GENERAL

1.1 SUMMARY

A. Section Includes:
   1. Ceiling Units: Suspend units from structure; use steel wire or metal straps.

1.2 PERFORMANCE REQUIREMENTS

A. Project Altitude: Base fan-performance ratings on 1280 feet above sea level.

B. Operating Limits: Classify according to AMCA 99.

PART 2 - PRODUCTS

2.1 CEILING-MOUNTED VENTILATORS

A. Manufacturers: Subject to compliance with requirements, provide products by one of the following:
   1. Greenheck Fan Corporation.
   2. Loren Cook Company.
   3. Twin City Blowers.

B. Housing: Steel, lined with acoustical insulation.

C. Fan Wheel: Centrifugal wheels directly mounted on motor shaft. Fan shrouds, motor, and fan wheel shall be removable for service.

D. Grille: Plastic, louvered grille with flange on intake and thumbscrew attachment to fan housing.

E. Electrical Requirements: Junction box for electrical connection on housing and receptacle for motor plug-in.

F. Accessories:
   1. Variable-Speed Controller: Solid-state control to reduce speed from 100 to less than 50 percent.
   2. Isolation: Rubber-in-shear vibration isolators.
   3. Manufacturer's standard roof jack or wall cap, and transition fittings.

2.2 MOTORS

A. Comply with NEMA designation, temperature rating, service factor, enclosure type, and efficiency requirements for motors specified in Division 23 Section "Common Motor Requirements for HVAC Equipment."
   1. Motor Sizes: Minimum size as indicated. If not indicated, large enough so driven load will not require motor to operate in service factor range above 1.0.
   2. Controllers, Electrical Devices, and Wiring: Comply with requirements for electrical devices and connections specified in Division 26 Sections.

B. Enclosure Type: Totally enclosed, fan cooled.

PART 3 - EXECUTION

3.1 INSTALLATION

A. Install power ventilators level and plumb.

B. Ceiling Units: Suspend units from structure; use steel wire or metal straps.

C. Install units with clearances for service and maintenance.

PDG
PLANNING DESIGN GROUP
LANDSCAPE ARCHITECTURE ● RECREATIONAL DESIGN ● LAND PLANNING
5314 S. YALE AVE., SUITE 710, TULSA, OK 74135
918.628.1255 918.628.1256 FAX
WWW.PLANNINGDESIGNGROUP.COM

gsb inc
Architects Planners
3555 NW 58TH Street
Suite 700-W
Oklahoma City, OK 73112
T: 405.848.9549
F: 405.848.9783
www.gsb-inc.com

Copyright ©2022 GSB, Inc

LICENSED PROFESSIONAL ENGINEER
Heath Q. McKee
23072
06/03/2022
OKLAHOMA

PROJECT INFORMATION

PROJECT ADDRESS:

1001 E. ROBINSON ST.,
NORMAN, OKLAHOMA 73071

PROJECT NO.	171511A
DATE	06/03/22
DRAWN BY	CHECKED BY

GRIFFIN SOCCER COMPLEX
PHASE 6
NORMAN, OKLAHOMA

ISSUE/ REVISIONS

NO.	DATE	DESCRIPTION

OWNER:
THE CITY OF NORMAN PARKS & RECREATION
201-C WEST GRAY
NORMAN, OK 73069
(405) 366-5472

BID SET

MECHANICAL SPECIFICATIONS

M5.01C

ALLEN CONSULTING INCORPORATED
ACI Project No. 126.22.1
CA2192 Expires: 6/30/2022
110 N. Mercedes Dr., Suite 100
Norman, Ok 73069-6578
Ph.(405)447-2282, Fax(405)447-2284

GENERAL PROVISIONS MECHANICAL – SECTION 15000

PART 1 – GENERAL

1.01 DESCRIPTION

A. THIS CONTRACTOR SHALL FURNISH, DELIVER, ERECT, AND CONNECT COMPLETE ALL THE MATERIALS AND APPLIANCES DESCRIBED HEREIN AND ALSO ALL THE MATERIALS, APPLIANCES, TOOLS AND TRANSPORTATION, ETC., REQUIRED TO MAKE THE WORK COMPLETE IN ACCORDANCE WITH THE TRUE INTENT OF THE PLANS AND SPECIFICATIONS, AND AS REQUIRED TO LEAVE THE SYSTEM IN FIRST–CLASS OPERATING CONDITION, EXCLUDING THOSE ITEMS STATED AS WORK AND MATERIALS BY OTHERS.

1.02 RELATED WORK SPECIFIED IN OTHER SECTIONS

A. THE GENERAL REQUIREMENTS DIVISION 1 APPLYING TO THE GENERAL CONTRACTOR ALSO APPLIES TO THESE SUBCONTRACTORS.

1.03 CODES, STANDARDS, & SPECIFICATIONS

A. CODES: THE BASIS FOR THE DESIGN OF THIS SYSTEM WAS THE 2015 INTERNATIONAL BUILDING CODE (IBC). IN SPECIFIC, THE 2015 INTERNATIONAL PLUMBING CODE, 2015 INTERNATIONAL MECHANICAL CODE, AND 2015 INTERNATIONAL FIRE CODE WERE USED.

B. ORDINANCES AND CODES: THE CONTRACTOR SHALL COMPLY FULLY WITH ALL EXISTING AND CURRENT ORDINANCES, LAWS AND REGULATIONS OF THE CITY, COUNTY, STATE AND NATIONAL GOVERNMENTS, AND LOCAL UTILITIES, WHICH ARE APPLICABLE TO THE MATERIALS, LABOR AND WORK UNDER THIS CONTRACT. HE SHALL AT ALL TIME OBSERVE AND COMPLY WITH SUCH REGULATIONS AND SHALL PROTECT AND INDEMNIFY THE OWNER AGAINST ANY CLAIMS OR LIABILITY ARISING FROM OR BASED ON ANY VIOLATION OF IT.

C. IN CASE THE SPECIFICATIONS OR PLANS CONFLICT WITH SUCH ORDINANCES, LAWS OR REGULATIONS, THE CONFLICTING PORTION OF WORK AFFECTED SHALL BE INSTALLED IN STRICT ACCORDANCE WITH THE REGULATIONS ABOVE MENTIONED; THE REMAINDER OF THE PLANS AND SPECIFICATIONS, HOWEVER, SHALL REMAIN IN FULL FORCE. IN NO CASE WILL WORK OR MATERIALS INFERIOR TO THESE SPECIFICATIONS BE ACCEPTED EVEN IF PERMITTED BY CODE. IN PLACES WHERE CODES CONFLICT, THE LOCAL CODE SHALL HAVE PREFERENCE.

1.04 PRODUCT HANDLING AND STORAGE

A. SCHEDULING: THIS CONTRACTOR SHALL BE RESPONSIBLE FOR THE PROPER SCHEDULING, FOR DELIVERY OF HIS MATERIALS, EQUIPMENT, AND ETC., TO MINIMIZE THE POSSIBILITIES OF DAMAGE OR THEFT.

B. STORAGE: THIS CONTRACTOR SHALL BE RESPONSIBLE FOR THE PROPER CARE OF ALL HIS MATERIALS, EQUIPMENT, ETC., DELIVERED AT THE SITE. BUILDING MATERIALS, CONTRACTOR'S EQUIPMENT, ETC., MAY BE STORED ON THE PREMISES, BUT THE PLACING OF IT SHALL NOT INTERFERE WITH THE PROGRESS OF WORK BY OTHER TRADES AND IS SUBJECT TO APPROVAL OF THE ARCHITECT/GENERAL CONTRACTOR. WHEN ANY ROOM IN THE BUILDING IS USED AS A SHOP, STOREROOM, ETC., THE ONE MAKING USE OF SUCH ROOM WILL BE HELD RESPONSIBLE FOR ANY REPAIRS, PATCHING, OR CLEANING ARISING FROM SUCH USE.

C. DAMAGE: THIS CONTRACTOR SHALL PROTECT AND BE RESPONSIBLE FOR ANY DAMAGE TO HIS WORK OR MATERIAL, FROM THE DATE OF AGREEMENT UNTIL THE FINAL ACCEPTANCE IS MADE, AND SHALL MAKE GOOD WITHOUT COST TO THE OWNER, ANY DAMAGE OR LOSS THAT MAY OCCUR DURING THIS PERIOD. CONTRACTOR SHALL HANDLE ALL MATERIAL AS DIRECTED, SO THAT IT MAY BE INSPECTED BY THE ARCHITECT/ENGINEER. SHOULD ANY MATERIAL BE FOUND DEFECTIVE OR IN ANY WAY CONTRARY TO THE CONTRACT, THIS MATERIAL, NO MATTER IN WHAT STAGE OF COMPLETION, MAY BE REJECTED BY THE ARCHITECT, AND MUST BE REMOVED FROM THE PREMISES AT ONCE.

1.05 WARRANTY

A. THE CONTRACTOR SHALL DELIVER TO THE OWNER, VIA ARCHITECT, ALL WARRANTIES ON ALL EQUIPMENT, WHICH ARE FOR A LONGER PERIOD THAN ONE YEAR.

B. GUARANTEE: THE CONTRACTOR SHALL GUARANTEE THE APPARATUS AS INSTALLED BY HIM TO DEVELOP THE PERFORMANCE AS SPECIFIED AND SHALL GUARANTEE TO KEEP THE ENTIRE SYSTEM AS INSTALLED BY HIM OR HIS SUBCONTRACTORS IN REPAIR AND PERFECT WORKING ORDER FOR ONE YEAR AFTER DATE OF SUBSTANTIAL COMPLETION OF THE PROJECT AS DETERMINED BY THE ARCHITECT. THE CONTRACTOR SHALL FURNISH FREE OF COST TO THE OWNER ALL MATERIALS, LABOR, AND OTHER EXPENSES NECESSARY TO COMPLY WITH THE ABOVE GUARANTEE.

PART 2 – PRODUCTS

2.01 SCOPE

A. THIS CONTRACTOR SHALL FURNISH ALL PRODUCTS CALLED FOR OR REQUIRED, WHETHER SPECIFICALLY MENTIONED OR NOT, FOR PROPER AND SUCCESSFUL OPERATION OF THE SYSTEMS. THE PRODUCTS SHALL BE NEW AND A STANDARD CATALOG ITEM OF THE MANUFACTURER.

2.02 MATERIALS

A. ALL MATERIALS FURNISHED SHALL BE NEW AND A STANDARD CATALOG PRODUCT OF THE MANUFACTURER. EXPERIMENTAL OR UNPROVEN DESIGNS WILL NOT BE CONSIDERED.

PART 3 – EXECUTION

3.01 VISIT SITE

A. THIS CONTRACTOR SHALL VISIT THE SITE OF THIS BUILDING BEFORE SUBMITTING A PROPOSAL ON THIS WORK, AND SHALL THOROUGHLY FAMILIARIZE HIMSELF WITH THE EXISTING CONDITIONS. FAILURE ON HIS PART TO DO THIS WILL NOT BE CAUSE FOR EXTRAS AFTER THE CONTRACT IS SIGNED, BY REASON OF UNFORESEEN CONDITIONS.

3.02 PERMITS

A. ALL NECESSARY LICENSES OR PERMITS FOR THE CARRYING OUT OF THIS WORK MUST BE SECURED AND PAID FOR BY THE CONTRACTOR. THE CONTRACTOR SHALL BE RESPONSIBLE FOR ANY DAMAGE SUSTAINED DUE TO HIS FAILURE TO SECURE SUCH LICENSES OR PERMITS. THIS CONTRACTOR SHALL PAY ALL TAXES APPLICABLE TO HIS WORK OR MATERIALS.

3.03 PLANS & SPECIFICATIONS

A. THE SPECIFICATIONS AND DRAWINGS HAVE BEEN MADE TO FORM THE BASIS FOR THE INSTALLATION OF THIS CONTRACTOR'S WORK. THE PLANS AND SPECIFICATIONS SHALL BE CONSIDERED AS MUTUALLY EXPLANATORY, AND ANY WORK REQUIRED BY ONE, BUT NOT BY THE OTHER SHALL BE PERFORMED AS THOUGH REQUIRED BY BOTH. THE PLANS AND SPECIFICATIONS ARE PRESUMED TO BE ACCURATE BUT EXTREME ACCURACY IS NOT GUARANTEED. ANY ERRORS OR AMBIGUITIES IN THE PLANS AND/OR SPECIFICATIONS THAT ARE DISCOVERED BY THE CONTRACTOR SHALL BE REPORTED TO THE ARCHITECT/ENGINEER BEFORE WORK IS STARTED. OMISSION OF PARTICULAR REFERENCE TO ANY ITEM NECESSARY FOR COMPLETE INSTALLATION AND PROPER OPERATION THEREOF SHALL NOT RELIEVE THE CONTRACTOR OF THE RESPONSIBILITY OF FURNISHING THE SAME AT NO EXTRA COST. IN CASE OF A DISPUTE CONCERNING THE TRUE INTENT AND MEANING OF THESE PLANS AND SPECIFICATIONS, THE ARCHITECT/ENGINEER SHALL INTERPRET THE SAME, AND THEIR INTERPRETATION SHALL BE ACCEPTED BY THE CONTRACTOR AS FINAL. CHANGES FROM THE DRAWINGS TO MAKE THE WORK CONFORM TO THE STRUCTURE AND TO FIT THE WORK OF OTHER TRADES SHALL BE SUBMITTED TO THE ARCHITECT/ENGINEER FOR THEIR APPROVAL BEFORE ANY DEVIATIONS ARE MADE.

3.04 COOPERATION

A. THIS CONTRACTOR IS CAUTIONED TO EXAMINE ALL DRAWINGS AND SPECIFICATIONS RELATING TO ALL OTHER BRANCHES OF THE WORK, AND HE SHALL MAKE PROPER PROVISIONS TO RECEIVE ALL OTHER WORK. THIS CONTRACTOR SHALL COOPERATE FULLY WITH ALL OTHER TRADES ON THE WORK. IF ANY PART OF THIS CONTRACTOR'S WORK DEPENDS, FOR PROPER EXECUTION OR RESULTS UPON THE WORK OF ANY OTHER CONTRACTOR, THIS CONTRACTOR SHALL INSPECT AND PROMPTLY REPORT TO THE ARCHITECT/GENERAL CONTRACTOR ANY DEFECTS IN SUCH WORK THAT RENDER IT UNSUITABLE FOR SUCH EXECUTION AND RESULTS. TO INSURE AGAINST DELAYING ANY OTHER CONTRACTOR, THIS CONTRACTOR SHALL INSTALL IMMEDIATELY ANY OF HIS WORK NECESSARY AT THE TIME FOR CONTINUOUS CONSTRUCTION OPERATIONS, AND SHALL BE HELD RESPONSIBLE FOR ANY DELAYS CAUSED DUE TO HIS NEGLIGENCE. THIS CONTRACTOR SHALL AT ALL TIMES KEEP IN CLOSE CONTACT WITH THE PROJECT SO THAT ALL WORK WILL PROCEED WITHOUT DELAY.

3.05 WORKMANSHIP

A. ALL WORK DONE BY THIS CONTRACTOR OR HIS SUBCONTRACTOR SHALL BE ACCORDING TO THE BEST PRACTICES OF THE INDUSTRY. ANY WORK DEEMED UNSATISFACTORY BY THE ARCHITECT/ENGINEER SHALL BE REPLACED AT THE CONTRACTOR'S EXPENSE.

3.06 CLEAN UP

A. NO WASTE MATERIAL OR RUBBISH RESULTING FROM THIS WORK SHALL BE ALLOWED TO ACCUMULATE ON OR ABOUT THE PREMISES BUT SHALL BE PROMPTLY REMOVED AT THIS CONTRACTOR'S EXPENSE.

B. ALL AREAS AND EQUIPMENT AFFECTED BY THE WORK OF THIS CONTRACTOR SHALL BE LEFT IN A CLEAN, ORDERLY STATE AFTER COMPLETION OF THE PROJECT.

ELECTRIC UNIT HEATERS – SECTION 15792

PART 1 –GENERAL

1.01 DESCRIPTION

A. THE EXTENT OF THE ELECTRIC UNIT HEATER WORK IS INDICATED BY THE DRAWINGS, SCHEDULES AND SPECIFICATIONS.

1.02 SCOPE

A. PROVIDE ALL MATERIALS, EQUIPMENT, TOOLS, RIGGING, AND PERFORM ALL LABOR REQUIRED TO INSTALL SYSTEMS COMPLETE AS INDICATED, AS REQUIRED BY APPLICABLE CODES, AND AS SPECIFIED. THE SYSTEMS SHALL BE TESTED, ADJUSTED AND READY FOR OPERATION BY OWNER'S PERSONNEL.

1.03 SUBMITTAL

A. SUBMIT MANUFACTURER'S CATALOG CUTS CLEARLY INDICATING MODEL NUMBER, PERFORMANCE DATA, DIVERSIONS, DRAWINGS, AND DIAGRAMS AS NECESSARY TO SHOW COMPLETE COMPLIANCE WITH SPECIFICATIONS.

1.04 WIRING

A. CONTROL AND INTERLOCK WIRING SHOWN ON THE ELECTRICAL DRAWINGS WILL BE PROVIDED UNDER DIVISION 16000 OF THE SPECIFICATIONS. ALL OTHER CONTROL AND INTERLOCK WIRING REQUIRED FOR MECHANICAL EQUIPMENT TO OPERATE PROPERLY SHALL BE PROVIDED UNDER THIS SECTION. WIRING SHALL CONFORM TO THE NATIONAL ELECTRICAL CODE.

B. DISCONNECT SWITCHES SHALL BE PROVIDED AND INSTALLED BY THE MANUFACTURER FOR ALL ELECTRIC HEATERS SPECIFIED HEREIN. THESE SWITCHES SHALL BE RATED FOR THE LOAD SPECIFIED ON THE DRAWINGS.

PART 2 – PRODUCTS

2.05 ELECTRIC HEAVY DUTY CEILING HEATERS, 2' X 2'

A. EACH UNIT SHALL BE CAPABLE OF MOUNTING ON THE CEILING. CEILING MOUNTED UNITS SHALL BE RECESSED AND SHALL BE PROVIDED WITH A RECESSED BOX AND ALL PLASTER TRIM IF NECESSARY. UNIT SHALL BE A MARKEL SERIES 3480 COMPLETE WITH ALL CONTROLS FOR REMOTE THERMOSTAT. COORDINATE WITH ELECTRICAL CONTRACTOR FOR WIRING.

B. MOUNTING BRACKET: RECESSED HEATER SHALL HAVE A JUNCTION BOX ATTACHED TO THE HEATER CAN.

C. ELEMENT: TOTALLY ENCLOSED AND CORROSION RESISTANT. MAXIMUM FINNING FOR LOWER OPERATING TEMPERATURES. SHALL NOT REQUIRE A FILTER AND NOT BECOME DUST CLOGGED.

D. MOTOR: HEAVY–DUTY UNIT BEARING, PERMANENTLY LUBRICATED, TOTALLY ENCLOSED, IMPEDANCE PROTECTED.

E. BLADE: HIGH EFFICIENT, SPACE–SAVING BLADE OVER MOTOR DESIGN, INDIVIDUALLY BALANCED.

F. THERMAL CUTOUT: PROVIDE "ZERO VOLTAGE RESET" TYPE FOR HIGHEST DEGREE OF EFFECTIVENESS IF NORMAL OPERATING TEMPERATURES ARE EXCEEDED. HEATER MUST BE MANUALLY SHUT OFF FOR FIVE MINUTES TO RESET.

G. AIR INTAKE AND DISCHARGE: DISCHARGE VENTURI SHALL BE OF BULLS–EYE DESIGN TO PERMIT HEATED AIR TO BE DISTRIBUTED IN A UNIFORM PATTERN. AIR INTAKE SHALL BE 1/4" SQUARE STEEL SLOTTED LOUVER ON FOUR SIDES TO PERMIT COMPLETE AIR SEPARATION FROM THE ABOVE DESCRIBED DISCHARGE VENTURI.

H. CONTROLS: PROVIDE WALL MOUNTED THERMOSTAT, 24 VOLT, FOR USE WITH REMOTE CONTACTORS, MARKEL A6176 AND LOCKING GUARD A6280. UNIT SHALL BE PROVIDED WITH NECESSARY CONTROL TRANSFORMER AND REMOTE CONTACTORS FOR PROPER OPERATION.

I. PROVIDE A FIVE YEAR WARRANTY ON THE HEATERS.

PART 3 – EXECUTION

3.01 INSTALLATION

A. SHALL CONFORM TO MANUFACTURER'S WRITTEN INSTRUCTIONS AND DETAILS SHOWN ON DRAWINGS.

3.02 TEST AND ADJUST

A. EQUIPMENT READY FOR OPERATION BY OWNER'S PERSONNEL.

3.03 MOTORS AND CONTROLS

A. MOTORS SHALL BE DESIGNED TO OPERATE ON CURRENT SPECIFIED AS SHOWN ON DRAWINGS. UNLESS OTHERWISE SHOWN, MOTORS 1/2 HP AND LARGER SHALL BE 3–PHASE, WHILE SMALLER MOTORS SHALL BE SINGLE PHASE. WHERE MOTORS ARE REQUIRED TO BE LARGER THAN THOSE INDICATED ON PLANS TO MAKE EQUIPMENT PERFORM ADEQUATELY, CONTRACTOR SHALL BE RESPONSIBLE FOR ANY INCREASE MADE NECESSARY IN CONDUCTORS, CONDUIT, SWITCHES, ETC., AND PAY EXTRA COST FOR SAME.

B. MOTOR STARTERS AND CONTROLLERS SHALL BE PROVIDED FOR ALL MOTORS SUPPLIED UNDER THIS SECTION, UNLESS SPECIFICALLY FURNISHED TO PERFORM AS DESCRIBED IN SPECIFICATIONS. THESE SHALL BE DELIVERED TO CONTRACTOR PERFORMING THE WORK UNDER ELECTRICAL SPECIFICATIONS FOR INSTALLATION. THERMAL OVERLOAD AND UNDER VOLTAGE PROTECTION SHALL BE PROVIDED IN ALL PHASES OF ALL MOTOR STARTERS.

C. FRACTIONAL HP MOTORS (LESS THAN 1/2 HP) – 120 VOLT SINGLE PHASE MOTORS SHALL BE CONTROLLED BY NEMA SIZE 00 MANUAL MOTOR CONTROLS WITH THERMAL OVERLOAD PROTECTION FOR SURFACE OR FLUSH MOUNTING. DEVICES IN FINISHED AREAS SHALL BE FLUSH MOUNTED. MAGNETIC MOTOR CONTROLS SHALL BE FURNISHED WITH A RED INDICATING LIGHT MOUNTED IN MOTOR CONTROL COVER.

HVAC POWER VENTILATORS - SECTION 15838

PART 1 - GENERAL

1.1 SUMMARY

A. Section Includes:
   1. Ceiling Units: Suspend units from structure; use steel wire or metal straps.

1.2 PERFORMANCE REQUIREMENTS

A. Project Altitude: Base fan-performance ratings on 1280 feet above sea level.

B. Operating Limits: Classify according to AMCA 99.

PART 2 - PRODUCTS

2.1 CEILING-MOUNTED VENTILATORS

A. Manufacturers: Subject to compliance with requirements, provide products by one of the following:
   1. Greenheck Fan Corporation.
   2. Loren Cook Company.
   3. Twin City Blowers.

B. Housing: Steel, lined with acoustical insulation.

C. Fan Wheel: Centrifugal wheels directly mounted on motor shaft. Fan shrouds, motor, and fan wheel shall be removable for service.

D. Grille: Plastic, louvered grille with flange on intake and thumbscrew attachment to fan housing.

E. Electrical Requirements: Junction box for electrical connection on housing and receptacle for motor plug-in.

F. Accessories:
   1. Variable-Speed Controller: Solid-state control to reduce speed from 100 to less than 50 percent.
   2. Isolation: Rubber-in-shear vibration isolators.
   3. Manufacturer's standard roof jack or wall cap, and transition fittings.

2.2 MOTORS

A. Comply with NEMA designation, temperature rating, service factor, enclosure type, and efficiency requirements for motors specified in Division 23 Section "Common Motor Requirements for HVAC Equipment."
   1. Motor Sizes: Minimum size as indicated. If not indicated, large enough so driven load will not require motor to operate in service factor range above 1.0.
   2. Controllers, Electrical Devices, and Wiring: Comply with requirements for electrical devices and connections specified in Division 26 Sections.

B. Enclosure Type: Totally enclosed, fan cooled.

PART 3 - EXECUTION

3.1 INSTALLATION

A. Install power ventilators level and plumb.

B. Ceiling Units: Suspend units from structure; use steel wire or metal straps.

C. Install units with clearances for service and maintenance.

PDG
PLANNING DESIGN GROUP
LANDSCAPE ARCHITECTURE ● RECREATIONAL DESIGN ● LAND PLANNING
5314 S. YALE AVE., SUITE 710, TULSA, OK 74135
918.628.1255 918.628.1256 FAX
WWW.PLANNINGDESIGNGROUP.COM

gsb inc
Architects Planners
3555 NW 58TH Street
Suite 700-W
Oklahoma City, OK 73112
T: 405.848.9549
F: 405.848.9783
www.gsb-inc.com

Copyright ©2022 GSB, Inc

REGISTERED PROFESSIONAL ENGINEER
Heath Q. McKee
23072
06/03/2022
OKLAHOMA

PROJECT INFORMATION

PROJECT ADDRESS:

1001 E. ROBINSON ST.,
NORMAN, OKLAHOMA 73071

PROJECT NO.	171511A
DATE	06/03/22
DRAWN BY	CHECKED BY

GRIFFIN SOCCER COMPLEX
PHASE 6
NORMAN, OKLAHOMA

ISSUE/ REVISIONS

NO.	DATE	DESCRIPTION

OWNER:
THE CITY OF NORMAN PARKS & RECREATION
201-C WEST GRAY
NORMAN, OK 73069
(405) 366-5472

BID SET

ALLEN CONSULTING INCORPORATED
ACI Project No. 126.22.2
CA2192 Expires: 6/30/2022
110 N. Mercedes Dr., Suite 100
Norman, Ok. 73069-6578
Ph.(405)447-2282, Fax(405)447-2284

MECHANICAL SPECIFICATIONS

M5.01R

ELECTRICAL LEGEND

SYMBOL	DESCRIPTION
	LIGHTING NUMBER WITHIN OR ADJACENT TO FIXTURE INDICATES FIXTURE TYPE. RE: FIXTURE SCHEDULE
(2)	LIGHTING FIXTURE, RECESSED IN CEILING, UNO
(2)	LIGHTING FIXTURE ON EMERGENCY OR STANDBY POWER SOURCE
(2)	LIGHTING FIXTURE RECESSED, SURFACE OR PENDANT MOUNTED, UNO
(2)	STRIP LIGHTING FIXTURE
2	STRIP LIGHTING FIXTURE
2	STRIP LIGHTING FIXTURE ON EMERGENCY OR STANDBY POWER SOURCE
(2)	LIGHTING FIXTURE WALL MOUNTED
2	LIGHTING FIXTURE CEILING MOUNTED
2	LIGHTING FIXTURE ON EMERGENCY OR STANDBY POWER SOURCE
2	LIGHTING FIXTURE WALL MOUNTED
2	WALLWASH LIGHTING FIXTURE. OPEN SIDE INDICATES DIRECTION OF ILLUMINATION.
E1	EMERGENCY WALL PACK FIXTURE
X1	EXIT LIGHT WALL MOUNTED 8'-0" AFF TO CENTER, UNO SHADED AREA(S) INDICATE ILLUMINATED FACE(S)
X1	EXIT LIGHT CEILING MOUNTED
2	POLE MOUNTED LIGHTING FIXTURE
	SWITCHES MOUNT 46" AFF TO CENTER, UNO SUBSCRIPTS: WP WEATHERPROOF (IN USE) (CAST METAL) EP EXPLOSIONPROOF LV LOW VOLTAGE P PILOT LIGHT C COUNTER TOP MOUNTED (MOUNT 5" ABOVE BACKSPLASH TO CENTER)
$	SINGLE POLE, SINGLE THROW WALL SWITCH
$2	DOUBLE POLE, SINGLE THROW WALL SWITCH
$3	THREE WAY WALL SWITCH
$4	FOUR WAY WALL SWITCH
$D	DIMMER SWITCH
$E	PRESET LIGHTING CONTROL ENTRY SWITCH
$K	KEY SWITCH. LEVITON #122*-2KL SERIES OR APPROVED EQUAL WITH STANLESS STEEL COVERPLATE.
$LV	LOW VOLTAGE SWITCH
$LV/K	LOW VOLTAGE MOMENTARY CONTACT SPDT, CENTER OFF, KEY SWITCH.
$M	MANUAL MOTOR STARTER
$OS	OCCUPANCY SENSOR WALL SWITCH
$T	DIGITAL TIMER SWITCH
	RECEPTACLES MOUNT 18" AFF TO CENTER, UNO SUBSCRIPTS: GFI GROUND FAULT CIRCUIT INTERRUPTER WP WEATHERPROOF (IN USE) (CAST METAL) EP EXPLOSIONPROOF DL DAMP LOCATION FLIPCOVER SP SURGE PROTECTED IG ISOLATED GROUND C COUNTER TOP MOUNTED (MOUNT 5" ABOVE BACKSPLASH TO CENTER)
	SIMPLEX RECEPTACLE OUTLET
	DUPLEX RECEPTACLE OUTLET
	QUADPLEX RECEPTACLE OUTLET
	250V, TWIST LOCK, L6-20R RECEPTACLE OUTLET
	CLOCK OUTLET
	125/250V, NEMA 14-50R RECEPTACLE MOUNTED 36" AFF, UNO. PROVIDE MATCHING PIGTAIL FOR EACH OUTLET SHOWN ON DRAWINGS.
	SIMPLEX FLOOR OUTLET
	DUPLEX FLOOR OUTLET
	QUADPLEX FLOOR OUTLET
	SPECIAL PURPOSE FLOOR OUTLET, RE: PLANS
	ACCESS FLOOR SERVICE MODULE - POWER ONLY
	ACCESS FLOOR SERVICE MODULE - POWER AND COMMUNICATIONS
	COMMUNICATIONS PROVIDE 4" SQUARE, 2-1/8" DEEP BOX WITH APPROPRIATE SINGLE-GANG DEVICE RING FLUSH MTD 18" AFF TO CENTER AND 3/4" CONDUIT WITH PLASTIC BUSING AND PULLSTRING STUBBED ABOVE ACCESSIBLE CEILING OR AT DECK.
	TELEPHONE OUTLET
W	WALL MOUNT TELEPHONE AT 54" AFF TO CENTER, UNO.
	DATA OUTLET
	COMBINATION TELEPHONE/DATA OUTLET
	FLOOR TELEPHONE OUTLET
	FLOOR DATA OUTLET
	FLOOR COMBINATION TELEPHONE/DATA OUTLET

SYMBOL	DESCRIPTION
	PAGING/SOUND/INTERCOM SUBSCRIPTS: R RECESSED S SURFACE DB DOUBLE BAFFLE WP WEATHERPROOF VC VOLUME CONTROL
S	SPEAKER RECESSED IN CEILING, UNO
S	SPEAKER WALL MOUNTED
S	SPEAKER - TRUMPET TYPE, WALL MOUNTED, UNO
	BUZZER
$VC	VOLUME CONTROL WALL MOUNTED 46" AFF TO CENTER, UNO
	INTERCOM STATION CALL-IN SWITCH
	CIRCUITING/RACEWAY BRANCH CIRCUIT CONCEALED ABOVE CEILING OR WITHIN WALL. TICK MARKS INDICATE NUMBER OF CONDUCTORS, ( ) INDICATES GROUND CONDUCTOR, NO TICK MARKS INDICATES 2 #12, 1 #12GND., 3/4"C., UNO
	CONDUIT ROUTED EXPOSED
	CONDUIT ROUTED CONCEALED WITHIN OR BELOW FLOOR OR CONCRETE
	HOMERUN TO PANEL INDICATED. ARROWHEADS INDICATE NUMBER OF CCTS.
(PC)	PART CIRCUIT HOMERUN
LV	LOW VOLTAGE WIRING IN CONDUIT
	CONDUIT TURNING UP
	CONDUIT TURNING DOWN
	CONDUIT CHANGE IN ELEVATION
	CONDUIT CAPPED FOR FUTURE USE
	CONDUIT SEAL (APPLETON #EYSEF OR EQUAL)
	EXISTING CONDUIT TO BE REMOVED
C C	CABLE TRAY
W W	WIREWAY
DB DB	DUCTBANK
B B	BUSWAY
	BELOW RAISED ACCESS FLOOR 3/4" LIQUIDTIGHT FLEXIBLE METALLIC CONDUIT WITH PULLWIRE FOR TELECOMMUNICATIONS
T	EMT SIZED AS NOTED WITH PULLWIRE FOR TELECOMMUNICATIONS
P	3/4" LIQUIDTIGHT FLEXIBLE METALLIC CONDUIT WITH 2 #12, 1 #12 GND. FOR POWER, UNO
	POWER DISTRIBUTION 480V PANELBOARD SURFACE MOUNTED, UNO
	480V PANELBOARD FLUSH MOUNTED, UNO
	208V PANELBOARD SURFACE MOUNTED, UNO
	208V PANELBOARD FLUSH MOUNTED, UNO
	SAFETY DISCONNECT SWITCH XX = FUSE SIZE (NF=NON-FUSED) YY = SWITCH SIZE
	SAFETY DISCONNECT SWITCH PROVIDED WITH EQUIPMENT
	MOTOR STARTER X = STARTER NEMA SIZE YY = MCP SIZE, UNO (FYY=FUSE SIZE)
	MOTOR STARTER OR CONTROL PANEL FURNISHED WITH EQUIPMENT
	COMBINATION MOTOR STARTER AND DISCONNECT SWITCH X = STARTER NEMA SIZE YY = MCP SIZE, UNO (FYY=FUSE SIZE)
	COMBINATION MOTOR STARTER/DISCONNECT SWITCH OR CONTROL PANEL PROVIDED WITH EQUIPMENT
VFD	VARIABLE FREQUENCY DRIVE
5	MOTOR (HORSEPOWER AS INDICATED)
T	TRANSFORMER
J	JUNCTION BOX
J	JUNCTION BOX, WALL MOUNTED
PB	PULL BOX
J	UNDERFLOOR DUCT JUNCTION BOX
	CONTROL/MISC PUSHBUTTON STATION
PE	PHOTOELECTRIC CELL. MOUNT FACING NORTH WHENEVER POSSIBLE
T	THERMOSTAT OR TEMPERATURE SENSOR. RE: MECHANICAL
LS	CONTROL DEVICE: LS = LIMIT SWITCH, FS = FLOAT SWITCH, SV = SOLENOID VALVE
	GROUND ROD
	GROUND WELL
M	METER

SYMBOL	DESCRIPTION
	FIRE ALARM
FCP	FIRE ALARM CONTROL PANEL
FSA	FIRE ALARM SYSTEM ANNUNCIATOR
F	MANUAL PULL STATION (MTD. 46" AFF TO CENTER, UNO)
	ALARM HORN
	COMBINATION HORN/STROBE (MOUNTING HEIGHT AS REQ. BY LOCAL AHJ)
	ALARM BELL
	COMBINATION BELL/STROBE (MOUNTING HEIGHT AS REQ. BY LOCAL AHJ)
	CEILING MOUNTED ALARM STROBE
	CEILING MOUNTED COMBINATION HORN/STROBE
	ALARM STROBE LIGHT (MOUNTING HEIGHT AS REQ. BY LOCAL AHJ)
	SMOKE DETECTOR (UF = UNDERFLOOR)
	HEAT DETECTOR
	DUCT MOUNTED SMOKE DETECTOR
	FLOW SWITCH
	TAMPER SWITCH
	PRESSURE SWITCH
	DOOR HOLDER
CM	CONTROL MODULE
IAM	INDIVIDUAL ADDRESSABLE MODULE
MM	MONITOR MODULE
	SECURITY/INTRUSION ALARM
DS	INTRUSION ALARM DOOR SWITCH
DL	REMOTE DOOR LOCK/UNLOCK CONNECTION
DE	DOOR ENTRY DEVICE CONTACT
DX	DOOR EXIT DEVICE CONTACT
DO	DOOR OPERATOR CONNECTION
CR	CARD READER
	SECURITY CAMERA
	ELEMENTARY DIAGRAM CIRCUIT BREAKER XX = TRIP SIZE YY = FRAME SIZE
	DRAW OUT CIRCUIT BREAKER
	FUSE
	SWITCH
	FUSED SWITCH
	TRANSFORMER
	DELTA PRIMARY, WYE GROUNDED SECONDARY
	MEDIUM VOLTAGE LOADBREAK SEPARABLE CONNECTOR
	MEDIUM VOLTAGE DEADBREAK SEPARABLE CONNECTOR
	GROUND
	POTENTIAL TRANSFORMER
	CURRENT TRANSFORMER
	OVERLOAD RELAY
	LIGHTNING ARRESTOR
A	AMMETER
V	VOLTMETER
AS	AMMETER SWITCH
VS	VOLTMETER SWITCH
	PILOT LIGHT (R=RED, G=GREEN, A=AMBER)
CXX	RELAY COIL (SUBSCRIPT INDICATES NUMBER OF CONTACTS)
XX	NORMALLY OPEN CONTACT (SUBSCRIPT INDICATES COIL AND CONTACT NUMBER)
XX	NORMALLY CLOSED CONTACT
OL	THERMAL OVERLOAD RELAY CONTACT
	SOLENOID
	NORMALLY OPEN PUSHBUTTON
	NORMALLY CLOSED PUSHBUTTON
HOA	HAND-OFF-AUTO SWITCH
	DOUBLE THROW SWITCH
	NORMALLY CLOSED LIMIT SWITCH
	NORMALLY OPEN LIMIT SWITCH
	PRESSURE SWITCH
	TEMPERATURE SWITCH (FS=FREEZE STAT)
	FLOAT SWITCH
	FLOW SWITCH

NOTE: ALL SYMBOLS ARE NOT NECESSARILY USED ON THIS PROJECT

ABBREVIATIONS

ABBREVIATION	DESCRIPTION
A OR AMP	AMPERES
AC	ALTERNATING CURRENT
AFF	ABOVE FINISHED FLOOR
AFG	ABOVE FINISHED GRADE
AHJ	AUTHORITY HAVING JURISDICTION
AL	ALUMINUM
AIC	SYMMETRICAL AMPS INTERRUPTING CAPACITY
ARF	ABOVE RAISED FLOOR
AWG	AMERICAN WIRE GAUGE
AV	AUDIO/VISUAL
BACS	BUILDING AUTOMATION CONTROL SYSTEM
BFF	BELOW FINISHED FLOOR
BFG	BELOW FINISHED GRADE
BKR	BREAKER
BOF	BOTTOM OF FIXTURE
BLDG	BUILDING
C	CONDUIT
CB	CIRCUIT BREAKER
CCT	CIRCUIT
CU	COPPER
DDC	DIRECT DIGITAL CONTROL
EG	EQUIPMENT GROUND
ELEC	ELECTRICAL
EMCS	ENERGY MANAGEMENT & CONTROL SYSTEM
EMT	ELECTRICAL METALLIC TUBING
EP	EXPLOSION PROOF
ETC.	ET CETERA
EWC	ELECTRIC WATER COOLER
EXIST. OR E	EXISTING
FA	FIRE ALARM
FIC	FIBER OPTIC INTERCONNECT CENTER
FMC	FLEXIBLE METALLIC CONDUIT
GFI OR GFCI	GROUND FAULT CIRCUIT INTERRUPTER
GND.	GROUND
HPS	HIGH PRESSURE SODIUM
HV	HIGH VOLTAGE
HZ	HERTZ
IA	INTRUSION ALARM
IC	INTERCOM
IE.	THAT IS
IG	ISOLATED GROUND
KV	KILOVOLTS
KVA	KILOVOLT AMPERES
KWH	KILOWATT HOUR
LTFMC	LIQUID TIGHT FLEXIBLE METALLIC CONDUIT
LV	LOW VOLTAGE
MAX	MAXIMUM
MCA	MINIMUM CIRCUIT AMPACITY
MCB	MAIN CIRCUIT BREAKER
MCC	MOTOR CONTROL CENTER
MCP	MOTOR CIRCUIT PROTECTOR
MH	MANHOLE
MIN	MINIMUM
MISC.	MISCELLANEOUS
MLO	MAIN LUGS ONLY
MTG	MOUNTING
N/A	NOT APPLICABLE
N.C.	NORMALLY CLOSED
NEC	NATIONAL ELECTRICAL CODE
NEUT.	NEUTRAL
NIC	NOT IN CONTRACT
N.O.	NORMALLY OPEN
NL	NIGHT LIGHT (CONNECT TO UNSWITCHED CIRCUIT)
OC	ON CENTER
OH	OVERHEAD
PAF	PAINT AFTER FABRICATION
PC	PART CIRCUIT
PNL	PANELBOARD
POS	POINT OF SALE
PTT	PUSH TO TEST
PVC	POLYVINYL CHLORIDE
RE:	REFERENCE
RGSC	RIGID GALVANIZED STEEL CONDUIT
SCH.	SCHEDULE
SPECS	CONTRACT SPECIFICATIONS
SPD	SURGE PROTECTION DEVICE
SPDT	SINGLE POLE DOUBLE THROW
SPST	SINGLE POLE SINGLE THROW
S/N	SOLID NEUTRAL
TOF	TOP OF FIXTURE
TTB	TELEPHONE TERMINAL BOARD
TVSS	TRANSIENT VOLTAGE SURGE SUPPRESSION
TYP	TYPICAL
UC	UNDER COUNTER
UG	UNDERGROUND
UGC	UNDERGROUND COMMUNICATIONS
UGE	UNDERGROUND ELECTRIC
UGT	UNDERGROUND TELEPHONE
UL	UNDERWRITERS LABORATORIES
UNO	UNLESS NOTED OTHERWISE
V	VOLTS
VFD	VARIABLE FREQUENCY DRIVE
W	WATTS
WP	WEATHERPROOF
WPWIU	WEATHERPROOF-WHILE-IN-USE
W/	WITH
W/O	WITHOUT
XFMR	TRANSFORMER
ø	PHASE
+48"	MOUNTING HEIGHT ABOVE FINISHED FLOOR TO CENTER, UNO
-48"	MOUNTING DEPTH BELOW FINISHED FLOOR TO CENTER, UNO

PDG
PLANNING DESIGN GROUP
LANDSCAPE ARCHITECTURE • RECREATIONAL DESIGN • LAND PLANNING
5314 S. YALE AVE., SUITE 710, TULSA, OK 74135
918.628.1255 918.628.1256 FAX
WWW.PLANNINGDESIGNGROUP.COM

gsb inc. Architects Planners
3555 NW 58TH Street
Suite 700-W
Oklahoma City, OK 73112
T: 405.848.9549
F: 405.848.9783
www.gsb-inc.com

Copyright ©2022 GSB, Inc

REGISTERED PROFESSIONAL ENGINEER
JULIAN DUANE HORNER
17193
06-03-22
OKLAHOMA

PROJECT INFORMATION

PROJECT ADDRESS:

1001 E. ROBINSON ST.,
NORMAN, OKLAHOMA 73071

PROJECT NO.	171511A
DATE	06/03/22
DRAWN BY	CHECKED BY
ADH	JDH

GRIFFIN SOCCER COMPLEX PHASE 6
NORMAN, OKLAHOMA

ISSUE/ REVISIONS

NO.	DATE	DESCRIPTION

OWNER:
THE CITY OF NORMAN PARKS & RECREATION
201-C WEST GRAY
NORMAN, OK 73069
(405) 366-5472

BID SET

ELECTRICAL LEGEND AND ABBREVIATIONS

E1-00

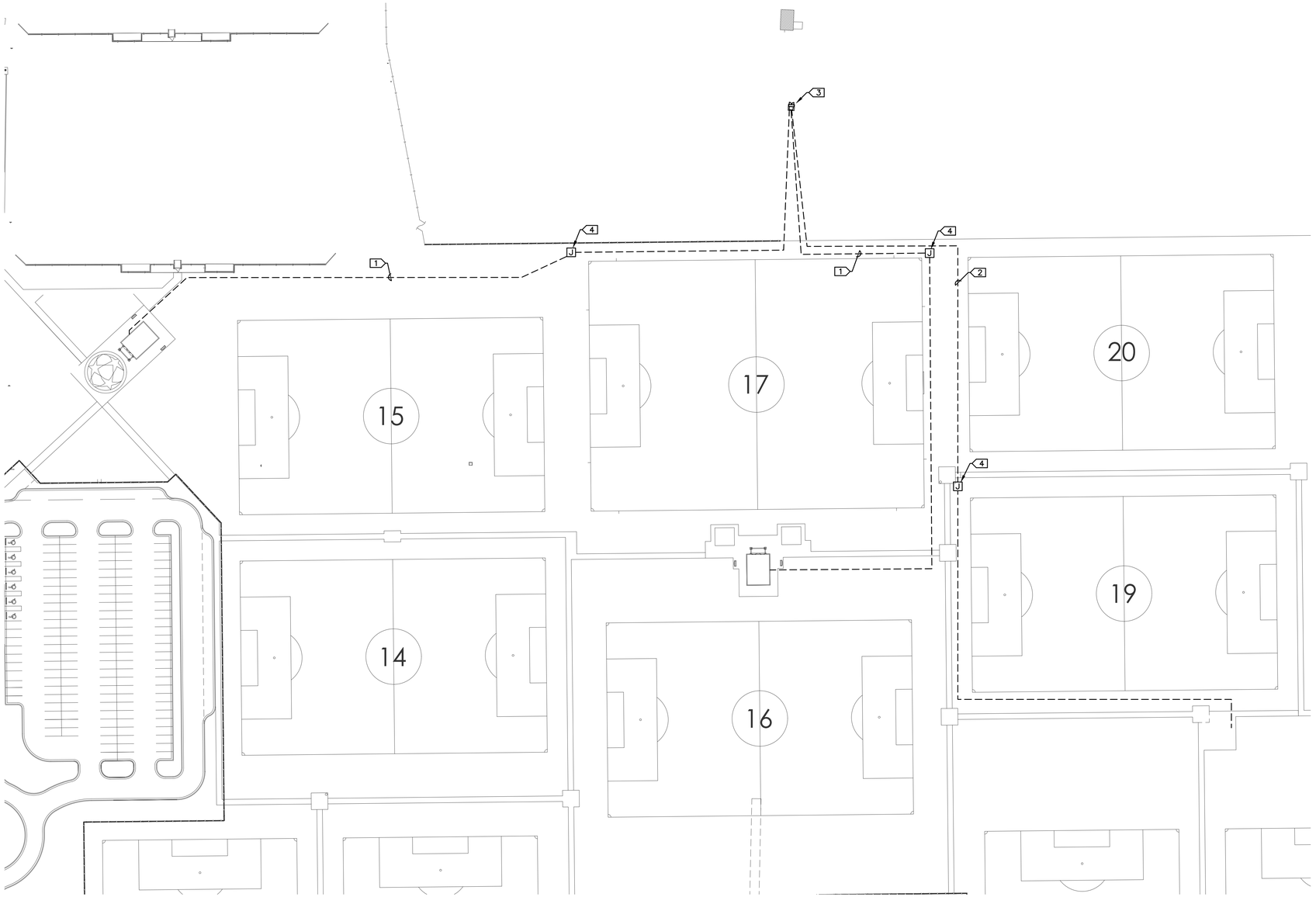

PLAN NORTH

1 / E1-01 ELECTRICAL SITE PLAN
1" = 60'-0"

GENERAL NOTES:

A. CONTRACTOR SHALL EXERCISE EXTREME CARE TO MAINTAIN ALL EXISTING UTILITIES WITHOUT INTERRUPTION. CONTRACTOR SHALL IMMEDIATELY REPAIR ANY DAMAGE INADVERTENTLY RENDERED TO EXISTING UTILITIES BY HIS WORK.

B. REFERENCE CIVIL DRAWINGS FOR UTILITIES. CALL OKIE BEFORE COMMENCING EXCAVATION.

C. CONTRACTOR SHALL DAYLIGHT ALL EXISTING UTILITIES BY HAND BEFORE COMMENCING WITH MACHINE DIGGING.

D. ROUTE FEEDER CONDUITS AT LEAST 36" BFG, TO TOP OF CONDUIT.

E. COORDINATE EXACT CONDUIT ROUTING WITH LANDSCAPE ARCHITECT.

F. ALL PULL BOXES SHALL BE LOCATED A MINIMUM OF 5' OUTSIDE THE PLAYING AREA.

G. CONTRACTOR SHALL COORDINATE INSTALLATION LOCATIONS, DEPTHS, ETC., WITH ALL OTHER UTILITIES, INCLUDING IRRIGATION.

KEYED NOTES:

1. 3 #4/0, 1 #1 NEUT. ALUMINUM, 2.5" C.
2. 3 #3/0, 1 #2 NEUT. ALUMINUM, 2" C.
3. PADMOUNT TRANSFORMER. PROVIDE SECONDARY LUGS AS REQUIRED FOR SERVICE LATERALS TO EACH BUILDING. ROUTE ALL SERVICE LATERALS THROUGH ELECTRIC METER CT'S. COORDINATE WITH UTILITY COMPANY.
4. PROVIDE IN-GRADE PULLBOX. COORDINATE BOX LOCATION WITH LANDSCAPE ARCHITECT. RE: DETAIL 1 THIS SHEET.

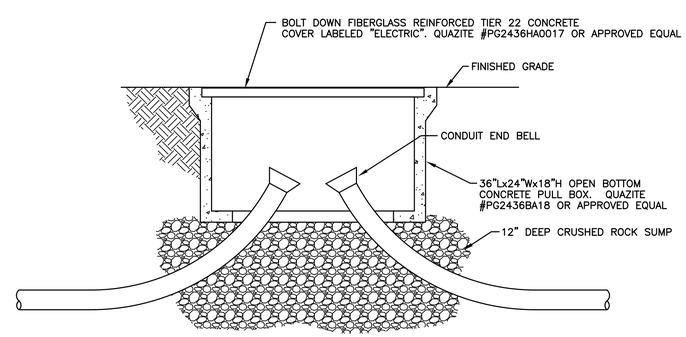

A / E1-01 PULLBOX DETAIL
NTS

PDG
PLANNING DESIGN GROUP
LANDSCAPE ARCHITECTURE • RECREATIONAL DESIGN • LAND PLANNING
5314 S. YALE AVE., SUITE 710, TULSA, OK 74135
918.628.1255 918.628.1256 FAX
WWW.PLANNINGDESIGNGROUP.COM

gsb inc. Architects Planners
3555 NW 58TH Street
Suite 700-W
Oklahoma City, OK 73112
T: 405.848.9549
F: 405.848.9783
www.gsb-inc.com
Copyright ©2022 GSB, Inc

REGISTERED PROFESSIONAL ENGINEER
JULIAN DUANE HORNER
17193
06-03-22
OKLAHOMA

PROJECT INFORMATION

PROJECT ADDRESS:

1001 E. ROBINSON ST.,
NORMAN, OKLAHOMA 73071

PROJECT NO.	171511A
DATE	06/03/22
DRAWN BY	CHECKED BY
ADH	JDH

GRIFFIN SOCCER COMPLEX
PHASE 6
NORMAN, OKLAHOMA

ISSUE/ REVISIONS

NO.	DATE	DESCRIPTION

OWNER:
THE CITY OF NORMAN PARKS & RECREATION
201-C WEST GRAY
NORMAN, OK 73069
(405) 366-5472

BID SET

ELECTRICAL SITE PLAN

E1-01

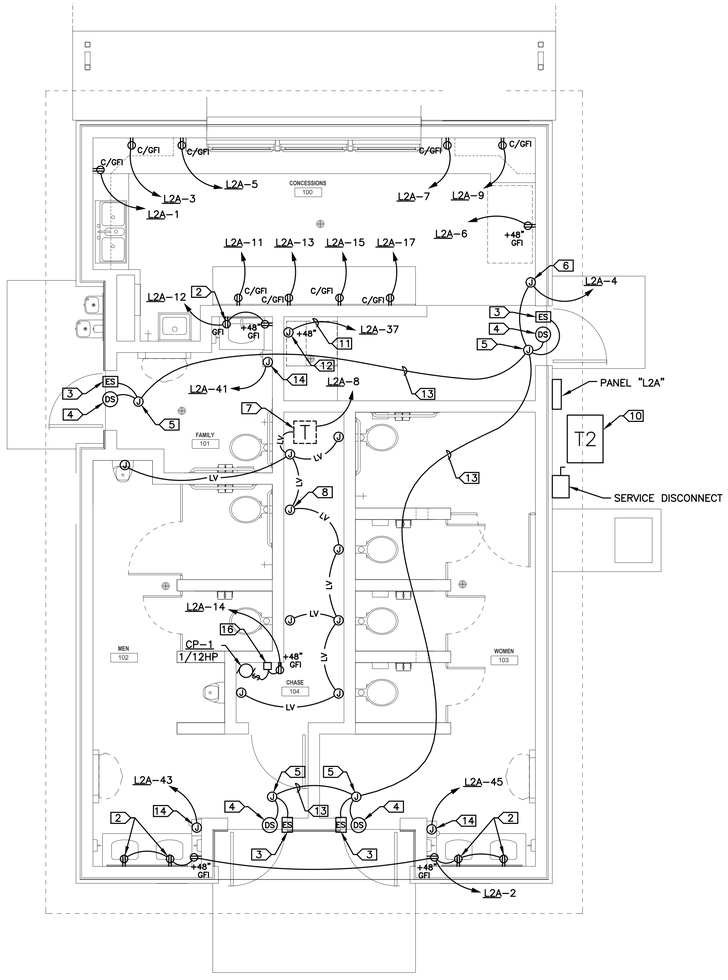

1 E2-01 CONCESSIONS POWER PLAN

1/4" = 1'-0"

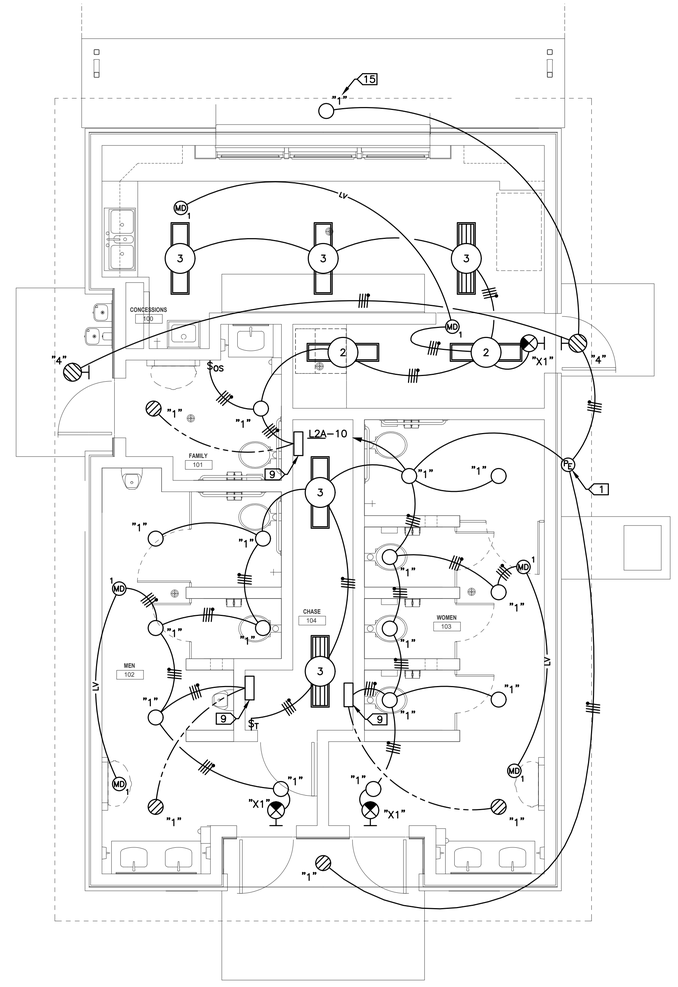

2 E2-01 CONCESSIONS LIGHTING PLAN

1/4" = 1'-0"

GENERAL NOTES:

A. CONNECT ALL EMERGENCY AND EXIT LIGHTS TO AN UNSWITCHED HOT CONDUCTOR ON THE SAME CIRCUIT AS GENERAL LIGHTING IN THE ROOM.

B. PROVIDE DEDICATED NEUTRALS FOR EACH CIRCUIT.

C. 20A, 120V CIRCUITS LONGER THAN 90' IN LENGTH SHALL BE #10 AWG.

D. HOMERUN NOT MORE THAN (4) 120V, 20A CIRCUITS TOGETHER IN A CONDUIT.

E. RE: ARCHITECTURAL REFLECTED CEILING PLAN FOR EXACT LOCATION OF CEILING MOUNTED DEVICES.

F. CONDUITS SHALL BE CONCEALED. ANY PROPOSED EXPOSED MUST BE APPROVED BY THE ARCHITECT AND ROUTED PERPENDICULAR AND PARALLEL TO BUILDING LINES IN A NEAT AND WORKMANLIKE MANNER. PAINT EXPOSED CONDUITS AS REQUIRED BY ARCHITECT.

G. CONTRACTOR SHALL ENSURE THAT ALL CODE REQUIRED WORKING SPACE CLEARANCES ARE MAINTAINED.

KEYED NOTES:

1. PHOTOCELL MOUNTED TIGHT TO SOFFIT FACING NORTH OR EAST. INTERMATIC #EK4436SM OR APPROVED EQUAL.
2. RECEPTACLE FOR AUTOMATIC LAVATORY. MOUNT BEHIND SHROUD ACCORDING TO MANUFACTURER'S DIMENSIONED INSTALLATION DRAWINGS.
3. ELECTRIC STRIKE IN LOCK JAMB. COORDINATE WITH SECURITY AND HARDWARE PROVIDERS.
4. MAGNETIC DOOR SWITCH IN HEAD JAMB. COORDINATE WITH SECURITY AND HARDWARE PROVIDERS.
5. ACCESSIBLE J-BOX IN CEILING OR WALL. COORDINATE LOCATION WITH SECURITY CONTRACTOR.
6. J-BOX FOR ACCESS CONTROL MODULE. COORDINATE EXACT LOCATION WITH SECURITY CONTRACTOR.
7. LOW VOLTAGE TRANSFORMER FOR FLUSH VALVES.
8. PROVIDE JUNCTION BOX FOR AUTOMATIC TOILET/URINAL FLUSH VALVE. COORDINATE EXACT LOCATION WITH PLUMBER.
9. 35W MICRO-INVERTER FOR EMERGENCY LIGHTING. COORDINATE EXACT MOUNTING LOCATION WITH MECHANICAL AND PLUMBING.
10. PROVIDE 4" HIGH CONCRETE HOUSEKEEPING PAD.
11. PROVIDE 1" CONDUIT WITH PULL STRING.
12. J-BOX FOR FUTURE ICE MACHINE. COORDINATE EXACT LOCATION WITH OWNER.
13. PROVIDE 3/4" CONDUIT FOR SECURITY/ACCESS CONTROL WIRING.
14. FLUSH MOUNTED J-BOX FOR HAND DRYER. COORDINATE EXACT MOUNTING HEIGHT AND LOCATION WITH EQUIPMENT INSTALLER.
15. IF 12' COVERED ALTERNATE IS ACCEPTED, PROVIDE A SECOND TYPE "1" FIXTURE PLACED AS DIRECTED BY ARCHITECT.
16. SEVEN DAY TIMER. RE: MECHANICAL

LIGHTING CONTROL PARTIAL LEGEND:

MD1 LARGE AREA CEILING MOUNTED DUAL TECHNOLOGY OCCUPANCY SENSOR.

MD2 CORNER MOUNT DUAL TECHNOLOGY OCCUPANCY SENSOR.

MD3 CORRIDOR DUAL TECHNOLOGY OCCUPANCY SENSOR.

$OS WALL BOX LINE VOLTAGE DUAL TECHNOLOGY OCCUPANCY SENSOR. COLOR BY ARCHITECT.

$T DIGITAL TIME SWITCH WITH AUDIBLE AND VISUAL ALARM. COLOR BY ARCHITECT.

EMERGENCY LIGHTING CIRCUIT (SEPARATE CONDUIT PER NEC).

LIGHTING FIXTURE SCHEDULE

FIXTURE TYPE	DESCRIPTION	DELIVERED LUMENS	INPUT WATTS	VOLTAGE	MOUNTING	NOTES
1	13" LED FLUSH MOUNT ROUND LITHONIA #FMML 13 840 DDBT	1,984	28	120	SURFACE	*1
2	4' LED STRIP WILLIAMS #7SS-4-L65/840-DIM-UNV	5,994	42.3	120 / 277	SURFACE	*1
3	SAME AS TYPE "2" WITH HIGHER LUMENS WILLIAMS #7SS-4-L85/840-DIM-UNV	8,098	56.2	120 / 277	SURFACE	*1
4	LED WALLPACK LSI #XWS LED 3L MTD UNV DIM 40 80RCI *** CWBB	3,201	25	120 / 277	WALL MOUNT	*2, *3
X1	LED EXIT LIGHT, RED ON WHITE WITH BATTERY LSI #EX R U WB WH			120 / 277	UNIVERSAL RE: PLANS	

LIGHTING FIXTURE SCHEDULE GENERAL NOTES:

A. SUBSTITUTIONS SHALL BE SUBMITTED FOR APPROVAL IN ACCORDANCE WITH ELECTRICAL SPECIFICATIONS.

LIGHTING FIXTURE SCHEDULE KEYED NOTES:

*1. WHERE FIXTURES ARE SHOWN HATCHED PROVIDE FACTORY INSTALLED BATTERY BACKUP WITH AT LEAST 10W CONTINUOUS OUTPUT. IOTA OR EQUAL.
*2. COORDINATE EXACT MOUNTING HEIGHT WITH ARCHITECT.
*3. COLOR TO BE SELECTED BY ARCHITECT.

PDG
PLANNING DESIGN GROUP
LANDSCAPE ARCHITECTURE • RECREATIONAL DESIGN • LAND PLANNING
5314 S. YALE AVE., SUITE 710, TULSA, OK 74135
918.628.1255 918.628.1256 FAX
WWW.PLANNINGDESIGNGROUP.COM

gsb inc. Architects Planners
3555 NW 58TH Street
Suite 700-W
Oklahoma City, OK 73112
T: 405.848.9549
F: 405.848.9783
www.gsb-inc.com
Copyright ©2022 GSB, Inc

REGISTERED PROFESSIONAL ENGINEER
JULIAN DUANE HORNER
17193
06-03-22
OKLAHOMA

PROJECT INFORMATION

PROJECT ADDRESS:

1001 E. ROBINSON ST.,
NORMAN, OKLAHOMA 73071

PROJECT NO.	171511A
DATE	06/03/22
DRAWN BY	CHECKED BY
ADH	JDH

GRIFFIN SOCCER COMPLEX
PHASE 6
NORMAN, OKLAHOMA

ISSUE/ REVISIONS

NO.	DATE	DESCRIPTION

OWNER:
THE CITY OF NORMAN PARKS & RECREATION
201-C WEST GRAY
NORMAN, OK 73069
(405) 366-5472

BID SET

LIGHTING & POWER FLOOR PLANS

E2-01

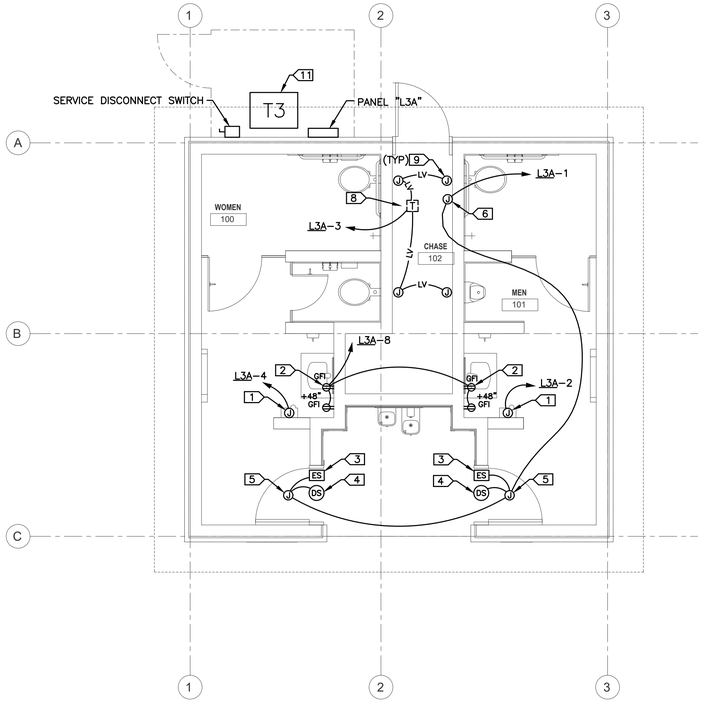

1 RESTROOMS POWER PLAN

E2-01 1/4" = 1'-0"

TRUE NORTH

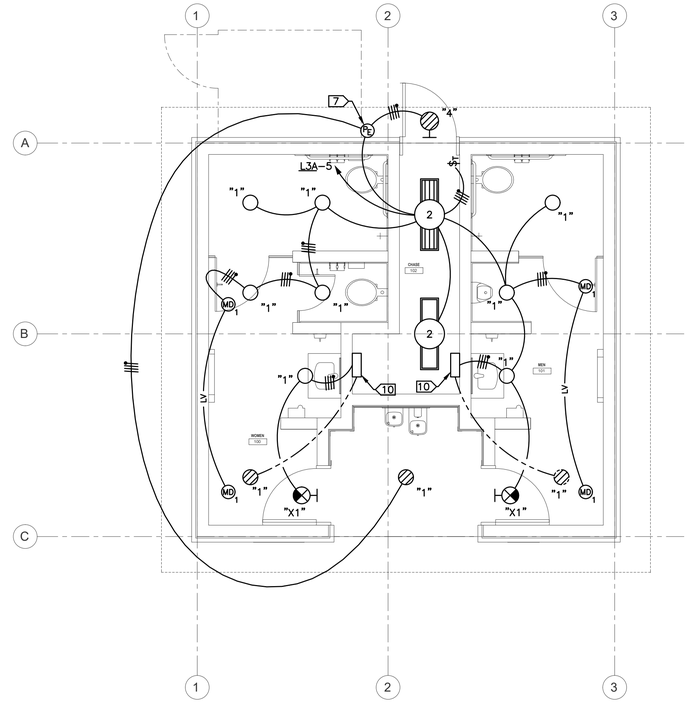

2 RESTROOMS LIGHTING PLAN

E2-01 1/4" = 1'-0"

TRUE NORTH

GENERAL NOTES:

A. CONNECT ALL EMERGENCY AND EXIT LIGHTS TO AN UNSWITCHED HOT CONDUCTOR ON THE SAME CIRCUIT AS GENERAL LIGHTING IN THE ROOM.

B. PROVIDE DEDICATED NEUTRALS FOR EACH CIRCUIT.

C. 20A, 120V CIRCUITS LONGER THAN 90' IN LENGTH SHALL BE #10 AWG.

D. HOMERUN NOT MORE THAN (4) 120V, 20A CIRCUITS TOGETHER IN A CONDUIT.

E. RE: ARCHITECTURAL REFLECTED CEILING PLAN FOR EXACT LOCATION OF CEILING MOUNTED DEVICES.

F. CONDUITS SHALL BE CONCEALED. ANY PROPOSED EXPOSED MUST BE APPROVED BY THE ARCHITECT AND ROUTED PERPENDICULAR AND PARALLEL TO BUILDING LINES IN A NEAT AND WORKMANLIKE MANNER. PAINT EXPOSED CONDUITS AS REQUIRED BY ARCHITECT.

G. CONTRACTOR SHALL ENSURE THAT ALL CODE REQUIRED WORKING SPACE CLEARANCES ARE MAINTAINED.

KEYED NOTES:

1. FLUSH MOUNTED J–BOX FOR HAND DRYER. COORDINATE EXACT MOUNTING HEIGHT AND LOCATION WITH EQUIPMENT INSTALLER.
2. RECEPTACLE FOR AUTOMATIC LAVATORY. MOUNT BEHIND SHROUD ACCORDING TO MANUFACTURER'S DIMENSIONED INSTALLATION DRAWINGS.
3. ELECTRIC STRIKE IN LOCK JAMB. COORDINATE WITH SECURITY AND HARDWARE PROVIDERS.
4. MAGNETIC DOOR SWITCH IN HEAD JAMB. COORDINATE WITH SECURITY AND HARDWARE PROVIDERS.
5. ACCESSIBLE J–BOX IN CEILING OR WALL. COORDINATE LOCATION WITH SECURITY CONTRACTOR.
6. J–BOX FOR ACCESS CONTROL MODULE. COORDINATE EXACT LOCATION WITH SECURITY CONTRACTOR.
7. PHOTOCELL MOUNTED TIGHT TO SOFFIT FACING NORTH OR EAST. INTERMATIC #EK4436SM OR APPROVED EQUAL.
8. LOW VOLTAGE TRANSFORMER FOR FLUSH VALVES.
9. PROVIDE JUNCTION BOX FOR AUTOMATIC TOILET/URINAL FLUSH VALVE. COORDINATE EXACT LOCATION WITH PLUMBER.
10. 35W MICRO–INVERTER FOR EMERGENCY LIGHTING. COORDINATE EXACT MOUNTING LOCATION WITH MECHANICAL AND PLUMBING.
11. PROVIDE 4" HIGH HOUSE KEEPING PAD.

LIGHTING CONTROL PARTIAL LEGEND:

MD 1 LARGE AREA CEILING MOUNTED DUAL TECHNOLOGY OCCUPANCY SENSOR.

MD 2 CORNER MOUNT DUAL TECHNOLOGY OCCUPANCY SENSOR.

MD 3 CORRIDOR DUAL TECHNOLOGY OCCUPANCY SENSOR.

$OS WALL BOX LINE VOLTAGE DUAL TECHNOLOGY OCCUPANCY SENSOR. COLOR BY ARCHITECT.

$T DIGITAL TIME SWITCH WITH AUDIBLE AND VISUAL ALARM. COLOR BY ARCHITECT.

EMERGENCY LIGHTING CIRCUIT (SEPARATE CONDUIT PER NEC).

PDG
PLANNING DESIGN GROUP
LANDSCAPE ARCHITECTURE • RECREATIONAL DESIGN • LAND PLANNING
5314 S. YALE AVE., SUITE 710, TULSA, OK 74135
918.628.1255 918.628.1256 FAX
WWW.PLANNINGDESIGNGROUP.COM

gsb inc. Architects Planners
3555 NW 58TH Street
Suite 700-W
Oklahoma City, OK 73112
T: 405.848.9549
F: 405.848.9783
www.gsb-inc.com
Copyright ©2022 GSB, Inc

REGISTERED PROFESSIONAL ENGINEER
JULIAN DUANE HORNER
17193
06-03-22
OKLAHOMA

PROJECT INFORMATION	
PROJECT ADDRESS:	
1001 E. ROBINSON ST., NORMAN, OKLAHOMA 73071	
PROJECT NO.	171511A
DATE	06/03/22
DRAWN BY	CHECKED BY
ADH	JDH

GRIFFIN SOCCER COMPLEX PHASE 6 NORMAN, OKLAHOMA

ISSUE/ REVISIONS

NO.	DATE	DESCRIPTION

OWNER:
THE CITY OF NORMAN PARKS & RECREATION
201-C WEST GRAY
NORMAN, OK 73069
(405) 366-5472

BID SET

LIGHTING & POWER FLOOR PLANS

E2-02

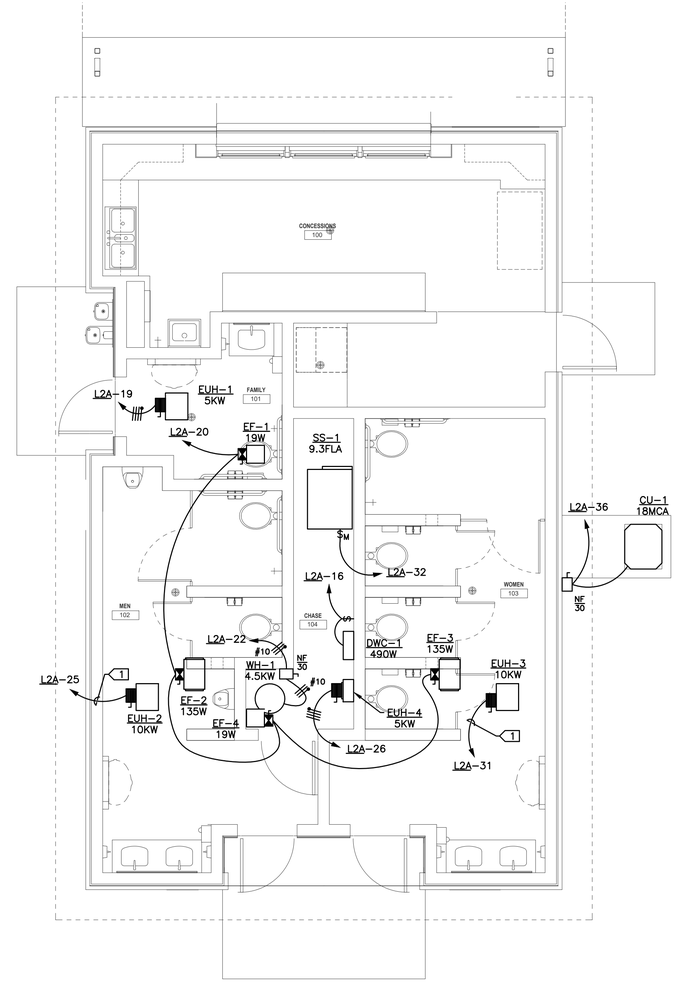

1 E3-01 CONCESSIONS MECHANICAL POWER PLAN
1/4" = 1'-0"

GENERAL NOTES:

A. PROVIDE FLUSH MOUNTED BOXES AND 1/2" CONDUIT STUBBED OUT ABOVE AN ACCESSIBLE CEILING FOR HVAC THERMOSTATS. RE: MECHANICAL DRAWINGS FOR EXACT QUANTITIES AND LOCATIONS. COORDINATE ROUGH-IN HEIGHT AND BOX TYPE AND ORIENTATION WITH TEMPERATURE CONTROLS CONTRACTOR. IN AREAS WITHOUT ACCESSIBLE CEILINGS, RUN A CONTINUOUS CONDUIT TO THE UNIT SERVED BY THERMOSTAT.

B. COORDINATE TEMPERATURE CONTROL WIRING REQUIREMENTS WITH MECHANICAL CONTRACTOR.

C. HOMERUN NOT MORE THAN (4) 120V, 20A CIRCUITS TOGETHER IN A CONDUIT.

D. CONTRACTOR SHALL VERIFY POWER REQUIREMENTS FOR ALL HVAC WITH NAMEPLATE RATING OF EQUIPMENT PROVIDED. MODIFY CIRCUIT BREAKER AND WIRE AS REQUIRED.

E. CONDUITS SHALL BE CONCEALED. ANY PROPOSED EXPOSED MUST BE APPROVED BY THE ARCHITECT AND ROUTED PERPENDICULAR AND PARALLEL TO BUILDING LINES IN A NEAT AND WORKMANLIKE MANNER. PAINT EXPOSED CONDUITS AS REQUIRED BY ARCHITECT.

F. CONTRACTOR SHALL ENSURE THAT ALL CODE REQUIRED WORKING SPACE CLEARANCES ARE MAINTAINED.

KEYED NOTES:

1. 3 #8, 1 #10 GND., 3/4" C.

PDG
PLANNING DESIGN GROUP
LANDSCAPE ARCHITECTURE • RECREATIONAL DESIGN • LAND PLANNING
5314 S. YALE AVE., SUITE 710, TULSA, OK 74135
918.628.1255 918.628.1256 FAX
WWW.PLANNINGDESIGNGROUP.COM

gsb inc. Architects Planners
3555 NW 58TH Street
Suite 700-W
Oklahoma City, OK 73112
T: 405.848.9549
F: 405.848.9783
www.gsb-inc.com
Copyright ©2022 GSB, Inc

REGISTERED PROFESSIONAL ENGINEER
JULIAN DUANE HORNER
17193
06-03-22
OKLAHOMA

PROJECT INFORMATION

PROJECT ADDRESS:

1001 E. ROBINSON ST.,
NORMAN, OKLAHOMA 73071

PROJECT NO.	171511A
DATE	06/03/22
DRAWN BY	CHECKED BY
ADH	JDH

GRIFFIN SOCCER COMPLEX
PHASE 6
NORMAN, OKLAHOMA

ISSUE/ REVISIONS

NO.	DATE	DESCRIPTION

OWNER:
THE CITY OF NORMAN PARKS & RECREATION
201-C WEST GRAY
NORMAN, OK 73069
(405) 366-5472

BID SET

MECHANICAL POWER PLAN

E3-01

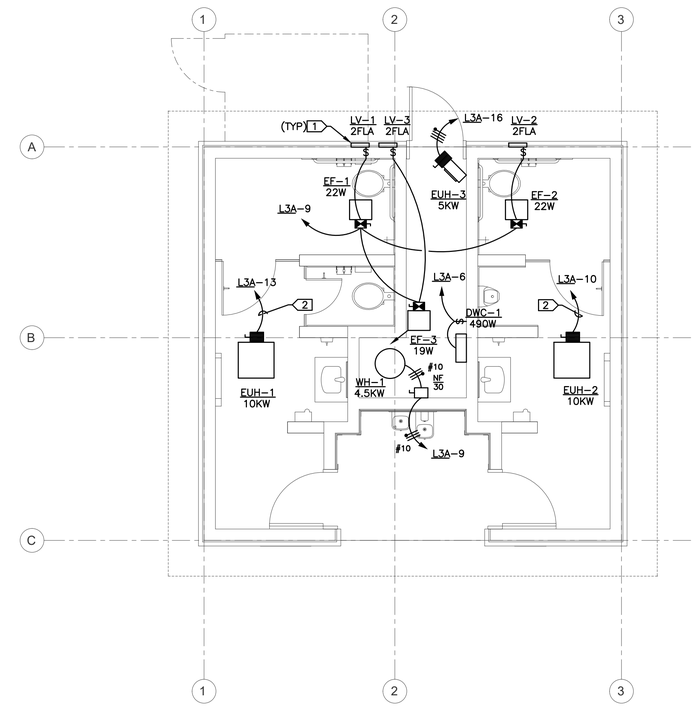

TRUE NORTH

1 E3-01 RESTROOMS MECHANICAL POWER PLAN

1/4" = 1'-0"

GENERAL NOTES:

A. PROVIDE FLUSH MOUNTED BOXES AND 1/2" CONDUIT STUBBED OUT ABOVE AN ACCESSIBLE CEILING FOR HVAC THERMOSTATS. RE: MECHANICAL DRAWINGS FOR EXACT QUANTITIES AND LOCATIONS. COORDINATE ROUGH-IN HEIGHT AND BOX TYPE AND ORIENTATION WITH TEMPERATURE CONTROLS CONTRACTOR. IN AREAS WITHOUT ACCESSIBLE CEILINGS, RUN A CONTINUOUS CONDUIT TO THE UNIT SERVED BY THERMOSTAT.

B. COORDINATE TEMPERATURE CONTROL WIRING REQUIREMENTS WITH MECHANICAL CONTRACTOR.

C. HOMERUN NOT MORE THAN (4) 120V, 20A CIRCUITS TOGETHER IN A CONDUIT.

D. CONTRACTOR SHALL VERIFY POWER REQUIREMENTS FOR ALL HVAC WITH NAMEPLATE RATING OF EQUIPMENT PROVIDED. MODIFY CIRCUIT BREAKER AND WIRE AS REQUIRED.

E. CONDUITS SHALL BE CONCEALED. ANY PROPOSED EXPOSED MUST BE APPROVED BY THE ARCHITECT AND ROUTED PERPENDICULAR AND PARALLEL TO BUILDING LINES IN A NEAT AND WORKMANLIKE MANNER. PAINT EXPOSED CONDUITS AS REQUIRED BY ARCHITECT.

F. CONTRACTOR SHALL ENSURE THAT ALL CODE REQUIRED WORKING SPACE CLEARANCES ARE MAINTAINED.

KEYED NOTES:

1. INTERLOCK LOUVERS WITH EXHAUST FANS TO OPEN WHEN EXHAUST FAN STARTS.
2. 3 #8, 1 #10 GND., 3/4" C.

PDG
PLANNING DESIGN GROUP
LANDSCAPE ARCHITECTURE • RECREATIONAL DESIGN • LAND PLANNING
5314 S. YALE AVE., SUITE 710, TULSA, OK 74135
918.628.1255 918.628.1256 FAX
WWW.PLANNINGDESIGNGROUP.COM

gsb inc. Architects Planners
3555 NW 58TH Street
Suite 700-W
Oklahoma City, OK 73112
T: 405.848.9549
F: 405.848.9783
www.gsb-inc.com
Copyright ©2022 GSB, Inc

REGISTERED PROFESSIONAL ENGINEER
JULIAN DUANE HORNER
17193
06-03-22
OKLAHOMA

PROJECT INFORMATION

PROJECT ADDRESS:

1001 E. ROBINSON ST.,
NORMAN, OKLAHOMA 73071

PROJECT NO.	171511A
DATE	06/03/22
DRAWN BY	CHECKED BY
ADH	JDH

GRIFFIN SOCCER COMPLEX
PHASE 6
NORMAN, OKLAHOMA

ISSUE/ REVISIONS

NO.	DATE	DESCRIPTION

OWNER:
THE CITY OF NORMAN PARKS & RECREATION
201-C WEST GRAY
NORMAN, OK 73069
(405) 366-5472

MECHANICAL POWER PLAN

E3-02

BID SET

CIRCUITING SCHEDULE

TAG	AMPACITY	WIRE AND CONDUIT SIZE
1	20	2 #12, 1 #12 GND., 3/4" C.
2	20	3 #12, 1 #12 GND., 3/4" C.
3	20	4 #12, 1 #12 GND., 3/4" C.
4	30	2 #10, 1 #10 GND., 3/4" C.
5	30	3 #10, 1 #10 GND., 3/4" C.
6	30	4 #10, 1 #10 GND., 3/4" C.
7	40	2 #8, 1 #10 GND., 3/4" C.
8	40	3 #8, 1 #10 GND., 3/4" C.
9	40	4 #8, 1 #10 GND., 1" C.
10	60	2 #6, 1 #10 GND., 3/4" C.
11	60	3 #6, 1 #10 GND., 1" C.
12	60	4 #6, 1 #10 GND., 1" C.
13	70	3 #4, 1 #8 GND., 1" C.
14	70	4 #4, 1 #8 GND., 1-1/4" C.
15	85	3 #3, 1 #8 GND., 1-1/4" C.
16	100	3 #2, 1 #8 GND., 1-1/4" C.
17	100	4 #2, 1 #8 GND., 1-1/4" C.
18	100	3 #2(PHASE), 2 #2(NEUT.), 1 #8 GND., 1-1/2" C.
19	110	3 #1, 1 #6 GND., 1-1/2" C.
20	110	4 #1, 1 #6 GND., 1-1/2" C.
21	150	3 #1/0, 1 #6 GND., 1-1/2" C.
22	150	4 #1/0, 1 #4 GND., 2" C.
23	150	3 #1/0(PHASE), 2 #1/0(NEUT.), 1 #6 GND., 2" C.
24	175	3 #2/0, 1 #6 GND., 2" C.
25	200	3 #3/0, 1 #6 GND., 2" C.
26	200	4 #3/0, 1 #6 GND., 2" C.
27	230	3 #4/0, 1 #4 GND., 2" C.
28	230	4 #4/0, 1 #2 GND., 2-1/2" C.
29	230	3 #4/0(PHASE), 2 #4/0(NEUT.), 1 #4 GND., 2-1/2" C.
30	255	3 #250 KCMIL, 1 #4 GND., 2-1/2" C.
31	255	4 #250 KCMIL, 1 #4 GND., 3" C.
32	255	3 #250 KCMIL(PHASE), 2 #250 KCMIL(NEUT.), 1 #4 GND., 3" C.
33	285	3 #300 KCMIL, 1 #4 GND., 2-1/2" C.
34	300	3 #350 KCMIL, 1 #4 GND., 3" C.
35	400	3 #600 KCMIL, 1 #3 GND., 3-1/2" C.
36	400	4 #600 KCMIL, 1 #3 GND., 3-1/2" C.
37	400	3 #600 KCMIL(PHASE), 2 #600 KCMIL(NEUT.), 1 #3 GND., 4" C.
38	460	2 - 2" C. EACH WITH 3 #4/0, 1 #2 GND.
39	500	2 - 2-1/2" C. EACH WITH 3 #250 KCMIL, 1 #2 GND.
40	500	2 - 3" C. EACH WITH 4 #250 KCMIL, 1 #2 GND.
41	500	2 - 3" C. EACH WITH 3 #250 KCMIL(PHASE), 2 #250 KCMIL(NEUT.), 1 #2 GND.
42	600	2 - 3" C. EACH WITH 3 #350 KCMIL, 1 #1 GND.
43	600	2 - 3" C. EACH WITH 4 #350 KCMIL, 1 #1 GND.
44	600	2 - 3-1/2" C. EACH WITH 3 #350 KCMIL(PHASE), 2 #350 KCMIL(NEUT.), 1 #1 GND.
45	800	3 - 2-1/2" C. EACH WITH 3 #300 KCMIL, 1 #1/0 GND.
46	800	3 - 2-1/2" C. EACH WITH 4 #300 KCMIL, 1 #1/0 GND.
47	800	3 - 3" C. EACH WITH 3 #300 KCMIL(PHASE), 2 #300 KCMIL(NEUT.), 1 #1/0 GND.
48	800	3 - 3-1/2" C. EACH WITH 4 #300 KCMIL
49	1000	4 - 4" C. EACH WITH 3 #250 KCMIL, 1 #2/0 GND.
50	1000	4 - 4" C. EACH WITH 4 #250 KCMIL, 1 #2/0 GND.
51	1000	4 - 4" C. EACH WITH 4 #250 KCMIL
52	1200	4 - 4" C. EACH WITH 3 #350 KCMIL, 1 #3/0 GND.
53	1200	4 - 4" C. EACH WITH 4 #350 KCMIL, 1 #3/0 GND.
54	1200	4 - 4" C. EACH WITH 4 #350 KCMIL
55	1600	5 - 4" C. EACH WITH 3 #400 KCMIL, 1 #4/0 GND.
56	1600	5 - 4" C. EACH WITH 4 #400 KCMIL, 1 #4/0 GND.
57	1600	5 - 4" C. EACH WITH 4 #400 KCMIL
58	2000	6 - 4" C. EACH WITH 3 #400 KCMIL, 1 #250 KCMIL GND.
59	2000	6 - 4" C. EACH WITH 4 #400 KCMIL, 1 #250 KCMIL GND.
60	2000	6 - 4" C. EACH WITH 4 #400 KCMIL
61	2500	8 - 4" C. EACH WITH 3 #400 KCMIL, 1 #350 KCMIL GND.
62	2500	8 - 4" C. EACH WITH 4 #400 KCMIL, 1 #350 KCMIL GND.
63	2500	8 - 4" C. EACH WITH 4 #400 KCMIL
64	3000	8 - 4" C. EACH WITH 3 #500 KCMIL, 1 #400 KCMIL GND.
65	3000	8 - 4" C. EACH WITH 4 #500 KCMIL, 1 #400 KCMIL GND.
66	3000	8 - 4" C. EACH WITH 4 #500 KCMIL
67	4000	11 - 4" C. EACH WITH 3 #500 KCMIL, 1 #500 KCMIL GND.
68	4000	11 - 4" C. EACH WITH 4 #500 KCMIL, 1 #500 KCMIL GND.
69	4000	11 - 4" C. EACH WITH 4 #500 KCMIL
70	1520	6-4"C.; 4-4"C. EACH WITH 4# 500 KCMIL AND 2-4" C. EMPTY W/ PULL ROPE

NOTE: ALL SCHEDULE ITEMS ARE NOT NECESSARILY USED ON THIS PROJECT.

TRANSFORMER SCHEDULE

XFMR TAG	SIZE (KVA)	VOLTAGE	GROUNDING ELECTRODE COND.	K FACTOR RATING	REMARKS
T2	75	480△-208Y/120V, 3ø	#2	K-1	NEMA 3R, VENT SCREENS
T3	45	480△-208Y/120V, 3ø	#4	K-1	NEMA 3R, VENT SCREENS

KEYED NOTES:
1. RE: SHEET E1-01 FOR SIZE OF SERVICE LATERAL.
2. PROVIDE SERVICE ENTRANCE LABEL.

PANEL L3A SCHEDULE

VOLTS (L-L) 208 PHASE 3 WIRE 4 S/N BUS YES EG BUS YES MOUNT. SURFACE ENCLOSURE NEMA 12/3R
DISCONNECT MAIN CIRCUIT BREAKER DISC. AMPS 150 PANEL AMPS 150 PANEL AIC 10,000 MINIMUM
COMMENTS PROVIDE INTEGRAL SPD RATED 50KA PER MODE

CCT. NO.	TRIP AMP	NO. POLE	LOAD TYPE	LOAD SERVED	A	B	C	LOAD SERVED	LOAD TYPE	NO. POLE	TRIP AMP	CCT. NO.
1	20	1	R	ACCESS CONTROL	400							
					1,500			HAND DRYER - MENS	R	1	20	2
3	20	1	R	FLUSH VAVLES		180						
						1,500		HAND DRYER - WOMENS	R	1	20	4
5	20	1	R	LIGHTING			418					
							490	DWC-1	M	1	20	6
7	20	1	M	EF-1,2,3	63							
					900			BATHROOM RECEPTACLES	R	1	20	8
9	30	2	M	WH-1		2,250						
						3,333		EUH-2	M	3	40	10
11							2,250					
							3,333					12
13	40	3	M	EUH-1	3,333							
					3,333							14
15						3,333						
						1,667		EUH-3	M	3	20	16
17							3,333					
							1,667					18
19	40	3		SPARE								
					1,667							20
21												
								SPARE		3	40	22
23												
												24
25	20	1		SPARE								
												26
27	20	1		SPARE								
								SPARE		1	20	28
29	20	1		SPARE								
								SPARE		1	20	30
31	20	1		SPARE								
								SPARE		1	20	32
33	20	1		SPARE								
								SPARE		1	20	34
35	20	1		SPARE								
								SPARE		1	20	36
TOTAL CONNECTED LOAD 35.0 KVA					11,196	12,263	11,491					

ESTIMATED DEMAND LOAD 33.7 KVA
DEMAND LINE AMPS 94

PANEL L2A SCHEDULE (TYPICAL OF TWO)

VOLTS (L-L) 208 PHASE 3 WIRE 4 S/N BUS YES EG BUS YES MOUNT. SURFACE ENCLOSURE NEMA 1
DISCONNECT MAIN CIRCUIT BREAKER DISC. AMPS 225 PANEL AMPS 225 PANEL AIC 10,000 MINIMUM
COMMENTS PROVIDE INTEGRAL SPD RATED 50KA PER MODE. PROVIDE PADLOCKABLE HANDLE LOCKS WHERE NOTED.

CCT. NO.	TRIP AMP	NO. POLE	LOAD TYPE	LOAD SERVED	A	B	C	LOAD SERVED	LOAD TYPE	NO. POLE	TRIP AMP	CCT. NO.
1	20	1	R	CONCESSIONS NORTH WEST	1,500							
					1,080			BATHROOMS LAVATORY	R	1	20	2
3	20	1	R	CONCESSIONS NORTH WEST		1,500						
						800		ACCESS CONTROL	R	1	20	4
5	20	1	R	CONCESSIONS NORTH WEST			1,500					
							1,500	REFRIGERATOR	R	1	20	6
7	20	1	R	CONCESSIONS NORTH EAST	1,500							
					405			FLUSH VALVES	R	1	20	8
9	20	1	R	CONCESSIONS NORTH EAST		1,500						
						948		LIGHTING	L	1	20	10
11	20	1	R	CONCESSIONS SOUTH WEST			1,500					
							360	FAMILY RESTROOM	R	1	20	12
13	20	1	R	CONCESSIONS S.W. CENTER	1,500							
					240			CP-1	M	1	20	14
15	20	1	R	CONCESSIONS S.E. CENTER		1,500						
						490		DWC-1	M	1	20	16
17	20	1	R	CONCESSIONS SOUTH EAST			1,500					
								SPARE		1	20	18
19	20	3	M	EUH-1	1,667							
					308			EF-1,2,3,4	M	1	20	20
21						1,667						
						2,250		WH-1	M	2	30	22
23							1,667					
							2,250					24
25	40	3	M	EUH-2	3,333							
					1,667			EUH-4	M	3	20	26
27						3,333						
						1,667						28
29							3,333					
							1,667					30
31	40	3	M	EUH-3	3,333							
					1,116			SS-1	M	1	15	32
33						3,333						
								SPARE		1	20	34
35							3,333					
							1,872	CU-1	M	2	20	36
37	30	2	O	ICE MAKER	1,100							
					1,872							38
39						1,100						
								SPARE		2	30	40
41	20	1	C	HAND DRYER - FAMILY (HANDLE LOCK)			1,920					
												42
43	20	1	C	HAND DRYER - MENS (HANDLE LOCK)	1,920							
								SPARE		3	40	44
45	20	1	C	HAND DRYER - WOMENS (HANDLE LOCK)		1,920						
												46
47	20	1		SPARE								
												48
49	20	1		SPARE								
								SPARE		1	20	50
51	20	1		SPARE								
								SPARE		1	20	52
53	20	1		SPARE								
								SPARE		1	20	54
TOTAL CONNECTED LOAD 67.0 KVA					22,541	22,008	22,402					

ESTIMATED DEMAND LOAD 59.4 KVA
DEMAND LINE AMPS 165

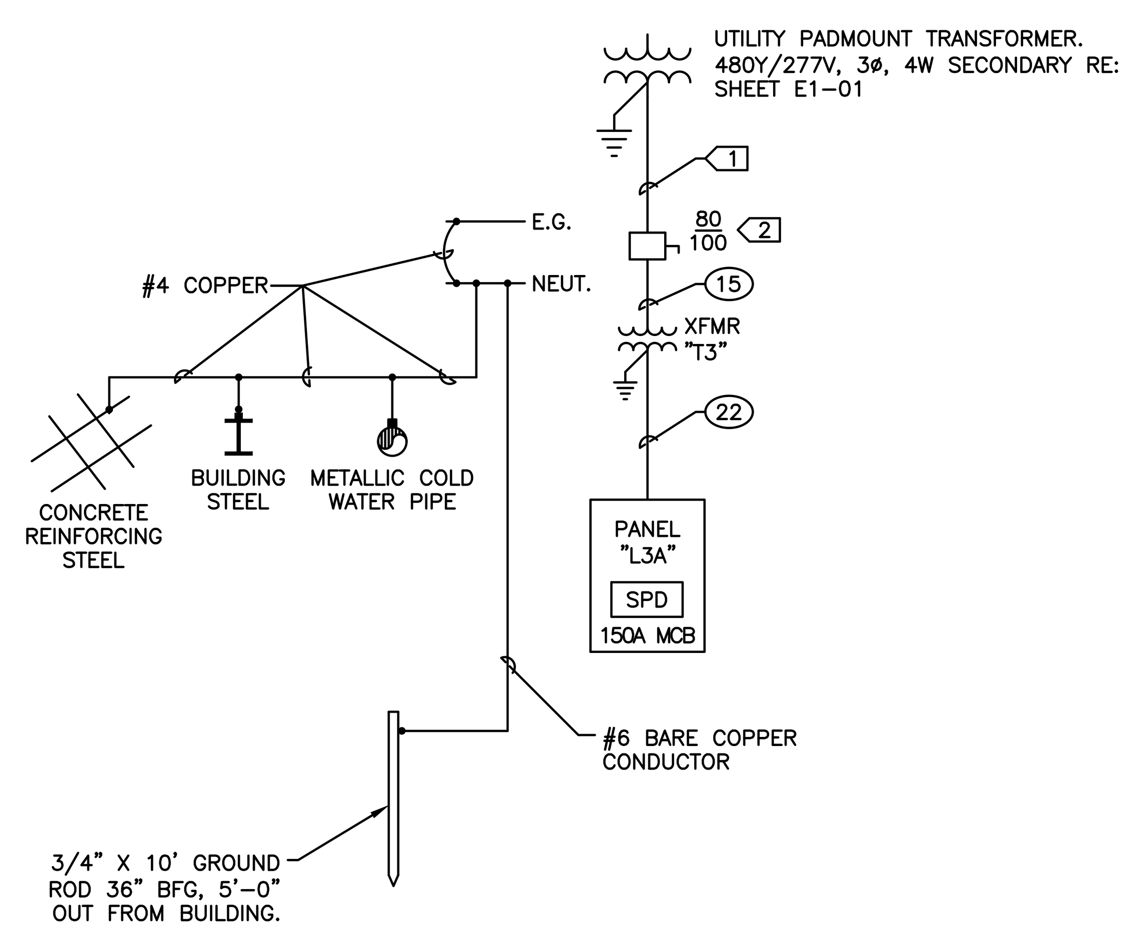

1 E4-01 ONE-LINE DIAGRAM - RESTROOMS
NTS

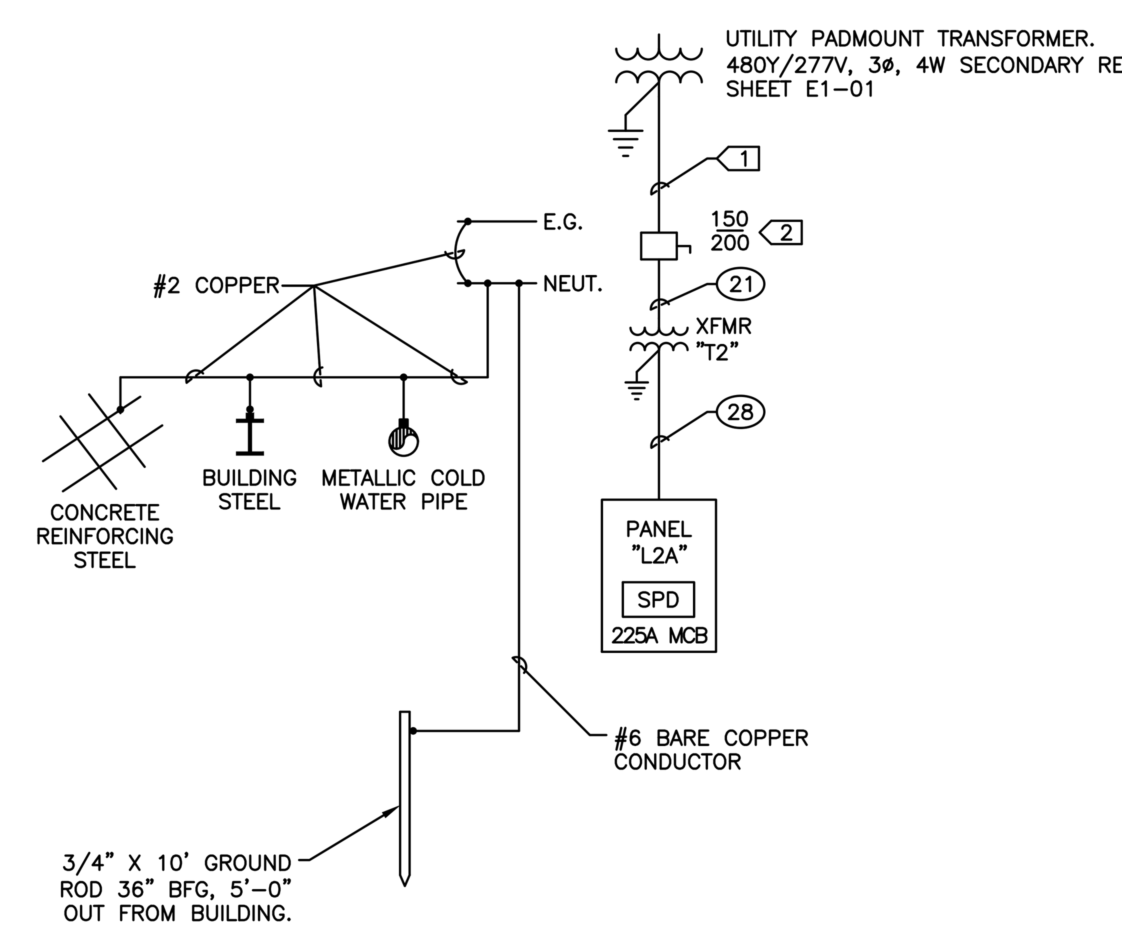

2 E4-01 ONE-LINE DIAGRAM - CONCESSIONS
NTS

LOAD TYPE LEGEND

- L = LIGHTING
- R = RECEPTACLES
- C = COMPUTERS
- M = MOTORS
- P = PANELS
- T = TRANSFORMERS
- O = OTHER
- F = FUTURE

PDG
PLANNING DESIGN GROUP
LANDSCAPE ARCHITECTURE • RECREATIONAL DESIGN • LAND PLANNING
5314 S. YALE AVE., SUITE 710, TULSA, OK 74135
918.628.1255 918.628.1256 FAX
WWW.PLANNINGDESIGNGROUP.COM

gsb
3555 NW 58TH Street
Suite 700-W
Oklahoma City, OK 73112
T: 405.848.9549
F: 405.848.9783
www.gsb-inc.com

Copyright ©2022 GSB, Inc

REGISTERED PROFESSIONAL ENGINEER
JULIAN DUANE HORNER
17193
06-03-22
OKLAHOMA

PROJECT INFORMATION

PROJECT ADDRESS:
1001 E. ROBINSON ST., NORMAN, OKLAHOMA 73071

PROJECT NO.	171511A
DATE	06/03/22
DRAWN BY	CHECKED BY
ADH	JDH

GRIFFIN SOCCER COMPLEX
PHASE 6
NORMAN, OKLAHOMA

ISSUE/ REVISIONS

NO.	DATE	DESCRIPTION

OWNER:
THE CITY OF NORMAN PARKS & RECREATION
201-C WEST GRAY
NORMAN, OK 73069
(405) 366-5472

BID SET

ONE-LINE DIAGRAM AND PANEL SCHEDULES

E4-01

DIVISION 16
SECTION 16000
ELECTRICAL SPECIFICATIONS

PART 1 - GENERAL

1.01 RELATED DOCUMENTS

A. The general provisions of the contract, including General and Special Conditions and General Requirements (if any), apply to the work specified in this section.

1.02 DESCRIPTION OF WORK

A. The Contractor shall furnish all labor, material, equipment, and related items necessary to complete the electrical work indicated on the drawings and described in these specifications. The work shall include all incidental electrical material or items as indicated or implied on the drawings and specifications, or as required in order to perform the work.

B. The work shall include, but is not limited to the following:
1. Temporary construction power
2. Feeders
3. Panelboards
4. Branch lighting and receptacle wiring
5. Wiring devices
6. Motor outlets and branch wiring
7. Lighting fixtures, including lamps

1.03 PLANS AND SPECIFICATIONS

A. The plans and specifications indicate the extent and general arrangement of the electrical systems to be installed, and are subject to the characteristics of the proposed equipment with regard to size, functionality, internal arrangement, etc. Should the Contractor consider any changes necessary, the desired changes shall be detailed and submitted with substantiating arguments to the Landscape Architect as soon as possible. No such changes shall be carried out without prior written approval of the Landscape Architect. The plans shall not be construed to give complete and accurate details in regard to exact locations of outlets, equipment, etc. Exact locations shall be determined based on the as-built measurements of the building, the purpose of the outlet, or function of the equipment. The Electrical Contractor shall lay out his work in such a way as to make provision for the work of all other trades. Offsets shall be made as necessary to avoid finished rooms, structural members, or other obstructions. The Contractor shall be responsible for accurately locating openings for conduits, busway, or access doors for electrical work, etc.

B. The Landscape Architect/Owner reserves the right to make any reasonable changes in equipment locations indicated on the contract documents without additional cost to the Owner.

C. Exceptions to the contract documents or conflicts between the drawings and specifications, or with actual field conditions, shall be promptly brought to the attention of the Landscape Architect. Failure to resolve conflicts of this nature, shall be reason to require suitable resolution and correction at the Contractor's expense before acceptance of the building.

1.04 CODES, PERMITS AND INSPECTIONS

A. All work shall comply with the applicable rules of the National Electrical Code, the National Electrical Safety Code, the National Fire Codes (published by National Fire Protection Association), the local codes and ordinances (state and municipal), and the terms and conditions of the electric utility, as well as any other authorities that may have lawful jurisdiction pertaining to the work specified. None of the terms or provisions of this specification shall be construed as waiving any of the rules, regulations or requirements of these authorities. The Contractor shall procure all necessary permits or licenses to carry out his work, and shall pay all required fees, including any costs associated with a certificate of approval.

B. In any instance where these specifications call for materials or construction of a better quality or larger size than required by the codes, the provisions of these specifications shall take precedence. The codes shall govern in case of direct conflict between the codes and the contract documents.

1.05 SUBMITTALS AND SHOP DRAWINGS

A. The Contractor shall submit for approval a set of PDF documentation describing all material and equipment to be provided. The information shall be indexed according to specification subsection or material type, and marked to indicate the exact model, type or size being provided. Materials specified on drawings shall be submitted as well as those specified in the specifications. Submittals shall indicate where the proposed equipment or material will be installed, and shall include sufficient manufacturer's information to demonstrate that the material is in accordance with specifications. Any material or equipment that is not in accordance with the specification requirements may be rejected solely at the Landscape Architect's discretion.

B. Submittals shall be complete and complete with all electrical components. Partial submittals will be returned to the Contractor for proper preparation and resubmission in complete form.

C. Submittals shall be accompanied by a letter of transmittal listing the information being submitted. The Contractor shall make all submittals in a timely manner to allow ample time for review, correction, resubmission and approval before construction begins. No work shall be fabricated and no material or equipment shall be purchased, except at the Contractor's risk, until such approval has been received.

D. Any equipment or material submitted which is not in accordance with the specification requirements because of standard shop practice or other reasons, shall be specifically noted in the letter of transmittal including all points of variance. If the submittals are not marked in this way, the Contractor remains responsible to execute his work in accordance with the contract documents even if such submittals are approved.

E. The approval of submittals indicates general compliance with the design concept, but shall not be considered as permitting any departure from the contract documents, or relieving the Contractor's responsibility for any errors in the submittal, such as in details, dimensions, materials, etc.

F. If requested, the Contractor shall provide samples of materials or equipment he proposes to furnish. Such samples shall remain the property of the Contractor and will be returned before contract close-out.

1.06 AS-BUILT DRAWINGS AND INSTRUCTIONAL MANUALS

A. Upon completion of the work, the Contractor shall provide to the Landscape Architect a set of instruction manuals on all equipment and systems provided. The information shall be bound in a vinyl hard cover three-ring binder with clear sleeves on front, back and spine. The information shall be logically indexed according to equipment type or system and shall include manufacturer's phone numbers and replacement part information.

B. Also provide a set of electrical drawings marked to indicate all changes made in the field during the progress of construction, including: underground conduit runs, device and equipment locations, circuiting changes, etc. Panel schedules and plans shall show the actual circuit number to which each circuit is connected.

1.07 VISIT SITE

A. The Contractor shall visit the site of the project before submitting a proposal, and shall thoroughly familiarize himself with existing conditions. Failure to do so will not be cause for any change to the contract price by reason of unforeseen conditions.

PART 2 - PRODUCTS

2.01 MATERIALS

A. All materials shall be new and bear the UL (Underwriters Laboratories, Inc.) or ETL (ETL Testing Laboratories) label. Equipment which is defective, or damaged in the course of installation or while being tested, shall be replaced or repaired in a manner satisfactory to the Landscape Architect. All materials and equipment furnished under this Division of the specifications shall be the standard product of a manufacturer regularly engaged in the production of such material, and shall be the manufacturer's current standard design.

2.02 ENCLOSURES FOR ELECTRICAL EQUIPMENT

A. Enclosures for electrical equipment such as motor controllers and MCC's, panelboards, contactors, push-button stations, selector switches, safety switches, circuit breakers, meter enclosures, junction boxes, etc., shall be suitable for the location in which they are installed. Enclosures shall undergo a thorough rust-inhibiting treatment followed by a suitable prime coat, and finished with a baked-on, light-gray enamel or epoxy powder coat.

B. Unless noted otherwise, enclosures shall be NEMA rated as follows for the environment indicated:
1. Indoors in clean, dry environments - NEMA 1
2. Indoors in dirty environments exposed to oil or water mist, dust, etc. - NEMA 12
3. Indoors in wet environments due to falling water such as deluge systems - NEMA 3R
4. Indoors in wet environments due to water spray or hose directed water - NEMA 4
5. Outdoors - NEMA 12/3R or NEMA 4
6. Corrosive environments whether indoors or outdoors - NEMA 4X

2.03 DISCONNECTING AND ISOLATION MEANS

A. Circuit breakers or safety switches shall be provided as indicated, or as required to comply with the N.E.C.

B. Non-fused safety switches shall be used as isolation disconnects for all motors, except for equipment requiring fuse protection or where fused disconnects are indicated on the plans. Single phase fractional horsepower motors shall be isolated by manual motor starter toggle switches with properly sized overload protection.

2.04 SAFETY SWITCHES

A. Safety switches shall be Heavy Duty, with quick-make, quick-break mechanism and shall meet NEMA Enclosed Safety Switch Standard KS1-1983 for type HD. Safety switches shall be 600V or 250V three-pole, single throw with grounding lug unless noted otherwise.

2.05 OUTLET BOXES, JUNCTION BOXES, PULL BOXES AND CABINETS

A. Junction boxes, outlet boxes, pull boxes and cabinets shall conform to NEC requirements and shall be suitable for the environment in which they are installed.

B. Device Boxes: Provide pressed cadmium-plated or zinc-coated sheet steel type boxes for concealed conduit systems. Provide cast alloy FS/FD boxes for exposed work, and "Bell Boxes" in damp or wet locations. Provide masonry boxes installed flush in CMU. All boxes shall be sized with sufficient volume to accommodate the device(s) and number of conductors entering the box as required by the National Electrical Code. Boxes shall be not less than 1-1/2" deep. Switch and receptacle boxes shall be not less than 3"H x 2"W x 2"D. Telephone/data boxes shall be 4" square x 2-1/8" deep with a single gang device ring. Boxes installed in concealed locations shall be set flush with the finished surfaces and shall be provided with the proper type device rings as required. Boxes shall be rigidly and securely installed using bar hangers between studs, wood screws for wood construction, bolts and wedge anchors for concrete or brick, toggle bolts for concrete masonry units (CMU), or machine screws or welded threaded studs for steel construction. Powder charge driven threaded studs provided with lock washers and nuts are acceptable for masonry, brick or steel.

C. Junction Boxes, Pull Boxes and Cabinets: Boxes and cabinets shall be of suitable size and type to accommodate structural requirements, terminating space, number of raceways and conductors or cables being installed. Boxes and cabinets shall not be smaller than indicated on the drawings, or as required by the N.E.C. where sizes are not given.

2.06 CONDUIT SYSTEMS

A. The conduit system shall consist of rigid galvanized steel conduit (RGSC), electrical metallic tubing (EMT), PVC coated galvanized rigid steel conduit, rigid PVC conduit, flexible metallic conduit and liquidtight flexible metallic conduit. Conduit shall be installed as shown on the drawings and in accordance with the N.E.C. Minimum conduit size shall be 3/4 inch trade size. All fittings for rigid steel conduit shall be threaded, and EMT fittings shall be raintight steel compression or set-screw type. Indentation type fittings will be not be permitted.

B. Exposed conduit subject to damage shall be rigid galvanized steel, while exposed conduit not subject to damage may be electrical metallic tubing. All exposed conduit shall be secured to the structure according to the N.E.C. Install exposed conduit parallel or perpendicular to the building lines. Conduits shall be secured at all sheet steel boxes and cabinets with locknuts on each side of the box. Bushings shall be provided for all RGSC terminations and where required by the N.E.C.

C. Conduit shall be routed concealed above ceilings, in stud or masonry walls, or under concrete floors wherever possible, unless noted otherwise. Electrical metallic tubing may be used concealed except in direct contact with earth or in poured concrete. In poured concrete and direct contact with earth provide rigid PVC schedule 40 conduit .

D. Conduit shall be installed with not more than four ninety degree bends, or equivalent, between pull points. Pull points shall also be provided at not more than one hundred feet of run, unless noted otherwise. Ninety degree bends shall be accomplished using preformed sweeps, field made symmetrical bends or cast-alloy "condulet" fittings. Special care shall be taken when field bending PVC coated RGSC, and the manufacturer's recommendations for bending equipment and procedures shall be strictly followed. Conduit that has been crushed or deformed shall not be installed. Conductors shall not be installed until the conduit system is complete, and all conductors shall be pulled together at one time. The Contractor shall exercise the necessary precautions to prevent the entrance of water, dirt, concrete or other debris into the conduits. Debris shall be cleared from conduits before installation of conductors. If conduit becomes obstructed so that it can not be completely cleared, replace the obstructed section of conduit.

E. Flexible metallic conduit shall be used only for final connection of equipment, grid mounted lighting fixtures, or where specifically called for on the drawings. All equipment subject to vibration shall be connected with flexible conduit. Other equipment may be connected with flexible conduit for the sake of convenience. Provide liquid-tight flexible metallic conduit in all damp or wet locations, where subject to water or oil spray, or where specifically called for on the drawings.

2.07 WIRING

A. All wiring shall be installed in conduit. Building wire shall be copper with 600V, type THHN/THWN (rated 90°C dry and 75°C wet) or THHN/THWN-2 (rated 90°C dry or wet) insulation.

B. Exterior underground conductors shall be installed in conduit and shall be copper with 600V, type THHN/THWN (rated 90°C dry and 75°C wet), THHN/THWN-2 (rated 90°C dry or wet), XHHW (rated 75°C wet), or XHHW-2 (rated 90°C wet).

C. Type "MC" Cable with full sized ground conductor, THHN (90C) copper for dry locations (600V) may be used only within millwork and as fixture whips above lay-in ceilings not to exceed 6' in length. "MC" cable is disapproved for all other uses.

D. Branch circuit conductors shall be not smaller than No. 12 AWG. Class 1 remote control and signal circuit conductors shall be not less than No. 14 AWG. Class 2 low-energy remote control and signal circuit conductors shall be not less than No. 16 AWG.

E. Conductors shall be continuous from outlet to outlet with no splices except in outlet or junction boxes. Junction boxes shall be utilized where required. Splices in conductors No. 8 and smaller shall be made with 600V insulated "Scotchlok", or equal, twist-on spring connectors, or with 600V insulated copper sleeve crimp connectors. Splices in conductors No. 6 or larger shall be made with bronze split bolt solderless connectors of the proper size and insulated with two layers of rubber or plastic tape to provide insulation equivalent to that on the conductors spliced. Split bolts may also be insulated with proper size snap-on Bakelite covers. Plastic tape shall be 8.5 mil all weather flame retardant vinyl-plastic tape approved by U.L.

2.08 WIRING DEVICES AND PLATES

E. The Contractor shall evaluate the device locations shown on the plans based on type of construction, work by other trades and the intended purpose of the device in order to coordinate the overall effort of the project. Based on this evaluation the Contractor shall recommend to the Landscape Architect any relocation of devices he deems beneficial, stating the reason for each relocation.

F. Color of wiring devices and cover plates shall be white.

G. Provide Type "TR" and "WR" devices where required by the N.E.C. and A.H.J.

H. Duplex receptacles shall be wide body industrial specification grade, NEMA 5-20R with one piece grounding backstrap and integral ground contacts having a single rivet and green hexagonal ground screw. Receptacles shall accept side or back wiring and shall be gray in color. Provide Hubbell #HBL5362, Leviton #5362 or approved equal.

I. Ground Fault Circuit Interrupting Duplex: Provide heavy duty specification grade, NEMA 5-20R duplex receptacles with integral personnel ground fault protection. Receptacles shall be capable of protecting downstream devices from ground fault. Provide Hubbell #GF20"L or approved equal. GFCI devices shall conform to the latest UL requirements.

J. Wall mounted toggle switches shall be wide body industrial specification grade, single pole quiet type, rated 20 amperes at 120/277 volts AC. Switches shall accept side or back wiring. Device color shall be gray and shall be equal to Hubbell #HBL1221 or Leviton #1221.

K. Device plates in finished areas shall be one-piece, #302 stainless steel, secured by stainless steel screws with countersunk heads. Device plates in unfinished areas with surface mounted boxes shall be of one-piece construction and shall be of the same material as the box, cast alloy plates shall be provided for cast boxes and zinc-coated sheet steel covers with rounded or beveled edges for sheet steel boxes. All multiple mounted devices shall be ganged under one cover plate unless otherwise noted on the drawings. All devices shall be attached to the outlet box and shall not depend upon the cover plate for support. The use of section plates will not be permitted.

2.09 MOTOR CONTROL AND PROTECTION

A. Provide motor overload protection for all motors except those which are part of packaged equipment having overload protection provided by the equipment manufacturer. Provide a safety disconnecting means for each motor as specified.

B. Motor control shall be provided as indicated on the drawings. Magnetic motor starters shall be NEMA rated and shall not be smaller than size 1. Provide properly sized magnetic motor starters with integral disconnect, instantaneous trip motor circuit protector, thermal overload relays, 120 VAC control power transformer having primary and secondary fuses, 1 N.O. and 1 N.C. unused auxiliary contacts, red "run" and green "stop" pilot lights, Hand-Off-Auto switch mounted on the cover and enclosure suitable for the installation environment. Pilot lights shall be wired through auxiliary contacts.

C. Provide manual motor starters having motor overload protection for all single phase fractional horsepower motors, unless noted otherwise.

2.10 PANELBOARDS AND CIRCUIT BREAKERS

A. The panelboards shall be circuit breaker type, dead-front with tin plated copper bus bars and straps. Equip panelboards with main disconnecting device or lugs as described and shown on drawings. Provide separate solid neutral bus and equipment ground bus for all panels, unless noted otherwise. Provide all indicated branch circuit breakers shown on the drawings.

B. Twin, tandem and half-size single pole breakers are not acceptable. All multiple pole breakers shall be common trip.

B. Provide a neatly typed directory card properly identifying each circuit and corresponding load served. Install directory card on inside of panel door in a clear plastic holder.

C. All circuit breakers and panelboard enclosures shall comply with the applicable provisions of the N.E.C. All panelboards shall be provided with a hinged door having a keyed latch, and shall be keyed alike. Enclosures shall undergo a thorough rust-inhibiting treatment followed by a suitable prime coat, and finished with a baked-on, light-gray enamel or epoxy powder coat. The enclosure, covers and trim shall be designed for flush or surface mounting as indicated on the drawings.

D. Provide each panelboard rated as a complete unit equal to or greater than the symmetrical amps interrupting rating shown in the panelboard schedules, or as required to exceed available fault current.

2.11 LIGHTING FIXTURES

A. The Contractor shall furnish and install all electric lighting fixtures as scheduled on the drawings, complete with lamps. Fixtures shall be U.L. approved. Fixtures shall be supplied by the manufacturers indicated. Fixtures other than those specified must receive the approval of the Landscape Architect/Owner before purchase. It shall be the responsibility of the Contractor to furnish the proper ceiling frames for the ceiling material in which recessed fixtures are to be installed. All lamps broken or burned out during the course of construction shall be replaced without additional cost to the Owner.

2.12 LIGHTING POLES

A. Area light poles shall be steel or aluminum as called for on the drawings.

B. Provide a handhole with removable weatherproof cover located near the bottom of the pole.

C. Provide pole top mounting arrangement to meet the requirements of luminaires specified.

D. Poles shall undergo a thorough rust-inhibiting treatment followed by a suitable prime coat, and finished with a baked-on, light-gray enamel or epoxy powder coat.

E. Provide four anchor bolts per pole, size and length as required to meet structural requirements, bent on one end and threaded on the other end tomeet installation requirements. Provide flat washers, lock washers and hexagonal nuts for each pole. Provide template for positioning anchor bolts.

F. Construct bases of concrete with dimensions as detailed on the drawing or per structural requirements and manufacturer's recommendations. Install anchor bolts with minimum 4" projection above top of bases.

2.13 ELECTRICAL IDENTIFICATION

A. All electrical equipment shall be identified with a permanent nameplate installed with suitable adhesive. Nameplates shall be engraved with the name or legend as indicated on the drawings and approved by the Landscape Architect.

B. Nameplates shall be laminated bakelite or plastic with black core and white face. All nameplates shall be of the same type with the same style engraving.

C. Receptacles and switches shall be identified by panelboard and circuit number using a clear machine lettered adhesive tape with 1/8" black letters. Affix near the bottom of the cover plate on the exterior face.

D. Underground conduit shall be marked with detectable marker tape denoting the type of installation (electric, communications, etc.). Tape shall be set 6" to 12" below finished grade.

PART 3 - EXECUTION

3.01 CONTINUITY OF ELECTRICAL SERVICE

A. Continuity of electrical power to all areas shall be maintained at all times unless otherwise arranged with the Owner.

B. B. Provide either new or used materials and equipment for electrical temporary facilities which are suitable for intended uses and will ensure safe, adequate performance of the facilities in accordance with governing regulations and codes.

3.02 DEMOLITION

B. All salvaged electrical materials which are not reused, shall become the property of the Owner. All abandoned conduit shall be removed except conduit in masonry or concrete. Conduits left in walks or floors shall be cut off flush and end grouted.

C. The Contractor shall remove all material not retained by the Owner and all debris from the site.

D. Where the demolition work renders equipment downstream inoperable, service shall be extended to the downstream devices or equipment so that they are left in operating condition.

3.03 CUTTING AND PATCHING

A. All necessary cutting of walls, floors, partitions, ceilings, etc., as required for the proper installation of electrical work shall be accomplished at the Contractor's expense, and shall be done in a neat, careful and workmanlike manner. Contractor shall patch all holes, trenches, etc., associated with his work to provide a smooth and level substrate for finishing.

3.04 TEMPORARY POWER

A. The Contractor shall furnish and install temporary electric service as required for construction activities. Services shall include, temporary single phase service for fractional horsepower motors and power saws, and temporary GFCI protected convenience outlets. Convenience outlets shall be spaced so that every part of the building is within 50 feet of an outlet.

B. Provide adequate temporary lighting in all areas per O.S.H.A. requirements.

3.05 GROUNDING

A. Properly ground the raceway system, and all electrified equipment in accordance with the requirements of the National Electrical Code.

B. Establish the grounded conductor (neutral) for the electrical system at the service entrance equipment. Install a properly sized grounding electrode conductor from the main service entrance neutral bus to the nearest cold water piping, building structural steel and a 3/4" x 10' copper-clad steel driven ground rod or building counterpoise if present. Install a properly sized main bonding jumper between the neutral bus and equipment ground bus at the main service entrance equipment only.

C. Provide green insulated equipment ground conductors with all power and lighting circuits, sized in accordance with the National Electrical Code.

D. Connect all equipment ground conductors to the ground bus and neutral conductors to the neutral bus at the point of origination for each circuit. All grounding paths shall be continuous back to the service entrance equipment.

3.06 COORDINATION

A. The electrical work shall be coordinated with the requirements of the other divisions of these specifications and with all the drawings for the entire project. The electrical work shall be properly coordinated and accomplished on such a schedule and in such a manner as not to delay or interfere with the work of other trades. Workmanship shall be of the highest grade and shall be accomplished in accordance with the best practices of the trade. In case of conflict with other trades, the General Contractor shall decide, subject to the Landscape Architect's approval, which equipment or work shall be relocated regardless of which was installed first.

3.07 CONNECTIONS TO EQUIPMENT FURNISHED BY OTHERS

A. Furnish rough-in, including necessary labor and materials, for all equipment indicated on the drawings of all disciplines or specified elsewhere in all divisions of these specifications. Final connection to equipment shall be provided if equipment is installed before acceptance of the building.

B. Contractor shall verify sizes and requirements of actual equipment supplied against what is shown on the drawings and determine the suitability of the electrical service and controls indicated. If the equipment provided is different in size, or has different control or other requirements, the Contractor shall provide the appropriate service and controls.

3.08 TESTS

A. The entire electrical system shall be tested by the Contractor in the presence of the Landscape Architect. Every switch, circuit breaker, and safety switch shall be operated under load conditions. Every fixture shall be lighted, every receptacle tested, every motor exercised, and all special outlets and equipment tested and operated. Any short circuits or defects in workmanship, material or equipment shall be corrected by the Contractor before final acceptance.

3.09 ACCEPTANCE

A. Acceptance of the work will be given after completion, final adjustment and successful demonstration of all systems.

3.10 GUARANTEE

A. The Contractor shall guarantee the electrical system, including all equipment and material, as installed by him or his subcontractors to function as specified for a period of one year from the date of acceptance. The Contractor shall furnish free of cost to the Owner all material, labor, and other expenses as necessary to correct any defective equipment, material or workmanship.

END OF SECTION

BID SET

PDG
PLANNING DESIGN GROUP
LANDSCAPE ARCHITECTURE ● RECREATIONAL DESIGN ● LAND PLANNING
5314 S. YALE AVE., SUITE 710, TULSA, OK 74135
918.628.1255 918.628.1256 FAX
WWW.PLANNINGDESIGNGROUP.COM

gsb inc
3555 NW 58TH Street
Suite 700-W
Oklahoma City, OK 73112
T: 405.848.9549
F: 405.848.9783
www.gsb-inc.com

Copyright ©2022 GSB, Inc

REGISTERED PROFESSIONAL ENGINEER
JULIAN DUANE HORNER
17193
06-03-22
OKLAHOMA

PROJECT INFORMATION

PROJECT ADDRESS:

1001 E. ROBINSON ST.,
NORMAN, OKLAHOMA 73071

PROJECT NO.	171511A
DATE	06/03/22
DRAWN BY	CHECKED BY
ADH	JDH

GRIFFIN SOCCER COMPLEX
PHASE 6
NORMAN, OKLAHOMA

ISSUE/ REVISIONS

NO.	DATE	DESCRIPTION

OWNER:
THE CITY OF NORMAN PARKS & RECREATION
201-C WEST GRAY
NORMAN, OK 73069
(405) 366-5472

SPECIFICATIONS SHEET

E5-01

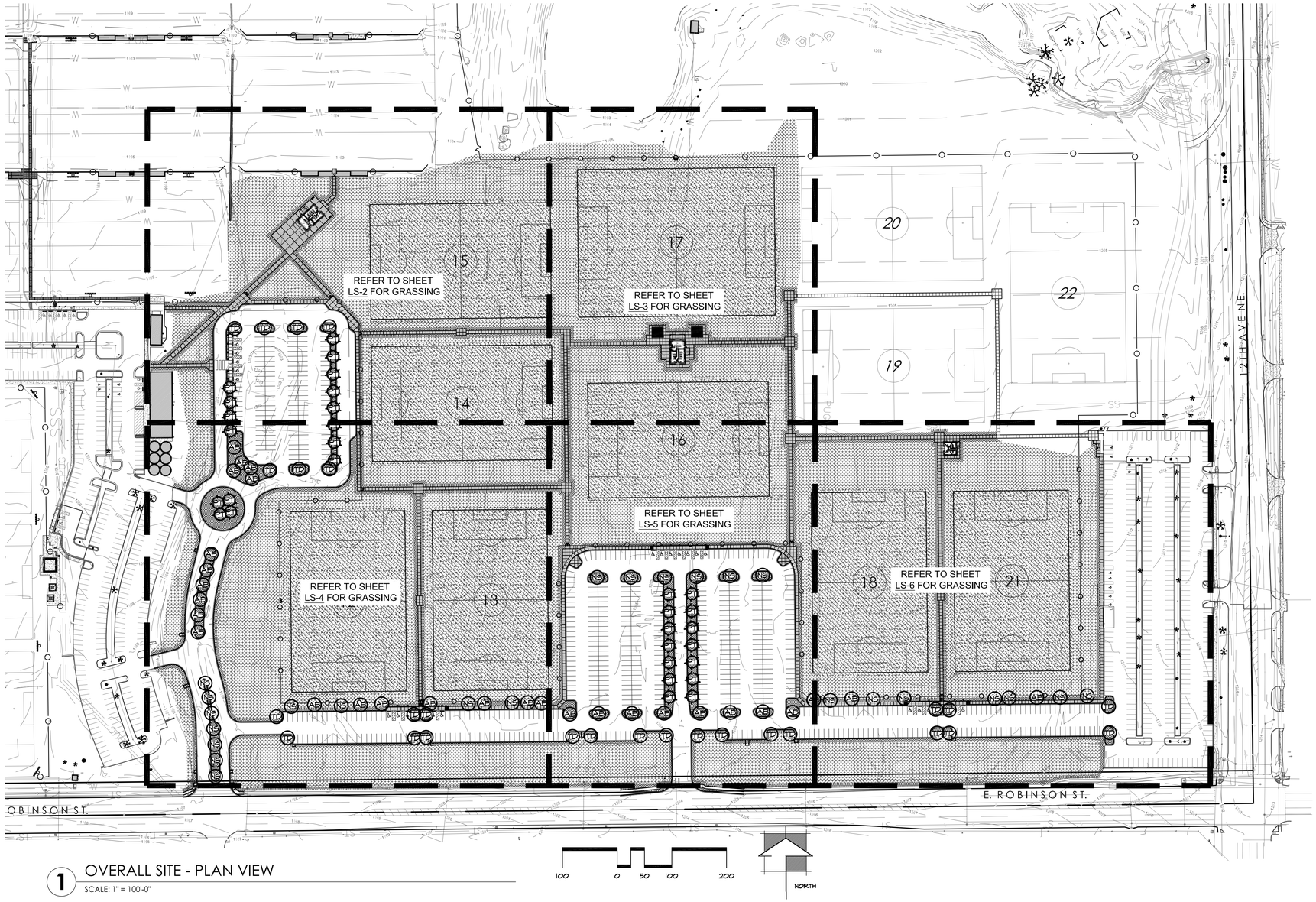

1 OVERALL SITE - PLAN VIEW

SCALE: 1" = 100'-0"

GRASSING LEGEND

SYMBOL	DESCRIPTION	QTY
	SOD U3 BERMUDA	131,434 SF
	SPRIGS U3 BERMUDA	627,200 SF
	HYDROMULCH U3 BERMUDA	515,571 SF

SODDING SUMMARY NOTES

1. REFER TO PROJECT MANUAL FOR FURTHER SPECIFICATIONS.
2. ALL NETTING TO BE REMOVED FROM SOD DURING INSTALLATION.
3. FINE GRADE LAWN AREAS TO SMOOTH, EVEN SURFACE WITH A LOOSE, UNIFORMLY FINE TEXTURE. FLOAT SMOOTH TO REMOVE RIDGES AND FILL DEPRESSIONS AS REQUIRED TO REMOVE RIDGES AND FILL DEPRESSIONS AS REQUIRED TO DRAIN.
4. APPLY APPROVED FERTILIZER ON FINISH GRADE PRIOR TO SOD INSTALLATION AT A RATE OF ONE (1) POUND OF ACTUAL NITROGEN PER 1000 SQUARE FEET.
5. ON 3:1 SLOPES OR GREATER SOD SHALL BE INSTALLED PERPENDICULAR TO SLOPE AND SECURED WITH APPROVED WOOD STAKES AS NEEDED TO PREVENT SOD FROM SLOUGHING OFF SLOPES.
6. THE SITE IS TO BE KEPT CLEAN AND ORDERLY. ALL TRASH, INCLUDING DEBRIS FROM REMOVING WEEDS OR ROCKS FROM SODDED AREAS, SHALL BE REMOVED FROM THE SITE AS WORK PROGRESSES. ALL PAVED AREAS SHALL BE KEPT CLEAN BY HOSING AND/OR SWEEPING.
7. CONTRACTOR IS RESPONSIBLE FOR SOLID SODDING ALL AREAS DISTURBED DURING CONSTRUCTION OPERATIONS.
8. LAY BERMUDA SOD TO FORM A SOLID MASS TIGHTLY-FITTED JOINTS. DO NOT OVERLAY EDGES. STAGGER STRIPS TO OFFSET JOINTS IN ADJACENT COURSES.
9. WATER SOD LIGHTLY AND THEN ROLL WITH A WATER FILLED LAWN ROLLER TO ENSURE CONTACT WITH SUBGRADE AND TO INSURE A SMOOTH SURFACE FREE OF CLUMPS AND DEPRESSIONS.
10. ALL AREAS NOT SHOWN ON PLAN THAT ARE DISTURBED DURING CONSTRUCTION ARE TO BE SOLID SODDED WITH U3 SOD. CONSULT LANDSCAPE ARCHITECT FOR APPROVAL BEFORE SODDING ANY ADDITIONAL AREAS NOT INDICATED ON THIS PLAN.

SPRIGGING SUMMARY NOTES

1. REFER TO PROJECT MANUAL FOR FURTHER SPECIFICATIONS.
2. ALL CLEAN-UP AND FINISH GRADING SHALL BE COMPLETED BY THE CONTRACTOR AND APPROVED BY LANDSCAPE ARCHITECT.
3. WHERE PRACTICAL OR NECESSARY, MECHANICAL SPRIGGING SHALL BE PERPENDICULAR TO THE SLOPES IN ORDER TO MINIMIZE EROSION IN THESE AREAS. MOUNDS, SOIL AROUND TREE TRUNKS, SLOPES, OR ANY OTHER AREAS THAT DO NOT LEND THEMSELVES TO MECHANICAL SPRIGGING SHALL BE HAND PLANTED. STOLONS SHALL BE BROADCAST EVENLY OVER THESE AREAS AND CHOPPED IN LIGHTLY BY SHOVEL, HOE OR OTHER HAND TOOL WHICH LEAVES THE GRADE UNCHANGED.
4. CARE SHALL BE TAKEN NOT TO DISTURB THE NATURAL GRASSES IN THE AREAS ADJACENT TO THE WORK ZONE WHICH HAD NOT BEEN DISTURBED BY THE GRADING OPERATION.
5. THE LANDSCAPE ARCHITECT WILL BE THE FINAL JUDGE AS TO THE CONDITION OF ALL PLANTED AREAS AFTER SPRIGGING.
6. SPRIGS SHALL BE FREE FROM PESTS AND DISEASE, DELIVERED IN A TIMELY FASHION AND CONSIST OF STEM, LEAVES AND STOLONS. THE SPRIGS SHALL COME FROM A NURSERY APPROVED BY THE LANDSCAPE ARCHITECT. CONTRACTOR SHALL PROVIDE AND PLANT THE GRASS SPRIGS BY SHREDDING THE GRASS AT THE TIME OF HARVEST AND BY DELIVERING IT TO THE SITE WITHIN 24 HOURS AFTER HARVESTING AND HAVING IT PLANTED IN THE GROUND WITHIN 48 HOURS AFTER IT HAS BEEN HARVESTED. THE GRASS SHALL BE PLANTED BY BROADCASTING AND THE SPRIGS SHALL BE PLACED INTO THE GROUND WITH A STRAIGHT-DISC TYPE PLANTER CUSTOMARILY USED IN SPRIGGING APPLICATIONS. ALL AREAS SHALL BE ROLLED CUSTOMARILY USED IN ROLLER AFTER PLANTING. STOLONS SHOULD NOT HAVE A LENGTH LONGER THAN 1 ½ INCHES PER STOLON. U3 BERMUDAGRASS SHALL BE SPRIGGED AT A RATE OF NO LESS THAN 400 BUSHELS PER ACRE.
7. CONTRACTOR TO PROVIDE SPRIG GROW-IN. REFER TO SPECIFICATIONS FOR ADDITIONAL INFORMATION.

SOIL AMENDMENT NOTES

1. CONTRACTOR IS TO SPREAD ½" OF DARK FOREST COMPOST AND 1" OF MASONRY OR TOP-DRESSING SAND OVER ALL AREAS AS LISTED IN APPLICATION INFORMATION BELOW.
2. CONTRACTOR IS TO TILL DARK FOREST COMPOST AND SAND INTO TOP 4"-6" OF SOIL.
3. CONTRACTOR IS TO SUBMIT ALL INFORMATION ON DARK FOREST COMPOST AND SAND AS PART OF A SUBMITTAL PACKAGE. THIS IS TO INCLUDE ALL MANUFACTURERS PRODUCT INFORMATION AND SOURCE OF MATERIAL.

PRODUCT INFORMATION

SOIL AMENDMENT
DARK FOREST COMPOST OR APPROVED EQUAL

MINICK MATERIALS
6665 NORTH INTERSTATE DR.
NORMAN, OK
TIM SHANAHAN
PH: 405-834-8280
WWW.MINICKMATERIALS.COM

PRODUCT APPLICATION

DARK FOREST COMPOST
-168 CUBIC YARDS

MASONRY SAND OR TOP DRESSING SAND
-2,904 TONS

APPLY TO EACH FIELD AREA AND 5' SURROUNDS
- 220' X 340' APPROXIMATE AREA

NOTE: FOR ALL TREE INFORMATION RE: LS-1

CITY OF NORMAN LANDSCAPE ORDINANCE TABLE

TREE AND SHRUB REQUIREMENTS

1. **INTERIOR LANDSCAPE REQUIREMENTS:**
   15 SF OF LANDSCAPING FOR EACH PARKING SPACE, MINUS SPACES ABUTTING PERIMETER LANDSCAPING.

15 SF X 728 PARKING SPACES =	10,920 SF OF TOTAL REQUIRED LANDSCAPING
TOTAL LANDSCAPE PROVIDED =	0 SF (REQUESTING VARIENCE)
10,920 S.F / 100 =	104 TREES
TOTAL TREES PROVIDED =	110 TREES

LANDSCAPE MATERIAL LIST

KEY	QUAN.	MATERIAL NAME	SIZE/REMARK	TYPE
AB	24	ACER BUERGERIANUM Trident Maple	10'-15' H. 2"-3" CAL.	B&B
NS	27	NYSSA SYLVATICA Black Gum	10'-15' H. 2"-3" CAL.	B&B
PT	30	PINUS TAEDA Loblolly Pine	10'-15' H. 2"-3" CAL.	B&B
TD	24	TAXODIUM DISTICHUM Bald Cypress	10'-15' H. 2"-3" CAL.	B&B
MULCH	110	Cedar Mulch	3 C.F.	1 BAG
COMPOST	55	Back To Nature	3 C.F.	1 BAG

H:HEIGHT, S:SPREAD CAL:CALIPER, O.C.: ON CENTER (Approximate), B&B:BALLED & BURLAPPED
GAL:GALLON, A: ALTERNATE NUMBER ONE

THE MATERIAL LIST IS PROVIDED FOR THE CONTRACTOR'S CONVENIENCE. THE LANDSCAPE CONTRACTOR IS RESPONSIBLE FOR FIGURING ALL QUANTITIES FROM THE PLANTING PLAN AND COVERAGES FOR ALL BED AREAS. WHEN DISCREPANCIES OCCUR BETWEEN THE MATERIAL LIST AND THE PLANTING PLAN, THE PLANTING PLAN SUPERSEDES THE MATERIAL LIST IN ALL CASES. THE LANDSCAPE CONTRACTOR WILL BE RESPONSIBLE FOR ALL PLANTS AND COVERAGE OF BED AREAS ON THE PLANTING PLAN.

GENERAL LANDSCAPE NOTES

H:HEIGHT, S:SPREAD CAL:CALIPER, O.C.: ON CENTER, B&B:BALLED & BURLAPPED, GAL:GALLON, ABH: AT BREAST HEIGHT
THE MATERIAL LIST IS PROVIDED FOR THE CONTRACTOR'S CONVENIENCE. THE LANDSCAPE CONTRACTOR IS RESPONSIBLE FOR FIGURING ALL QUANTITIES FROM THE PLANTING PLAN AND COVERAGES FOR ALL BED AREAS. WHEN DISCREPANCIES OCCUR BETWEEN THE MATERIAL LIST AND THE PLANTING PLAN, THE PLANTING PLAN SUPERSEDES THE MATERIAL LIST IN ALL CASES. THE LANDSCAPE CONTRACTOR WILL BE RESPONSIBLE FOR ALL PLANTS AND COVERAGE OF BED AREAS ON THE PLANTING PLAN. TREES IN THE LANDSCAPE MATERIAL LIST ARE TO BE OBTAINED FROM SPECIFIC VENDORS OR APPROVED EQUAL; REFER TO APPROVED VENDER LIST BELOW.

TREE NOTES

1. ALL TREES TO BE WATERED WITH SLOW DRIP 20 GALLON WATERING BAG. CONTRACTOR TO INCLUDE WATERING BAGS IN BID. CONTRACTOR RESPONSIBLE FOR INSTALLING WATERING BAGS.

PDG
PLANNING DESIGN GROUP
LANDSCAPE ARCHITECTURE • RECREATIONAL DESIGN • LAND PLANNING
5314 S. YALE AVE., SUITE 710, TULSA, OK 74135
918.628.1255 918.628.1256 FAX
WWW.PLANNINGDESIGNGROUP.COM

REGISTERED LANDSCAPE ARCHITECT
JAMES C. CROSBY
1 2 1
OKLAHOMA
4-29-22

JAMES C. CROSBY, ASLA
LANDSCAPE ARCHITECT OF RECORD

PROJECT INFORMATION	
PROJECT ADDRESS:	
1001 E. ROBINSON ST., NORMAN, OKLAHOMA 73071	
PROJECT NO.	NA
DATE	04/29/22
DRAWN BY	CHECKED BY
AB	GE

GRIFFIN SOCCER COMPLEX
PHASE 6
NORMAN, OKLAHOMA

ISSUE/ REVISIONS	
06/03/22	BID SET

OWNER:
THE CITY OF NORMAN PARKS & RECREATION
201-C WEST GRAY
NORMAN, OK 73069
(405) 366-5472

LS-1

OVERALL GRASSING AND SITE TREE PLAN

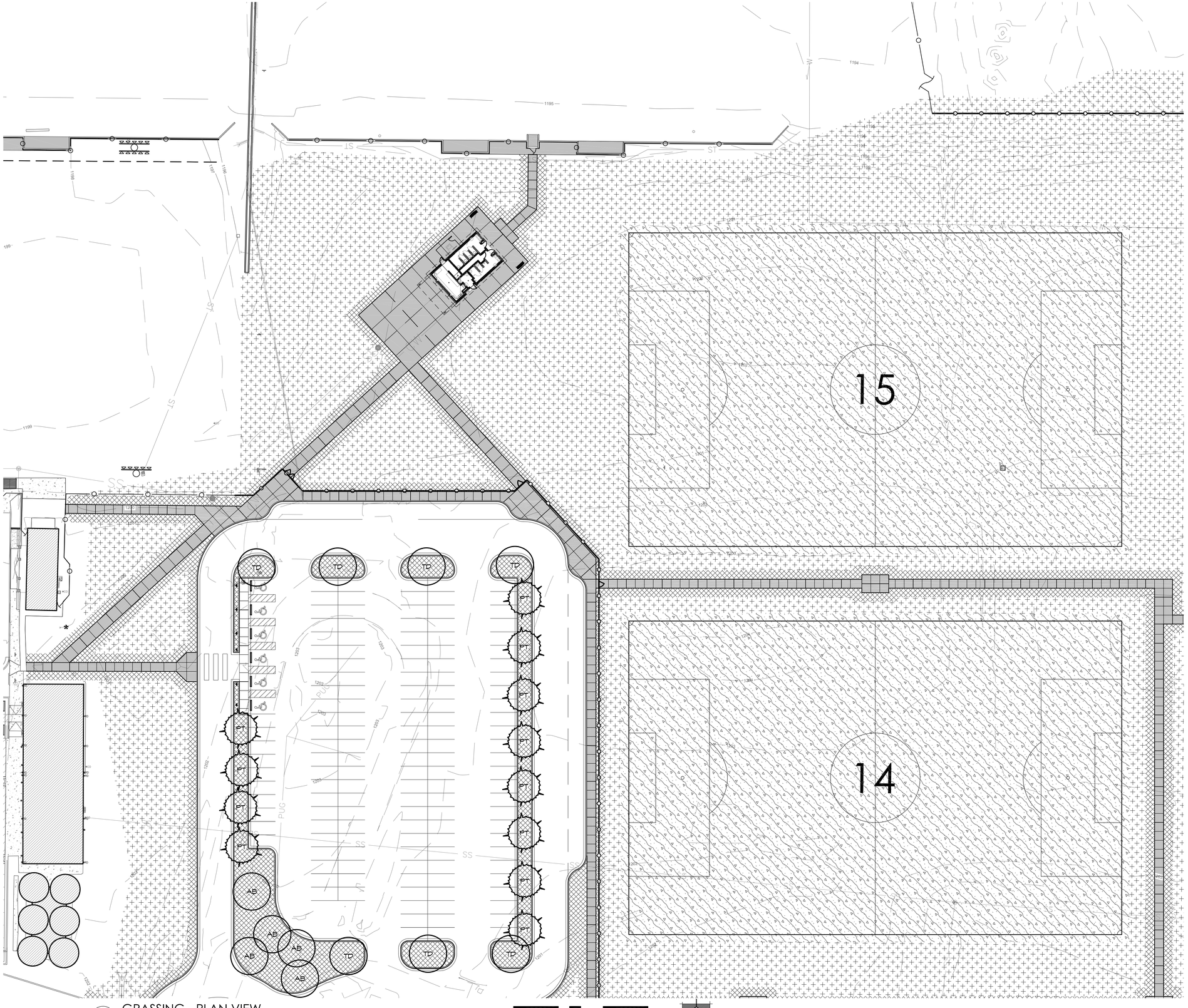

1 GRASSING - PLAN VIEW

SCALE: 1" = 30'-0"

30 0 15 30 60

NORTH

GRASSING LEGEND

SYMBOL	DESCRIPTION	QTY
	SOD U3 BERMUDA	131,434 SF
	SPRIGS U3 BERMUDA	627,200 SF
	HYDROMULCH U3 BERMUDA	515,571 SF

SODDING SUMMARY NOTES

1. REFER TO PROJECT MANUAL FOR FURTHER SPECIFICATIONS.
2. ALL NETTING TO BE REMOVED FROM SOD DURING INSTALLATION.
3. FINE GRADE LAWN AREAS TO SMOOTH, EVEN SURFACE WITH A LOOSE, UNIFORMLY FINE TEXTURE. FLOAT SMOOTH TO REMOVE RIDGES AND FILL DEPRESSIONS AS REQUIRED TO REMOVE RIDGES AND FILL DEPRESSIONS AS REQUIRED TO DRAIN.
4. APPLY APPROVED FERTILIZER ON FINISH GRADE PRIOR TO SOD INSTALLATION AT A RATE OF ONE (1) POUND OF ACTUAL NITROGEN PER 1000 SQUARE FEET.
5. ON 3:1 SLOPES OR GREATER SOD SHALL BE INSTALLED PERPENDICULAR TO SLOPE AND SECURED WITH APPROVED WOOD STAKES AS NEEDED TO PREVENT SOD FROM SLOUGHING OFF SLOPES.
6. THE SITE IS TO BE KEPT CLEAN AND ORDERLY. ALL TRASH, INCLUDING DEBRIS FROM REMOVING WEEDS OR ROCKS FROM SODDED AREAS, SHALL BE REMOVED FROM THE SITE AS WORK PROGRESSES. ALL PAVED AREAS SHALL BE KEPT CLEAN BY HOSING AND/OR SWEEPING.
7. CONTRACTOR IS RESPONSIBLE FOR SOLID SODDING ALL AREAS DISTURBED DURING CONSTRUCTION OPERATIONS.
8. LAY BERMUDA SOD TO FORM A SOLID MASS TIGHTLY-FITTED JOINTS. DO NOT OVERLAY EDGES. STAGGER STRIPS TO OFFSET JOINTS IN ADJACENT COURSES.
9. WATER SOD LIGHTLY AND THEN ROLL WITH A WATER FILLED LAWN ROLLER TO ENSURE CONTACT WITH SUBGRADE AND TO INSURE A SMOOTH SURFACE FREE OF CLUMPS AND DEPRESSIONS.
10. ALL AREAS NOT SHOWN ON PLAN THAT ARE DISTURBED DURING CONSTRUCTION ARE TO BE SOLID SODDED WITH U3 SOD. CONSULT LANDSCAPE ARCHITECT FOR APPROVAL BEFORE SODDING ANY ADDITIONAL AREAS NOT INDICATED ON THIS PLAN.

SPRIGGING SUMMARY NOTES

1. REFER TO PROJECT MANUAL FOR FURTHER SPECIFICATIONS.
2. ALL CLEAN-UP AND FINISH GRADING SHALL BE COMPLETED BY THE CONTRACTOR AND APPROVED BY LANDSCAPE ARCHITECT.
3. WHERE PRACTICAL OR NECESSARY, MECHANICAL SPRIGGING SHALL BE PERPENDICULAR TO THE SLOPES IN ORDER TO MINIMIZE EROSION IN THESE AREAS. MOUNDS, SOIL AROUND TREE TRUNKS, SLOPES, OR ANY OTHER AREAS THAT DO NOT LEND THEMSELVES TO MECHANICAL SPRIGGING SHALL BE HAND PLANTED. STOLONS SHALL BE BROADCAST EVENLY OVER THESE AREAS AND CHOPPED IN LIGHTLY BY SHOVEL, HOE OR OTHER HAND TOOL WHICH LEAVES THE GRADE UNCHANGED.
4. CARE SHALL BE TAKEN NOT TO DISTURB THE NATURAL GRASSES IN THE AREAS ADJACENT TO THE WORK ZONE WHICH HAD NOT BEEN DISTURBED BY THE GRADING OPERATION.
5. THE LANDSCAPE ARCHITECT WILL BE THE FINAL JUDGE AS TO THE CONDITION OF ALL PLANTED AREAS AFTER SPRIGGING.
6. SPRIGS SHALL BE FREE FROM PESTS AND DISEASE, DELIVERED IN A TIMELY FASHION AND CONSIST OF STEM, LEAVES AND STOLONS. THE SPRIGS SHALL COME FROM A NURSERY APPROVED BY THE LANDSCAPE ARCHITECT. CONTRACTOR SHALL PROVIDE AND PLANT THE GRASS SPRIGS BY SHREDDING THE GRASS AT THE TIME OF HARVEST AND BY DELIVERING IT TO THE SITE WITHIN 24 HOURS AFTER HARVESTING AND HAVING IT PLANTED IN THE GROUND WITHIN 48 HOURS AFTER IT HAS BEEN HARVESTED. THE GRASS SHALL BE PLANTED BY BROADCASTING AND THE SPRIGS SHALL BE PLACED INTO THE GROUND WITH A STRAIGHT-DISC TYPE PLANTER CUSTOMARILY USED IN SPRIGGING APPLICATIONS. ALL AREAS SHALL BE ROLLED CUSTOMARILY USED IN ROLLER AFTER PLANTING. STOLONS SHOULD NOT HAVE A LENGTH LONGER THAN 1 ½ INCHES PER STOLON. U3 BERMUDAGRASS SHALL BE SPRIGGED AT A RATE OF NO LESS THAN 400 BUSHELS PER ACRE.
7. CONTRACTOR TO PROVIDE SPRIG GROW-IN. REFER TO SPECIFICATIONS FOR ADDITIONAL INFORMATION.

SOIL AMENDMENT NOTES

1. CONTRACTOR IS TO SPREAD ½" OF DARK FOREST COMPOST AND 1" OF MASONRY OR TOP-DRESSING SAND OVER ALL AREAS AS LISTED IN APPLICATION INFORMATION BELOW.
2. CONTRACTOR IS TO TILL DARK FOREST COMPOST AND SAND INTO TOP 4"-6" OF SOIL.
3. CONTRACTOR IS TO SUBMIT ALL INFORMATION ON DARK FOREST COMPOST AND SAND AS PART OF A SUBMITTAL PACKAGE. THIS IS TO INCLUDE ALL MANUFACTURERS PRODUCT INFORMATION AND SOURCE OF MATERIAL.

PRODUCT INFORMATION

SOIL AMENDMENT
DARK FOREST COMPOST OR APPROVED EQUAL

MINICK MATERIALS
6865 NORTH INTERSTATE DR.
NORMAN, OK
TIM SHANAHAN
PH: 405-834-8280
WWW.MINICKMATERIALS.COM

PRODUCT APPLICATION

DARK FOREST COMPOST
-968 CUBIC YARDS

MASONRY SAND OR TOP DRESSING SAND
-2904 TONS

APPLY TO EACH FIELD AREA AND 5' SURROUNDS
- 220' X 340' APPROXIMATE AREA

NOTE: FOR ALL TREE INFORMATION RE: LS-1

PDG
PLANNING DESIGN GROUP
LANDSCAPE ARCHITECTURE • RECREATIONAL DESIGN • LAND PLANNING
5314 S. YALE AVE., SUITE 710, TULSA, OK 74135
918.628.1255 918.628.1256 FAX
WWW.PLANNINGDESIGNGROUP.COM

JAMES C. CROSBY, ASLA
LANDSCAPE ARCHITECT OF RECORD

PROJECT INFORMATION

PROJECT ADDRESS:

1001 E. ROBINSON ST.,
NORMAN, OKLAHOMA 73071

PROJECT NO.	NA
DATE	04/29/22
DRAWN BY	CHECKED BY
AB	GE

GRIFFIN SOCCER COMPLEX
PHASE 6
NORMAN, OKLAHOMA

ISSUE/ REVISIONS

06/03/22	BID SET

OWNER:

THE CITY OF NORMAN PARKS & RECREATION
201-C WEST GRAY
NORMAN, OK 73069
(405) 366-5472

LS-2

GRASSING PLAN

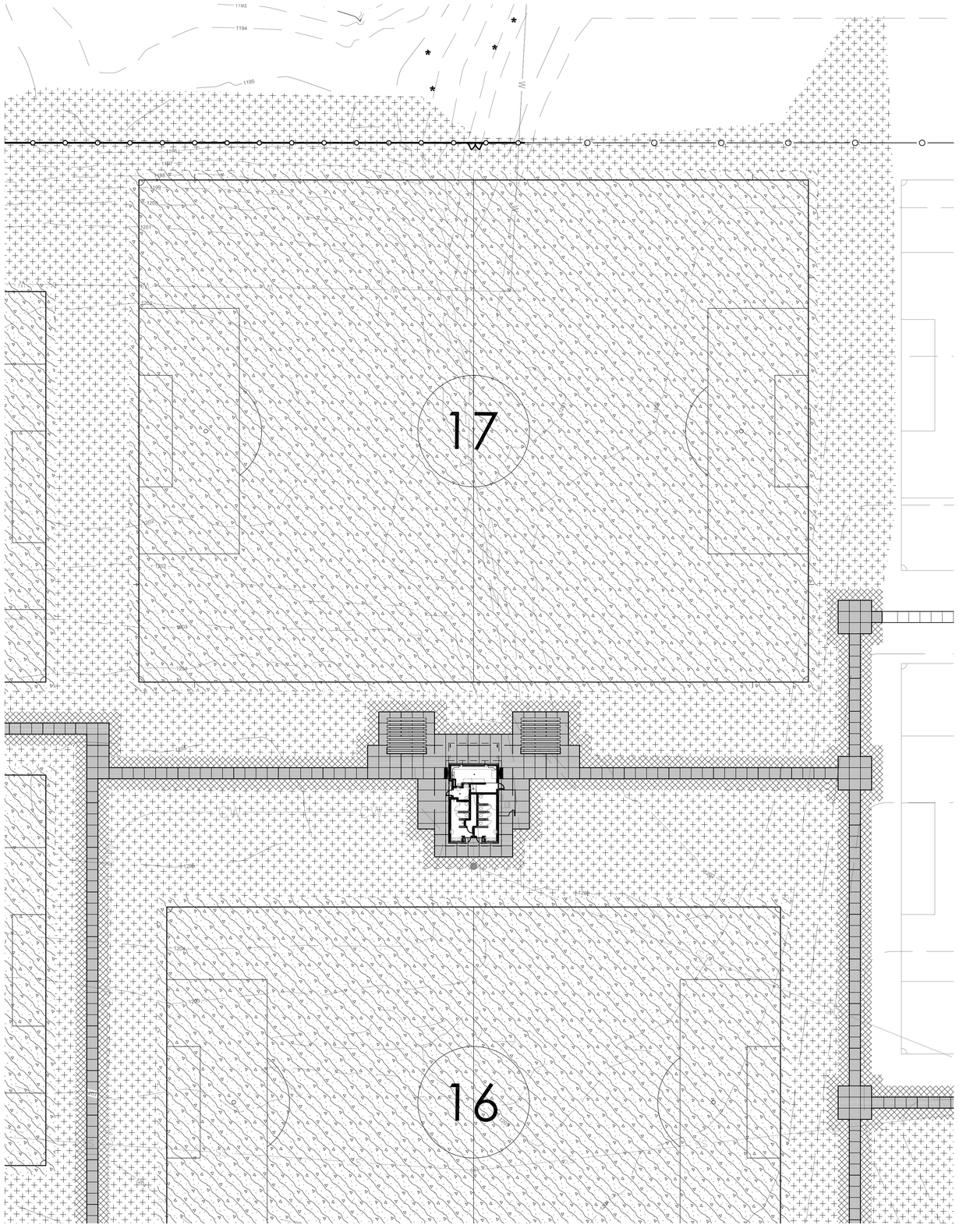

1 GRASSING - PLAN VIEW

SCALE: 1" = 30'-0"

30 0 15 30 60

NORTH

GRASSING LEGEND

SYMBOL	DESCRIPTION	QTY
	SOD U3 BERMUDA	131,434 SF
	SPRIGS U3 BERMUDA	627,200 SF
	HYDROMULCH U3 BERMUDA	515,571 SF

SODDING SUMMARY NOTES

1. REFER TO PROJECT MANUAL FOR FURTHER SPECIFICATIONS.
2. ALL NETTING TO BE REMOVED FROM SOD DURING INSTALLATION.
3. FINE GRADE LAWN AREAS TO SMOOTH, EVEN SURFACE WITH A LOOSE, UNIFORMLY FINE TEXTURE. FLOAT SMOOTH TO REMOVE RIDGES AND FILL DEPRESSIONS AS REQUIRED TO REMOVE RIDGES AND FILL DEPRESSIONS AS REQUIRED TO DRAIN.
4. APPLY APPROVED FERTILIZER ON FINISH GRADE PRIOR TO SOD INSTALLATION AT A RATE OF ONE (1) POUND OF ACTUAL NITROGEN PER 1000 SQUARE FEET.
5. ON 3:1 SLOPES OR GREATER SOD SHALL BE INSTALLED PERPENDICULAR TO SLOPE AND SECURED WITH APPROVED WOOD STAKES AS NEEDED TO PREVENT SOD FROM SLOUGHING OFF SLOPES.
6. THE SITE IS TO BE KEPT CLEAN AND ORDERLY. ALL TRASH, INCLUDING DEBRIS FROM REMOVING WEEDS OR ROCKS FROM SODDED AREAS, SHALL BE REMOVED FROM THE SITE AS WORK PROGRESSES. ALL PAVED AREAS SHALL BE KEPT CLEAN BY HOSING AND/OR SWEEPING.
7. CONTRACTOR IS RESPONSIBLE FOR SOLID SODDING ALL AREAS DISTURBED DURING CONSTRUCTION OPERATIONS.
8. LAY BERMUDA SOD TO FORM A SOLID MASS TIGHTLY-FITTED JOINTS. DO NOT OVERLAY EDGES. STAGGER STRIPS TO OFFSET JOINTS IN ADJACENT COURSES.
9. WATER SOD LIGHTLY AND THEN ROLL WITH A WATER FILLED LAWN ROLLER TO ENSURE CONTACT WITH SUBGRADE AND TO INSURE A SMOOTH SURFACE FREE OF CLUMPS AND DEPRESSIONS.
10. ALL AREAS NOT SHOWN ON PLAN THAT ARE DISTURBED DURING CONSTRUCTION ARE TO BE SOLID SODDED WITH U3 SOD. CONSULT LANDSCAPE ARCHITECT FOR APPROVAL BEFORE SODDING ANY ADDITIONAL AREAS NOT INDICATED ON THIS PLAN.

SPRIGGING SUMMARY NOTES

1. REFER TO PROJECT MANUAL FOR FURTHER SPECIFICATIONS.
2. ALL CLEAN-UP AND FINISH GRADING SHALL BE COMPLETED BY THE CONTRACTOR AND APPROVED BY LANDSCAPE ARCHITECT.
3. WHERE PRACTICAL OR NECESSARY, MECHANICAL SPRIGGING SHALL BE PERPENDICULAR TO THE SLOPES IN ORDER TO MINIMIZE EROSION IN THESE AREAS. MOUNDS, SOIL AROUND TREE TRUNKS, SLOPES, OR ANY OTHER AREAS THAT DO NOT LEND THEMSELVES TO MECHANICAL SPRIGGING SHALL BE HAND PLANTED. STOLONS SHALL BE BROADCAST EVENLY OVER THESE AREAS AND CHOPPED IN LIGHTLY BY SHOVEL, HOE OR OTHER HAND TOOL WHICH LEAVES THE GRADE UNCHANGED.
4. CARE SHALL BE TAKEN NOT TO DISTURB THE NATURAL GRASSES IN THE AREAS ADJACENT TO THE WORK ZONE WHICH HAD NOT BEEN DISTURBED BY THE GRADING OPERATION.
5. THE LANDSCAPE ARCHITECT WILL BE THE FINAL JUDGE AS TO THE CONDITION OF ALL PLANTED AREAS AFTER SPRIGGING.
6. SPRIGS SHALL BE FREE FROM PESTS AND DISEASE, DELIVERED IN A TIMELY FASHION AND CONSIST OF STEM, LEAVES AND STOLONS. THE SPRIGS SHALL COME FROM A NURSERY APPROVED BY THE LANDSCAPE ARCHITECT. CONTRACTOR SHALL PROVIDE AND PLANT THE GRASS SPRIGS BY SHREDDING THE GRASS AT THE TIME OF HARVEST AND BY DELIVERING IT TO THE SITE WITHIN 24 HOURS AFTER HARVESTING AND HAVING IT PLANTED IN THE GROUND WITHIN 48 HOURS AFTER IT HAS BEEN HARVESTED. THE GRASS SHALL BE PLANTED BY BROADCASTING AND THE SPRIGS SHALL BE PLACED INTO THE GROUND WITH A STRAIGHT-DISC TYPE PLANTER CUSTOMARILY USED IN SPRIGGING APPLICATIONS. ALL AREAS SHALL BE ROLLED CUSTOMARILY USED IN ROLLER AFTER PLANTING. STOLONS SHOULD NOT HAVE A LENGTH LONGER THAN 1 ½ INCHES PER STOLON. U3 BERMUDAGRASS SHALL BE SPRIGGED AT A RATE OF NO LESS THAN 400 BUSHELS PER ACRE.
7. CONTRACTOR TO PROVIDE SPRIG GROW-IN. REFER TO SPECIFICATIONS FOR ADDITIONAL INFORMATION.

SOIL AMENDMENT NOTES

1. CONTRACTOR IS TO SPREAD ½" OF DARK FOREST COMPOST AND 1" OF MASONRY OR TOP-DRESSING SAND OVER ALL AREAS AS LISTED IN APPLICATION INFORMATION BELOW.
2. CONTRACTOR IS TO TILL DARK FOREST COMPOST AND SAND INTO TOP 4"-6" OF SOIL.
3. CONTRACTOR IS TO SUBMIT ALL INFORMATION ON DARK FOREST COMPOST AND SAND AS PART OF A SUBMITTAL PACKAGE. THIS IS TO INCLUDE ALL MANUFACTURERS PRODUCT INFORMATION AND SOURCE OF MATERIAL.

PRODUCT INFORMATION

SOIL AMENDMENT
DARK FOREST COMPOST OR APPROVED EQUAL

MINICK MATERIALS
6665 NORTH INTERSTATE DR.
NORMAN, OK
TIM SHANAHAN
PH: 405-854-8280
WWW.MINICKMATERIALS.COM

PRODUCT APPLICATION

DARK FOREST COMPOST
-968 CUBIC YARDS

MASONRY SAND OR TOP DRESSING SAND
-2,904 TONS

APPLY TO EACH FIELD AREA AND 5' SURROUNDS
- 220' X 340' APPROXIMATE AREA

NOTE: FOR ALL TREE INFORMATION RE: LS-1

PDG
PLANNING DESIGN GROUP
LANDSCAPE ARCHITECTURE • RECREATIONAL DESIGN • LAND PLANNING
5314 S. YALE AVE., SUITE 710, TULSA, OK 74135
918.628.1255 918.628.1256 FAX
WWW.PLANNINGDESIGNGROUP.COM

REGISTERED LANDSCAPE ARCHITECT
JAMES C. CROSBY
121
OKLAHOMA
5-22

JAMES C. CROSBY, ASLA
LANDSCAPE ARCHITECT OF RECORD

PROJECT INFORMATION

PROJECT ADDRESS:

1001 E. ROBINSON ST.,
NORMAN, OKLAHOMA 73071

PROJECT NO.	NA
DATE	04/29/22
DRAWN BY	CHECKED BY
AB	GE

GRIFFIN SOCCER COMPLEX
PHASE 6
NORMAN, OKLAHOMA

ISSUE/ REVISIONS	
06/03/22	BID SET

OWNER:

THE CITY OF NORMAN
PARKS & RECREATION
201-C WEST GRAY
NORMAN, OK 73069
(405) 366-5472

LS-3

GRASSING PLAN

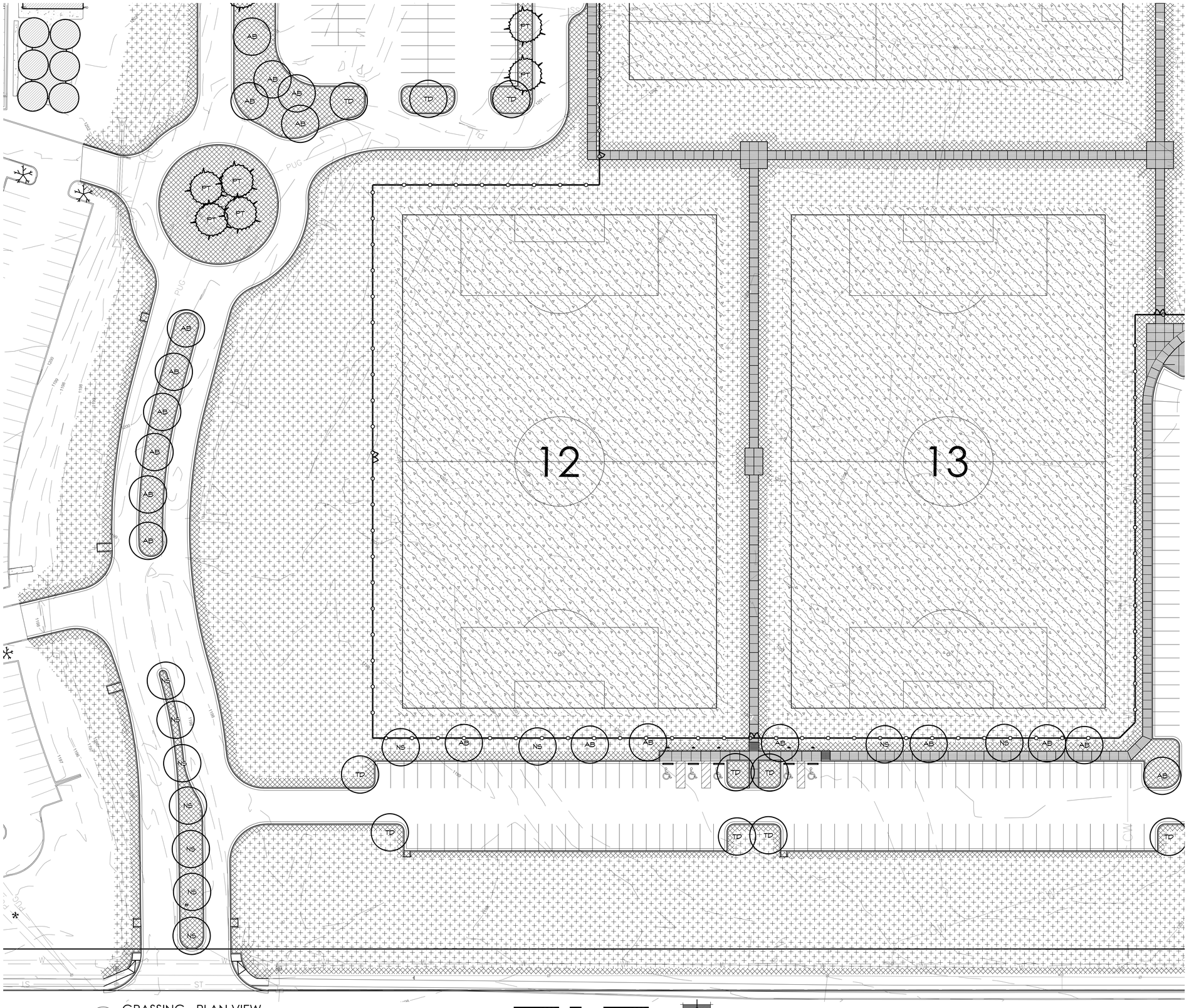

1 GRASSING - PLAN VIEW

SCALE: 1" = 30'-0"

GRASSING LEGEND

SYMBOL	DESCRIPTION	QTY
	SOD U3 BERMUDA	131,434 SF
	SPRIGS U3 BERMUDA	627,200 SF
	HYDROMULCH U3 BERMUDA	515,571 SF

SODDING SUMMARY NOTES

1. REFER TO PROJECT MANUAL FOR FURTHER SPECIFICATIONS.
2. ALL NETTING TO BE REMOVED FROM SOD DURING INSTALLATION.
3. FINE GRADE LAWN AREAS TO SMOOTH, EVEN SURFACE WITH A LOOSE, UNIFORMLY FINE TEXTURE. FLOAT SMOOTH TO REMOVE RIDGES AND FILL DEPRESSIONS AS REQUIRED TO REMOVE RIDGES AND FILL DEPRESSIONS AS REQUIRED TO DRAIN.
4. APPLY APPROVED FERTILIZER ON FINISH GRADE PRIOR TO SOD INSTALLATION AT A RATE OF ONE (1) POUND OF ACTUAL NITROGEN PER 1000 SQUARE FEET.
5. ON 3:1 SLOPES OR GREATER SOD SHALL BE INSTALLED PERPENDICULAR TO SLOPE AND SECURED WITH APPROVED WOOD STAKES AS NEEDED TO PREVENT SOD FROM SLOUGHING OFF SLOPES.
6. THE SITE IS TO BE KEPT CLEAN AND ORDERLY. ALL TRASH, INCLUDING DEBRIS FROM REMOVING WEEDS OR ROCKS FROM SODDED AREAS, SHALL BE REMOVED FROM THE SITE AS WORK PROGRESSES. ALL PAVED AREAS SHALL BE KEPT CLEAN BY HOSING AND/OR SWEEPING.
7. CONTRACTOR IS RESPONSIBLE FOR SOLID SODDING ALL AREAS DISTURBED DURING CONSTRUCTION OPERATIONS.
8. LAY BERMUDA SOD TO FORM A SOLID MASS TIGHTLY-FITTED JOINTS. DO NOT OVERLAY EDGES. STAGGER STRIPS TO OFFSET JOINTS IN ADJACENT COURSES.
9. WATER SOD LIGHTLY AND THEN ROLL WITH A WATER FILLED LAWN ROLLER TO ENSURE CONTACT WITH SUBGRADE AND TO INSURE A SMOOTH SURFACE FREE OF CLUMPS AND DEPRESSIONS.
10. ALL AREAS NOT SHOWN ON PLAN THAT ARE DISTURBED DURING CONSTRUCTION ARE TO BE SOLID SODDED WITH U3 SOD. CONSULT LANDSCAPE ARCHITECT FOR APPROVAL BEFORE SODDING ANY ADDITIONAL AREAS NOT INDICATED ON THIS PLAN.

SPRIGGING SUMMARY NOTES

1. REFER TO PROJECT MANUAL FOR FURTHER SPECIFICATIONS.
2. ALL CLEAN-UP AND FINISH GRADING SHALL BE COMPLETED BY THE CONTRACTOR AND APPROVED BY LANDSCAPE ARCHITECT.
3. WHERE PRACTICAL OR NECESSARY, MECHANICAL SPRIGGING SHALL BE PERPENDICULAR TO THE SLOPES IN ORDER TO MINIMIZE EROSION IN THESE AREAS. MOUNDS, SOIL AROUND TREE TRUNKS, SLOPES, OR ANY OTHER AREAS THAT DO NOT LEND THEMSELVES TO MECHANICAL SPRIGGING SHALL BE HAND PLANTED. STOLONS SHALL BE BROADCAST EVENLY OVER THESE AREAS AND CHOPPED IN LIGHTLY BY SHOVEL, HOE OR OTHER HAND TOOL WHICH LEAVES THE GRADE UNCHANGED.
4. CARE SHALL BE TAKEN NOT TO DISTURB THE NATURAL GRASSES IN THE AREAS ADJACENT TO THE WORK ZONE WHICH HAD NOT BEEN DISTURBED BY THE GRADING OPERATION.
5. THE LANDSCAPE ARCHITECT WILL BE THE FINAL JUDGE AS TO THE CONDITION OF ALL PLANTED AREAS AFTER SPRIGGING.
6. SPRIGS SHALL BE FREE FROM PESTS AND DISEASE, DELIVERED IN A TIMELY FASHION AND CONSIST OF STEM, LEAVES AND STOLONS. THE SPRIGS SHALL COME FROM A NURSERY APPROVED BY THE LANDSCAPE ARCHITECT. CONTRACTOR SHALL PROVIDE AND PLANT THE GRASS SPRIGS BY SHREDDING THE GRASS AT THE TIME OF HARVEST AND BY DELIVERING IT TO THE SITE WITHIN 24 HOURS AFTER HARVESTING AND HAVING IT PLANTED IN THE GROUND WITHIN 48 HOURS AFTER IT HAS BEEN HARVESTED. THE GRASS SHALL BE PLANTED BY BROADCASTING AND THE SPRIGS SHALL BE PLACED INTO THE GROUND WITH A STRAIGHT-DISC TYPE PLANTER CUSTOMARILY USED IN SPRIGGING APPLICATIONS. ALL AREAS SHALL BE ROLLED CUSTOMARILY USED IN ROLLER AFTER PLANTING. STOLONS SHOULD NOT HAVE A LENGTH LONGER THAN 1 ½ INCHES PER STOLON. U3 BERMUDAGRASS SHALL BE SPRIGGED AT A RATE OF NO LESS THAN 400 BUSHELS PER ACRE.
7. CONTRACTOR TO PROVIDE SPRIG GROW-IN. REFER TO SPECIFICATIONS FOR ADDITIONAL INFORMATION.

SOIL AMENDMENT NOTES

1. CONTRACTOR IS TO SPREAD ½" OF DARK FOREST COMPOST AND 1" OF MASONRY OR TOP-DRESSING SAND OVER ALL AREAS AS LISTED IN APPLICATION INFORMATION BELOW.
2. CONTRACTOR IS TO TILL DARK FOREST COMPOST AND SAND INTO TOP 4"-6" OF SOIL.
3. CONTRACTOR IS TO SUBMIT ALL INFORMATION ON DARK FOREST COMPOST AND SAND AS PART OF A SUBMITTAL PACKAGE. THIS IS TO INCLUDE ALL MANUFACTURERS PRODUCT INFORMATION AND SOURCE OF MATERIAL.

PRODUCT INFORMATION

SOIL AMENDMENT
DARK FOREST COMPOST OR APPROVED EQUAL

MINICK MATERIALS
8665 NORTH INTERSTATE DR.
NORMAN, OK.
TIM SHANAHAN
PH. 405-854-8280
WWW.MINICKMATERIALS.COM

PRODUCT APPLICATION

DARK FOREST COMPOST
~168 CUBIC YARDS

MASONRY SAND OR TOP DRESSING SAND
~2,904 TONS

APPLY TO EACH FIELD AREA AND 5' SURROUNDS
~ 220' X 340' APPROXIMATE AREA

NOTE: FOR ALL TREE INFORMATION RE: LS-1

PDG
PLANNING DESIGN GROUP
LANDSCAPE ARCHITECTURE • RECREATIONAL DESIGN • LAND PLANNING
5314 S. YALE AVE., SUITE 710, TULSA, OK 74135
918.628.1255 918.628.1256 FAX
WWW.PLANNINGDESIGNGROUP.COM

REGISTERED LANDSCAPE ARCHITECT
JAMES C. CROSBY
1 2 1
OKLAHOMA
5-22

JAMES C. CROSBY, ASLA
LANDSCAPE ARCHITECT OF RECORD

PROJECT INFORMATION

PROJECT ADDRESS:

1001 E. ROBINSON ST.,
NORMAN, OKLAHOMA 73071

PROJECT NO.	NA
DATE	04/29/22
DRAWN BY	CHECKED BY
AB	GE

GRIFFIN SOCCER COMPLEX
PHASE 6
NORMAN, OKLAHOMA

ISSUE/ REVISIONS

06/03/22	BID SET

OWNER:

THE CITY OF NORMAN
PARKS & RECREATION
201-C WEST GRAY
NORMAN, OK 73069
(405) 366-5472

LS-4

GRASSING PLAN

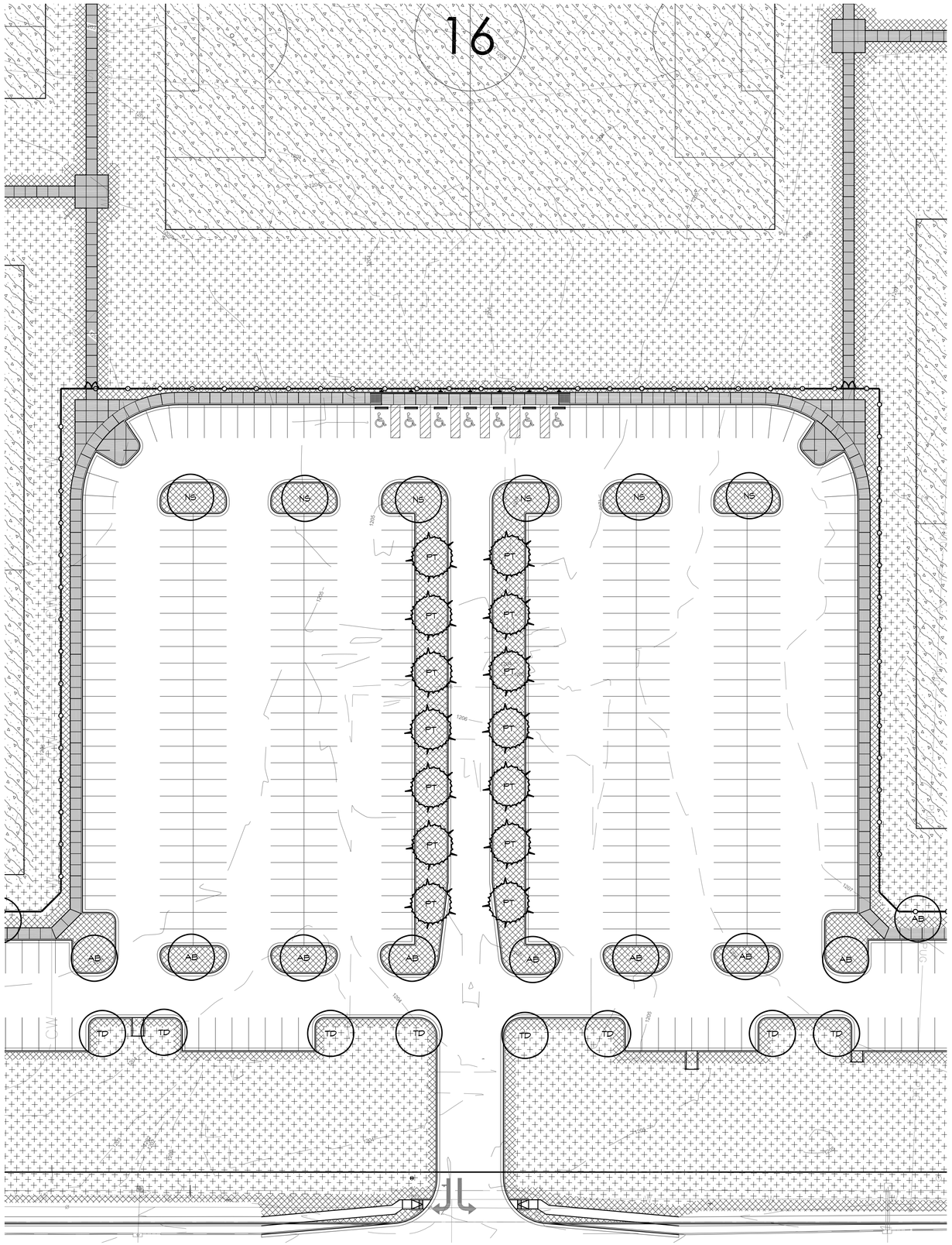

1 GRASSING - PLAN VIEW

SCALE: 1" = 30'-0"

GRASSING LEGEND

SYMBOL	DESCRIPTION	QTY
	SOD U3 BERMUDA	131,434 SF
	SPRIGS U3 BERMUDA	627,200 SF
	HYDROMULCH U3 BERMUDA	515,571 SF

SODDING SUMMARY NOTES

1. REFER TO PROJECT MANUAL FOR FURTHER SPECIFICATIONS.
2. ALL NETTING TO BE REMOVED FROM SOD DURING INSTALLATION.
3. FINE GRADE LAWN AREAS TO SMOOTH, EVEN SURFACE WITH A LOOSE, UNIFORMLY FINE TEXTURE. FLOAT SMOOTH TO REMOVE RIDGES AND FILL DEPRESSIONS AS REQUIRED TO REMOVE RIDGES AND FILL DEPRESSIONS AS REQUIRED TO DRAIN.
4. APPLY APPROVED FERTILIZER ON FINISH GRADE PRIOR TO SOD INSTALLATION AT A RATE OF ONE (1) POUND OF ACTUAL NITROGEN PER 1000 SQUARE FEET.
5. ON 3:1 SLOPES OR GREATER SOD SHALL BE INSTALLED PERPENDICULAR TO SLOPE AND SECURED WITH APPROVED WOOD STAKES AS NEEDED TO PREVENT SOD FROM SLOUGHING OFF SLOPES.
6. THE SITE IS TO BE KEPT CLEAN AND ORDERLY. ALL TRASH, INCLUDING DEBRIS FROM REMOVING WEEDS OR ROCKS FROM SODDED AREAS, SHALL BE REMOVED FROM THE SITE AS WORK PROGRESSES. ALL PAVED AREAS SHALL BE KEPT CLEAN BY HOSING AND/OR SWEEPING.
7. CONTRACTOR IS RESPONSIBLE FOR SOLID SODDING ALL AREAS DISTURBED DURING CONSTRUCTION OPERATIONS.
8. LAY BERMUDA SOD TO FORM A SOLID MASS TIGHTLY-FITTED JOINTS. DO NOT OVERLAY EDGES. STAGGER STRIPS TO OFFSET JOINTS IN ADJACENT COURSES.
9. WATER SOD LIGHTLY AND THEN ROLL WITH A WATER FILLED LAWN ROLLER TO ENSURE CONTACT WITH SUBGRADE AND TO INSURE A SMOOTH SURFACE FREE OF CLUMPS AND DEPRESSIONS.
10. ALL AREAS NOT SHOWN ON PLAN THAT ARE DISTURBED DURING CONSTRUCTION ARE TO BE SOLID SODDED WITH U3 SOD. CONSULT LANDSCAPE ARCHITECT FOR APPROVAL BEFORE SODDING ANY ADDITIONAL AREAS NOT INDICATED ON THIS PLAN.

SPRIGGING SUMMARY NOTES

1. REFER TO PROJECT MANUAL FOR FURTHER SPECIFICATIONS.
2. ALL CLEAN-UP AND FINISH GRADING SHALL BE COMPLETED BY THE CONTRACTOR AND APPROVED BY LANDSCAPE ARCHITECT.
3. WHERE PRACTICAL OR NECESSARY, MECHANICAL SPRIGGING SHALL BE PERPENDICULAR TO THE SLOPES IN ORDER TO MINIMIZE EROSION IN THESE AREAS. MOUNDS, SOIL AROUND TREE TRUNKS, SLOPES, OR ANY OTHER AREAS THAT DO NOT LEND THEMSELVES TO MECHANICAL SPRIGGING SHALL BE HAND PLANTED. STOLONS SHALL BE BROADCAST EVENLY OVER THESE AREAS AND CHOPPED IN LIGHTLY BY SHOVEL, HOE OR OTHER HAND TOOL WHICH LEAVES THE GRADE UNCHANGED.
4. CARE SHALL BE TAKEN NOT TO DISTURB THE NATURAL GRASSES IN THE AREAS ADJACENT TO THE WORK ZONE WHICH HAD NOT BEEN DISTURBED BY THE GRADING OPERATION.
5. THE LANDSCAPE ARCHITECT WILL BE THE FINAL JUDGE AS TO THE CONDITION OF ALL PLANTED AREAS AFTER SPRIGGING.
6. SPRIGS SHALL BE FREE FROM PESTS AND DISEASE, DELIVERED IN A TIMELY FASHION AND CONSIST OF STEM, LEAVES AND STOLONS. THE SPRIGS SHALL COME FROM A NURSERY APPROVED BY THE LANDSCAPE ARCHITECT. CONTRACTOR SHALL PROVIDE AND PLANT THE GRASS SPRIGS BY SHREDDING THE GRASS AT THE TIME OF HARVEST AND BY DELIVERING IT TO THE SITE WITHIN 24 HOURS AFTER HARVESTING AND HAVING IT PLANTED IN THE GROUND WITHIN 48 HOURS AFTER IT HAS BEEN HARVESTED. THE GRASS SHALL BE PLANTED BY BROADCASTING AND THE SPRIGS SHALL BE PLACED INTO THE GROUND WITH A STRAIGHT-DISC TYPE PLANTER CUSTOMARILY USED IN SPRIGGING APPLICATIONS. ALL AREAS SHALL BE ROLLED CUSTOMARILY USED IN ROLLER AFTER PLANTING. STOLONS SHOULD NOT HAVE A LENGTH LONGER THAN 1 ½ INCHES PER STOLON. U3 BERMUDAGRASS SHALL BE SPRIGGED AT A RATE OF NO LESS THAN 400 BUSHELS PER ACRE.
7. CONTRACTOR TO PROVIDE SPRIG GROW-IN. REFER TO SPECIFICATIONS FOR ADDITIONAL INFORMATION.

SOIL AMENDMENT NOTES

1. CONTRACTOR IS TO SPREAD ½" OF DARK FOREST COMPOST AND 1" OF MASONRY OR TOP-DRESSING SAND OVER ALL AREAS AS LISTED IN APPLICATION INFORMATION BELOW.
2. CONTRACTOR IS TO TILL DARK FOREST COMPOST AND SAND INTO TOP 4"-6" OF SOIL.
3. CONTRACTOR IS TO SUBMIT ALL INFORMATION ON DARK FOREST COMPOST AND SAND AS PART OF A SUBMITTAL PACKAGE. THIS IS TO INCLUDE ALL MANUFACTURERS PRODUCT INFORMATION AND SOURCE OF MATERIAL.

PRODUCT INFORMATION

SOIL AMENDMENT
DARK FOREST COMPOST OR APPROVED EQUAL

MINICK MATERIALS
6665 NORTH INTERSTATE DR.
NORMAN, OK
TIM SHANAHAN
PH: 405-834-8280
WWW.MINICKMATERIALS.COM

PRODUCT APPLICATION

DARK FOREST COMPOST
-968 CUBIC YARDS

MASONRY SAND OR TOP DRESSING SAND
-2,904 TONS

APPLY TO EACH FIELD AREA AND 5' SURROUNDS
- 220' X 340' APPROXIMATE AREA

NOTE: FOR ALL TREE INFORMATION RE: LS-1

PDG
PLANNING DESIGN GROUP
LANDSCAPE ARCHITECTURE • RECREATIONAL DESIGN • LAND PLANNING
5314 S. YALE AVE., SUITE 710, TULSA, OK 74135
918.628.1255 918.628.1256 FAX
WWW.PLANNINGDESIGNGROUP.COM

REGISTERED LANDSCAPE ARCHITECT
JAMES C. CROSBY
121
OKLAHOMA
5-22

JAMES C. CROSBY, ASLA
LANDSCAPE ARCHITECT OF RECORD

PROJECT INFORMATION

PROJECT ADDRESS:

1001 E. ROBINSON ST.,
NORMAN, OKLAHOMA 73071

PROJECT NO.	NA
DATE	04/29/22
DRAWN BY	CHECKED BY
AB	GE

GRIFFIN SOCCER COMPLEX
PHASE 6
NORMAN, OKLAHOMA

ISSUE/ REVISIONS	
06/03/22	BID SET

OWNER:

THE CITY OF NORMAN
PARKS & RECREATION
201-C WEST GRAY
NORMAN, OK 73069
(405) 366-5472

LS-5

GRASSING PLAN

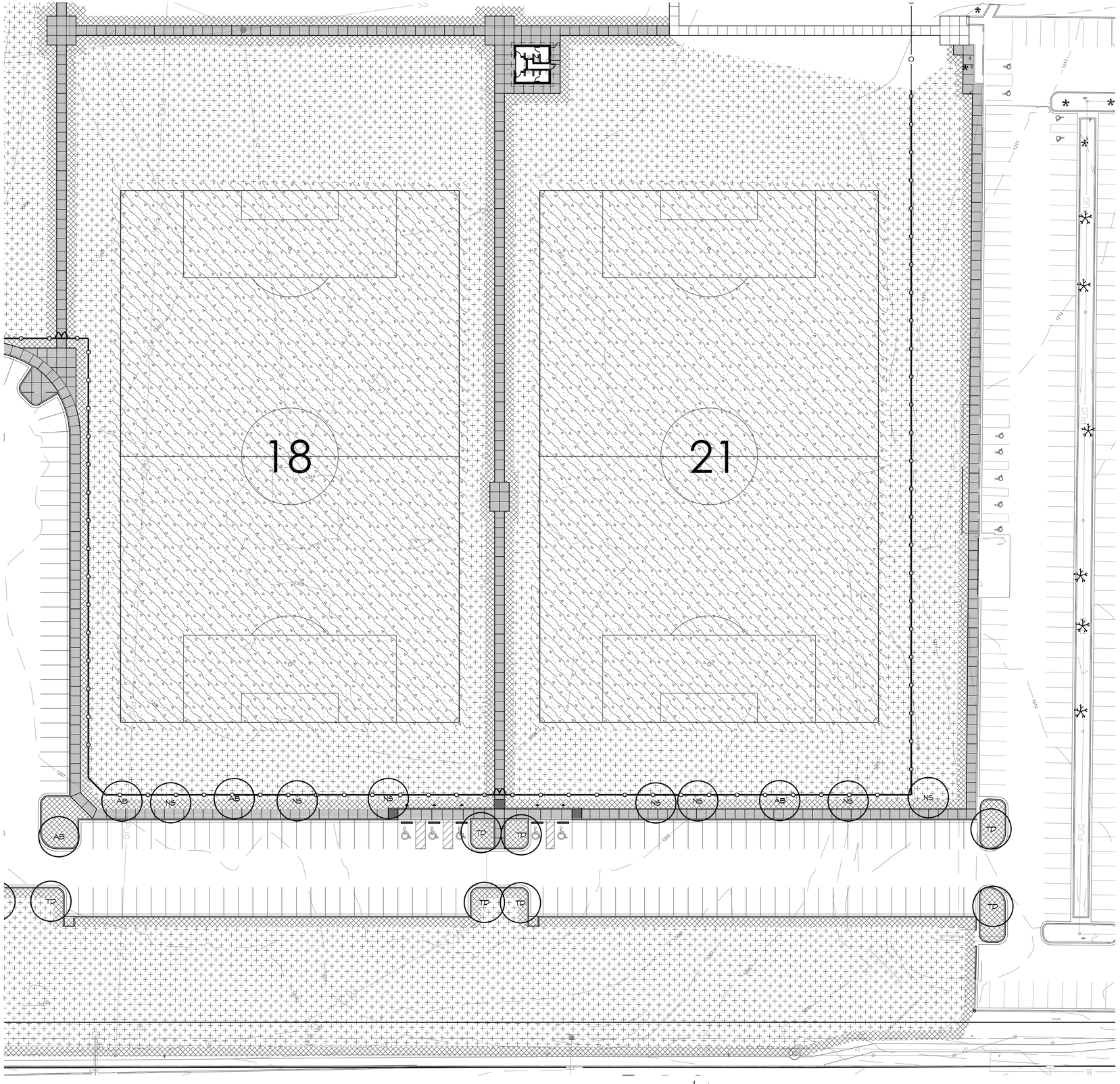

1 GRASSING - PLAN VIEW
SCALE: 1" = 30'-0"

GRASSING LEGEND

SYMBOL	DESCRIPTION	QTY
	SOD U3 BERMUDA	131,434 SF
	SPRIGS U3 BERMUDA	627,200 SF
	HYDROMULCH U3 BERMUDA	515,571 SF

SODDING SUMMARY NOTES

1. REFER TO PROJECT MANUAL FOR FURTHER SPECIFICATIONS.
2. ALL NETTING TO BE REMOVED FROM SOD DURING INSTALLATION.
3. FINE GRADE LAWN AREAS TO SMOOTH, EVEN SURFACE WITH A LOOSE, UNIFORMLY FINE TEXTURE. FLOAT SMOOTH TO REMOVE RIDGES AND FILL DEPRESSIONS AS REQUIRED TO REMOVE RIDGES AND FILL DEPRESSIONS AS REQUIRED TO DRAIN.
4. APPLY APPROVED FERTILIZER ON FINISH GRADE PRIOR TO SOD INSTALLATION AT A RATE OF ONE (1) POUND OF ACTUAL NITROGEN PER 1000 SQUARE FEET.
5. ON 3:1 SLOPES OR GREATER SOD SHALL BE INSTALLED PERPENDICULAR TO SLOPE AND SECURED WITH APPROVED WOOD STAKES AS NEEDED TO PREVENT SOD FROM SLOUGHING OFF SLOPES.
6. THE SITE IS TO BE KEPT CLEAN AND ORDERLY. ALL TRASH, INCLUDING DEBRIS FROM REMOVING WEEDS OR ROCKS FROM SODDED AREAS, SHALL BE REMOVED FROM THE SITE AS WORK PROGRESSES. ALL PAVED AREAS SHALL BE KEPT CLEAN BY HOSING AND/OR SWEEPING.
7. CONTRACTOR IS RESPONSIBLE FOR SOLID SODDING ALL AREAS DISTURBED DURING CONSTRUCTION OPERATIONS.
8. LAY BERMUDA SOD TO FORM A SOLID MASS TIGHTLY-FITTED JOINTS. DO NOT OVERLAY EDGES. STAGGER STRIPS TO OFFSET JOINTS IN ADJACENT COURSES.
9. WATER SOD LIGHTLY AND THEN ROLL WITH A WATER FILLED LAWN ROLLER TO ENSURE CONTACT WITH SUBGRADE AND TO INSURE A SMOOTH SURFACE FREE OF CLUMPS AND DEPRESSIONS.
10. ALL AREAS NOT SHOWN ON PLAN THAT ARE DISTURBED DURING CONSTRUCTION ARE TO BE SOLID SODDED WITH U3 SOD. CONSULT LANDSCAPE ARCHITECT FOR APPROVAL BEFORE SODDING ANY ADDITIONAL AREAS NOT INDICATED ON THIS PLAN.

SPRIGGING SUMMARY NOTES

1. REFER TO PROJECT MANUAL FOR FURTHER SPECIFICATIONS.
2. ALL CLEAN-UP AND FINISH GRADING SHALL BE COMPLETED BY THE CONTRACTOR AND APPROVED BY LANDSCAPE ARCHITECT.
3. WHERE PRACTICAL OR NECESSARY, MECHANICAL SPRIGGING SHALL BE PERPENDICULAR TO THE SLOPES IN ORDER TO MINIMIZE EROSION IN THESE AREAS. MOUNDS, SOIL AROUND TREE TRUNKS, SLOPES, OR ANY OTHER AREAS THAT DO NOT LEND THEMSELVES TO MECHANICAL SPRIGGING SHALL BE HAND PLANTED. STOLONS SHALL BE BROADCAST EVENLY OVER THESE AREAS AND CHOPPED IN LIGHTLY BY SHOVEL, HOE OR OTHER HAND TOOL WHICH LEAVES THE GRADE UNCHANGED.
4. CARE SHALL BE TAKEN NOT TO DISTURB THE NATURAL GRASSES IN THE AREAS ADJACENT TO THE WORK ZONE WHICH HAD NOT BEEN DISTURBED BY THE GRADING OPERATION.
5. THE LANDSCAPE ARCHITECT WILL BE THE FINAL JUDGE AS TO THE CONDITION OF ALL PLANTED AREAS AFTER SPRIGGING.
6. SPRIGS SHALL BE FREE FROM PESTS AND DISEASE, DELIVERED IN A TIMELY FASHION AND CONSIST OF STEM, LEAVES AND STOLONS. THE SPRIGS SHALL COME FROM A NURSERY APPROVED BY THE LANDSCAPE ARCHITECT. CONTRACTOR SHALL PROVIDE AND PLANT THE GRASS SPRIGS BY SHREDDING THE GRASS AT THE TIME OF HARVEST AND BY DELIVERING IT TO THE SITE WITHIN 24 HOURS AFTER HARVESTING AND HAVING IT PLANTED IN THE GROUND WITHIN 48 HOURS AFTER IT HAS BEEN HARVESTED. THE GRASS SHALL BE PLANTED BY BROADCASTING AND THE SPRIGS SHALL BE PLACED INTO THE GROUND WITH A STRAIGHT-DISC TYPE PLANTER CUSTOMARILY USED IN SPRIGGING APPLICATIONS. ALL AREAS SHALL BE ROLLED CUSTOMARILY USED IN ROLLER AFTER PLANTING. STOLONS SHOULD NOT HAVE A LENGTH LONGER THAN 1 ½ INCHES PER STOLON. U3 BERMUDAGRASS SHALL BE SPRIGGED AT A RATE OF NO LESS THAN 400 BUSHELS PER ACRE.
7. CONTRACTOR TO PROVIDE SPRIG GROW-IN, REFER TO SPECIFICATIONS FOR ADDITIONAL INFORMATION.

SOIL AMENDMENT NOTES

1. CONTRACTOR IS TO SPREAD ½" OF DARK FOREST COMPOST AND 1" OF MASONRY OR TOP-DRESSING SAND OVER ALL AREAS AS LISTED IN APPLICATION INFORMATION BELOW.
2. CONTRACTOR IS TO TILL DARK FOREST COMPOST AND SAND INTO TOP 4"-6" OF SOIL.
3. CONTRACTOR IS TO SUBMIT ALL INFORMATION ON DARK FOREST COMPOST AND SAND AS PART OF A SUBMITTAL PACKAGE. THIS IS TO INCLUDE ALL MANUFACTURERS PRODUCT INFORMATION AND SOURCE OF MATERIAL.

PRODUCT INFORMATION

SOIL AMENDMENT
DARK FOREST COMPOST OR APPROVED EQUAL

MINICK MATERIALS
6665 NORTH INTERSTATE DR.
NORMAN, OK
TIM SHANAHAN
PH: 405-834-8280
WWW.MINICKMATERIALS.COM

PRODUCT APPLICATION

DARK FOREST COMPOST
-968 CUBIC YARDS

MASONRY SAND OR TOP DRESSING SAND
-2904 TONS

APPLY TO EACH FIELD AREA AND 5' SURROUNDS
- 220' X 340' APPROXIMATE AREA

NOTE: FOR ALL TREE INFORMATION RE: LS-1

PDG
PLANNING DESIGN GROUP
LANDSCAPE ARCHITECTURE • RECREATIONAL DESIGN • LAND PLANNING
5314 S. YALE AVE., SUITE 710, TULSA, OK 74135
918.628.1255 918.628.1256 FAX
WWW.PLANNINGDESIGNGROUP.COM

REGISTERED LANDSCAPE ARCHITECT
JAMES C. CROSBY
1 2 1
OKLAHOMA
4-29-22
JAMES C. CROSBY, ASLA
LANDSCAPE ARCHITECT OF RECORD

PROJECT INFORMATION

PROJECT ADDRESS:
1001 E. ROBINSON ST.,
NORMAN, OKLAHOMA 73071

PROJECT NO.	NA
DATE	04/29/22
DRAWN BY	CHECKED BY
AB	GE

GRIFFIN SOCCER COMPLEX
PHASE 6
NORMAN, OKLAHOMA

ISSUE/ REVISIONS

06/03/22	BID SET

OWNER:
THE CITY OF NORMAN
PARKS & RECREATION
201-C WEST GRAY
NORMAN, OK 73069
(405) 366-5472

LS-6

GRASSING PLAN

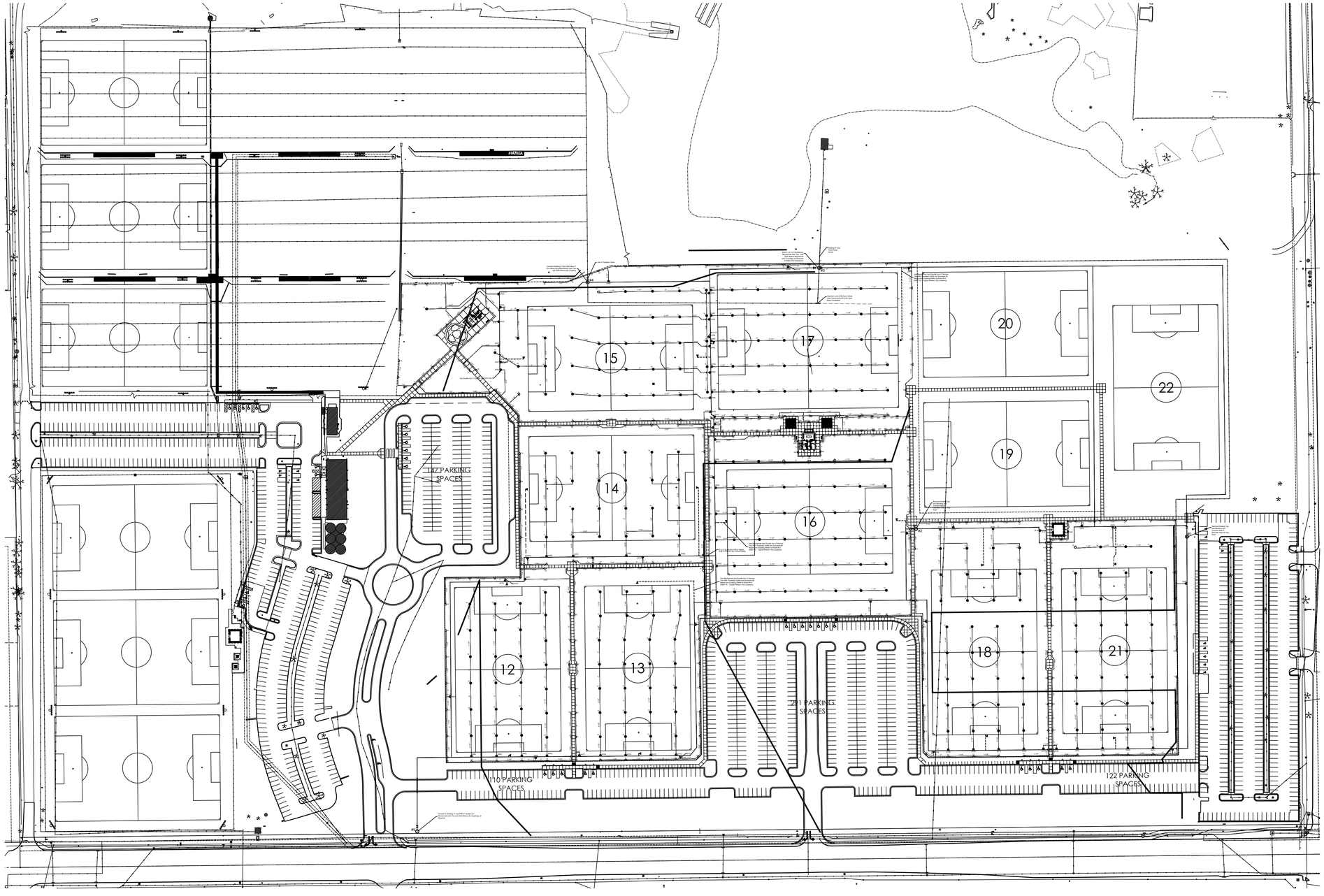

1 PHASE 6 FIELDS OVERALL LAYOUT PLAN - PLAN VIEW

SCALE: 1" = 100'-0"

VALVE CHART

CONTROL VALVE LIST

VALVE ID	SIZE	MODEL	ZONE FLOW(GPM)	
A01	2"	RAINBIRD 200-PESB	86	FIELD 21
A02	2"	RAINBIRD 200-PESB	86	
A03	2"	RAINBIRD 200-PESB	86	
A04	2"	RAINBIRD 200-PESB	86	
A05	2"	RAINBIRD 200-PESB	47	
A06	2"	RAINBIRD 200-PESB	80	
A07	2"	RAINBIRD 200-PESB	80	
A08	2"	RAINBIRD 200-PESB	68	
A09	2"	RAINBIRD 200-PESB	82	
A10	2"	RAINBIRD 200-PESB	62	FIELD 18
A11	2"	RAINBIRD 200-PESB	62	
A12	2"	RAINBIRD 200-PESB	62	
A13	2"	RAINBIRD 200-PESB	62	
A14	2"	RAINBIRD 200-PESB	85	
A15	2"	RAINBIRD 200-PESB	85	
A16	2"	RAINBIRD 200-PESB	63	
A17	2"	RAINBIRD 200-PESB	68	
A18	2"	RAINBIRD 200-PESB	68	
A19	2"	RAINBIRD 200-PESB	65	
A20	2"	RAINBIRD 200-PESB	79	
A21	2"	RAINBIRD 200-PESB	86	FIELD 16
A22	2"	RAINBIRD 200-PESB	86	
A23	2"	RAINBIRD 200-PESB	86	
A24	2"	RAINBIRD 200-PESB	86	
A25	2"	RAINBIRD 200-PESB	86	
A26	1"	RAINBIRD 100-PESB	86	
A27	2"	RAINBIRD 200-PESB	68	
A28	2"	RAINBIRD 200-PESB	68	
A29	2"	RAINBIRD 200-PESB	68	
A30	2"	RAINBIRD 200-PESB	68	
A31	2"	RAINBIRD 200-PESB	67	
A32	2"	RAINBIRD 200-PESB	86	FIELD 17
A33	2"	RAINBIRD 200-PESB	86	
A34	2"	RAINBIRD 200-PESB	86	
A35	2"	RAINBIRD 200-PESB	86	
A36	2"	RAINBIRD 200-PESB	86	
A37	2"	RAINBIRD 200-PESB	75	
A38	2"	RAINBIRD 200-PESB	62	
A39	2"	RAINBIRD 200-PESB	86	
A40	2"	RAINBIRD 200-PESB	84	
A41	2"	RAINBIRD 200-PESB	86	
A42	2"	RAINBIRD 200-PESB	57	FIELD 15
A43	2"	RAINBIRD 200-PESB	72	
A44	2"	RAINBIRD 200-PESB	72	
A45	2"	RAINBIRD 200-PESB	72	
A46	2"	RAINBIRD 200-PESB	72	
A47	2"	RAINBIRD 200-PESB	77	
A48	2"	RAINBIRD 200-PESB	86	
A49	2"	RAINBIRD 200-PESB	84	
A50	2"	RAINBIRD 200-PESB	70	
A51	2"	RAINBIRD 200-PESB	74	
A52	2"	RAINBIRD 200-PESB	86	
A53	2"	RAINBIRD 200-PESB	84	
A54	2"	RAINBIRD 200-PESB	60	
A55	2"	RAINBIRD 200-PESB	85	FIELD 14
A56	2"	RAINBIRD 200-PESB	85	
A57	2"	RAINBIRD 200-PESB	85	
A58	2"	RAINBIRD 200-PESB	85	
A59	2"	RAINBIRD 200-PESB	79	
A60	2"	RAINBIRD 200-PESB	79	
A61	2"	RAINBIRD 200-PESB	79	
A62	2"	RAINBIRD 200-PESB	79	
A63	2"	RAINBIRD 200-PESB	86	FIELD 12
A64	2"	RAINBIRD 200-PESB	74	
A65	2"	RAINBIRD 200-PESB	74	
A66	2"	RAINBIRD 200-PESB	74	
A67	2"	RAINBIRD 200-PESB	68	
A68	2"	RAINBIRD 200-PESB	80	
A69	2"	RAINBIRD 200-PESB	68	
A70	2"	RAINBIRD 200-PESB	67	
A71	2"	RAINBIRD 200-PESB	86	FIELD 13
A72	2"	RAINBIRD 200-PESB	86	
A73	2"	RAINBIRD 200-PESB	86	
A74	2"	RAINBIRD 200-PESB	86	
A75	2"	RAINBIRD 200-PESB	68	
A76	2"	RAINBIRD 200-PESB	68	
A77	2"	RAINBIRD 200-PESB	68	
A78	2"	RAINBIRD 200-PESB	80	

REFER TO SHEETS IR-2 THROUGH IR-6 FOR FIELD LAYOUTS

REFER TO SHEET IR-7 FOR INSTALLATION DETAILS AND NOTES

100 0 50 100 200

BEFORE YOU DIG.. CALL OKIE 1-800-522-6543

PDG
PLANNING DESIGN GROUP
LANDSCAPE ARCHITECTURE ■ RECREATIONAL DESIGN ■ LAND PLANNING
5314 S. YALE AVE., SUITE 710, TULSA, OK 74135
918.628.1255 918.628.1256 FAX
WWW.PLANNINGDESIGNGROUP.COM

MOORE ENGINEERING, INC.
Irrigation & Drainage Design ■ Pumping Systems
P.O. Box 514 - Stillwater, OK 74076
james@prairieglendesigns.com

REGISTERED PROFESSIONAL ENGINEER
JAMES EDWIN MOORE
11869
OKLAHOMA
DATE SIGNED 06-03-22
Moore Engineering, Inc. CA 1186
P.O. Box 514
Stillwater, OK 74076

PROJECT INFORMATION

PROJECT ADDRESS:

1001 E. ROBINSON ST., NORMAN, OKLAHOMA 73071

PROJECT NO.	NA
DATE	06/03/22
DRAWN BY	CHECKED BY
JM	JM

GRIFFIN SOCCER COMPLEX PHASE 6 NORMAN, OKLAHOMA

ISSUE/ REVISIONS

06/03/22	BID SET

OWNER:

THE CITY OF NORMAN PARKS & RECREATION
201-C WEST GRAY
NORMAN, OK 73069
(405) 366-5472

IR-1

OVERALL PLAN

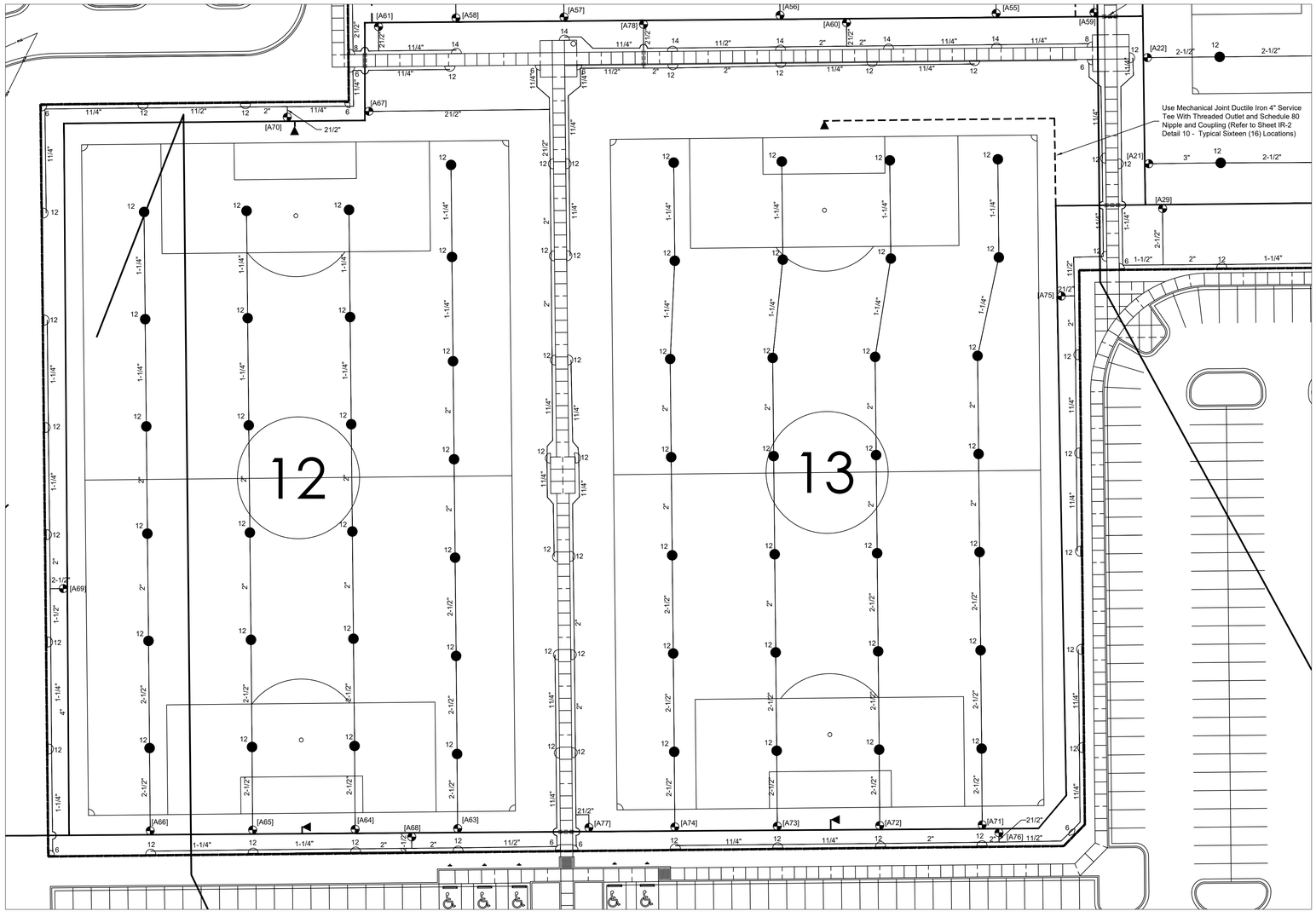

1 PHASE 6 FIELDS 12 & 13 LAYOUT PLAN - PLAN VIEW

SCALE: 1" = 30'-0"

IRRIGATION LEGEND

- 8 14 — RAIN BIRD 6504-PC (PART CIRCLE) ROTARY HEAD WITH 1" INLET AND RAIN CURTAIN NOZZLE AS SHOWN - REFER TO SHEET IR-7, DETAIL 6
- 14 — RAIN BIRD 6504-FC (FULL CIRCLE) ROTARY HEAD WITH 1" INLET AND RAIN CURTAIN NOZZLE AS SHOWN - REFER TO SHEET IR-7, DETAIL 6
- 30Q 30H — RAIN BIRD 5004-PL-PC-SAM-R (PART CIRCLE) ROTARY HEAD WITH ¾" INLET AND MPR NOZZLE AS SHOWN - REFER TO SHEET IR-7, DETAIL 7
- [A01] — RAIN BIRD PESB SCRUBBER SERIES CONTROL VALVE WITH WITH SPEARS MODEL 3629 TRU-UNION BALL VALVE - SEE VALVE CHART FOR SIZES. REFER TO SHEET IR-7, DETAIL 5
- FREEZELESS BURY HYDRANT - WOODFORD MODEL Y95 WITH BURY DEPTH AS REQUIRED FOR SITE CONDITIONS (REFER TO SHEET IR-7 DETAILS 9 AND 10 FOR PROPER APPLICATION)
- A 48 / B 48 — CONTROLLER - RAIN BIRD MODEL ESP-LXME2 CONTROLLER (12 STATION BASE WITH THREE (3) 12 STATION MODULES). EACH CONTROLLER TO BE INSTALLED IN RAIN BIRD MODEL LXMMSS STAINLESS STEEL ENCLOSURE (REFER TO SHEET IR-7 DETAIL 8)
- ISOLATION VALVE - MUELLER MODEL A-2361 MECHANICAL JOINT VALVE WITH RESILIENT WEDGE - SAME SIZE AS PIPE - (REFER TO SHEET IR-7, DETAIL 1)
- MAIN IRRIGATION LINES - 4" PVC CLASS 200 GASKET JOINT
- SUB-MAIN LINE TO FREEZELESS YARD HYDRANT - 1-1/2" SCH 40 PVC
- LATERAL IRRIGATION LINES - CL 200 SDR21 SOLVENT WELD JOINTS - SIZE AS SHOWN
- SLEEVES PVC SCH 40 - SIZE AS SHOWN ON DRAWINGS - (SEE INSTALLATION NOTE #5 AND REFER TO SHEET IR-7, DETAIL 3). SLEEVES UNDER CITY OR STATE STREETS AND ROADWAYS SHALL MEET THE REQUIREMENTS OF THE APPROPRIATE JURISDICTION

CONTROLLER "A" (FIELDS 12, 13, 18 & 21)

CONTROL VALVE LIST

VALVE ID	SIZE	MODEL	ZONE FLOW(GPM)	
A01	2"	RAINBIRD 200-PESB	86	FIELD 21
A02	2"	RAINBIRD 200-PESB	86	
A03	2"	RAINBIRD 200-PESB	86	
A04	2"	RAINBIRD 200-PESB	86	
A05	2"	RAINBIRD 200-PESB	47	
A06	2"	RAINBIRD 200-PESB	80	
A07	2"	RAINBIRD 200-PESB	80	
A08	2"	RAINBIRD 200-PESB	68	
A09	2"	RAINBIRD 200-PESB	82	
A10	2"	RAINBIRD 200-PESB	62	FIELD 18
A11	2"	RAINBIRD 200-PESB	62	
A12	2"	RAINBIRD 200-PESB	62	
A13	2"	RAINBIRD 200-PESB	62	
A14	2"	RAINBIRD 200-PESB	85	
A15	2"	RAINBIRD 200-PESB	85	
A16	2"	RAINBIRD 200-PESB	63	
A17	2"	RAINBIRD 200-PESB	68	
A18	2"	RAINBIRD 200-PESB	68	
A19	2"	RAINBIRD 200-PESB	65	
A20	2"	RAINBIRD 200-PESB	79	
A63	2"	RAINBIRD 200-PESB	86	FIELD 12
A64	2"	RAINBIRD 200-PESB	74	
A65	2"	RAINBIRD 200-PESB	74	
A66	2"	RAINBIRD 200-PESB	74	
A67	2"	RAINBIRD 200-PESB	68	
A68	2"	RAINBIRD 200-PESB	80	
A69	2"	RAINBIRD 200-PESB	68	
A70	2"	RAINBIRD 200-PESB	67	
A71	2"	RAINBIRD 200-PESB	86	FIELD 13
A72	2"	RAINBIRD 200-PESB	86	
A73	2"	RAINBIRD 200-PESB	86	
A74	2"	RAINBIRD 200-PESB	86	
A75	2"	RAINBIRD 200-PESB	68	
A76	2"	RAINBIRD 200-PESB	68	
A77	2"	RAINBIRD 200-PESB	68	
A78	2"	RAINBIRD 200-PESB	80	

REFER TO SHEET IR-7 FOR INSTALLATION DETAILS AND NOTES

30 0 15 30 60

BEFORE YOU DIG. CALL OKIE 1-800-522-6543

PDG
PLANNING DESIGN GROUP
LANDSCAPE ARCHITECTURE ■ RECREATIONAL DESIGN ■ LAND PLANNING
5314 S. YALE AVE., SUITE 710, TULSA, OK 74135
918.628.1255 918.628.1256 FAX
WWW.PLANNINGDESIGNGROUP.COM

MOORE ENGINEERING, INC.
Irrigation & Drainage Design ■ Pumping Systems
P.O. Box 514 - Stillwater, OK 74076
james@prairieglendesigns.com

REGISTERED PROFESSIONAL ENGINEER
JAMES EDWIN MOORE
11869
OKLAHOMA
DATE SIGNED 06-03-22
Moore Engineering, Inc. CA 1186
P.O. Box 514
Stillwater, OK 74076

PROJECT INFORMATION

PROJECT ADDRESS:

1001 E. ROBINSON ST.,
NORMAN, OKLAHOMA 73071

PROJECT NO.	NA
DATE	06/03/22
DRAWN BY	CHECKED BY
JM	JM

GRIFFIN SOCCER COMPLEX
PHASE 6
NORMAN, OKLAHOMA

ISSUE/ REVISIONS

06/03/22	BID SET

OWNER:

THE CITY OF NORMAN PARKS & RECREATION
201-C WEST GRAY
NORMAN, OK 73069
(405) 366-5472

IR-2

FIELDS 12 & 13
IRRIGATION PLAN

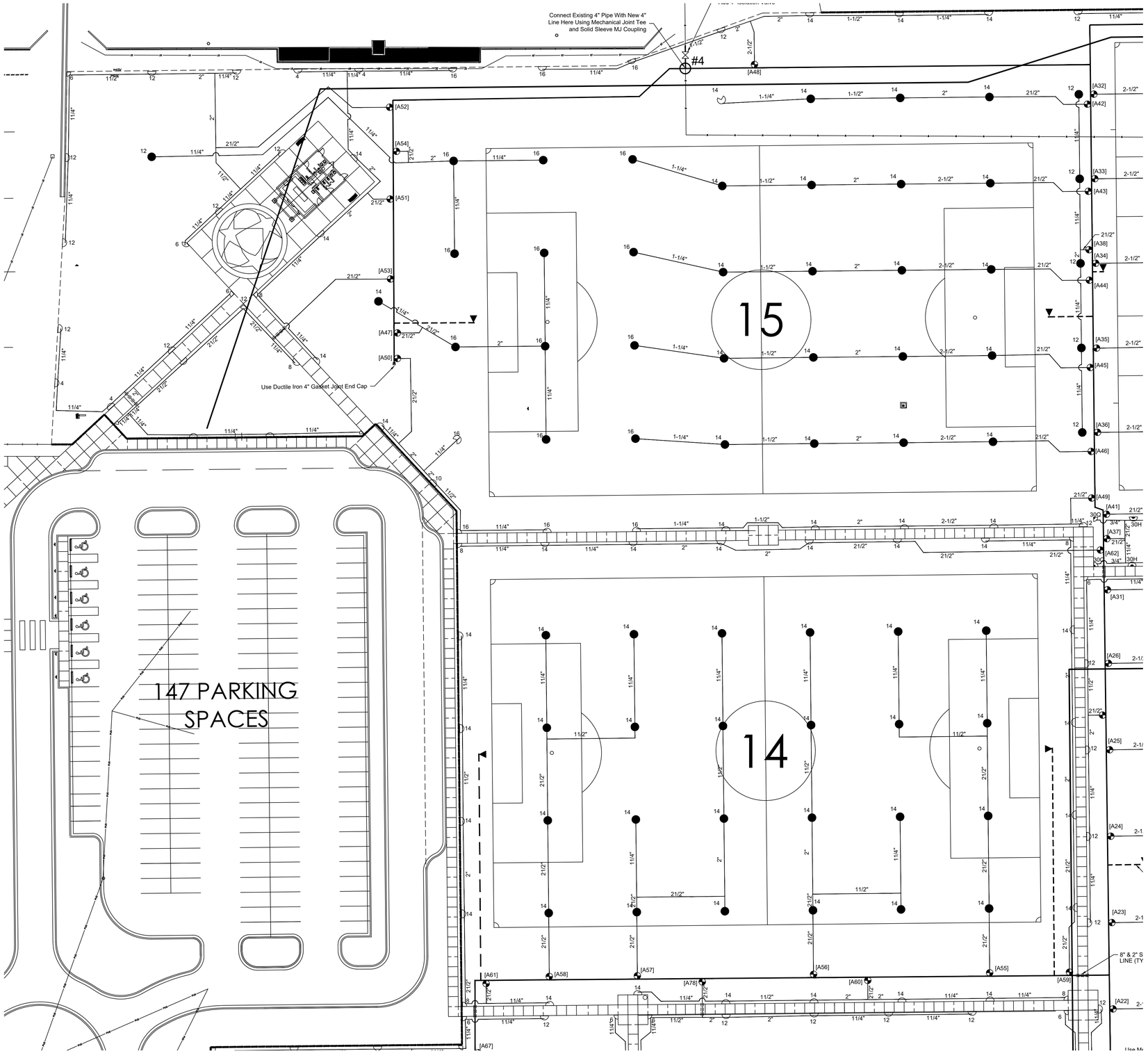

1 PHASE 6 FIELDS 14 & 15 LAYOUT PLAN - PLAN VIEW

SCALE: 1" = 30'-0"

IRRIGATION LEGEND

8 14	RAIN BIRD 6504-PC (PART CIRCLE) ROTARY HEAD WITH 1" INLET AND RAIN CURTAIN NOZZLE AS SHOWN - REFER TO SHEET IR-7, DETAIL 6
14	RAIN BIRD 6504-FC (FULL CIRCLE) ROTARY HEAD WITH 1" INLET AND RAIN CURTAIN NOZZLE AS SHOWN - REFER TO SHEET IR-7, DETAIL 6
30Q 30H	RAIN BIRD 5004-PL-PC-SAM-R (PART CIRCLE) ROTARY HEAD WITH 3/4" INLET AND MPR NOZZLE AS SHOWN - REFER TO SHEET IR-7, DETAIL 7
[A01]	RAIN BIRD PESB SCRUBBER SERIES CONTROL VALVE WITH WITH SPEARS MODEL 3629 TRU-UNION BALL VALVE - SEE VALVE CHART FOR SIZES. REFER TO SHEET IR-7, DETAIL 5
	FREEZELESS BURY HYDRANT - WOODFORD MODEL Y95 WITH BURY DEPTH AS REQUIRED FOR SITE CONDITIONS (REFER TO SHEET IR-7 DETAILS 9 AND 10 FOR PROPER APPLICATION)
A 48 B 48	CONTROLLER - RAIN BIRD MODEL ESP-LXME2 CONTROLLER (12 STATION BASE WITH THREE (3) 12 STATION MODULES). EACH CONTROLLER TO BE INSTALLED IN RAIN BIRD MODEL LXMMSS STAINLESS STEEL ENCLOSURE (REFER TO SHEET IR-7 DETAIL 8)
	ISOLATION VALVE - MUELLER MODEL A-2361 MECHANICAL JOINT VALVE WITH RESILIENT WEDGE - SAME SIZE AS PIPE - (REFER TO SHEET IR-7, DETAIL 1)
	MAIN IRRIGATION LINES - 4" PVC CLASS 200 GASKET JOINT SUB-MAIN LINE TO FREEZELESS YARD HYDRANT - 1-1/2" SCH 40 PVC LATERAL IRRIGATION LINES - CL 200 SDR21 SOLVENT WELD JOINTS - SIZE AS SHOWN
	SLEEVES PVC SCH 40 - SIZE AS SHOWN ON DRAWINGS - (SEE INSTALLATION NOTE #5 AND REFER TO SHEET IR-7, DETAIL 3). SLEEVES UNDER CITY OR STATE STREETS AND ROADWAYS SHALL MEET THE REQUIREMENTS OF THE APPROPRIATE JURISDICTION

CONTROLLER "B" (FIELDS 14, 15, 16 & 17)

CONTROL VALVE LIST

VALVE ID	SIZE	MODEL	ZONE FLOW(GPM)	
A21	2"	RAINBIRD 200-PESB	86	FIELD 16
A22	2"	RAINBIRD 200-PESB	86	
A23	2"	RAINBIRD 200-PESB	86	
A24	2"	RAINBIRD 200-PESB	86	
A25	2"	RAINBIRD 200-PESB	86	
A26	1"	RAINBIRD 100-PESB	86	
A27	2"	RAINBIRD 200-PESB	68	
A28	2"	RAINBIRD 200-PESB	68	
A29	2"	RAINBIRD 200-PESB	68	
A30	2"	RAINBIRD 200-PESB	68	
A31	2"	RAINBIRD 200-PESB	67	
A32	2"	RAINBIRD 200-PESB	86	FIELD 17
A33	2"	RAINBIRD 200-PESB	86	
A34	2"	RAINBIRD 200-PESB	86	
A35	2"	RAINBIRD 200-PESB	86	
A36	2"	RAINBIRD 200-PESB	86	
A37	2"	RAINBIRD 200-PESB	75	
A38	2"	RAINBIRD 200-PESB	62	
A39	2"	RAINBIRD 200-PESB	86	
A40	2"	RAINBIRD 200-PESB	84	
A41	2"	RAINBIRD 200-PESB	86	
A42	2"	RAINBIRD 200-PESB	57	FIELD 15
A43	2"	RAINBIRD 200-PESB	72	
A44	2"	RAINBIRD 200-PESB	72	
A45	2"	RAINBIRD 200-PESB	72	
A46	2"	RAINBIRD 200-PESB	72	
A47	2"	RAINBIRD 200-PESB	77	
A48	2"	RAINBIRD 200-PESB	86	
A49	2"	RAINBIRD 200-PESB	84	
A50	2"	RAINBIRD 200-PESB	70	
A51	2"	RAINBIRD 200-PESB	74	
A52	2"	RAINBIRD 200-PESB	86	
A53	2"	RAINBIRD 200-PESB	84	
A54	2"	RAINBIRD 200-PESB	60	
A55	2"	RAINBIRD 200-PESB	85	FIELD 14
A56	2"	RAINBIRD 200-PESB	85	
A57	2"	RAINBIRD 200-PESB	85	
A58	2"	RAINBIRD 200-PESB	85	
A59	2"	RAINBIRD 200-PESB	79	
A60	2"	RAINBIRD 200-PESB	79	
A61	2"	RAINBIRD 200-PESB	79	
A62	2"	RAINBIRD 200-PESB	79	

REFER TO SHEET IR-7 FOR INSTALLATION DETAILS AND NOTES

PDG
PLANNING DESIGN GROUP
LANDSCAPE ARCHITECTURE ■ RECREATIONAL DESIGN ■ LAND PLANNING
5314 S. YALE AVE., SUITE 710, TULSA, OK 74135
918.628.1255 918.628.1256 FAX
WWW.PLANNINGDESIGNGROUP.COM

MOORE ENGINEERING, INC.
Irrigation & Drainage Design ■ Pumping Systems
P.O. Box 514 - Stillwater, OK 74076
james@prairieglendesigns.com

REGISTERED PROFESSIONAL ENGINEER
JAMES EDWIN MOORE
11869
OKLAHOMA
DATE SIGNED 06-03-22
Moore Engineering, Inc. CA 1186
P.O. Box 514
Stillwater, OK 74076

PROJECT INFORMATION

PROJECT ADDRESS:

1001 E. ROBINSON ST.,
NORMAN, OKLAHOMA 73071

PROJECT NO.	NA
DATE	06/03/22
DRAWN BY	CHECKED BY
JM	JM

GRIFFIN SOCCER COMPLEX
PHASE 6
NORMAN, OKLAHOMA

ISSUE/ REVISIONS

06/03/22	BID SET

OWNER:

THE CITY OF NORMAN PARKS & RECREATION
201-C WEST GRAY
NORMAN, OK 73069
(405) 366-5472

BEFORE YOU DIG... CALL OKIE 1-800-522-6543

IR-3

FIELDS 14 & 15 IRRIGATION PLAN

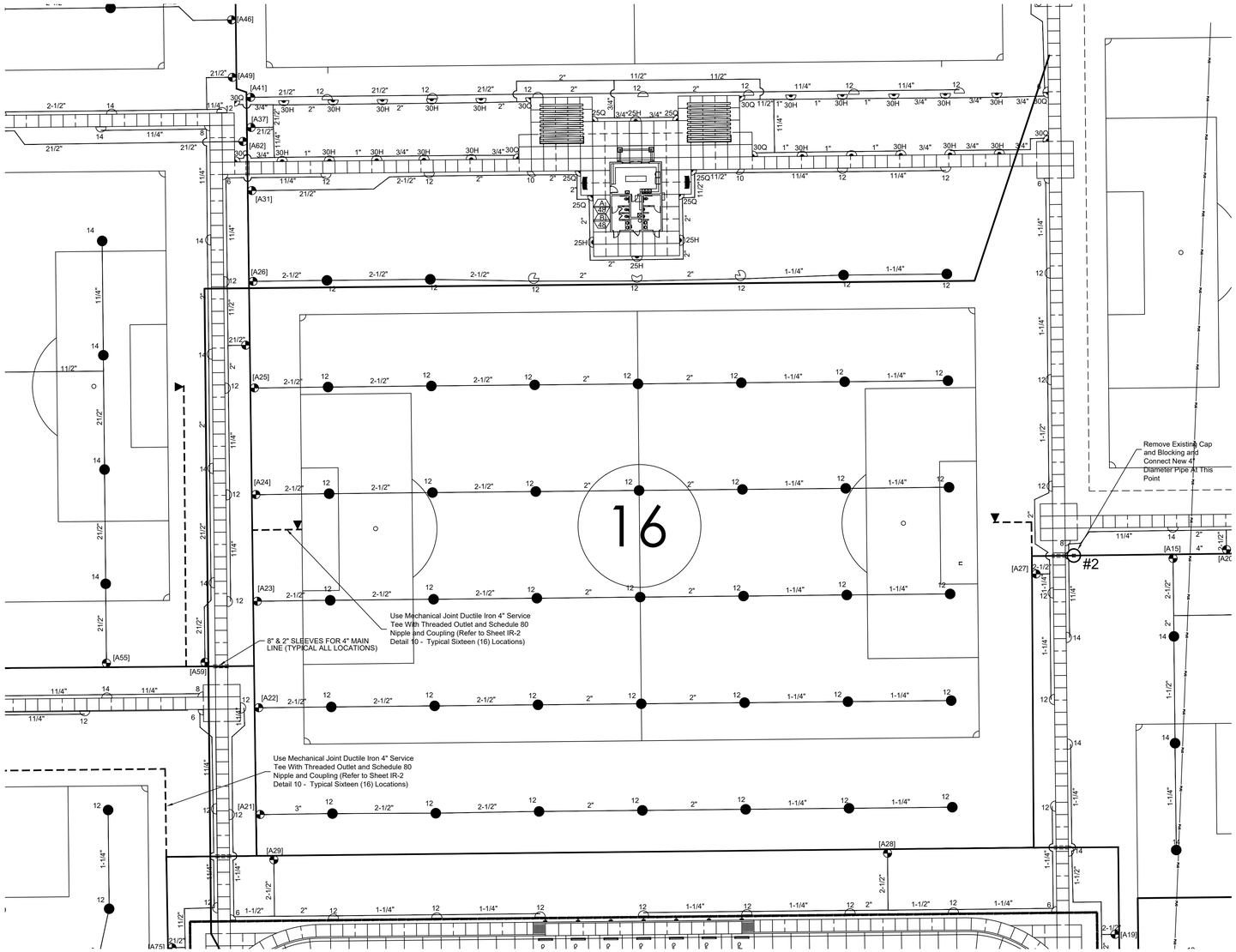

1 PHASE 6 FIELD 16 LAYOUT PLAN - PLAN VIEW

SCALE: 1" = 30'-0"

30 0 15 30 60

IRRIGATION LEGEND

- RAIN BIRD 6504-PC (PART CIRCLE) ROTARY HEAD WITH 1" INLET AND RAIN CURTAIN NOZZLE AS SHOWN - REFER TO SHEET IR-7, DETAIL 6
- RAIN BIRD 6504-FC (FULL CIRCLE) ROTARY HEAD WITH 1" INLET AND RAIN CURTAIN NOZZLE AS SHOWN - REFER TO SHEET IR-7, DETAIL 6
- 30Q 30H RAIN BIRD 5004-PL-PC-SAM-R (PART CIRCLE) ROTARY HEAD WITH ¾" INLET AND MPR NOZZLE AS SHOWN - REFER TO SHEET IR-7, DETAIL 7
- [A01] RAIN BIRD PESB SCRUBBER SERIES CONTROL VALVE WITH WITH SPEARS MODEL 3629 TRU-UNION BALL VALVE - SEE VALVE CHART FOR SIZES. REFER TO SHEET IR-7, DETAIL 5
- FREEZELESS BURY HYDRANT - WOODFORD MODEL Y95 WITH BURY DEPTH AS REQUIRED FOR SITE CONDITIONS (REFER TO SHEET IR-7 DETAILS 9 AND 10 FOR PROPER APPLICATION)
- A 48 / B 48 CONTROLLER - RAIN BIRD MODEL ESP-LXME2 CONTROLLER (12 STATION BASE WITH THREE (3) 12 STATION MODULES). EACH CONTROLLER TO BE INSTALLED IN RAIN BIRD MODEL LXMMSS STAINLESS STEEL ENCLOSURE (REFER TO SHEET IR-7 DETAIL 8)
- ISOLATION VALVE - MUELLER MODEL A-2361 MECHANICAL JOINT VALVE WITH RESILIENT WEDGE - SAME SIZE AS PIPE - (REFER TO SHEET IR-7, DETAIL 1)
- MAIN IRRIGATION LINES - 4" PVC CLASS 200 GASKET JOINT
- SUB-MAIN LINE TO FREEZELESS YARD HYDRANT - 1-1/2" SCH 40 PVC
- LATERAL IRRIGATION LINES - CL 200 SDR21 SOLVENT WELD JOINTS - SIZE AS SHOWN
- SLEEVES PVC SCH 40 - SIZE AS SHOWN ON DRAWINGS - (SEE INSTALLATION NOTE #5 AND REFER TO SHEET IR-7, DETAIL 3). SLEEVES UNDER CITY OR STATE STREETS AND ROADWAYS SHALL MEET THE REQUIREMENTS OF THE APPROPRIATE JURISDICTION

CONTROLLER "A" (FIELDS 14, 15, 16 & 17)

CONTROL VALVE LIST

VALVE ID	SIZE	MODEL	ZONE FLOW(GPM)	
A21	2"	RAINBIRD 200-PESB	86	FIELD 16
A22	2"	RAINBIRD 200-PESB	86	
A23	2"	RAINBIRD 200-PESB	86	
A24	2"	RAINBIRD 200-PESB	86	
A25	2"	RAINBIRD 200-PESB	86	
A26	1"	RAINBIRD 100-PESB	86	
A27	2"	RAINBIRD 200-PESB	68	
A28	2"	RAINBIRD 200-PESB	68	
A29	2"	RAINBIRD 200-PESB	68	
A30	2"	RAINBIRD 200-PESB	68	
A31	2"	RAINBIRD 200-PESB	67	
A32	2"	RAINBIRD 200-PESB	86	FIELD 17
A33	2"	RAINBIRD 200-PESB	86	
A34	2"	RAINBIRD 200-PESB	86	
A35	2"	RAINBIRD 200-PESB	86	
A36	2"	RAINBIRD 200-PESB	86	
A37	2"	RAINBIRD 200-PESB	75	
A38	2"	RAINBIRD 200-PESB	62	
A39	2"	RAINBIRD 200-PESB	86	
A40	2"	RAINBIRD 200-PESB	84	
A41	2"	RAINBIRD 200-PESB	86	
A42	2"	RAINBIRD 200-PESB	57	FIELD 15
A43	2"	RAINBIRD 200-PESB	72	
A44	2"	RAINBIRD 200-PESB	72	
A45	2"	RAINBIRD 200-PESB	72	
A46	2"	RAINBIRD 200-PESB	72	
A47	2"	RAINBIRD 200-PESB	77	
A48	2"	RAINBIRD 200-PESB	86	
A49	2"	RAINBIRD 200-PESB	84	
A50	2"	RAINBIRD 200-PESB	70	
A51	2"	RAINBIRD 200-PESB	74	
A52	2"	RAINBIRD 200-PESB	86	
A53	2"	RAINBIRD 200-PESB	84	
A54	2"	RAINBIRD 200-PESB	60	
A55	2"	RAINBIRD 200-PESB	85	FIELD 14
A56	2"	RAINBIRD 200-PESB	85	
A57	2"	RAINBIRD 200-PESB	85	
A58	2"	RAINBIRD 200-PESB	85	
A59	2"	RAINBIRD 200-PESB	79	
A60	2"	RAINBIRD 200-PESB	79	
A61	2"	RAINBIRD 200-PESB	79	
A62	2"	RAINBIRD 200-PESB	79	

REFER TO SHEET IR-7 FOR INSTALLATION DETAILS AND NOTES

BEFORE YOU DIG... CALL OKIE 1-800-522-6543

PDG
PLANNING DESIGN GROUP
LANDSCAPE ARCHITECTURE ■ RECREATIONAL DESIGN ■ LAND PLANNING
5314 S. YALE AVE., SUITE 710, TULSA, OK 74135
918.628.1255 918.628.1256 FAX
WWW.PLANNINGDESIGNGROUP.COM

MOORE ENGINEERING, INC.
Irrigation & Drainage Design ■ Pumping Systems
P.O. Box 514 - Stillwater, OK 74076
james@prairieglendesigns.com

REGISTERED PROFESSIONAL ENGINEER
JAMES EDWIN MOORE
11869
OKLAHOMA
DATE SIGNED 06-03-22
Moore Engineering, Inc. CA 1186
P.O. Box 514
Stillwater, OK 74076

PROJECT INFORMATION

PROJECT ADDRESS:

1001 E. ROBINSON ST.,
NORMAN, OKLAHOMA 73071

PROJECT NO.	NA
DATE	06/03/22
DRAWN BY	CHECKED BY
JM	JM

GRIFFIN SOCCER COMPLEX
PHASE 6
NORMAN, OKLAHOMA

ISSUE/ REVISIONS

06/03/22	BID SET

OWNER:

THE CITY OF NORMAN PARKS & RECREATION
201-C WEST GRAY
NORMAN, OK 73069
(405) 366-5472

IR-4

FIELD 16 IRRIGATION PLAN

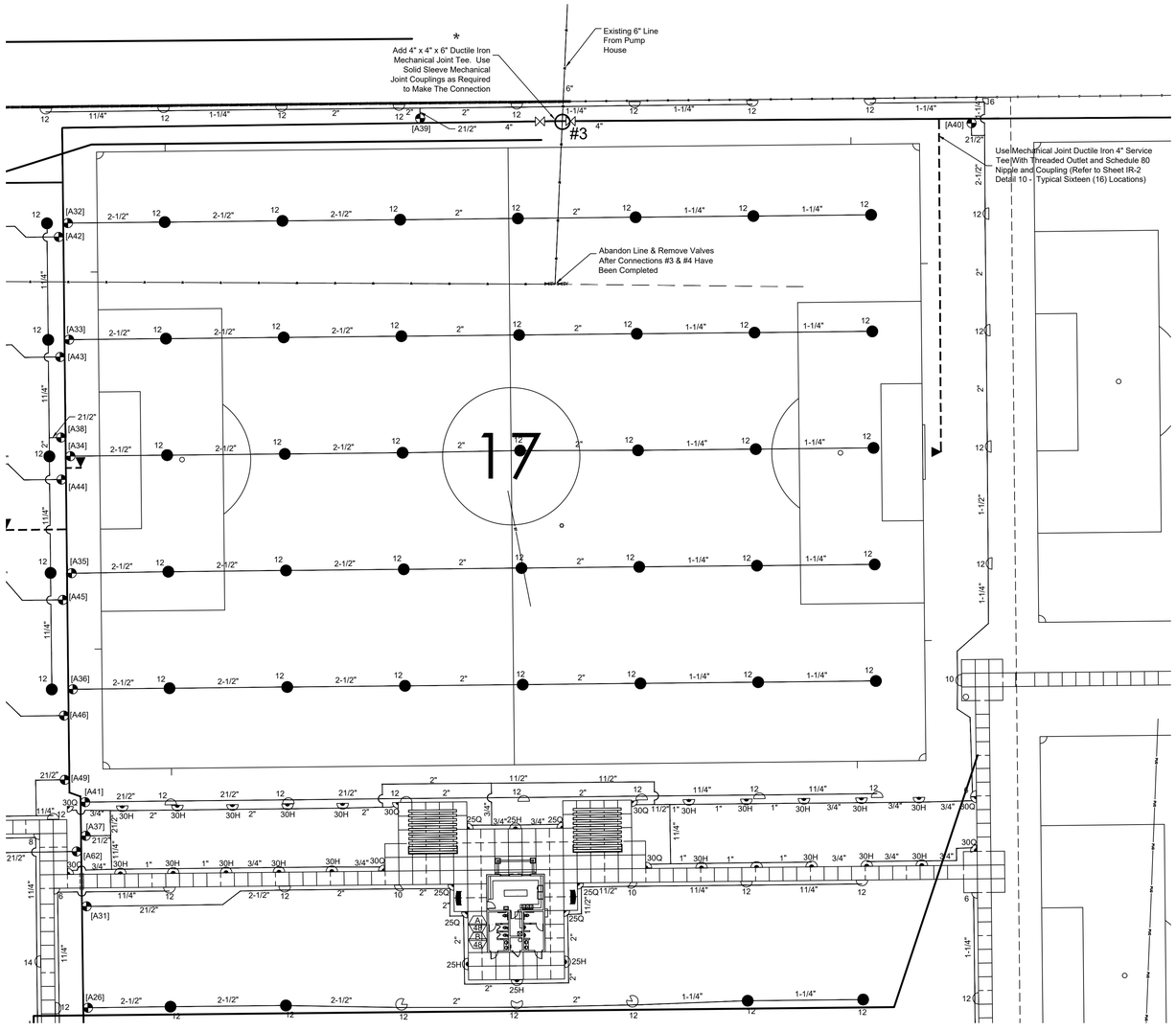

1 PHASE 6 FIELD 17 LAYOUT PLAN - PLAN VIEW

SCALE: 1" = 30'-0"

IRRIGATION LEGEND

8 14	RAIN BIRD 6504-PC (PART CIRCLE) ROTARY HEAD WITH 1" INLET AND RAIN CURTAIN NOZZLE AS SHOWN - REFER TO SHEET IR-7, DETAIL 6
14	RAIN BIRD 6504-FC (FULL CIRCLE) ROTARY HEAD WITH 1" INLET AND RAIN CURTAIN NOZZLE AS SHOWN - REFER TO SHEET IR-7, DETAIL 6
30Q 30H	RAIN BIRD 5004-PL-PC-SAM-R (PART CIRCLE) ROTARY HEAD WITH ¾" INLET AND MPR NOZZLE AS SHOWN - REFER TO SHEET IR-7, DETAIL 7
[A01]	RAIN BIRD PESB SCRUBBER SERIES CONTROL VALVE WITH WITH SPEARS MODEL 3629 TRU-UNION BALL VALVE - SEE VALVE CHART FOR SIZES. REFER TO SHEET IR-7, DETAIL 5
	FREEZELESS BURY HYDRANT - WOODFORD MODEL Y95 WITH BURY DEPTH AS REQUIRED FOR SITE CONDITIONS (REFER TO SHEET IR-7 DETAILS 9 AND 10 FOR PROPER APPLICATION)
A 48 / B 48	CONTROLLER - RAIN BIRD MODEL ESP-LXME2 CONTROLLER (12 STATION BASE WITH THREE (3) 12 STATION MODULES). EACH CONTROLLER TO BE INSTALLED IN RAIN BIRD MODEL LXMMSS STAINLESS STEEL ENCLOSURE (REFER TO SHEET IR-7 DETAIL 8)
	ISOLATION VALVE - MUELLER MODEL A-2361 MECHANICAL JOINT VALVE WITH RESILIENT WEDGE - SAME SIZE AS PIPE - (REFER TO SHEET IR-7, DETAIL 1)
	MAIN IRRIGATION LINES - 4" PVC CLASS 200 GASKET JOINT SUB-MAIN LINE TO FREEZELESS YARD HYDRANT - 1-1/2" SCH 40 PVC LATERAL IRRIGATION LINES - CL 200 SDR21 SOLVENT WELD JOINTS - SIZE AS SHOWN
	SLEEVES PVC SCH 40 - SIZE AS SHOWN ON DRAWINGS - (SEE INSTALLATION NOTE #5 AND REFER TO SHEET IR-7, DETAIL 3). SLEEVES UNDER CITY OR STATE STREETS AND ROADWAYS SHALL MEET THE REQUIREMENTS OF THE APPROPRIATE JURISDICTION

CONTROLLER "A" (FIELDS 14, 15, 16 & 17)

CONTROL VALVE LIST

VALVE ID	SIZE	MODEL	ZONE FLOW(GPM)	
A21	2"	RAINBIRD 200-PESB	86	FIELD 16
A22	2"	RAINBIRD 200-PESB	86	
A23	2"	RAINBIRD 200-PESB	86	
A24	2"	RAINBIRD 200-PESB	86	
A25	2"	RAINBIRD 200-PESB	86	
A26	1"	RAINBIRD 100-PESB	86	
A27	2"	RAINBIRD 200-PESB	68	
A28	2"	RAINBIRD 200-PESB	68	
A29	2"	RAINBIRD 200-PESB	68	
A30	2"	RAINBIRD 200-PESB	68	
A31	2"	RAINBIRD 200-PESB	67	
A32	2"	RAINBIRD 200-PESB	86	FIELD 17
A33	2"	RAINBIRD 200-PESB	86	
A34	2"	RAINBIRD 200-PESB	86	
A35	2"	RAINBIRD 200-PESB	86	
A36	2"	RAINBIRD 200-PESB	86	
A37	2"	RAINBIRD 200-PESB	75	
A38	2"	RAINBIRD 200-PESB	62	
A39	2"	RAINBIRD 200-PESB	86	
A40	2"	RAINBIRD 200-PESB	84	
A41	2"	RAINBIRD 200-PESB	86	
A42	2"	RAINBIRD 200-PESB	57	FIELD 15
A43	2"	RAINBIRD 200-PESB	72	
A44	2"	RAINBIRD 200-PESB	72	
A45	2"	RAINBIRD 200-PESB	72	
A46	2"	RAINBIRD 200-PESB	72	
A47	2"	RAINBIRD 200-PESB	77	
A48	2"	RAINBIRD 200-PESB	86	
A49	2"	RAINBIRD 200-PESB	84	
A50	2"	RAINBIRD 200-PESB	70	
A51	2"	RAINBIRD 200-PESB	74	
A52	2"	RAINBIRD 200-PESB	86	
A53	2"	RAINBIRD 200-PESB	84	
A54	2"	RAINBIRD 200-PESB	60	
A55	2"	RAINBIRD 200-PESB	85	FIELD 14
A56	2"	RAINBIRD 200-PESB	85	
A57	2"	RAINBIRD 200-PESB	85	
A58	2"	RAINBIRD 200-PESB	85	
A59	2"	RAINBIRD 200-PESB	79	
A60	2"	RAINBIRD 200-PESB	79	
A61	2"	RAINBIRD 200-PESB	79	
A62	2"	RAINBIRD 200-PESB	79	

REFER TO SHEET IR-7 FOR INSTALLATION DETAILS AND NOTES

30 0 15 30 60

BEFORE YOU DIG.. CALL OKIE 1-800-522-6543

PDG
PLANNING DESIGN GROUP
LANDSCAPE ARCHITECTURE ■ RECREATIONAL DESIGN ■ LAND PLANNING
5314 S. YALE AVE., SUITE 710, TULSA, OK 74135
918.628.1255 918.628.1256 FAX
WWW.PLANNINGDESIGNGROUP.COM

MOORE ENGINEERING, INC.
Irrigation & Drainage Design ■ Pumping Systems
P.O. Box 514 - Stillwater, OK 74076
james@prairieglendesigns.com

REGISTERED PROFESSIONAL ENGINEER JAMES ERWIN MOORE 11869 OKLAHOMA
DATE SIGNED 06-03-22
Moore Engineering, Inc. CA 1186
P.O. Box 514
Stillwater, OK 74076

PROJECT INFORMATION

PROJECT ADDRESS:

1001 E. ROBINSON ST.,
NORMAN, OKLAHOMA 73071

PROJECT NO.	NA
DATE	06/03/22
DRAWN BY	CHECKED BY
JM	JM

GRIFFIN SOCCER COMPLEX
PHASE 6
NORMAN, OKLAHOMA

ISSUE/ REVISIONS

06/03/22	BID SET

OWNER:

THE CITY OF NORMAN PARKS & RECREATION
201-C WEST GRAY
NORMAN, OK 73069
(405) 366-5472

IR-5

FIELD 17
IRRIGATION PLAN

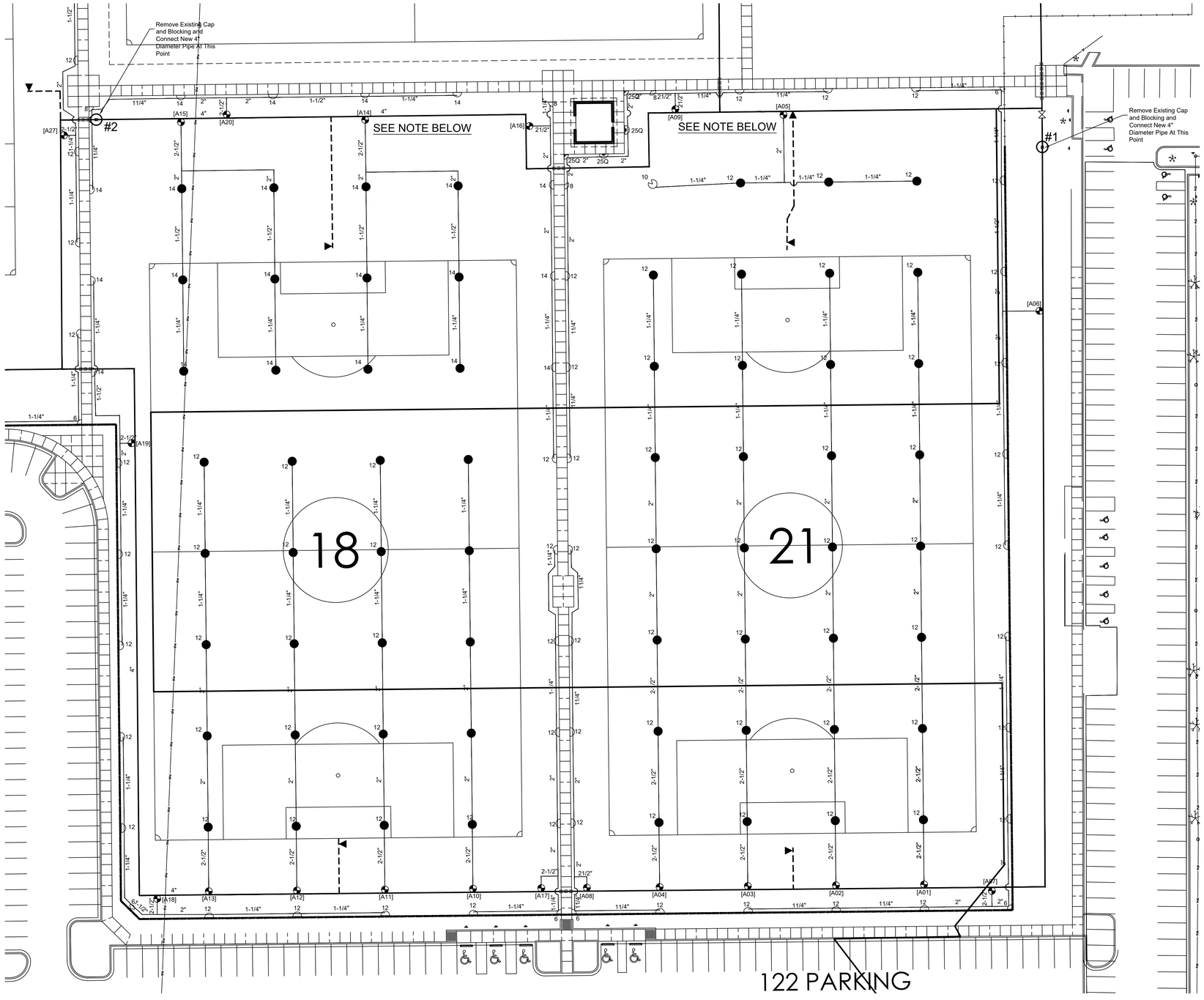

1 PHASE 6 FIELDS 18 & 21 LAYOUT PLAN - PLAN VIEW

SCALE: 1" = 30'-0"

REFER TO SHEET IR-7 FOR INSTALLATION DETAILS AND NOTES

IRRIGATION LEGEND

- 8 14 — RAIN BIRD 6504-PC (PART CIRCLE) ROTARY HEAD WITH 1" INLET AND RAIN CURTAIN NOZZLE AS SHOWN - REFER TO SHEET IR-7, DETAIL 6
- 14 — RAIN BIRD 6504-FC (FULL CIRCLE) ROTARY HEAD WITH 1" INLET AND RAIN CURTAIN NOZZLE AS SHOWN - REFER TO SHEET IR-7, DETAIL 6
- 30Q 30H — RAIN BIRD 5004-PL-PC-SAM-R (PART CIRCLE) ROTARY HEAD WITH 3/4" INLET AND MPR NOZZLE AS SHOWN - REFER TO SHEET IR-7, DETAIL 7
- [A01] — RAIN BIRD PESB SCRUBBER SERIES CONTROL VALVE WITH WITH SPEARS MODEL 3629 TRU-UNION BALL VALVE - SEE VALVE CHART FOR SIZES. REFER TO SHEET IR-7, DETAIL 5
- FREEZELESS BURY HYDRANT - WOODFORD MODEL Y95 WITH BURY DEPTH AS REQUIRED FOR SITE CONDITIONS (REFER TO SHEET IR-7 DETAILS 9 AND 10 FOR PROPER APPLICATION)
- A 48 / B 48 — CONTROLLER - RAIN BIRD MODEL ESP-LXME2 CONTROLLER (12 STATION BASE WITH THREE (3) 12 STATION MODULES). EACH CONTROLLER TO BE INSTALLED IN RAIN BIRD MODEL LXMMSS STAINLESS STEEL ENCLOSURE (REFER TO SHEET IR-7 DETAIL 8)
- ISOLATION VALVE - MUELLER MODEL A-2361 MECHANICAL JOINT VALVE WITH RESILIENT WEDGE - SAME SIZE AS PIPE - (REFER TO SHEET IR-7, DETAIL 1)
- MAIN IRRIGATION LINES - 4" PVC CLASS 200 GASKET JOINT
- SUB-MAIN LINE TO FREEZELESS YARD HYDRANT - 1-1/2" SCH 40 PVC
- LATERAL IRRIGATION LINES - CL 200 SDR21 SOLVENT WELD JOINTS - SIZE AS SHOWN
- SLEEVES PVC SCH 40 - SIZE AS SHOWN ON DRAWINGS - (SEE INSTALLATION NOTE #5 AND REFER TO SHEET IR-7, DETAIL 3). SLEEVES UNDER CITY OR STATE STREETS AND ROADWAYS SHALL MEET THE REQUIREMENTS OF THE APPROPRIATE JURISDICTION

CONTROLLER "A" (FIELDS 12, 13, 18 & 21)

CONTROL VALVE LIST

VALVE ID	SIZE	MODEL	ZONE FLOW(GPM)	
A01	2"	RAINBIRD 200-PESB	86	FIELD 21
A02	2"	RAINBIRD 200-PESB	86	
A03	2"	RAINBIRD 200-PESB	86	
A04	2"	RAINBIRD 200-PESB	86	
A05	2"	RAINBIRD 200-PESB	47	
A06	2"	RAINBIRD 200-PESB	80	
A07	2"	RAINBIRD 200-PESB	80	
A08	2"	RAINBIRD 200-PESB	68	
A09	2"	RAINBIRD 200-PESB	82	
A10	2"	RAINBIRD 200-PESB	62	FIELD 18
A11	2"	RAINBIRD 200-PESB	62	
A12	2"	RAINBIRD 200-PESB	62	
A13	2"	RAINBIRD 200-PESB	62	
A14	2"	RAINBIRD 200-PESB	85	
A15	2"	RAINBIRD 200-PESB	85	
A16	2"	RAINBIRD 200-PESB	63	
A17	2"	RAINBIRD 200-PESB	68	
A18	2"	RAINBIRD 200-PESB	68	
A19	2"	RAINBIRD 200-PESB	65	
A20	2"	RAINBIRD 200-PESB	79	
A63	2"	RAINBIRD 200-PESB	86	FIELD 12
A64	2"	RAINBIRD 200-PESB	74	
A65	2"	RAINBIRD 200-PESB	74	
A66	2"	RAINBIRD 200-PESB	74	
A67	2"	RAINBIRD 200-PESB	68	
A68	2"	RAINBIRD 200-PESB	80	
A69	2"	RAINBIRD 200-PESB	68	
A70	2"	RAINBIRD 200-PESB	67	
A71	2"	RAINBIRD 200-PESB	86	FIELD 13
A72	2"	RAINBIRD 200-PESB	86	
A73	2"	RAINBIRD 200-PESB	86	
A74	2"	RAINBIRD 200-PESB	86	
A75	2"	RAINBIRD 200-PESB	68	
A76	2"	RAINBIRD 200-PESB	68	
A77	2"	RAINBIRD 200-PESB	68	
A78	2"	RAINBIRD 200-PESB	80	

NOTE: CONTROL VALVES A05, A14, A15 AND A16 AND TWO (2) CONNECTIONS FOR THE 1-1/2" FREEZELESS HYDRANT LINES TO BE INSTALLED BY OTHERS AS A PART OF PHASE 5 PRIOR TO THE CONSTRUCTION OF FIELDS 18 AND 21. PHASE 6 CONTRACTOR SHALL BE RESPONSIBLE FOR THE CONNECTION AND INSTALLATION OF LATERAL PIPE DOWNSTREAM OF THE CONTROL VALVES AS WELL AS CONTROL WIRE AND WIRE CONNECTIONS.

30 0 15 30 60

BEFORE YOU DIG.. CALL OKIE 1-800-522-6543

PDG
PLANNING DESIGN GROUP
LANDSCAPE ARCHITECTURE • RECREATIONAL DESIGN • LAND PLANNING
5314 S. YALE AVE., SUITE 710, TULSA, OK 74135
918.628.1255 918.628.1256 FAX
WWW.PLANNINGDESIGNGROUP.COM

MOORE ENGINEERING, INC.
Irrigation & Drainage Design • Pumping Systems
P.O. Box 514 - Stillwater, OK 74076
james@prairieglendesigns.com

REGISTERED PROFESSIONAL ENGINEER
JAMES EDWIN MOORE
11869
OKLAHOMA
DATE SIGNED 06-03-22
Moore Engineering, Inc. CA 1186
P.O. Box 514
Stillwater, OK 74076

PROJECT INFORMATION

PROJECT ADDRESS:

1001 E. ROBINSON ST.,
NORMAN, OKLAHOMA 73071

PROJECT NO.	NA
DATE	06/03/22
DRAWN BY	CHECKED BY
JM	JM

GRIFFIN SOCCER COMPLEX PHASE 6 NORMAN, OKLAHOMA

ISSUE/ REVISIONS

06/03/22	BID SET

OWNER:

THE CITY OF NORMAN PARKS & RECREATION
201-C WEST GRAY
NORMAN, OK 73069
(405) 366-5472

IR-6

FIELDS 18 & 21 IRRIGATION PLAN

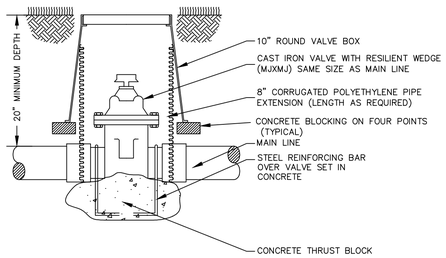

1 ISOLATION VALVE ASSEMBLY-TYPICAL SECTION
NOT TO SCALE

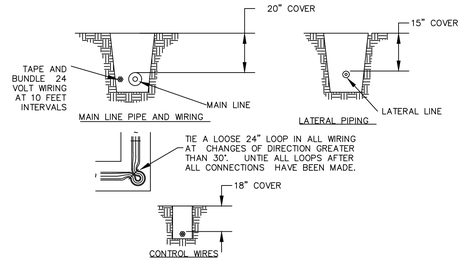

2 TYPICAL TRENCH SECTION
NOT TO SCALE

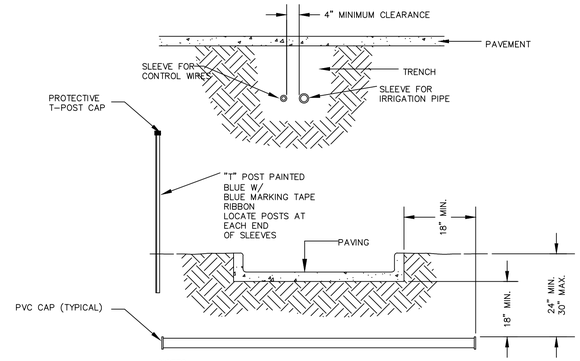

NOTES:

1. ALL PVC IRRIGATION SLEEVES TO BE SCHEDULE 40 PIPE.
2. ALL JOINTS TO BE SOLVENT WELDED AND WATERTIGHT.
3. MECHANICALLY TAMP TO 95% PROCTOR DENSITY AND/OR FILL CONCRETE PER PROJECT SPECIFICATIONS.
4. ALL COMPONENTS SHOWN AND ASSOCIATED WITH THIS ASSEMBLY INSTALLATION SHALL BE FIGURED INTO THE UNIT COST OF THE DOUBLE SLEEVE ASSEMBLY.

3 PIPE AND WIRE SLEEVES - TYPICAL DETAIL
NOT TO SCALE

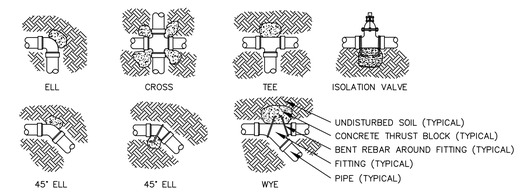

NOTES:

1. GASKET JOINT MAIN LINES SHALL RECEIVE CONCRETE THRUST BLOCKS AT ALL POINTS OF CHANGE IN DIRECTION INCLUDING ISOLATION VALVES.
2. SEE IRRIGATION SPECIFICATIONS AND PIPE MANUFACTURER'S RECOMMENDATIONS FOR TYPE AND SIZE OF THRUST BLOCK TO FORM. SIZE SHALL BE APPROPRIATE FOR FITTING ARRANGEMENT, WATER PRESSURE AND SOIL TYPE ENCOUNTERED.
3. THRUST BLOCKS SHALL BE FORMED AGAINST A SOLID TRENCH WALL.
4. ALL PIPE AND FITTINGS SHALL BE COVERED WITH MINIMUM 4 MIL VISQUEEN PLASTIC WRAP PRIOR TO POURING THRUST BLOCK.

4 THRUST BLOCK DETAILS
NOT TO SCALE

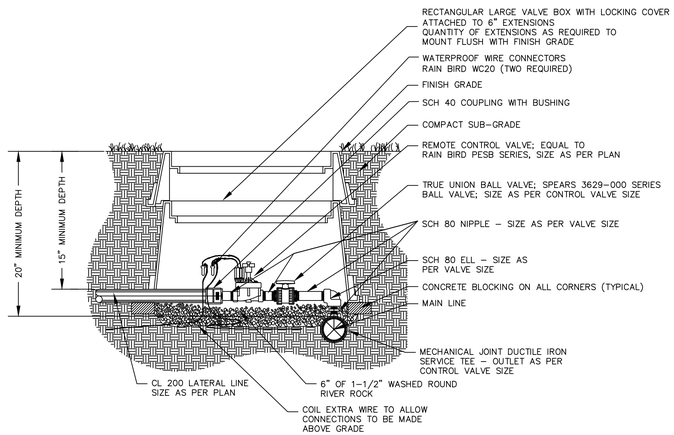

5 CONTROL VALVE ASSEMBLY -TYPICAL SECTION
NOT TO SCALE

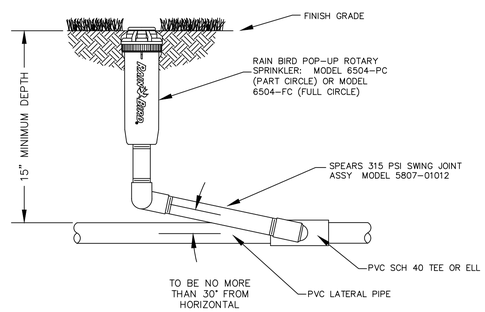

6 1" INLET GEARED ROTARY- TYPICAL SECTION
NOT TO SCALE

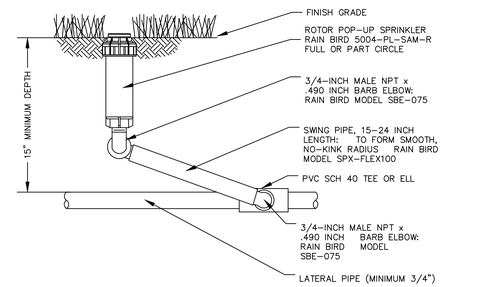

7 3/4" INLET GEARED ROTARY- TYPICAL SECTION
NOT TO SCALE

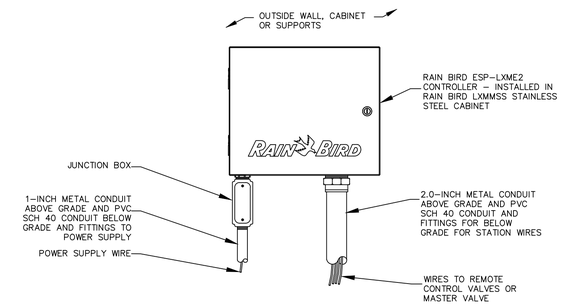

NOTES:

1. ESP-LXME2 CONTROLLER IS AVAILABLE 12-STATION BASE MODEL. ADDITIONAL MODULES IN 8- AND 12-STATION VERSIONS MAY BE ADDED TO BRING THE CONTROLLER UP TO 48 STATIONS MAXIMUM.
2. FOR EASE OF INSTALLATION INTO A CONTROLLER WITH MORE THAN 24 STATIONS, INSTALL A JUNCTION BOX AT THE BASE OF CONTROLLER AND TRANSITION LARGER VALVE AND COMMON WIRES FROM FIELD TO 18 AWG MULTI CONDUCTOR WIRE TO BE USED IN CONTROLLER.
3. USE STEEL CONDUIT FOR ABOVE GRADE AND SCH 40 PVC CONDUIT FOR BELOW GRADE CONDITIONS.
4. PROVIDE PROPER GROUNDING COMPONENTS TO ACHIEVE GROUND RESISTANCE OF 10 OHMS OR LESS.

8 RAIN BIRD ESP-LXME2 CONTROLLER & ENCLOSURE ASSEMBLY - TYPICAL SECTION
NOT TO SCALE

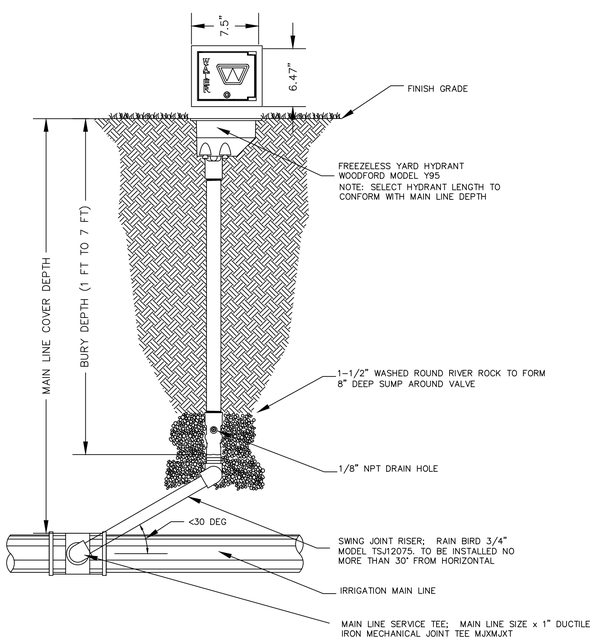

9 FREEZELESS YARD HYDRANT - TYPICAL SECTION
NOT TO SCALE

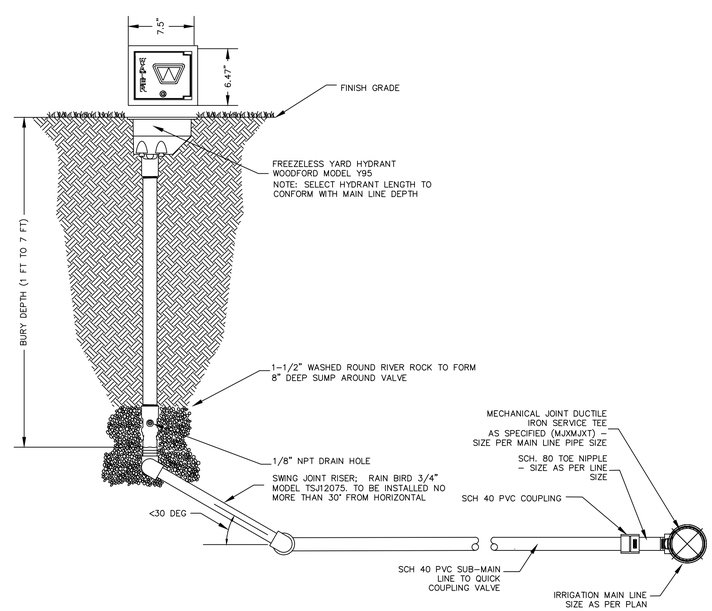

10 FREEZELESS YARD HYDRANT WITH MAIN LINE EXTENSION - TYPICAL SECTION
NOT TO SCALE

IRRIGATION INSTALLATION NOTES

1) THERE IS AN EXISTING IRRIGATION SYSTEM ON THIS PROJECT WHICH MUST BE PROTECTED AND MAINTAINED OPERATIONAL AT ALL TIMES DURING CONSTRUCTION ACTIVITIES. CONNECTION POINTS TO THE EXISTING IRRIGATION SYSTEM ARE SHOWN ON THE DRAWINGS. CONTRACTOR IS REQUIRED TO VISIT SITE PRIOR TO BIDDING TO BECOME AWARE OF SITE CONDITIONS. CONTRACTOR IS RESPONSIBLE FOR UNDERSTANDING WHAT UTILITIES ARE EXISTING AND HOW NEW IRRIGATION PIPE AND CONTROL WIRES ARE TO BE INSTALLED. ALL DAMAGES TO THE EXISTING UTILITIES AND IRRIGATION SYSTEM BY THE CONTRACTOR SHALL BE CORRECTED AT NO COST TO THE OWNER AND SAID REPAIRS SHALL RECEIVE THE APPROVAL OF OWNER PRIOR TO ACCEPTANCE OF THE SYSTEM.

2) PRIOR TO EXCAVATION, CONTRACTOR SHALL VERIFY UTILITY LOCATIONS WITH TELEPHONE, GAS, CABLE TV, AND ELECTRIC COMPANIES. OWNER REPRESENTATIVE AND CONTRACTOR TO REVIEW SITE ELECTRICAL, SITE GRADING AND DRAINAGE, SITE IRRIGATION AND ALL OTHER DRAWINGS PERTAINING TO UNDERGROUND UTILITY LOCATIONS.

3) THE IRRIGATION DESIGN IS DIAGRAMMATIC. THE INTENT OF THE DRAWINGS IS TO SHOW THE GENERAL LAYOUT AND LOGIC OF THE SYSTEM. SCALED MEASUREMENTS MAY NOT BE ACCURATE. ACTUAL LOCATIONS AND QUANTITIES OF PIPE AND FITTINGS MAY VARY DUE TO ACTUAL INSTALLATION CONDITIONS. CONTRACTOR SHALL REFER TO LANDSCAPE DRAWINGS FOR SPECIFIC PLANTING PLANS AND LOCATIONS. ALTHOUGH IRRIGATION PIPE MAY BE SHOWN INSIDE EXISTING TREE DRIP/CANOPY AREA FOR CONVENIENCE AND CLARITY, CONTRACTOR SHALL ROUTE LINES OUTSIDE OF CANOPY OF EXISTING TREES. WHEN OBSTRUCTIONS (TREES, SHRUBS, HYDRANTS, LIGHTS, ETC.)INTERFERE WITH SPRAY PATTERN OF SPRINKLER HEADS SO AS TO PREVENT PROPER COVERAGE, ADJUST SPRINKLER SYSTEM BY INSTALLING ADJUSTABLE PATTERN SPRINKLER HEADS ON EACH SIDE OF THE OBSTRUCTION SO AS TO PROVIDE PROPER COVERAGE. CONTRACTOR SHALL PERFORM ALL ADJUSTMENTS AT NO ADDITIONAL COST TO OWNER.

4) IRRIGATION INSTALLATION SHALL BE COORDINATED WITH EXCAVATION, GRADING, BUILDING, PAVING AND PLANTING OPERATIONS.

5) CONTRACTOR IS RESPONSIBLE FOR THE LOCATION AND PLACEMENT OF ALL SLEEVES ON THE PROJECT WHETHER SHOWN ON THE DRAWINGS OR NOT. SLEEVES NOT SHOWN ON THE DRAWINGS SHALL BE SIZED TWO (2) TIMES THE NOMINAL DIAMETER OF THE LARGEST PIPE PASSING THROUGH THE SLEEVE. MINIMUM SLEEVE SIZE SHALL BE 4" FOR 2" AND SMALLER LATERAL LINES PASSING UNDER PAVEMENT. A SEPARATE MINIMUM 2" DIAMETER SLEEVE SHALL BE PROVIDED FOR THE CONTROL WIRES TO PASS THROUGH AT EACH CROSSING. SLEEVES SHALL BE INSTALLED AT A MINIMUM COVER DEPTH OF TWENTY (20) INCHES FROM FINISH GRADE. COORDINATE HORIZONTAL AND VERTICAL ELEVATIONS WITH UTILITIES AND FOOTINGS. CONTRACTOR SHALL RECEIVE OWNER REPRESENTATIVE'S APPROVAL FOR ALL REQUIRED BORES UNDER ROADS, PATHS AND SIDEWALKS.

6) CONTRACTOR SHALL FOLLOW DRAWINGS, SPECIFICATIONS AND SPECIFIC MANUFACTURERS RECOMMENDATIONS TO ENSURE PROPER INSTALLATION OF THE IRRIGATION SYSTEM. CONTRACTOR SHALL NOTIFY OWNER REPRESENTATIVE IN WRITING WHENEVER THERE APPEARS TO BE A CONFLICT BETWEEN ANY OF THE ABOVE STATED DOCUMENTS. CONTRACTOR SHALL NOT WILLFULLY INSTALL THE IRRIGATION SYSTEM AS INDICATED ON THE DRAWINGS WHEN IT OBVIOUS IN THE FIELD THAT OBSTRUCTIONS, GRADE DIFFERENCES OR AREA DIMENSIONS EXIST THAT MIGHT NOT HAVE BEEN CONSIDERED DURING DESIGN. CONTRACTOR SHALL BRING SUCH OBSTRUCTIONS OR DIFFERENCES TO THE ATTENTION OF OWNER'S REPRESENTATIVE. IN THE EVENT THIS NOTIFICATION IS NOT PERFORMED, CONTRACTOR ASSUMES RESPONSIBILITY FOR ALL REQUIRED REVISIONS.

7) IRRIGATION 24 VOLT COMMON WIRE SHALL BE 14 GAUGE UF AND CONTROL WIRE SHALL BE 14 GAUGE UF. WATERPROOF CONNECTORS, RATED FOR 600 VOLTS, SHALL BE USED ON ALL SPLICES AND CONNECTIONS.

8) CONTROLLER SHALL BE WALL MOUNTED AT THE LOCATION SHOWN. CONTRACTOR SHALL RECEIVE OWNER REPRESENTATIVE'S APPROVAL FOR SPECIFIC PLACEMENT PRIOR TO INSTALLATION. OWNER SHALL BE RESPONSIBLE FOR PROVIDING 120 VOLT POWER TO A DISCONNECT POINT ADJACENT TO THE CONTROLLER. CONTRACTOR SHALL BE RESPONSIBLE FOR CONNECTION OF 120 VOLT POWER TO CONTROLLER. CONTRACTOR TO PROVIDE 2" SCHEDULE 40 PVC CONDUIT FOR IRRIGATION CABLE FOR BELOW GROUND APPLICATIONS AND 2" METAL CONDUIT FOR ABOVE GROUND APPLICATIONS AND ATTACHMENT TO THE IRRIGATION CONTROLLER.

9) ROTARY SPRINKLER HEADS WITH CHECK VALVES SHALL BE REQUIRED TO PREVENT LOW HEAD DRAINAGE. CONTRACTOR SHALL INSTALL ADDITIONAL IN-LINE PIPE CHECK VALVES AS REQUIRED WHEN HEAD OF WATER IN UPSTREAM PIPE EXCEEDS THE CAPACITY OF DOWNSTREAM SPRINKLER HEAD CHECK VALVES.

10) ALL ROTARY HEADS SHALL BE INSTALLED PERPENDICULAR (90 DEGREES) TO FINISHED GRADE. ADJUST ALL HEADS TO MINIMIZE OVER SPRAY ONTO HARDSCAPE AND BUILDINGS.

BEFORE YOU DIG... CALL OKIE 1-800-522-6543

PDG
PLANNING DESIGN GROUP
LANDSCAPE ARCHITECTURE • RECREATIONAL DESIGN • LAND PLANNING
5314 S. YALE AVE., SUITE 710, TULSA, OK 74135
918.628.1255 918.628.1256 FAX
WWW.PLANNINGDESIGNGROUP.COM

MOORE ENGINEERING, INC.
Irrigation & Drainage Design • Pumping Systems
P.O. Box 514 - Stillwater, OK 74076
james@prairieglendesigns.com

REGISTERED PROFESSIONAL ENGINEER
JAMES EDWIN MOORE
11869
OKLAHOMA
DATE SIGNED 06-03-22
Moore Engineering, Inc. CA 1186
P.O. Box 514
Stillwater, OK 74076

PROJECT INFORMATION

PROJECT ADDRESS:

1001 E. ROBINSON ST.,
NORMAN, OKLAHOMA 73071

PROJECT NO.	NA
DATE	06/03/22
DRAWN BY	CHECKED BY
JM	JM

GRIFFIN SOCCER COMPLEX
PHASE 6
NORMAN, OKLAHOMA

ISSUE/ REVISIONS

06/03/22	BID SET

OWNER:

THE CITY OF NORMAN PARKS & RECREATION
201-C WEST GRAY
NORMAN, OK 73069
(405) 366-5472

IR-7

IRRIGATION DETAILS

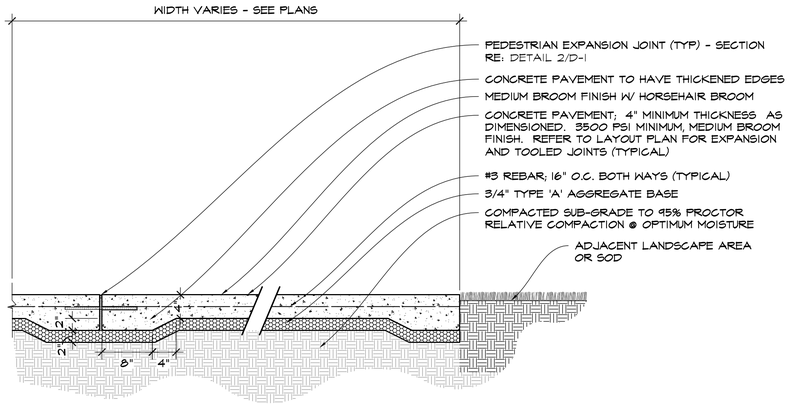

1 PEDESTRIAN CONCRETE PAVING - SECTION

1" = 1'-0" P-2021-W00-PAV-04

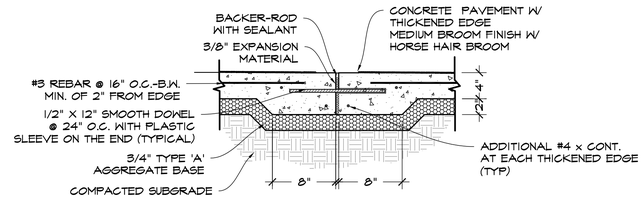

2 PEDESTRIAN EXPANSION JOINT (TYP) - SECTION

1" = 1'-0" P-2021-W00-PAV-79

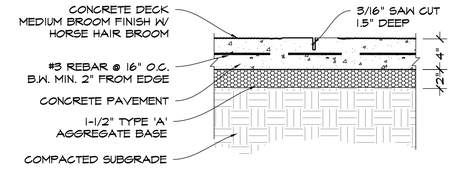

3 CONCRETE SAW CUT JOINT - SECTION

1" = 1'-0" P-2021-W00-PAV-03

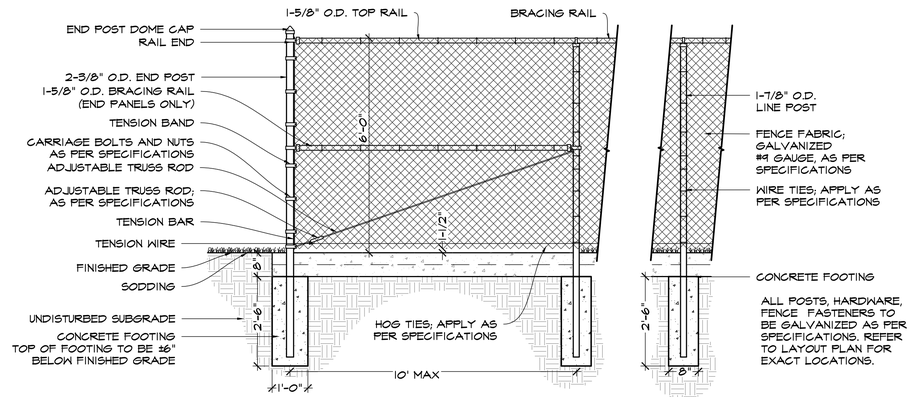

4 6' HT. CHAIN LINK FENCE (BLACK VINYL COATED) - SECTION

1/2" = 1'-0" P-2021-W00-FEN-55

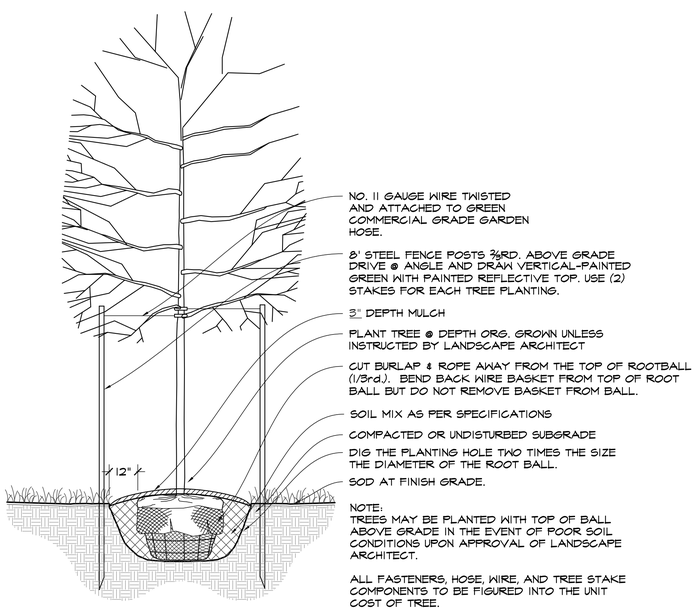

5 DECIDUOUS TREE PLANTING IN GRASS - TYPICAL SECTION

NOT TO SCALE

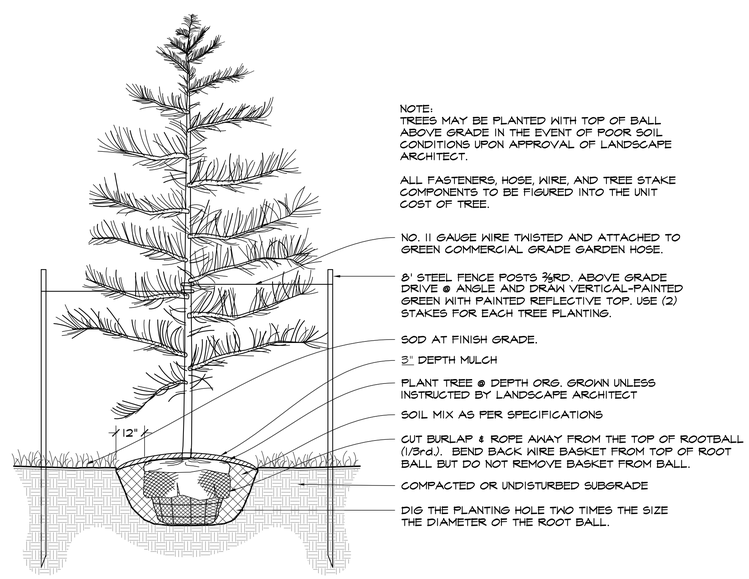

6 EVERGREEN TREE PLANTING IN GRASS - TYPICAL SECTION

NOT TO SCALE

DETAIL NOTES

1. FINISHED GRADE TO BE A MINIMUM OF 6" ABOVE TOP OF ANY FOOTING.
2. WRITTEN DIMENSIONS HAVE PRIORITY OVER SCALED DIMENSIONS.
3. ALL VERTICAL DIMENSIONS ARE TAKEN FROM THE TOP OF FOOTING.
4. REFER TO SPECIFICATIONS AND MANUFACTURER'S RECOMMENDATIONS FOR ANY ADDITIONAL INFORMATION.
5. ALL CONSTRUCTION TO BE IN STRICT ACCORDANCE WITH CURRENT CITY OF NORMAN SPECIFICATIONS AND STANDARDS.

PDG
PLANNING DESIGN GROUP
LANDSCAPE ARCHITECTURE • RECREATIONAL DESIGN • LAND PLANNING
5314 S. YALE AVE., SUITE 710, TULSA, OK 74135
918.628.1255 918.628.1256 FAX
WWW.PLANNINGDESIGNGROUP.COM

REGISTERED LANDSCAPE ARCHITECT
JAMES C. CROSBY
1 2 1
OKLAHOMA

JAMES C. CROSBY, ASLA
LANDSCAPE ARCHITECT OF RECORD

PROJECT INFORMATION

PROJECT ADDRESS:

1001 E. ROBINSON ST.,
NORMAN, OKLAHOMA 73071

PROJECT NO.	NA
DATE	04/29/22
DRAWN BY	CHECKED BY
AB	GE

GRIFFIN SOCCER COMPLEX
PHASE 6
NORMAN, OKLAHOMA

ISSUE/ REVISIONS

06/03/22	BID SET

OWNER:

THE CITY OF NORMAN PARKS & RECREATION
201-C WEST GRAY
NORMAN, OK 73069
(405) 366-5472

D-1

CONSTRUCTION DETAILS

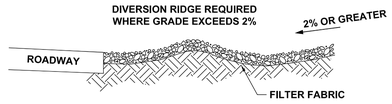

SECTION A -- A

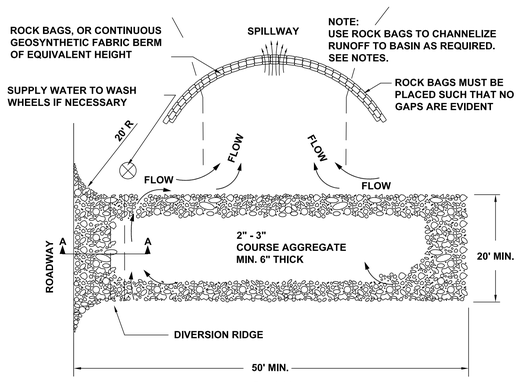

PLAN

NOTES:

1. THE ENTRANCE SHALL BE MAINTAINED IN A CONDITION THAT WILL PREVENT TRACKING OR FLOWING OF SEDIMENT ONTO PUBLIC RIGHT-OF-WAYS. THIS MAY REQUIRE TOP DRESSING, REPAIR AND/OR CLEANOUT OF ANY MEASURES USED TO TRAP SEDIMENT.
2. WHEN NECESSARY, WHEELS SHALL BE CLEANED PRIOR TO ENTRANCE ONTO PUBLIC RIGHT-OF-WAY.
3. WHEN WASHING IS REQUIRED, IT SHALL BE DONE ON AN AREA STABILIZED WITH CRUSHED STONE THAT DRAINS INTO AN APPROVED SEDIMENT TRAP OR SEDIMENT BASIN.
4. ROCK BAGS OR SANDBAGS SHALL BE PLACED SUCH THAT NO GAPS ARE EVIDENT. SEE NOTES ERO-03.

1 TEMPORARY GRAVEL CONSTRUCTION ENTRANCE/EXIT

SCALE: NTS

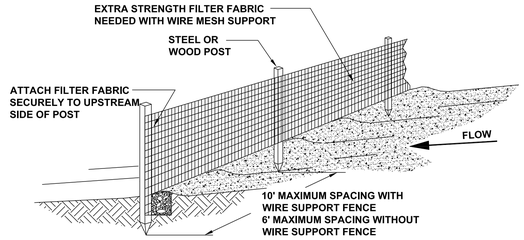

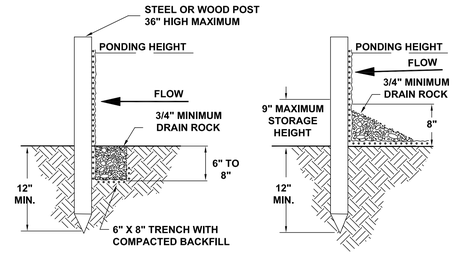

TRENCH DETAIL

INSTALLATION WITHOUT TRENCHING

NOTES:

1. MUST BE INSTALLED PROPERLY TO AVOID NOTICE OF VIOLATION.
2. SILT FENCE SHALL BE PLACED ON SLOPE CONTOURS TO MAXIMIZE POUNDING EFFICIENCY.
3. INSPECT AND REPAIR FENCE AFTER EACH STORM EVENT AND REMOVE SEDIMENT WHEN NECESSARY. 9" MAXIMUM RECOMMENDED STORAGE HEIGHT.
4. REMOVED SEDIMENT SHALL BE DEPOSITED TO AN AREA THAT WILL NOT CONTRIBUTE TO SEDIMENT OFF-SITE AND CAN BE PERMANENTLY STABILIZED.

2 FILTER FABRIC SILT FENCE

SCALE: NTS

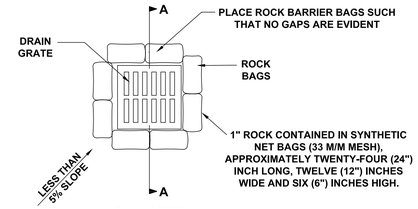

PLAN VIEW

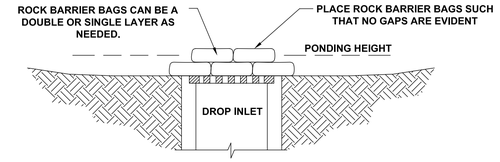

SECTION A-A

NOTES:

1. DROP INLET SEDIMENT BARRIERS ARE TO BE USED FOR SMALL, NEARLY LEVEL DRAINAGE AREAS. (LESS THAN 5%.)
2. A "REASONABLE" DESIGN SIZE PARTICLE TO CAPTURE MUST BE SELECTED.
3. SIZE DISTRIBUTION OF UPSTREAM SOIL PARTICLES MUST BE EVALUATED.
4. INFLOW AND OUTFLOW FROM THE SYSTEM FOR A SPECIFIC FREQUENCY STORM MUST BE KNOWN.
5. POND VOLUME IS DIRECTLY PROPORTIONAL TO THE DISCHARGE RATE OF WATER FROM THE SYSTEM.
6. POND VOLUME IS INVERSELY PROPORTIONAL TO THE MASS OF THE DESIGN SIZE SUSPENDED PARTICLE.
7. A SYSTEM MUST PROVIDE SUFFICIENT FLOW TO ALLOW FOR DEPOSITION OF DESIGN SIZE PARTICLES.
8. THE PONDING HEIGHT MUST BE WELL BELOW THE GROUND ELEVATION DOWNSLOPE TO PREVENT RUNNOFF FROM BYPASSING THE INLET. A TEMPORARY DIKE MAY BE NECESSARY ON THE DOWNSLOPE SIDE OF THE STRUCTURE.

3 ROCK BAG INLET SEDIMENT BAG

SCALE: NTS

Temporary Erosion Control

SMALL GRAINS SUCH AS OATS, RYE, WHEAT, SUDANS AND SORGHUMS ARE THE MOST FEASIBLE TEMPORARY VEGETATION TO CONTROL EROSION. THE PRACTICE IS EFFECTIVE FOR AREAS WHERE THE SOIL IS LEFT EXPOSED FOR A PERIOD OF 6 TO 12 MONTHS. THE TIME PERIOD MAY BE SHORTER DURING PERIODS OF EROSIVE RAINFALL.

1. PRIOR TO SEEDING, NEEDED EROSION CONTROL PRACTICES SUCH AS DIVERSIONS, GRADE STABILIZATION STRUCTURES, BERMS, DIKES, ETC., SHALL BE INSTALLED.
2. TEMPORARY VEGETATIVE PRACTICES SHALL CONFORM TO BEST MANAGEMENT PRACTICES FOR CONSTRUCTION SITES AS ESTABLISHED BY EPA.
3. IF THE AREA TO BE SEEDED HAS BEEN RECENTLY LOOSENED TO THE EXTENT THAT AN ADEQUATE SEEDBED EXISTS, NO ADDITIONAL TREATMENT IS REQUIRED. HOWEVER IF THE AREA TO BE SEEDED IS PACKED, CRUSTED, AND/OR HARD, THE TOP LAYER OF SOIL SHALL BE LOOSENED BY DISCING OR OTHER SUITABLE MEANS.
4. FERTILIZER SHALL BE APPLIED AT A RATE OF 600 POUNDS PER ACRE OR 15 POUNDS PER 1000 SQUARE FOOT USING 10-20-10 OR EQUAL.
5. SOILS KNOWN TO BE HIGHLY ACIDIC SHALL BE LIME TREATED.
6. SEEDING OPTIONS ARE AS FOLLOWS:

PLANT	QUANTITY PER ACRE	QUANTITY PER 1000 S.F.	PLANTING DATE	DEPTH
ANNUAL	40 LBS	0.90 LBS	09/15 TO 11/30	1/4 IN.
ELBON RYE	2 BU.	3.00 LBS	08/15 TO 11/30	2 IN.
WHEAT	2 BU.	3.00 LBS	08/15 TO 11/30	2 IN.
OATS	3 BU.	2.50 LBS	08/15 TO 11/30	2 IN.
SORGHUM	60 LBS	1.40 LBS	03/01 TO 09/15	2 IN.
SUDAN	40 LBS	0.90 LBS	04/01 TO 09/15	2 IN.

7. SEEDS SHALL BE DRILLED UNIFORMLY.
8. SEEDING IMPLEMENTS SHOULD BE USED AT RIGHT ANGLES TO THE GENERAL SLOPE TO MINIMIZE EROSION.
9. 1 TO 3 MONTHS AFTER PLANTING, THE SEEDED SITE SHALL BE TOP DRESSED WITH 8 POUNDS PER 1000 SQUARE FEET OR 350 POUNDS PER ACRE OF 33-0-0.
10. AREAS WHICH DO NOT DEVELOP A SUFFICIENT COVER SHALL BE REPLANTED.
11. THE SEEDED AREA SHALL BE WATERED WHEN FEASIBLE AND NEEDED.

Permanent Erosion Control

BERMUDA GRASS, KENTUCKY 31, TALL FESCUE AND WEEPING LOVEGRASS ARE SOME OF THE TYPES OF PERMANENT VEGETATION THAT MAY BE EFFECTIVELY USED TO CONTROL EROSION.

1. PRIOR TO SEEDING, NEEDED EROSION CONTROL PRACTICES SUCH AS DIVERSIONS, GRADE STABILIZATION STRUCTURES, BERMS, DIKES, ETC., SHALL BE INSTALLED.
2. THE SURFACE SHALL BE LOOSENED EVENLY TO A DEPTH OF 2 TO 3 INCHES AND 10-20-10 FERTILIZER (10 POUNDS PER 1000 SQUARE FOOT OR 450 POUNDS PER ACRE) SHALL BE MIXED WITH THE LOOSENED SURFACE SOIL BY DISCING OR OTHER SUITABLE MEANS.
3. SOILS KNOWN TO BE HIGHLY ACIDIC SHALL BE LIME TREATED.
4. SEEDING OPTIONS ARE AS FOLLOWS:

PLANT	QUANTITY PER ACRE	QUANTITY PER 1000 S.F.	PLANTING DATE	DEPTH
BERMUDA	10 LBS	0.25 LBS	04/01 TO 08/15	1/2 IN.
FESCUE	40 LBS	0.90 LBS	09/01 TO 11/01	1/2 IN.
LOVEGRASS	40 LBS	0.90 LBS	04/01 TO 06/30	1/2 IN.

5. SEEDS SHALL BE DRILLED UNIFORMLY.
6. SEEDING IMPLEMENTS SHOULD BE USED AT RIGHT ANGLES TO THE GENERAL SLOPE TO MINIMIZE EROSION.
7. MULCH SHALL BE USED WHERE NEEDED.
8. THE AREA SHALL BE WATERED DAILY OR AS OFTEN AS NECESSARY TO MAINTAIN ADEQUATE SOIL MOISTURE UNTIL THE PLANTS GROW 1/2 TO 1 INCH.

PDG
PLANNING DESIGN GROUP
LANDSCAPE ARCHITECTURE • RECREATIONAL DESIGN • LAND PLANNING
5314 S. YALE AVE., SUITE 710, TULSA, OK 74135
918.628.1255 918.628.1256 FAX
WWW.PLANNINGDESIGNGROUP.COM

REGISTERED LANDSCAPE ARCHITECT
JAMES C. CROSBY
1 2 1
OKLAHOMA
6-3-22

JAMES C. CROSBY, ASLA
LANDSCAPE ARCHITECT OF RECORD

PROJECT INFORMATION

PROJECT ADDRESS:

1001 E. ROBINSON ST.,
NORMAN, OKLAHOMA 73071

PROJECT NO.	NA
DATE	04/29/22
DRAWN BY	CHECKED BY
AB	GE

GRIFFIN SOCCER COMPLEX
PHASE 6
NORMAN, OKLAHOMA

ISSUE/ REVISIONS

06/03/22	BID SET

OWNER:

THE CITY OF NORMAN
PARKS & RECREATION
201-C WEST GRAY
NORMAN, OK 73069
(405) 366-5472

D-2

EROSION CONTROL DETAILS