PIPE INSIDE DIAMETER		STANDARD TRENCH WIDTH	
MM	IN.	MM	IN.
150	6	450	18
200	8	600	24
250	10	750	30
300	12	750	30
375	15	900	36
450	18	900	36
525	21	1,050	42
600	24	1,050	42
675	27	1,200	48
750	30	1,200	48
900	36	1,350	54
1,050	42	1,500	60
1,200	48	1,650	66

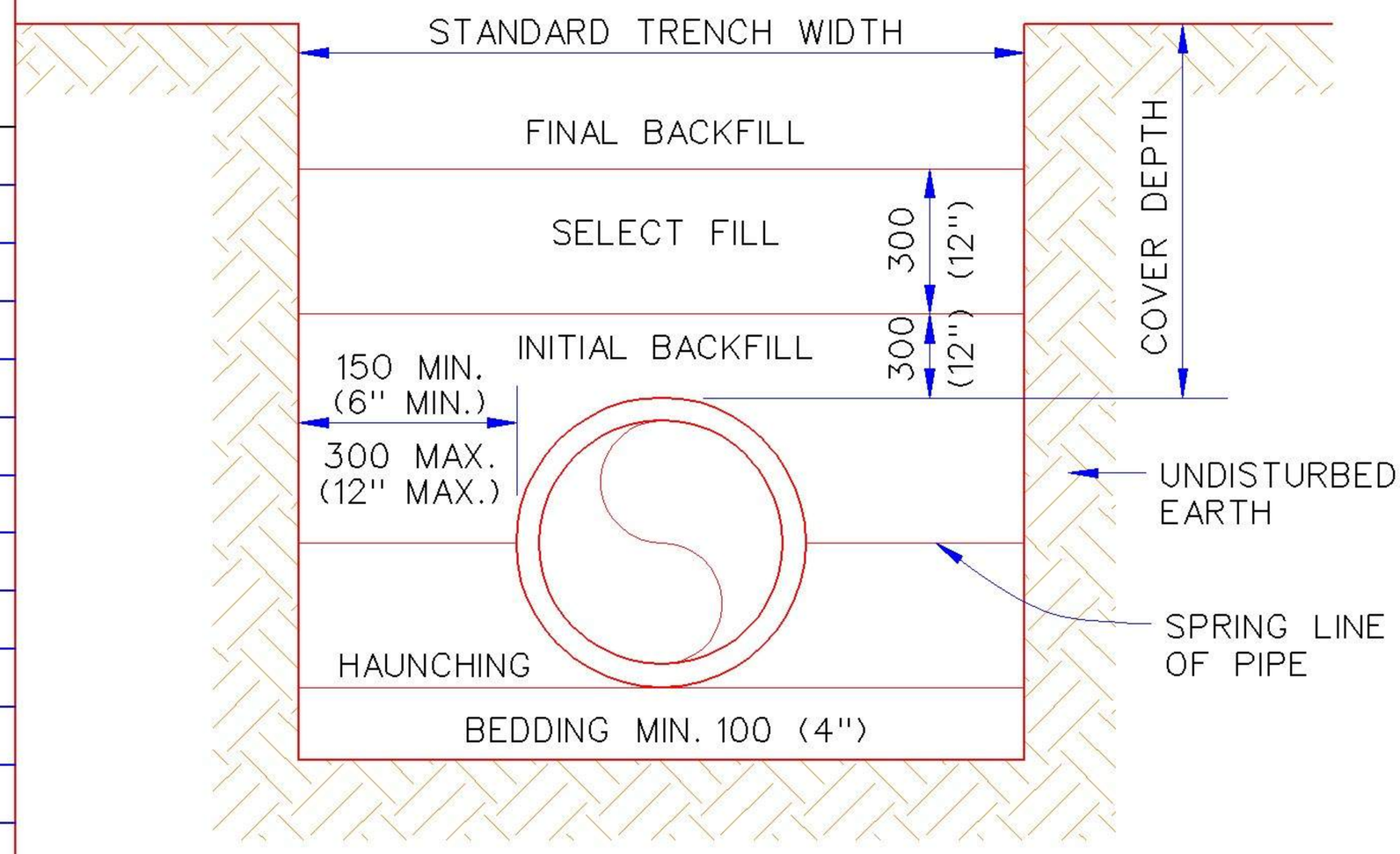

BEDDING MATERIALS

BACKFILL DESCRIPTION	NON-PAVED AREAS			PAVED AREAS (See Note 8)		
	P V C	DUCTILE IRON	H D P E	P V C	DUCTILE IRON	H D P E
FINAL BACKFILL	EXCAVATED MATERIAL	EXCAVATED MATERIAL	EXCAVATED MATERIAL	SBM	SBM	SBM
SELECT BACKFILL	SELECT FILL	SELECT FILL	SELECT FILL	SBM	SBM	SBM
INITIAL BACKFILL	COVER ≤10'-SAND OR SBM >10'-SBM	SELECT FILL	COVER ≤10'-SAND OR SBM >10'-SBM	SBM	SBM	SBM
HAUNCHING	COVER ≤10'-SAND OR SBM >10'-SBM	SELECT FILL	COVER ≤10'-SAND OR SBM >10'-SBM	SBM	SBM	SBM
BEDDING	See Note 5	See Note 5	See Note 5	See Note 5	See Note 5	See Note 5

NOTES:

1. INSTALLATION AND BACK FILLING SHALL MEET MANUFACTURERS RECOMMENDATIONS.
2. SELECT FILL CONSISTS OF EXCAVATED MATERIALS CONTAINING NO ROCKS LARGER THAN 50 MM (2").
3. STANDARD BEDDING MATERIAL (SBM) SHALL CONFORM TO ODOT 703.01, TYPE A AGGREGATE BASE OR FLOWABLE FILL PER SECTION 501.02(B).
4. COMPACTION REQUIREMENTS:
   a. NON-PAVED AREAS: 90% MAXIMUM STANDARD PROCTOR DENSITY FOR COHESIONLESS SOILS AND 85% FOR COHESIVE SOILS.
   b. PAVED AREAS: 95% MAXIMUM STANDARD PROCTOR DENSITY FOR COHESIONLESS SOILS.
5. IF TRENCH IS DRY BEDDING SHALL BE 100 MM (4") SAND OR TYPE A AGGREGATE BASE, AND IF WET SHALL BE NO. 57 OR NO. 67 ROCK PER SECTION 701.06(C).
6. IN SANDY SOIL, CONTRACTOR MAY BACKFILL WITH NATIVE MATERIAL AND USE WARNING TAPE 18" ABOVE PIPE.
7. NO WATER JETTING ALLOWED.
8 THE BACKFILL MATERIAL SHALL EXTEND A MINMUM OF 2-FEET BEHIND THE BACK OF CURB, OR THE EDGE OF PAVEMENT WHERE NO CURB EXISTS.

METRIC UNITS ARE IN MM WITH ENGLISH UNITS IN PARENTHESIS, UNLESS INDICATED OTHERWISE.

WATER PIPE TRENCHING AND BEDDING

City Engineer Approval:		CITY OF NORMAN, OKLAHOMA	
Approval Date:	Revision Date: 6-14-2001	Rev. No. 3	DRAWING NO. W 01

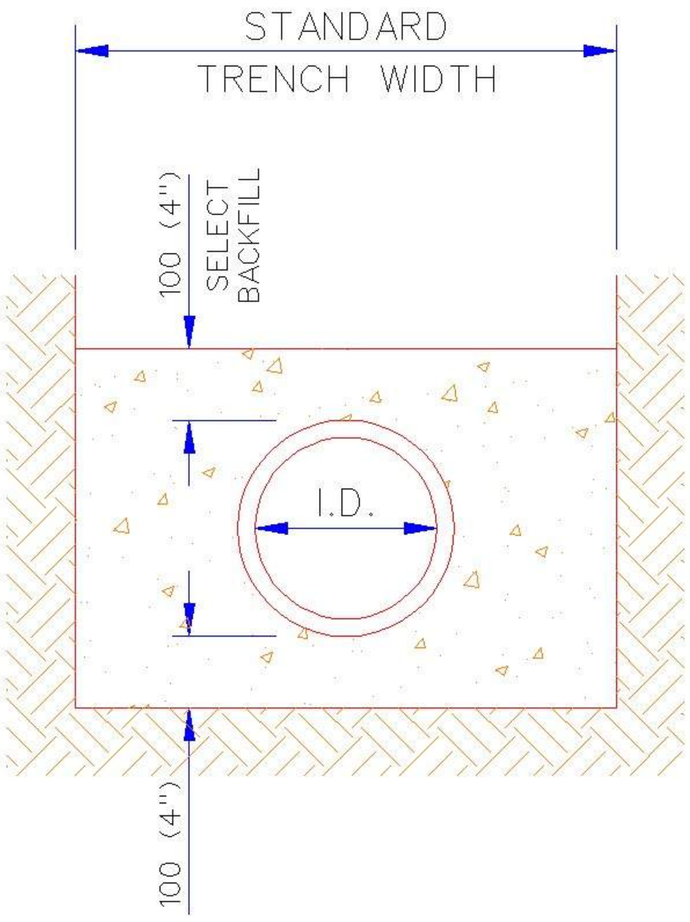

CONCRETE ENCASEMENT

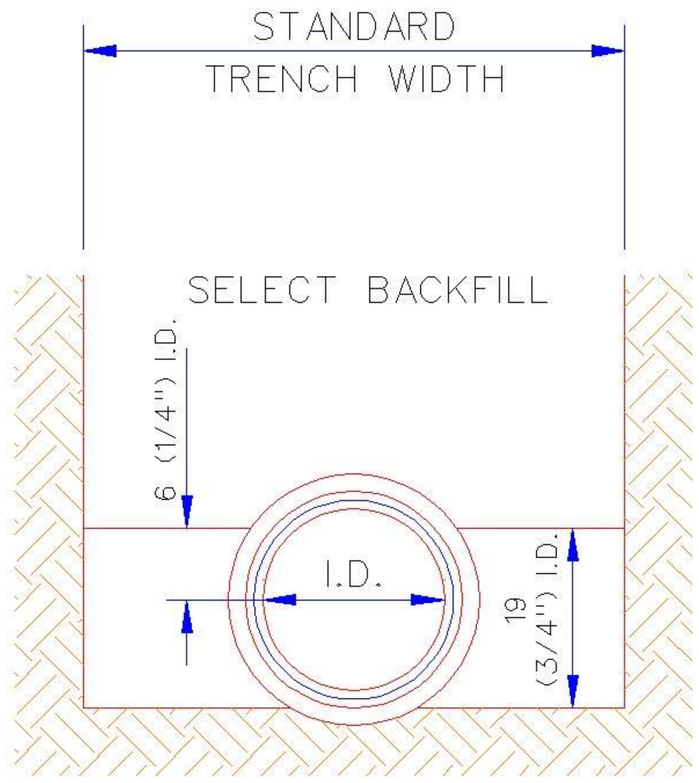

CONCRETE CRADLE

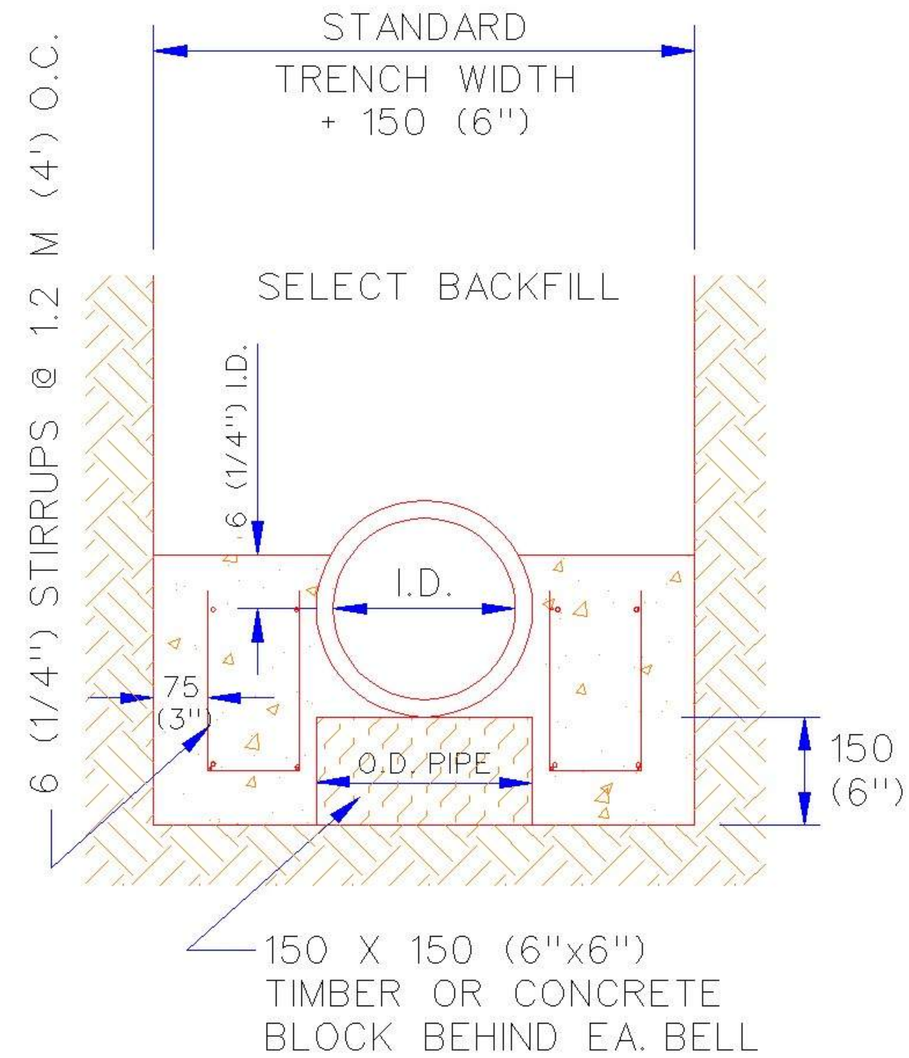

WATER TABLE CRADLE

PIPE INSIDE DIAMETER		STANDARD TRENCH WIDTH		CONCRETE ENCASEMENT VOLUME		CONCRETE CRADLE VOLUME		CONCRETE WATER TABLE CRADLE VOLUME	
MM	IN.	MM	IN.	CM/LM	CF/LF	CM/LM	CF/LF	CM/LM	CF/LF
100	4	450	18	0.13	1.41	0.03	0.30	0.13	1.43
150	6	450	18	0.14	1.55	0.04	0.40	0.14	1.59
200	8	600	24	0.21	2.32	0.06	0.72	0.20	2.22
250	10	750	30	0.29	3.20	0.10	1.12	0.26	2.94
300	12	750	30	0.30	3.38	0.11	1.24	0.28	3.12
375	15	900	36	0.41	4.52	0.16	1.83	0.36	4.04
450	18	900	36	0.43	4.73	0.18	1.95	0.38	4.27
525	21	1,050	42	0.54	6.05	0.24	2.66	0.48	5.32
600	24	1,050	42	0.56	6.19	0.25	2.72	0.49	5.47
675	27	1,200	48	0.69	7.69	0.32	3.55	0.60	6.65
750	30	1,200	48	0.70	7.76	0.32	3.55	0.61	6.74
900	36	1,350	54	0.85	9.43	0.40	4.44	0.73	8.06
1,050	42	1,500	60	1.01	11.21	0.48	5.39	0.85	9.45
1,200	48	1,650	66	1.18	13.10	0.58	6.39	0.98	10.89

METRIC UNITS ARE IN MM WITH ENGLISH UNITS IN PARENTHESIS, UNLESS INDICATED OTHERWISE.

CONCRETE ENCASEMENT & CRADLES

City Engineer Approval:		CITY OF NORMAN, OKLAHOMA	
Approval Date:	Revision Date:	Rev. No. 0	DRAWING NO. W 02

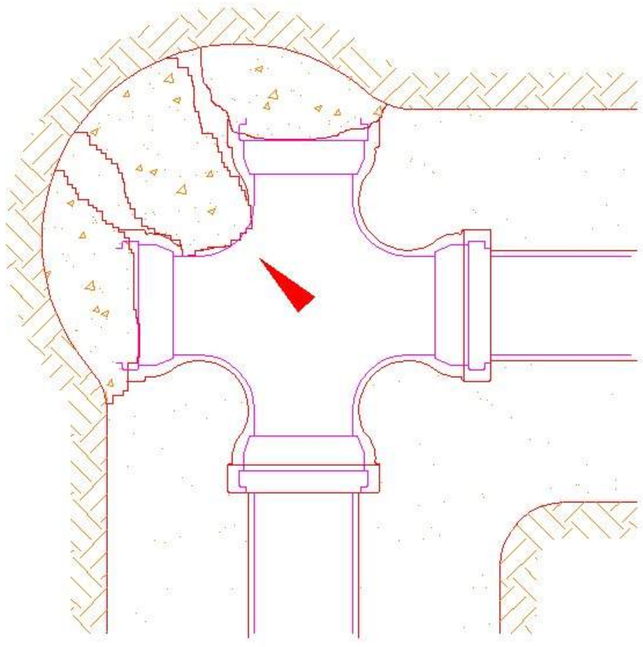

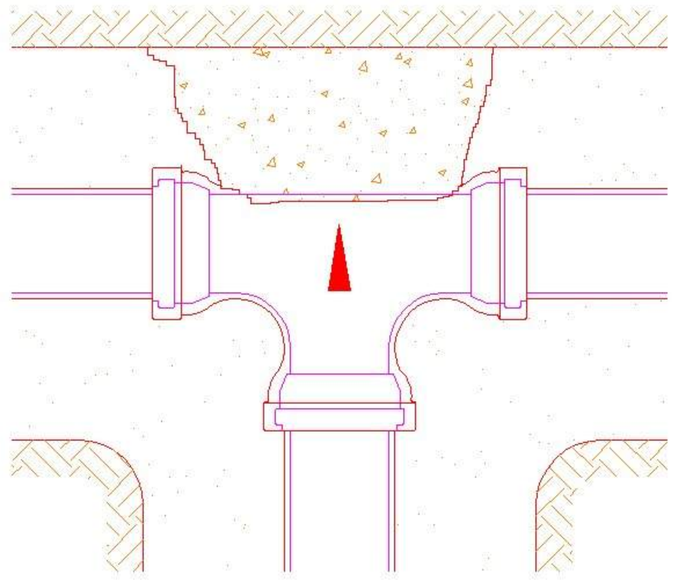

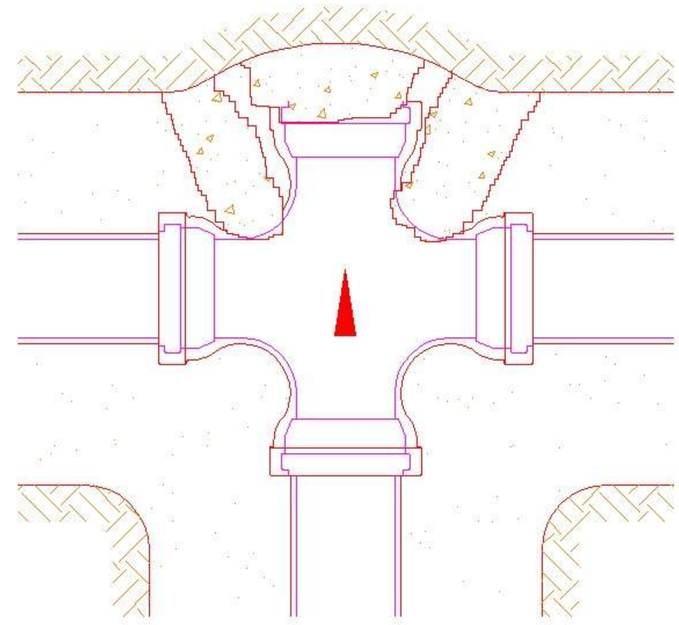

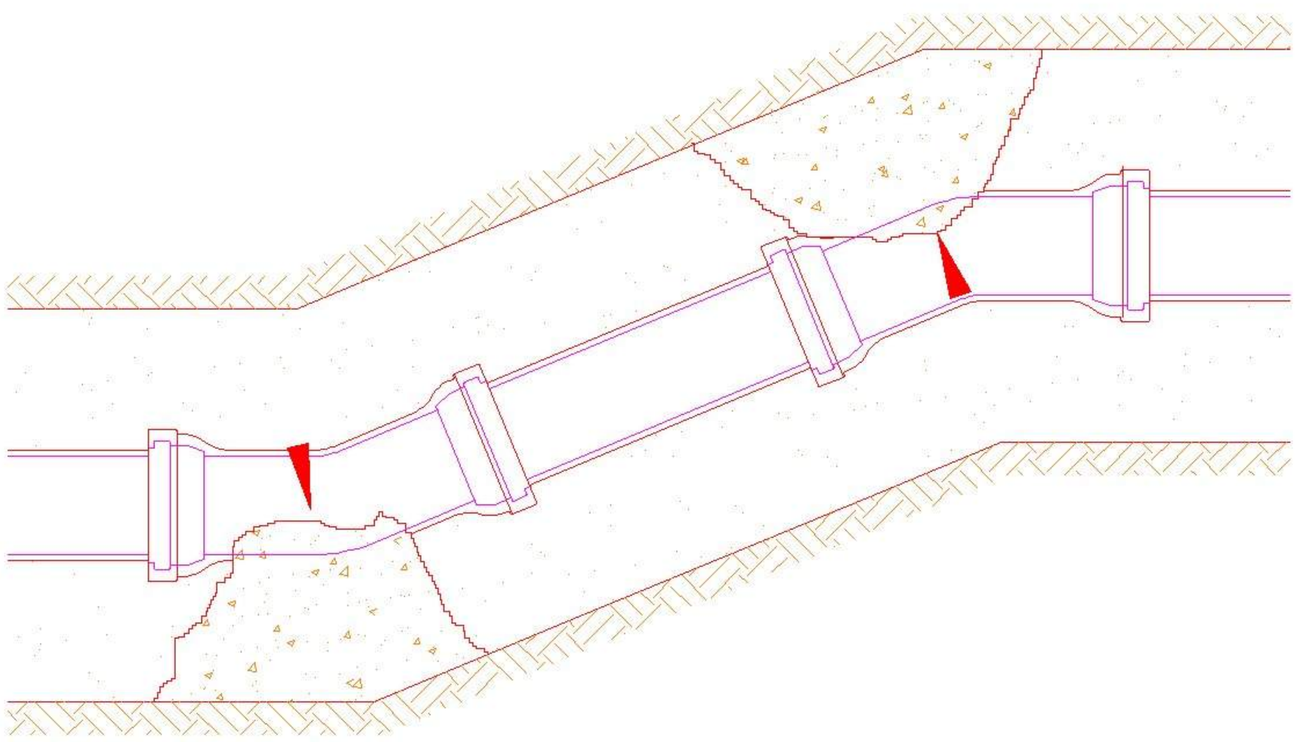

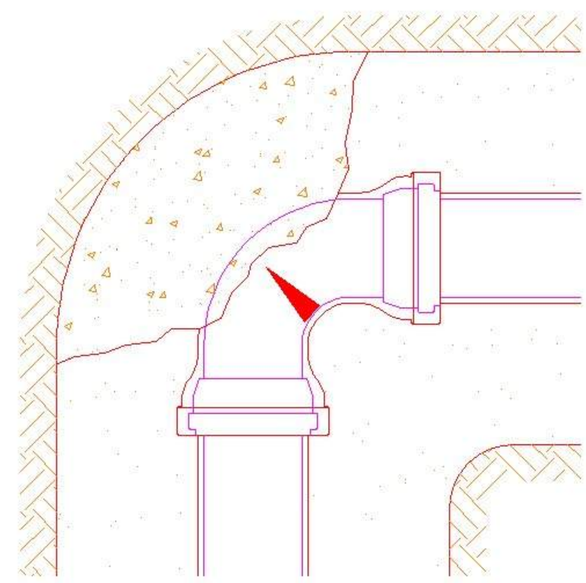

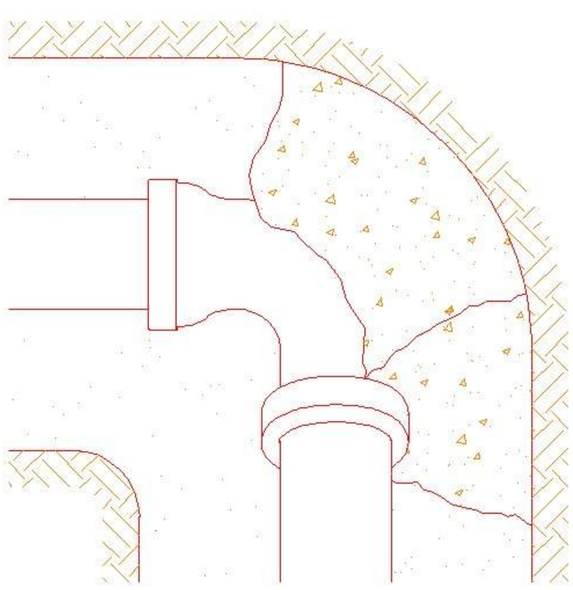

2" - 8" PIPE

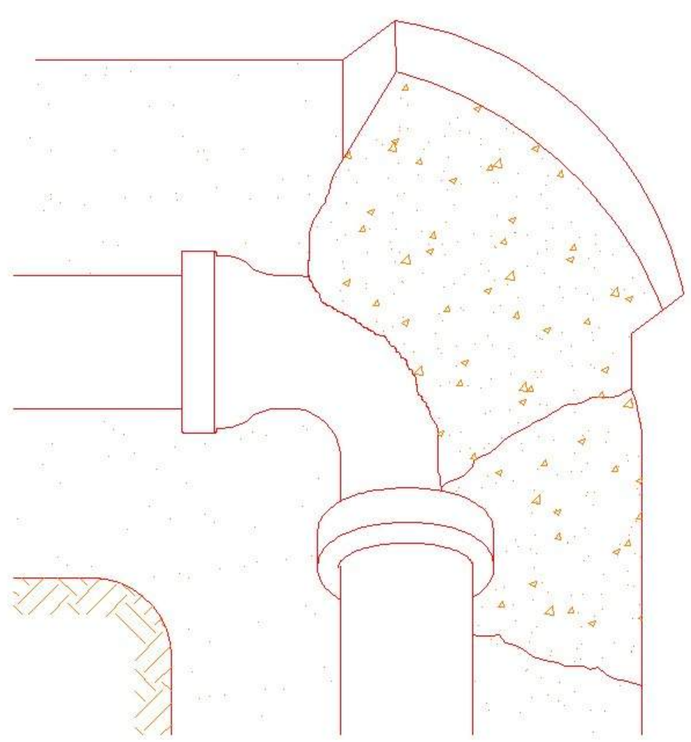

LARGER

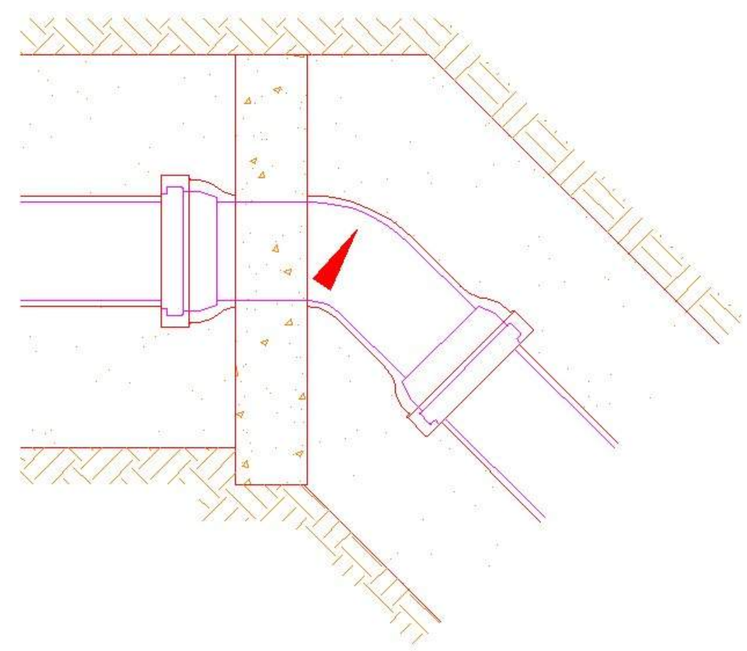

THRUST BLOCKS

City Engineer Approval:		CITY OF NORMAN, OKLAHOMA	
Approval Date:	Revision Date:	Rev. No. 0	DRAWING NO. W 03

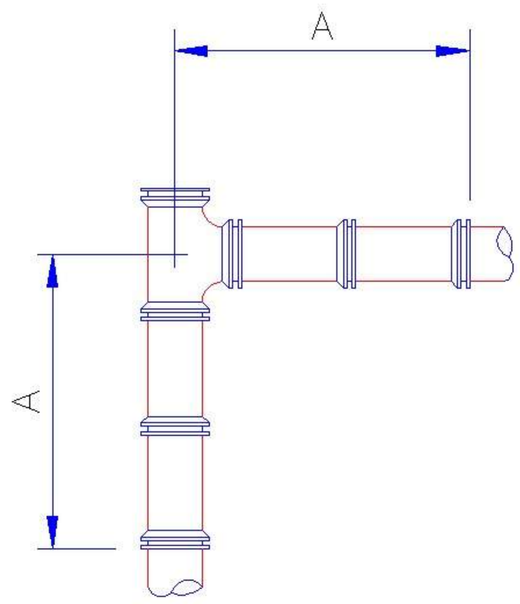

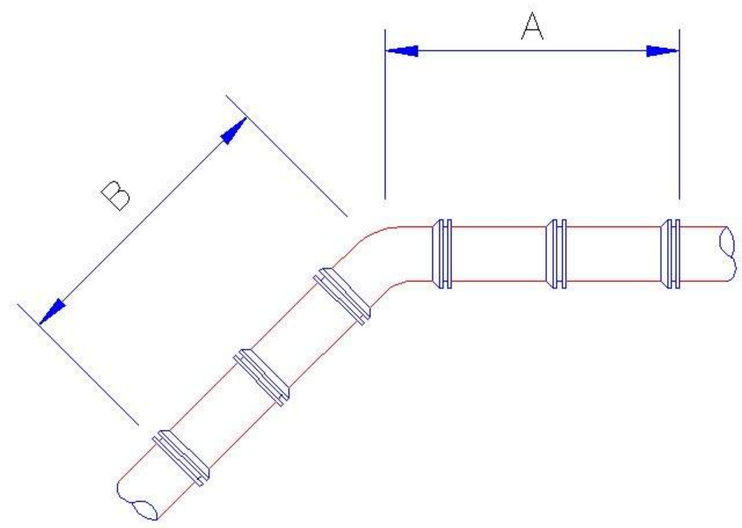

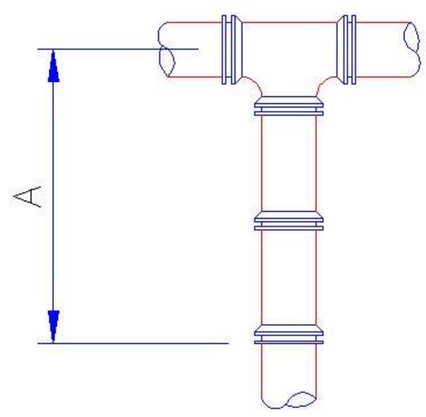

NOTE:

THE LENGTHS OF PIPE WITH RESTRAINED JOINTS ARE BASED ON A COMPACTED SILTY SOIL SURROUNDING THE PIPE

		A				B					
SIZE		TEE & PLUG		90° BEND		45° BEND		22-1/2° BEND		11-1/4° BEND	
MM	IN.	M	FT.	M	FT.	M	FT.	M	FT.	M	FT.
150	6	3.7	12	5.2	17	3	10	1.8	6	0.9	3
200	8	4.9	16	6.7	22	4	13	2.4	8	1.2	4
250	10	5.8	19	8.2	27	4.9	16	2.7	9	1.5	5
300	12	7.0	23	9.7	32	5.8	19	3.4	11	1.8	6
350	14	7.9	26	11	36	6.3	21	3.7	12	2.1	7
400	16	8.7	29	12.3	41	7.3	24	4.3	14	2.4	8
450	18	9.7	32	13.5	45	7.9	26	4.6	15	2.4	8
500	20	10.7	35	15	50	8.7	29	4.9	16	2.7	9
600	24	12.3	41	17.4	58	10.4	34	5.8	19	3	10
750	30	15	50	20	70	12	40	6.7	22	3.7	12
900	36	17.4	58	25.5	82	13.8	46	7.9	26	4.3	14
1050	42	19.2	66	28.3	93	15.6	52	8.7	29	4.6	15

(LENGTH REQUIRED FOR RESTRAINING JOINTS)

RESTRAINED JOINTS

City Engineer Approval:		CITY OF NORMAN, OKLAHOMA	
Approval Date:	Revision Date:	Rev. No. 0	DRAWING NO. W 04

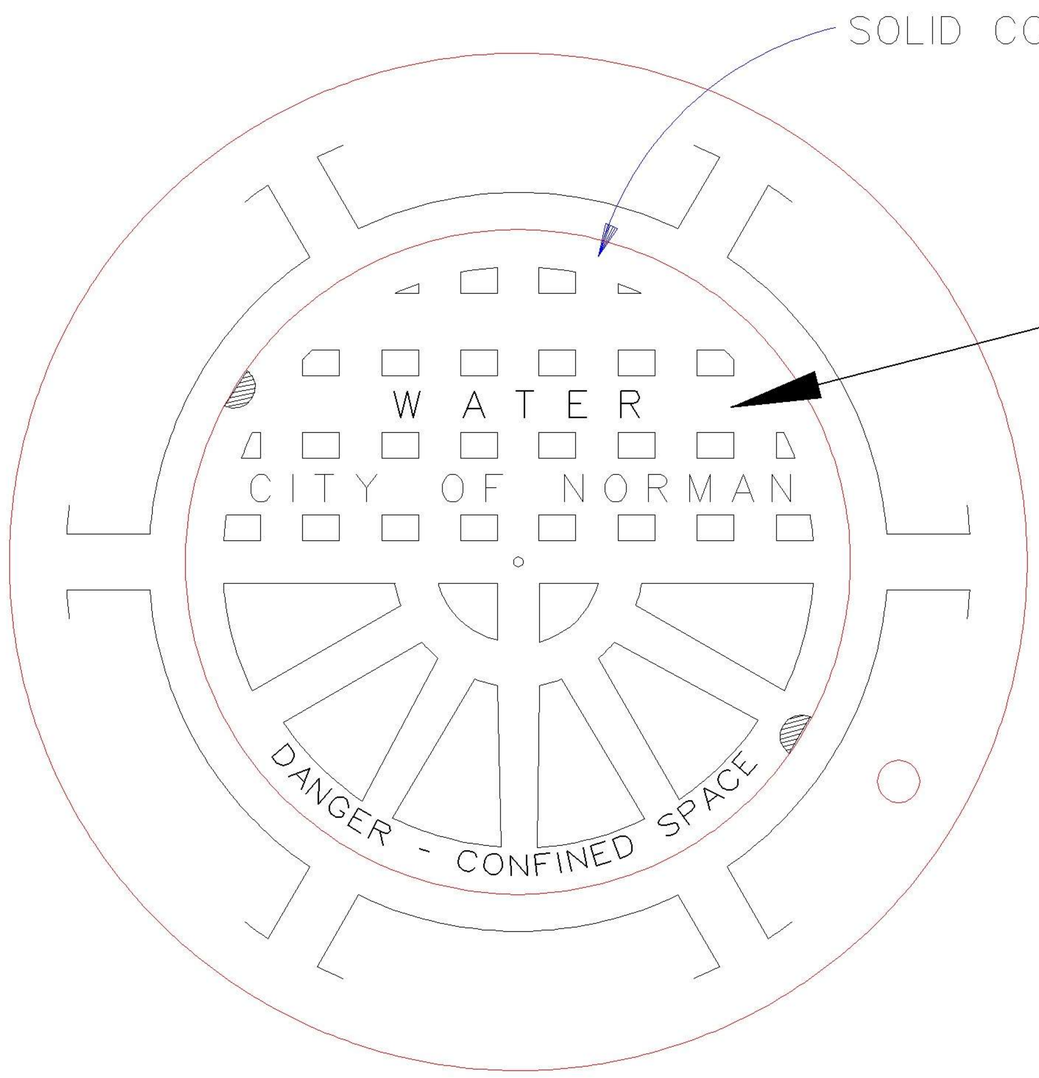

PLAN

* WATER
* CITY OF NORMAN (OPTIONAL)
* CONFINED SPACE ADVISORY
* LOCK

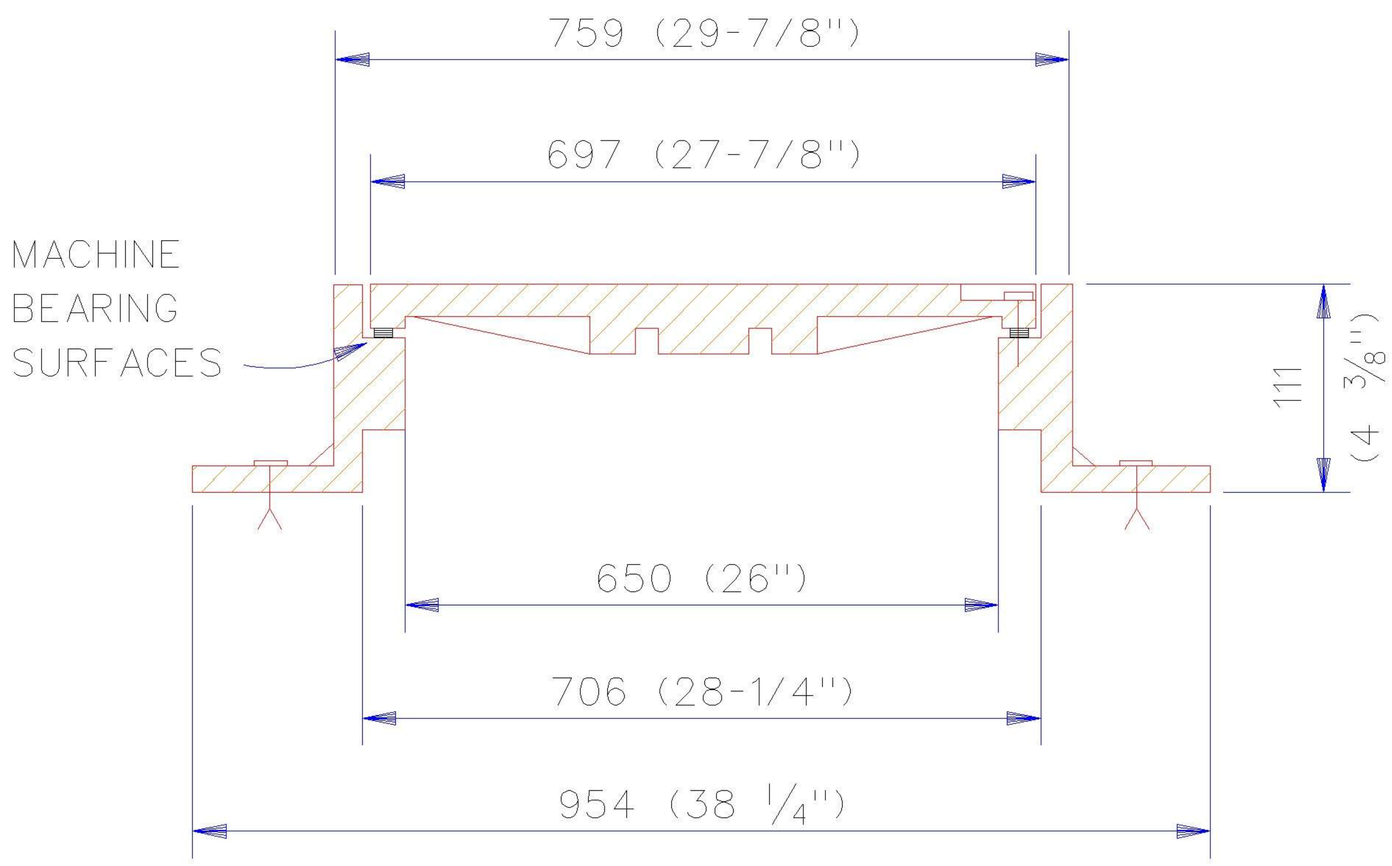

SECTION

NOTES:

1. ACCEPTABLE UNITS:
   - NEENAH NO. R-1682
     or R-1682-S (for flange at top)
   - EAST JORDAN IRONWORKS
     HINGCO
   - WESTERN NO. 100

   OR APPROVED EQUAL

METRIC UNITS ARE IN MM WITH ENGLISH UNITS IN PARENTHESIS, UNLESS INDICATED OTHERWISE.

WATER VAULT FRAME AND COVER

City Engineer Approval:		CITY OF NORMAN, OKLAHOMA	
Approval Date:	Revision Date: 6-8-2006	Rev. No. 1	DRAWING NO. W 05

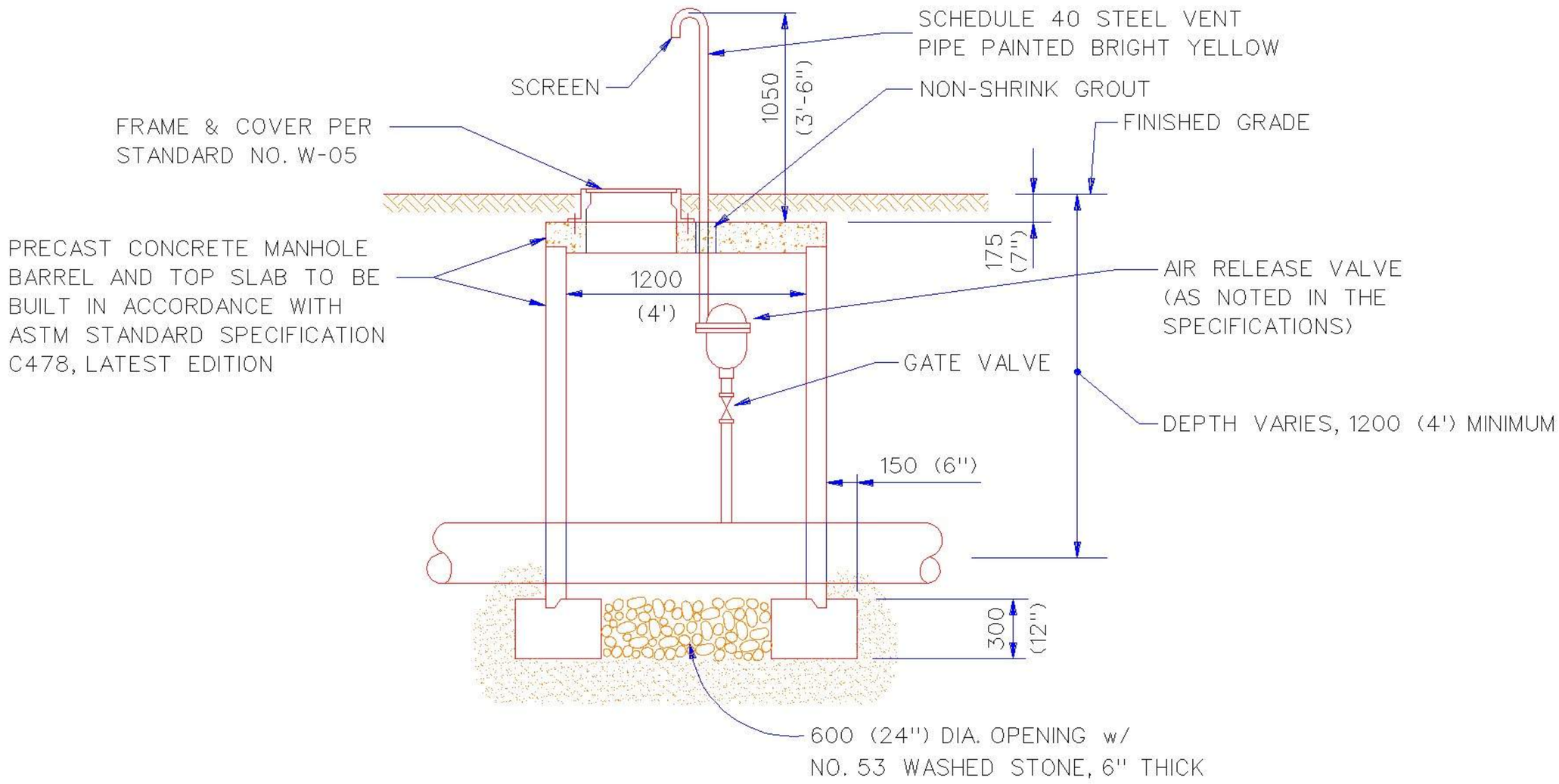

VAULT OVER MAIN

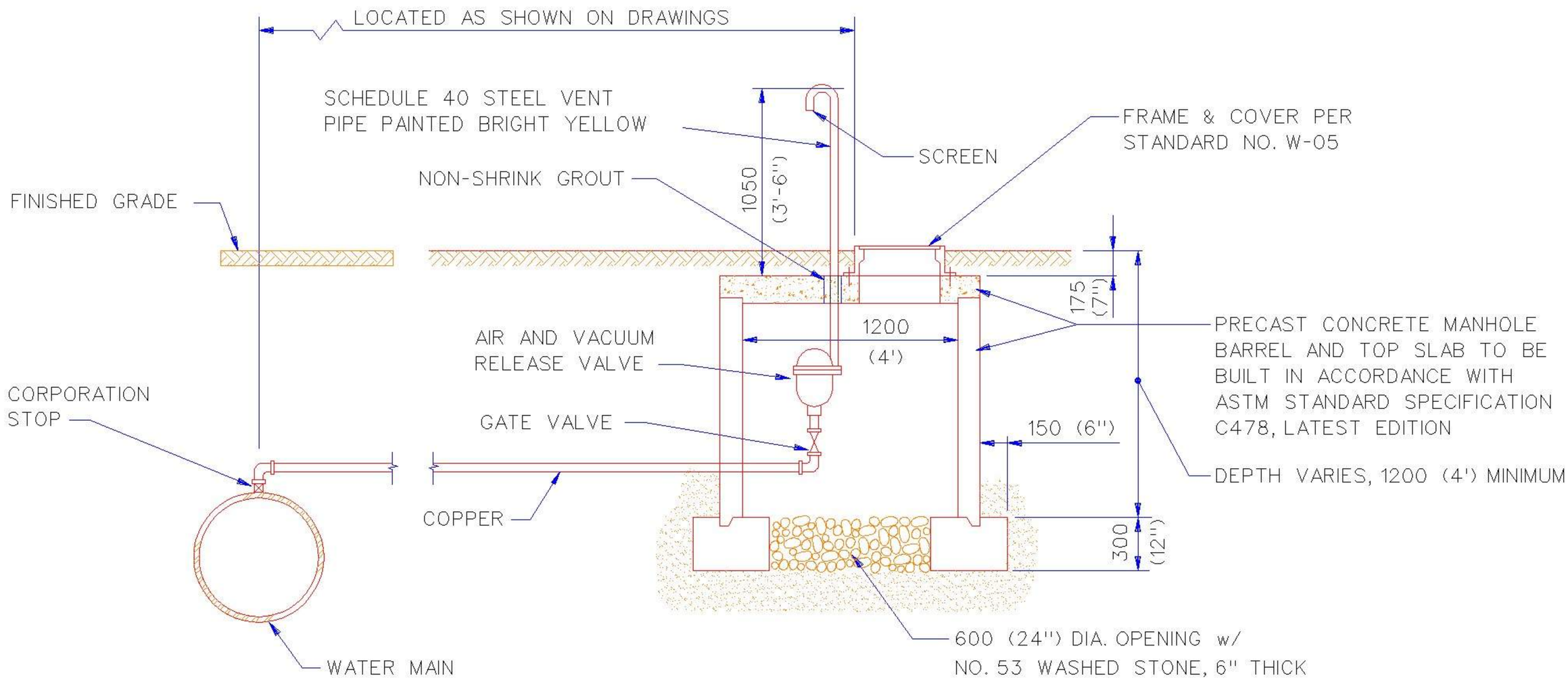

VAULT OFFSET FROM MAIN

METRIC UNITS ARE IN MM WITH ENGLISH UNITS IN PARENTHESIS, UNLESS INDICATED OTHERWISE.

25mm (1") & 50mm (2") WATER AIR RELIEF VALVE & VAULT			
City Engineer Approval:		CITY OF NORMAN, OKLAHOMA	
Approval Date:	Revision Date:	Rev. No. 0	DRAWING NO. W 06

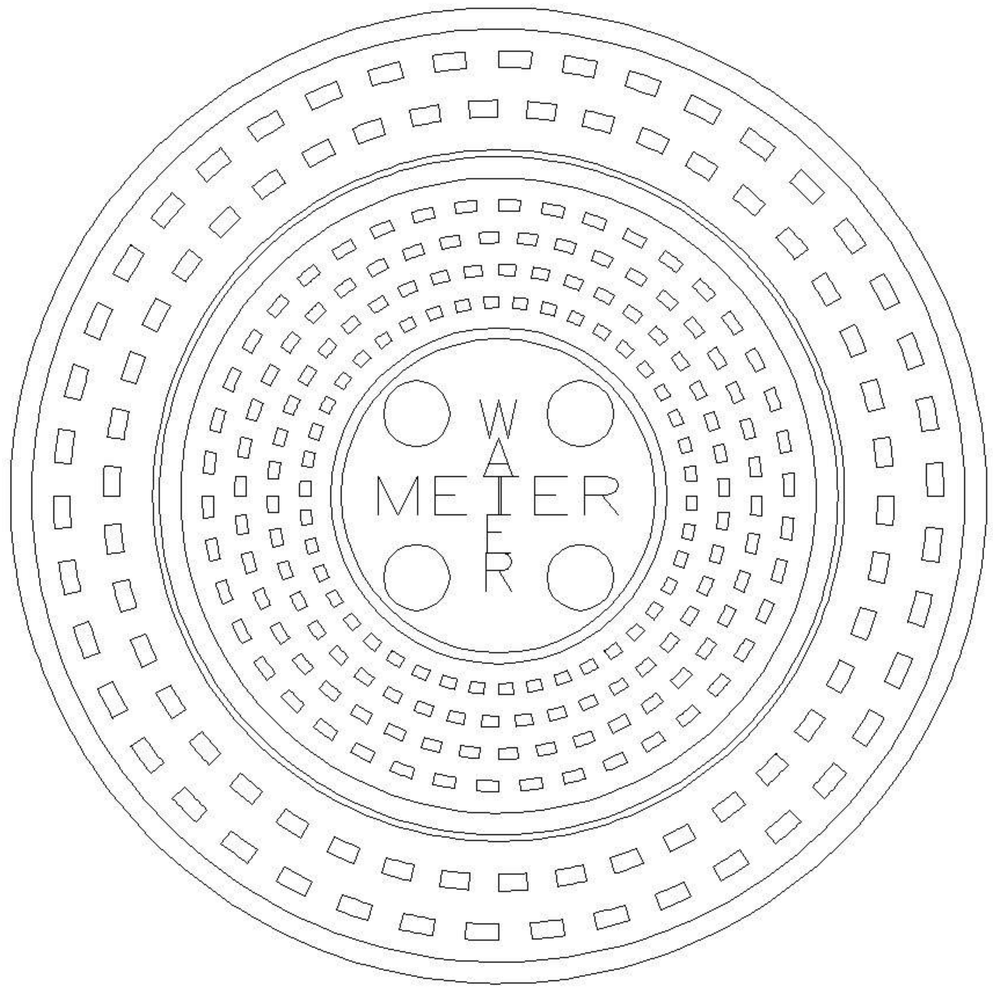

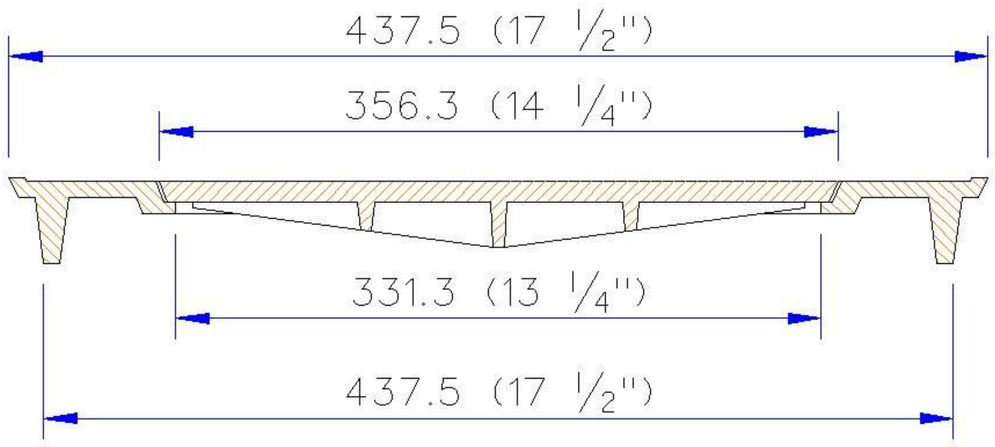

NOTE: RING AND LID TO BE WESTERN FOUNDRY NO. 29
WITHOUT LOCKING MECHANISM

	WEIGHT
LID	8.6 KG (19 LBS)
RING	5.5 KG (12 LBS)
SET	14.1 KG (31 LBS)

METRIC UNITS ARE IN MM WITH ENGLISH UNITS IN PARENTHESIS, UNLESS INDICATED OTHERWISE.

WATER METER FRAME & LID

City Engineer Approval:		CITY OF NORMAN, OKLAHOMA	
Approval Date:	Revision Date:	Rev. No. 0	DRAWING NO. W 07

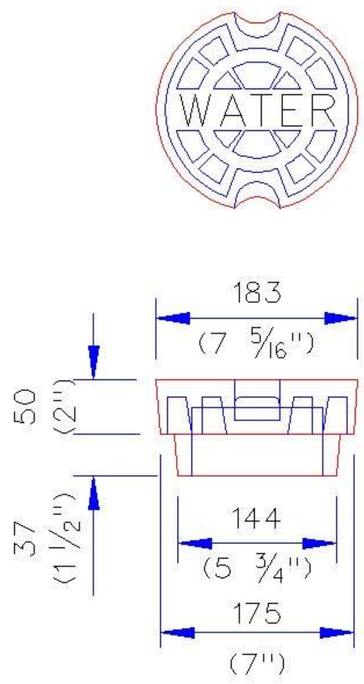

LID

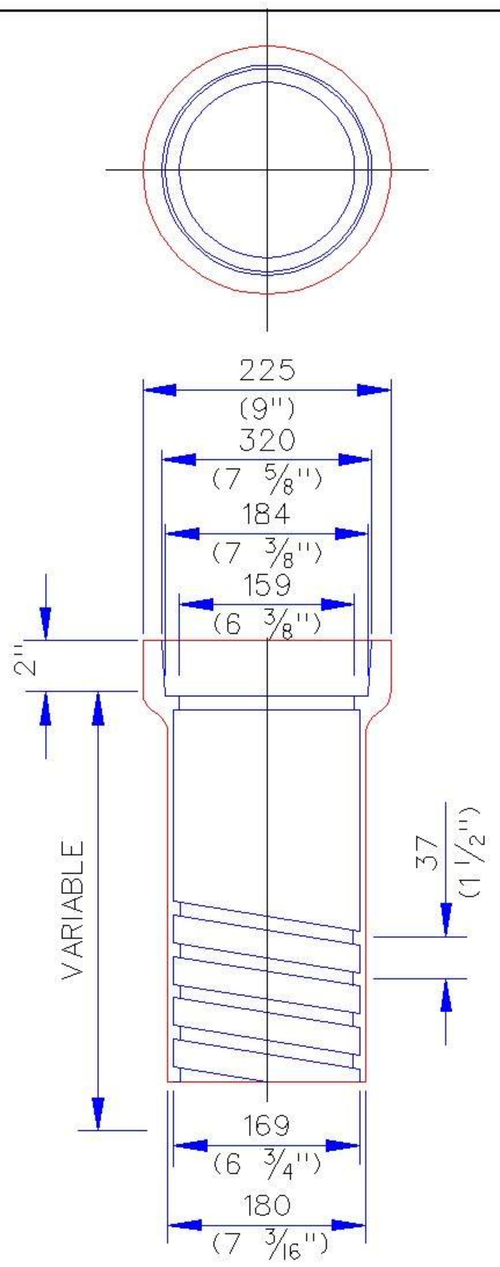

TOP

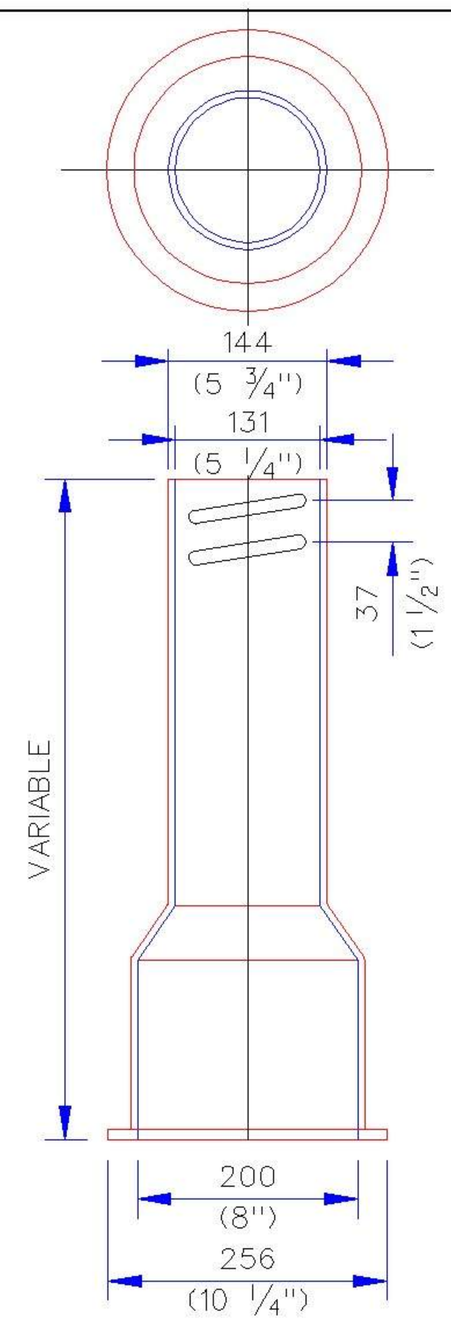

BOTTOM

100mm (4") - 300mm (12") VALVE BOX DETAIL

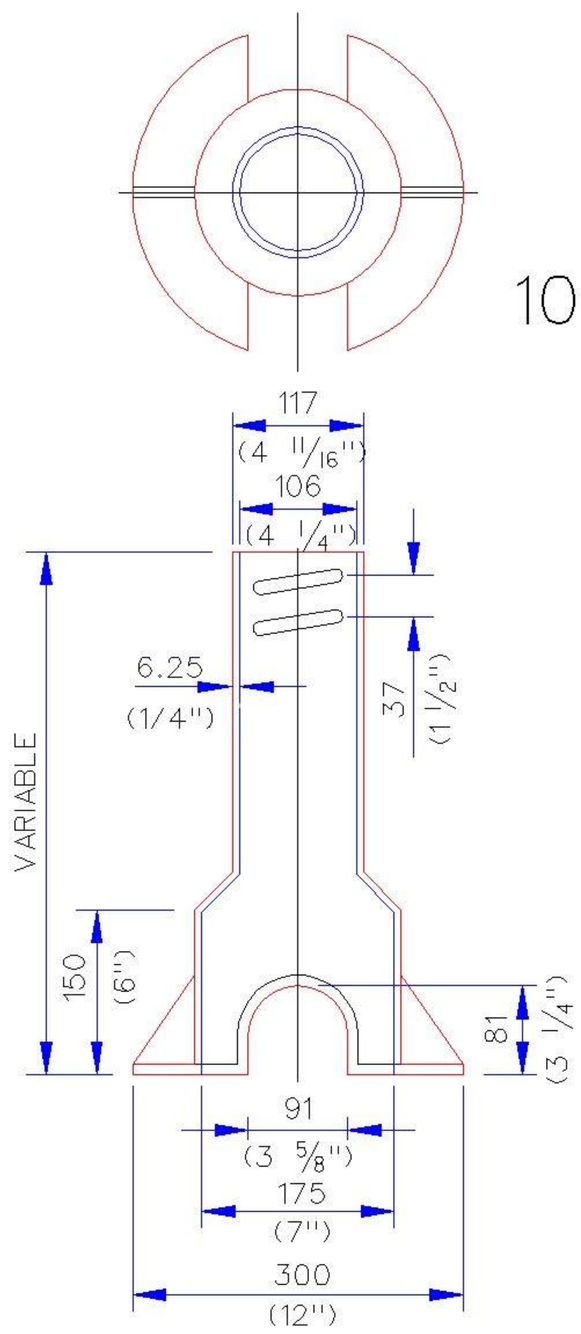

BOTTOM

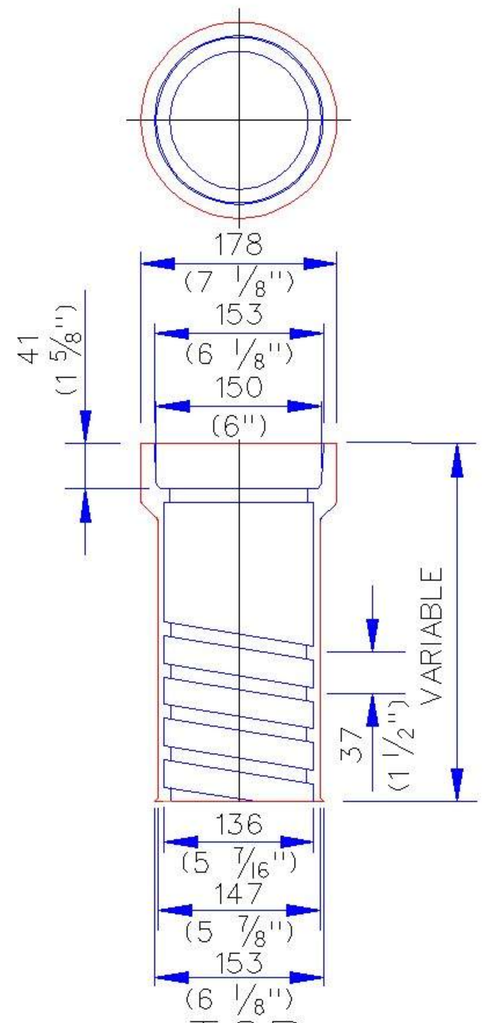

TOP

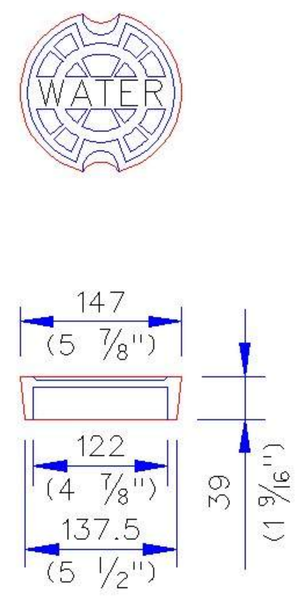

LID

50mm (2") - 75mm (3") VALVE BOX DETAIL

NOTES:

1. WATER LINE CONTRACTOR TO PLACE 600 MM (2') SQUARE CONCRETE PAD AROUND EACH WATER VALVE AFTER FINAL GRADING HAS BEEN COMPLETED AND TRENCHES HAVE SETTLED.
2. VALVE BOXES REQUIRING OVER 2 ADDITIONAL BOTTOM SECTIONS SHALL BE EXTENDED USING PVC PIPE WITH A BOTTOM AND TOP SECTION PLACED ON TOP OF THE PVC PIPE.
3. FOR VALVE BOXES IN STREETS REFER TO ST 15.

METRIC UNITS ARE IN MM WITH ENGLISH UNITS IN PARENTHESIS, UNLESS INDICATED OTHERWISE.

VALVE BOX

City Engineer Approval:		CITY OF NORMAN, OKLAHOMA	
Approval Date:	Revision Date:	Rev. No. 0	DRAWING NO. W 08

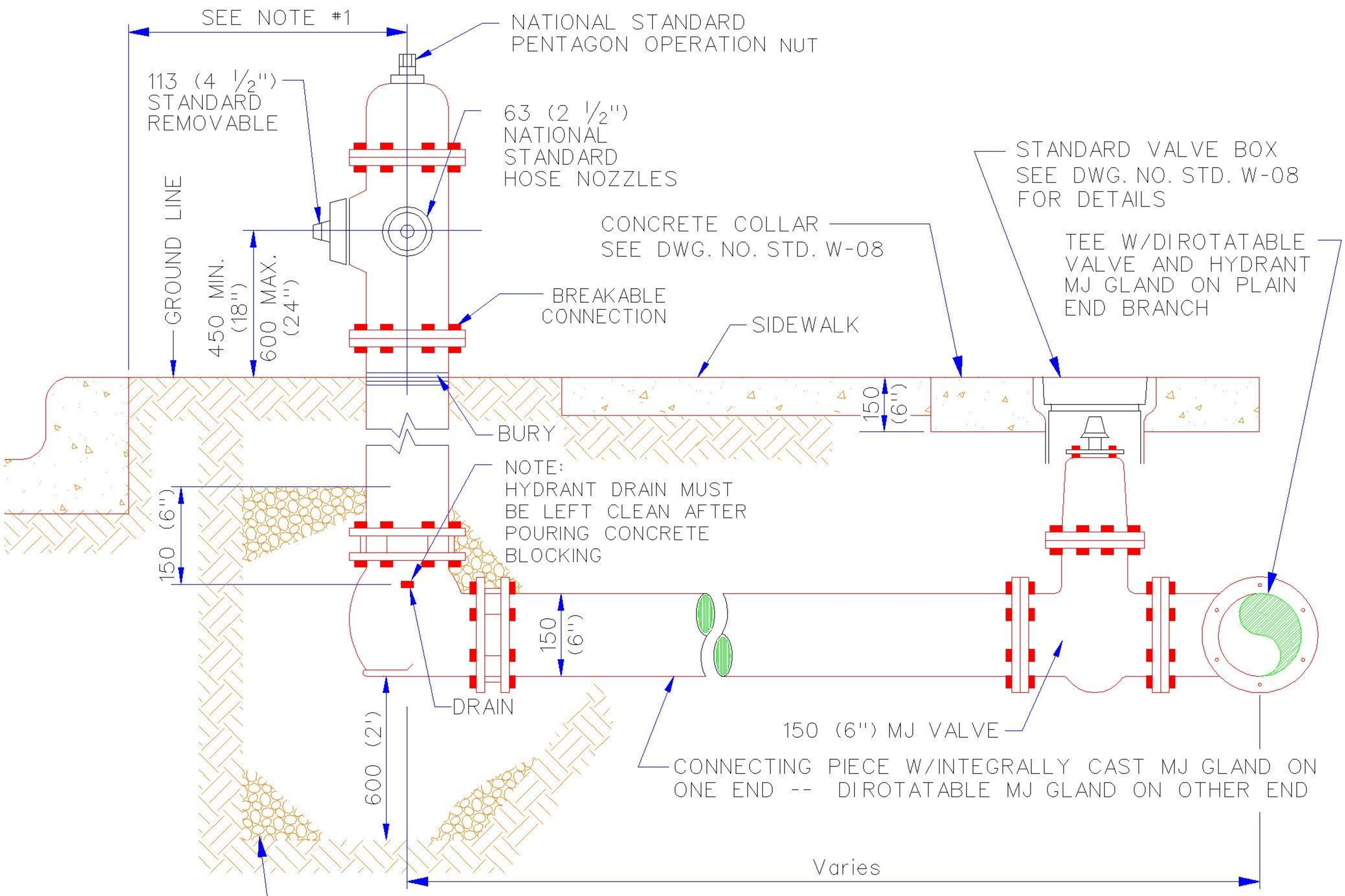

SIDE VIEW

(TYPICAL FOR FIRE HYDRANT ON LOCAL STREET)

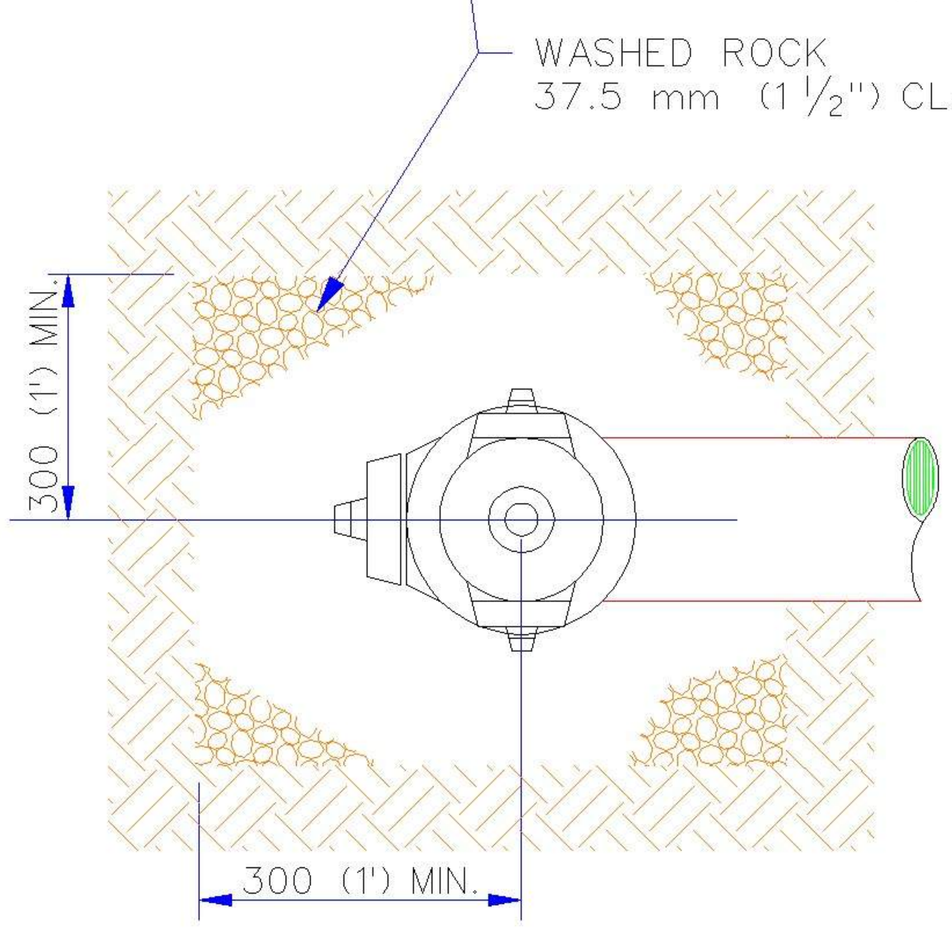

TOP VIEW

NOTE #1: 90 min. to 1830 max. (3'-0" min. to 6'-0" max.) (See Section 2002.8 of 'Engineering Design Criteria' for exceptions and additional informantion)

ASSEMBLY INCLUDES

3-WAY FIRE HYDRANT
150 mm (6") CONNECTING PIECE
150 mm (6") MJ GATE VALVE
150 mm (6") VALVE & HYDRANT TEE
VALVE BOX

METRIC UNITS ARE IN MM WITH ENGLISH UNITS IN PARENTHESIS, UNLESS INDICATED OTHERWISE.

FIRE HYDRANT ASSEMBLY

City Engineer Approval:		CITY OF NORMAN, OKLAHOMA	
Approval Date:	Revision Date: 12-17-2004	Rev. No. 3	DRAWING NO. W 09a

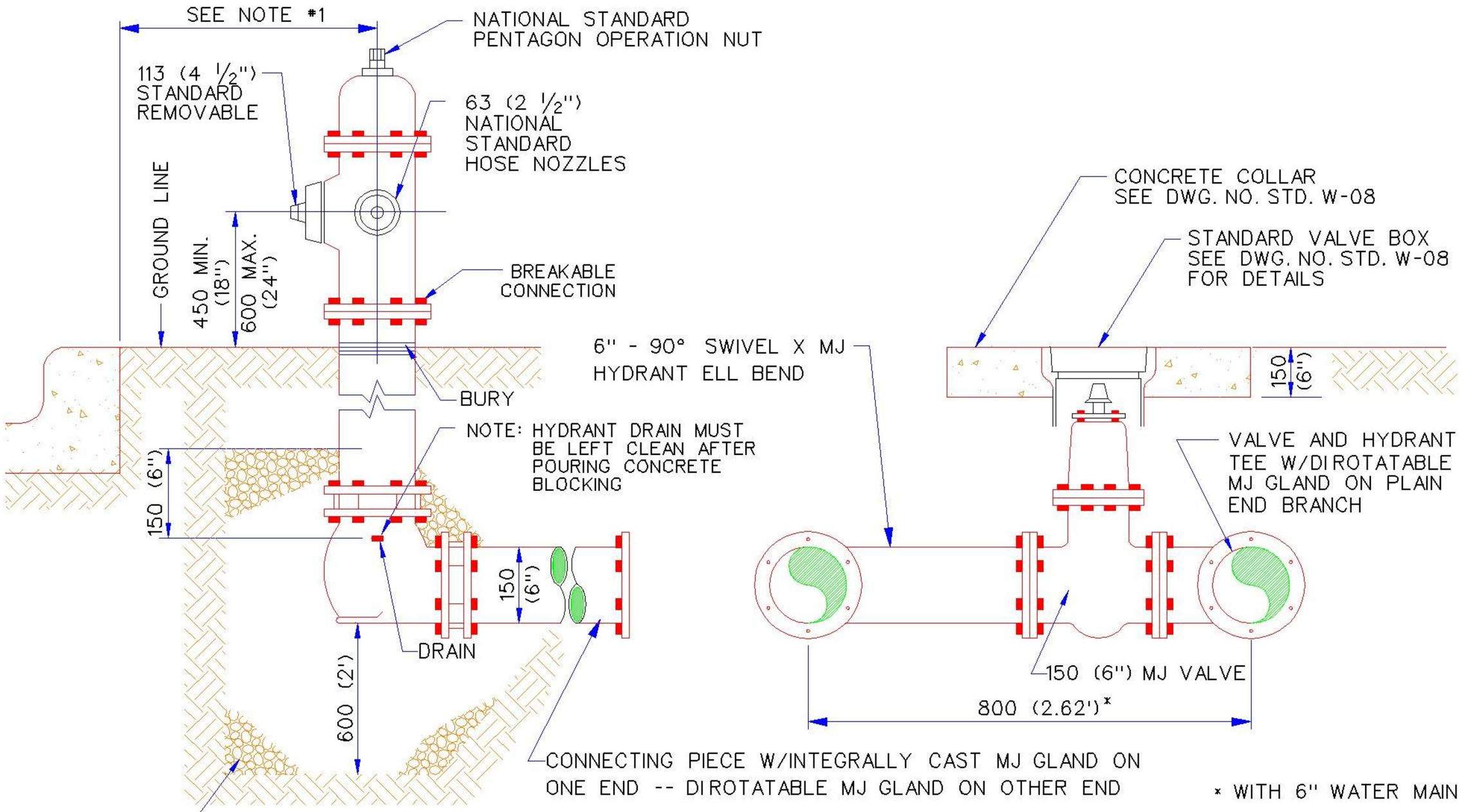

SIDE VIEW

(TYPICAL FOR FIRE HYDRANT ON LOCAL STREET)

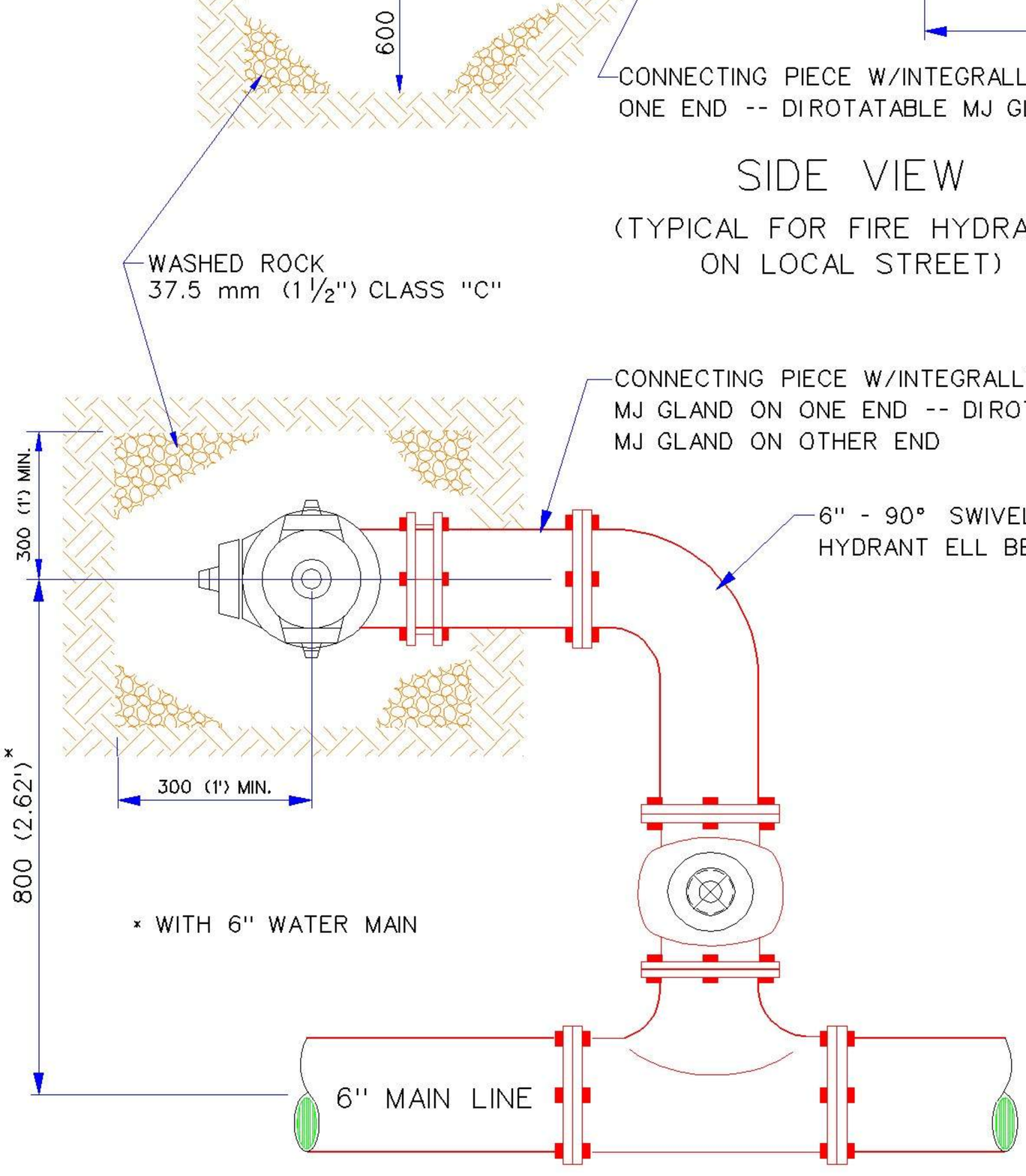

TOP VIEW

NOTE #1: 90 min. to 1830 max. (3'-0" min. to 6'-0" max.)

(See Section 2002.8 of 'Engineering Design Criteria' for exceptions and additional informantion)

ASSEMBLY INCLUDES

3-WAY FIRE HYDRANT
150 mm (6") CONNECTING PIECE
150 mm (6") 90° BEND
150 mm (6") MJ GATE VALVE
150 mm (6") VALVE & HYDRANT TEE VALVE BOX

METRIC UNITS ARE IN MM WITH ENGLISH UNITS IN PARENTHESIS, UNLESS INDICATED OTHERWISE.

FIRE HYDRANT ASSEMBLY (ALTERNATE)

City Engineer Approval:		CITY OF NORMAN, OKLAHOMA	
Approval Date:	Revision Date: 7-21-2003	Rev. No. 0	DRAWING NO. W 09b

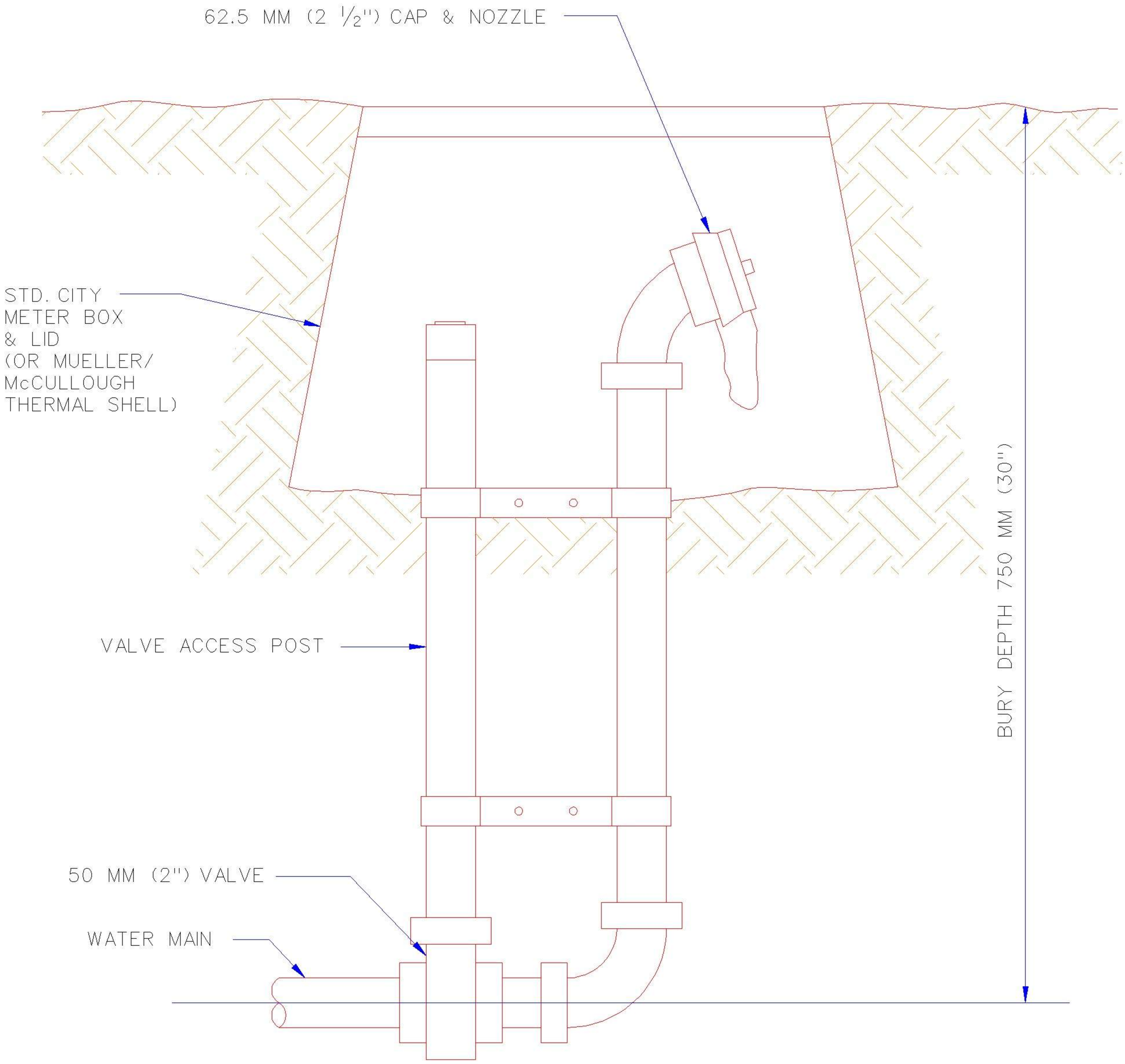

1. FABRICATED HIDDEN TYPE FLUSHING HYDRANT TO BE MUELLER NO. A-410 OR EQUAL.

METRIC UNITS ARE IN MM WITH ENGLISH UNITS IN PARENTHESIS, UNLESS INDICATED OTHERWISE.

FLUSHING HYDRANT

City Engineer Approval:		CITY OF NORMAN, OKLAHOMA	
Approval Date:	Revision Date:	Rev. No. 0	DRAWING NO. W 10

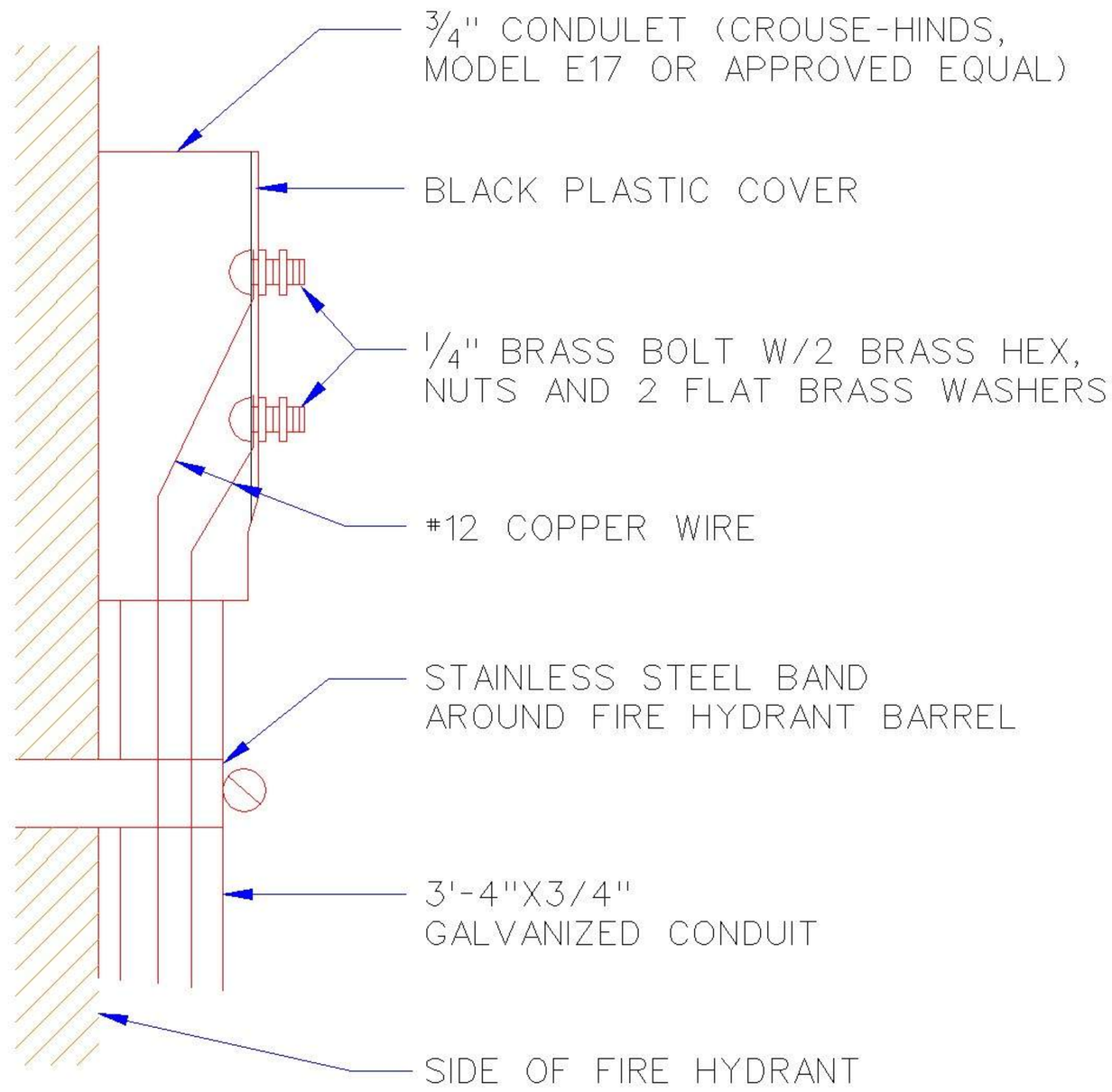

TRACER WIRE WEATHER-HEAD DETAIL

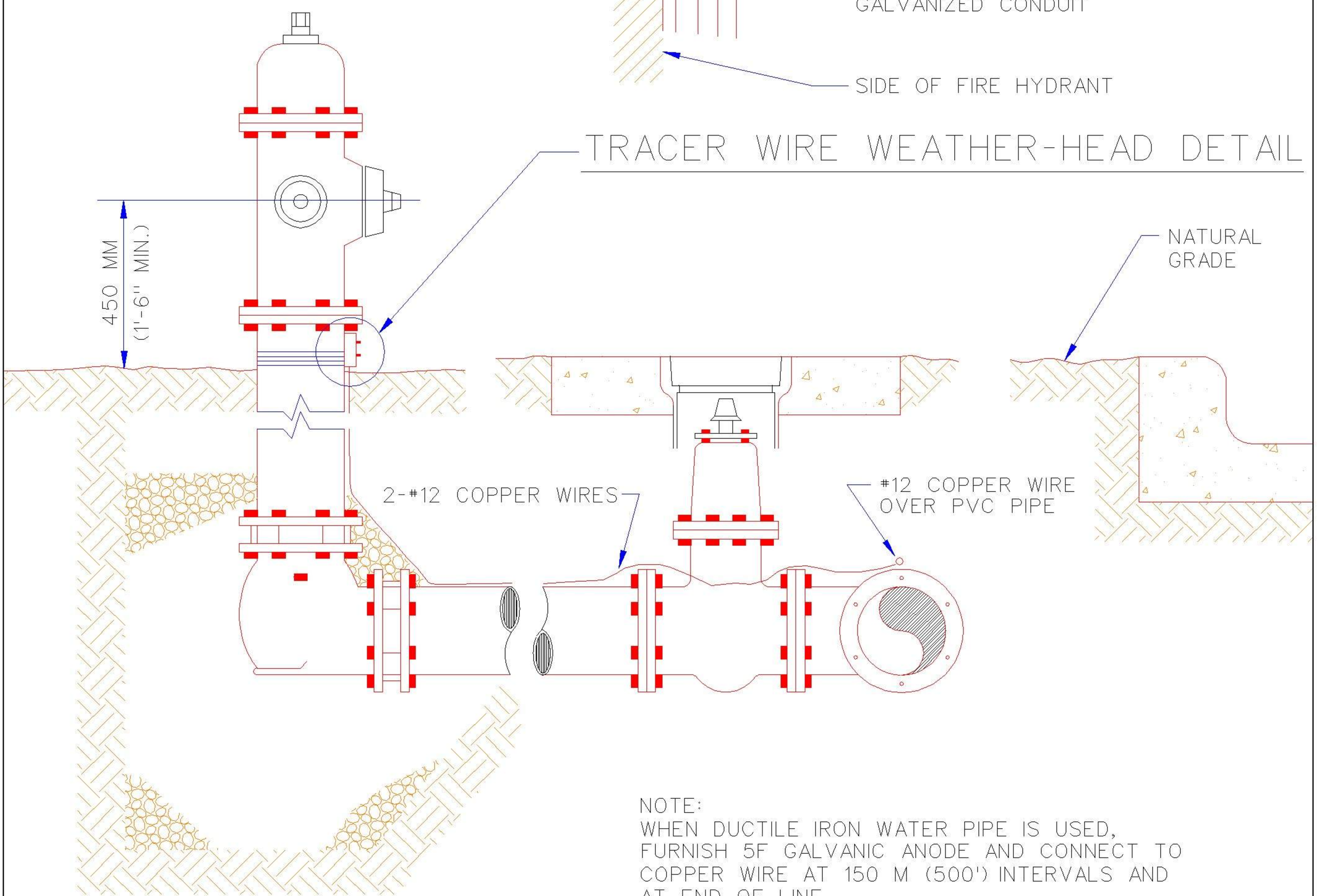

NOTE:
WHEN DUCTILE IRON WATER PIPE IS USED, FURNISH 5F GALVANIC ANODE AND CONNECT TO COPPER WIRE AT 150 M (500') INTERVALS AND AT END OF LINE.

METRIC UNITS ARE IN MM WITH ENGLISH UNITS IN PARENTHESIS, UNLESS INDICATED OTHERWISE.

TRACER WIRE & WEATHERHEAD ON PVC WATER LINES

City Engineer Approval:		CITY OF NORMAN, OKLAHOMA	
Approval Date:	Revision Date: 7-28-99	Rev. No. 1	DRAWING NO. W 11

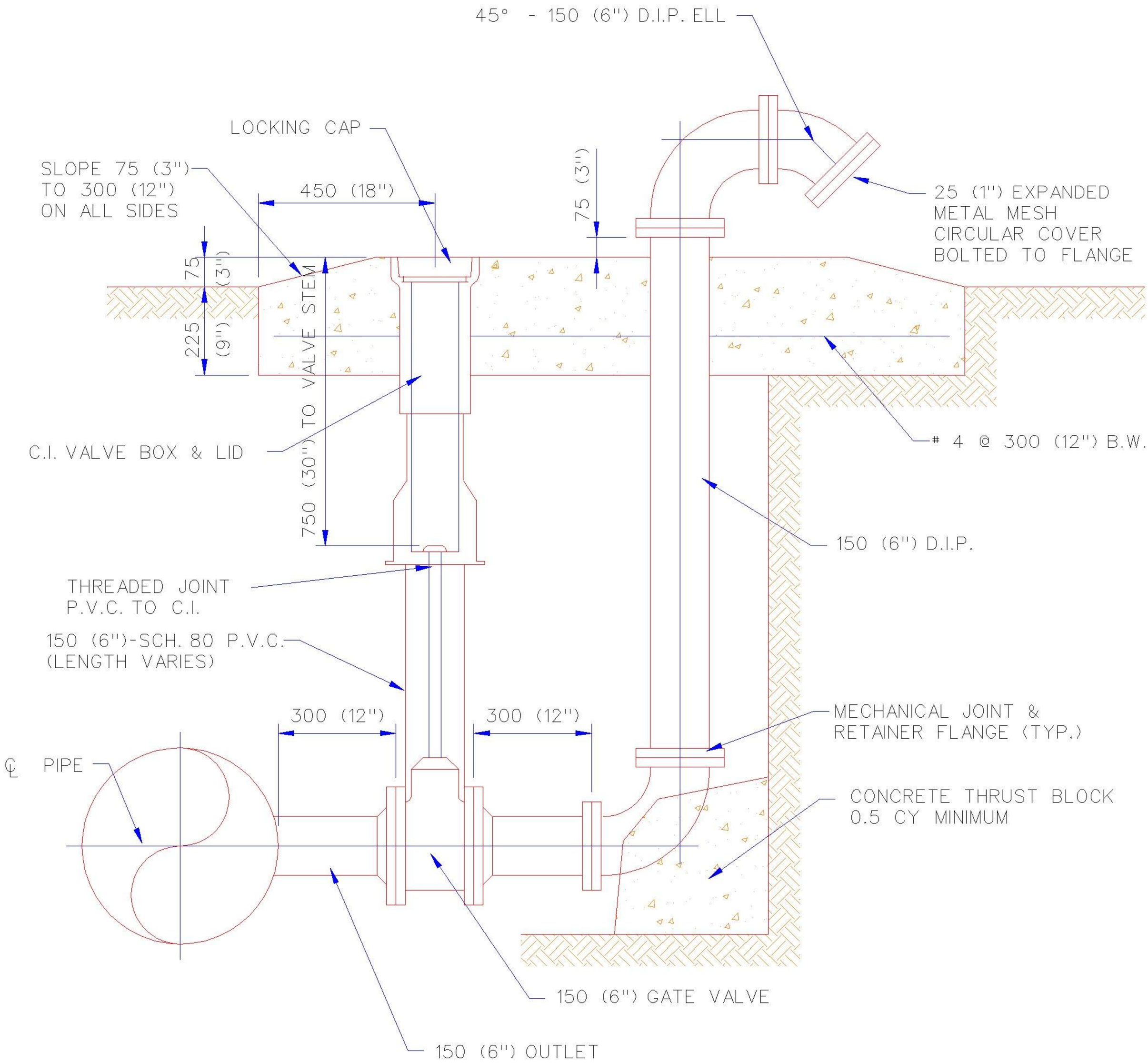

NOTES:

1. ALL EXPOSED METAL TO RECEIVE 2 COATS OF ALUMINUM INDUSTRIAL GRADE PAINT.
2. CONCRETE PAD TO BE 800 MM X 1800 MM X 300 MM (2'-8" X 6'-0" X 1'-0")

METRIC UNITS ARE IN MM WITH ENGLISH UNITS IN PARENTHESIS, UNLESS INDICATED OTHERWISE.

BLOW OFF VALVE ASSEMBLY

City Engineer Approval:		CITY OF NORMAN, OKLAHOMA	
Approval Date:	Revision Date:	Rev. No. 0	DRAWING NO. W 12

Rev. No. 1

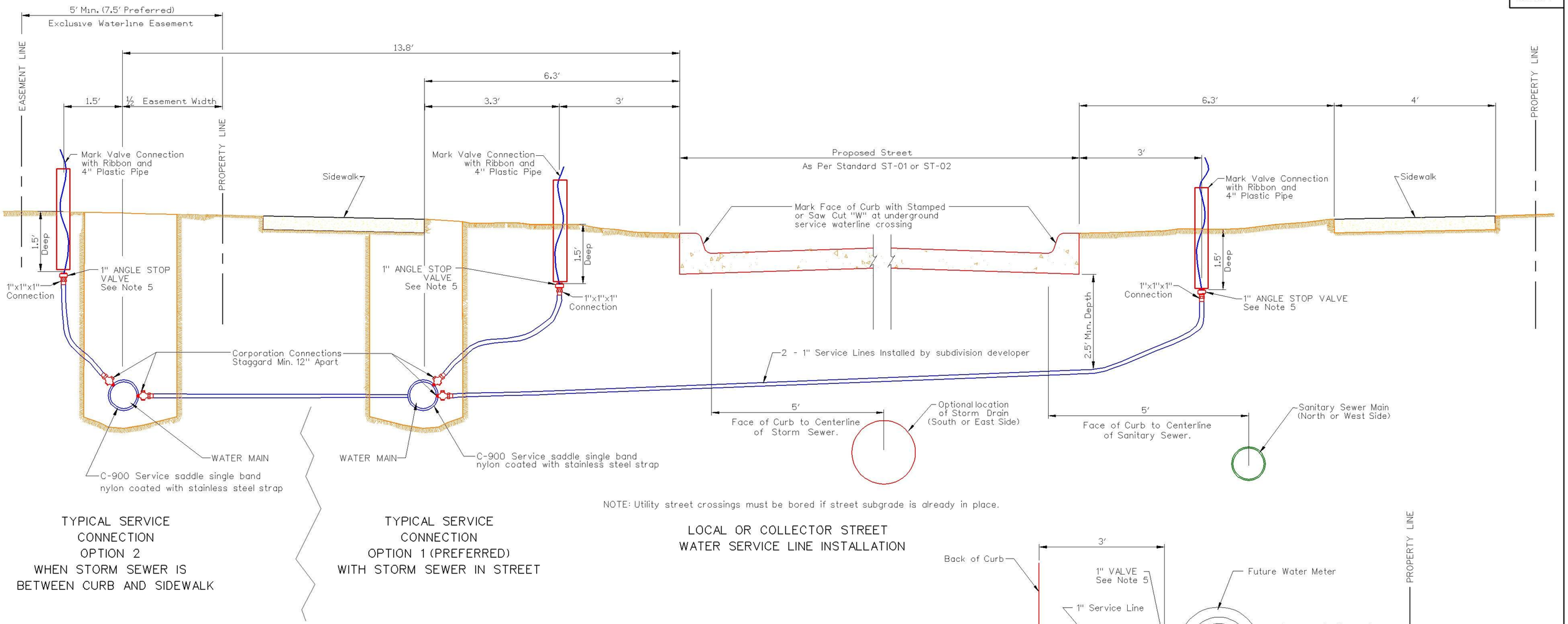

TYPICAL SERVICE CONNECTION OPTION 2 WHEN STORM SEWER IS BETWEEN CURB AND SIDEWALK

TYPICAL SERVICE CONNECTION OPTION 1 (PREFERRED) WITH STORM SEWER IN STREET

NOTE: Utility street crossings must be bored if street subgrade is already in place.

LOCAL OR COLLECTOR STREET WATER SERVICE LINE INSTALLATION

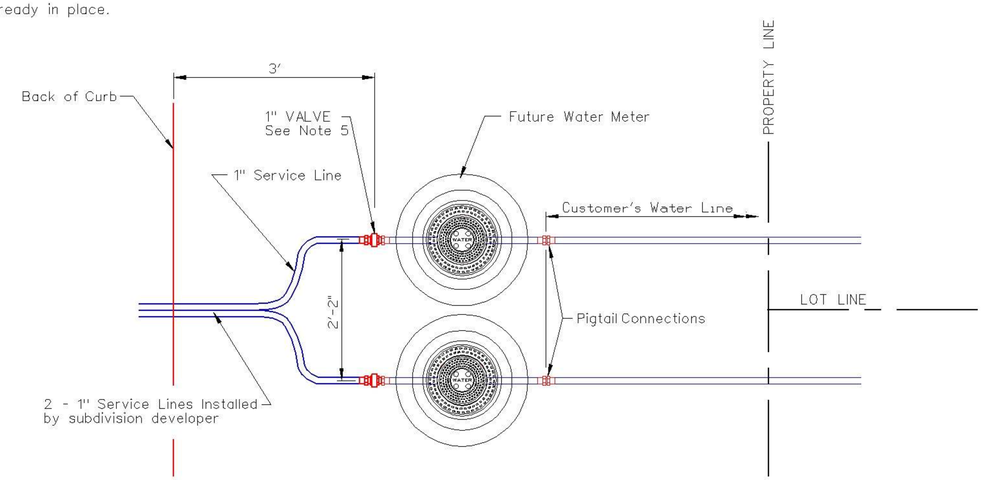

PLAN VIEW OF SIDE BY SIDE WATER METER SET

NOTES:

1. Service Lines shall be 1" Copper Type K Soft.
2. A minimum depth of service line is 2'-6" below bottom of roadway grading. trench width shall be no greater than 8" with sand backfill. No compaction tests will be required. If trench width is greater than 8" it shall have compacted (water conditioned) backfill and approved by the City Engineer.
3. Service saddles shall be C-900 nylon coated with single band stainless steel strap and 1" corporation pack joint compression with cc threads.
4. Taps for corporation stops are to be made horizontally or at an angle of 45° with the horizontal (never vertically). Multiple taps (two or more) are to be staggered around the pipe circumference and be at least 12 inches apart. All taps are to be made in those sections of mains not under pavement. Particular attention will be given to their location around cul-de-sacs, elbows, etc.
5. Angle Stop Valves shall be used on end of service line, with pack joint connection. Angle Stop Valves shall meet the applicable requirements of AWWA C800, ASTM B-62 for 85-5-5-5 composition bronze, and USAS B2.1. Angle stops shall be Mueller, McDonald, Ford, or equal. Angle Ball Service Valve Reference No. BA 41-444W full port valve or equal. Cover Angle Stop valve with polyethylene, minimum 3 mil thickness, to prevent entry of any foreign materials.
6. Blue Magnitized Plastic Ribbon shall be tied to valve and extended 18" above finish grade to mark valve connection with a 4" PVC plastic pipe at the same location.

This standard indicates the desired geometric configuration referenced to street pavings and property lines. The 2-1" service lines shown in the under street crossing is recommended by the city. When installed by contractors in new subdivisions, actual size shall be determined by the developer or the consulting engineer. Where smaller service lines are installed, prospective customers should be warned that low pressure may be expected during periods of peak demand, particularly when one or more of the following conditions exist:

1. Individual lots contain more than 7500 square feet, or
2. Water main to which service line is connected is less than six inch diameter, or
3. Where house service line is more than 100 feet in length.

The alternate configurations may be installed in lieu of that shown upon approval of the City Engineer.

Engineering Division, City of Norman

WATER METER SERVICE CONNECTION INSTALLATION

APPROVED BY: _____ DATE _____ BOB HANGER, CITY ENGINEER	DRAWN: B	DATE: 6/9/2006	Drawing No: W-13 PAGE: 4000 - 23

Rev. No. 4

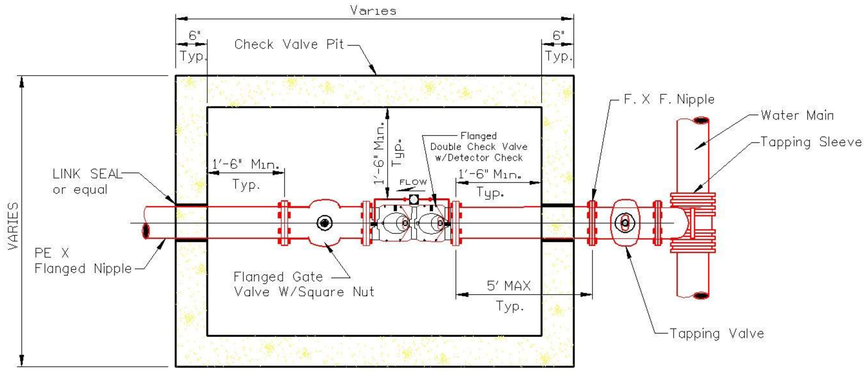

STANDARD CHECK VALVE

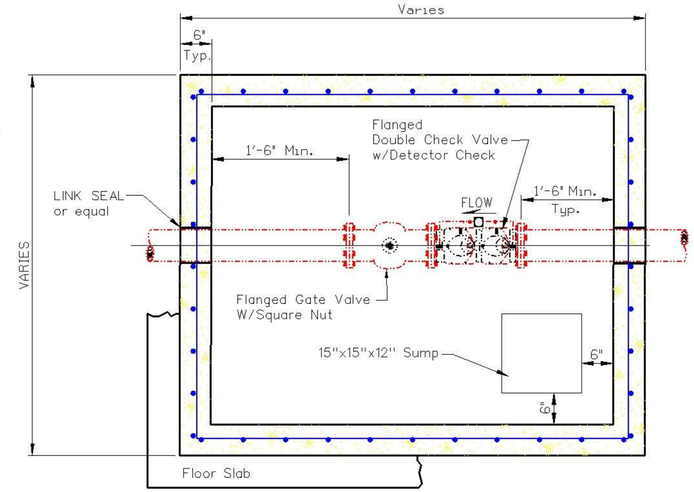

PLAN

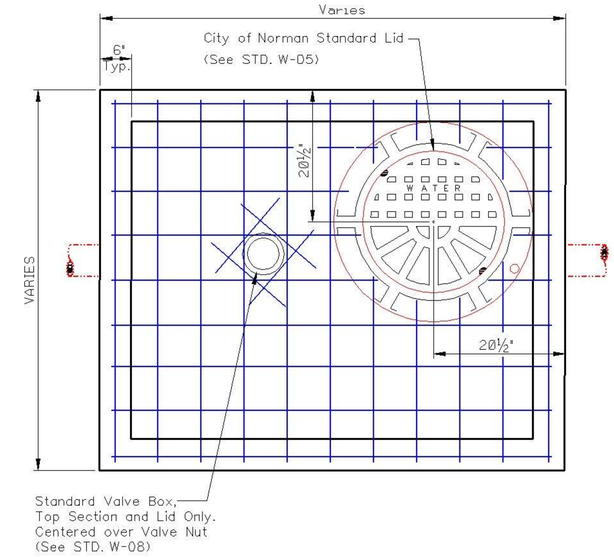

PLAN OF TOP SECTION

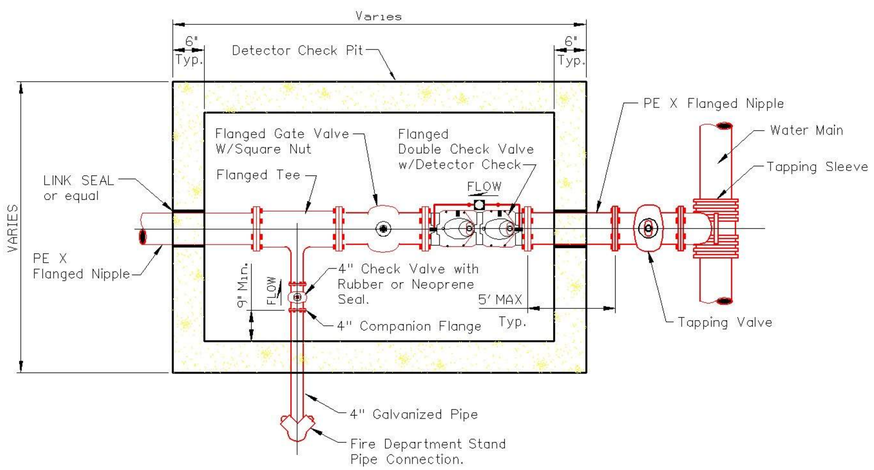

STANDARD CHECK VALVE AND STAND PIPE

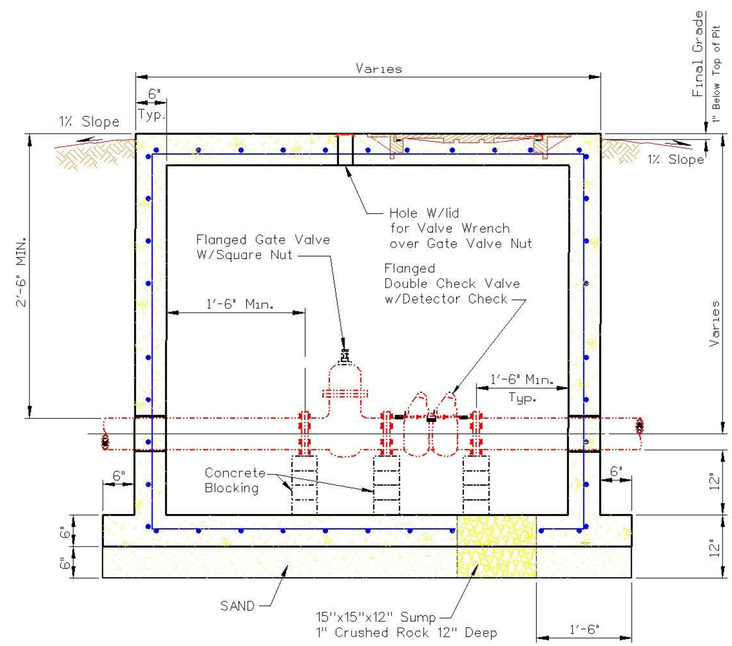

ELEVATION

STANDARD METER PIT FOR STANDARD CHECK VALVE, STANDARD CHECK VALVE WITH FIRE HYDRANT AND STAND PIPE OR STANDARD CHECK VALVE AND STAND PIPE

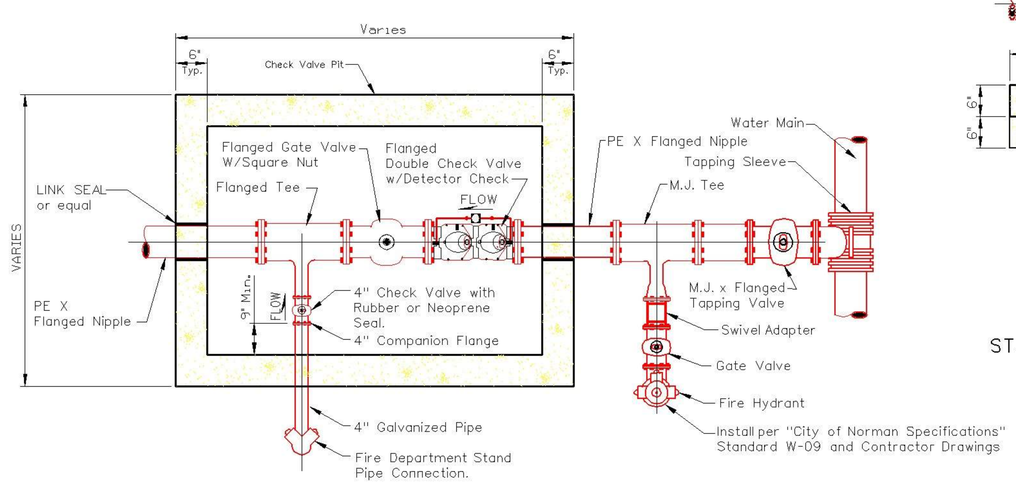

STANDARD CHECK VALVE WITH FIRE HYDRANT AND STAND PIPE

NOTES:

1. A minimum clearance of 18" from the body or flanges of waterline valves and other devices to the inside wall of the pit except as shown or noted.
2. Vault to be constructed of Class A Concrete as per ODOT Section 701 with a minimum 28-day compressive strength of 3000 PSI
3. Reinforcing Steel shall be grade 60, #4 Bars at 8" Centers
4. Floor, Walls & Top may be poured separate with the use of Steel ties at all construction joints.
5. Valve vault to be located on public property or in a designated utility easement.
6. All Exterior metal surfaces to be painted a fire hydrant red.
7. All fire hydrants and stand pipe connections to have City of Norman standard thread.
8. If double detector check is installed as shown, the Fire Department does not require a double check valve in building. However, the owner has the option of installing only a single detector check valve at the water main and a double check valve in the building. If this option is chosen, then a remote read located on the exterior of the building is required.
9. The gate valve shown inside the vault may be located just outside this vault toward the building.
10. Alternate designs shall be reviewed by the City Engineer.

Engineering Division, City of Norman

FIRE LINE STANDARD

APPROVED BY: _____ DATE _____ BOB HANGER, CITY ENGINEER	DRAWN: JB	DATE: 3/16/2006	Standard: W-14 PAGE: 4000 - 24

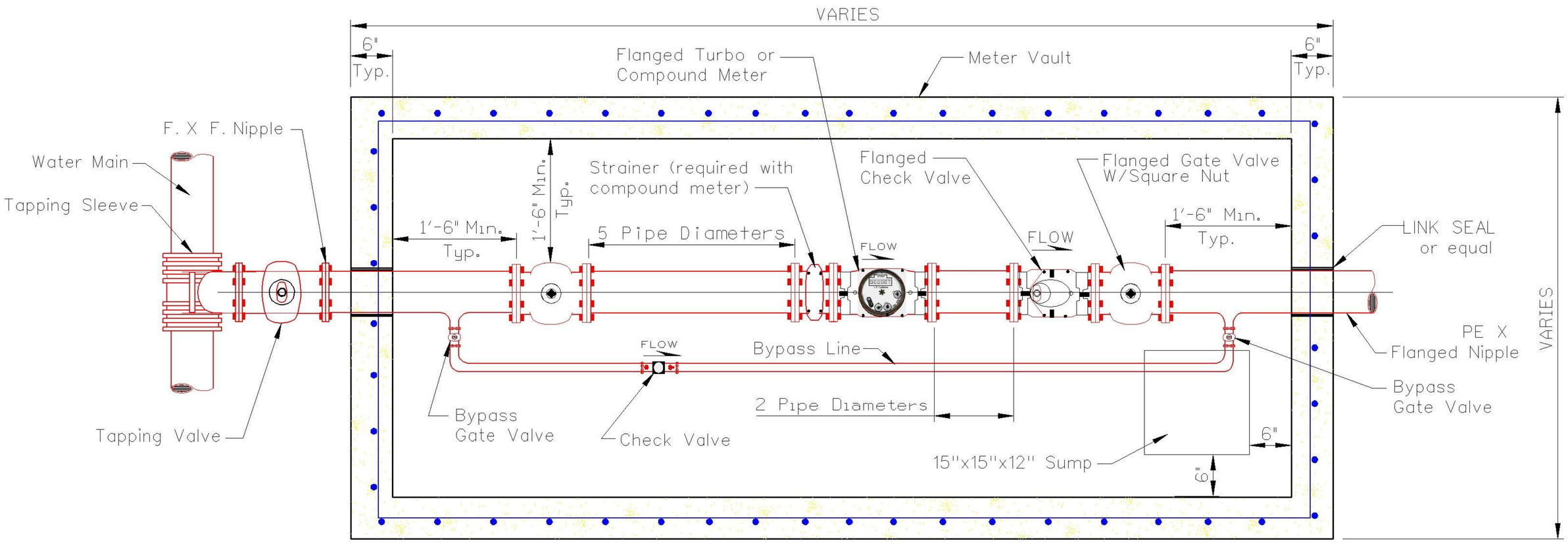

PLAN OF WATER METER VAULT LAYOUT

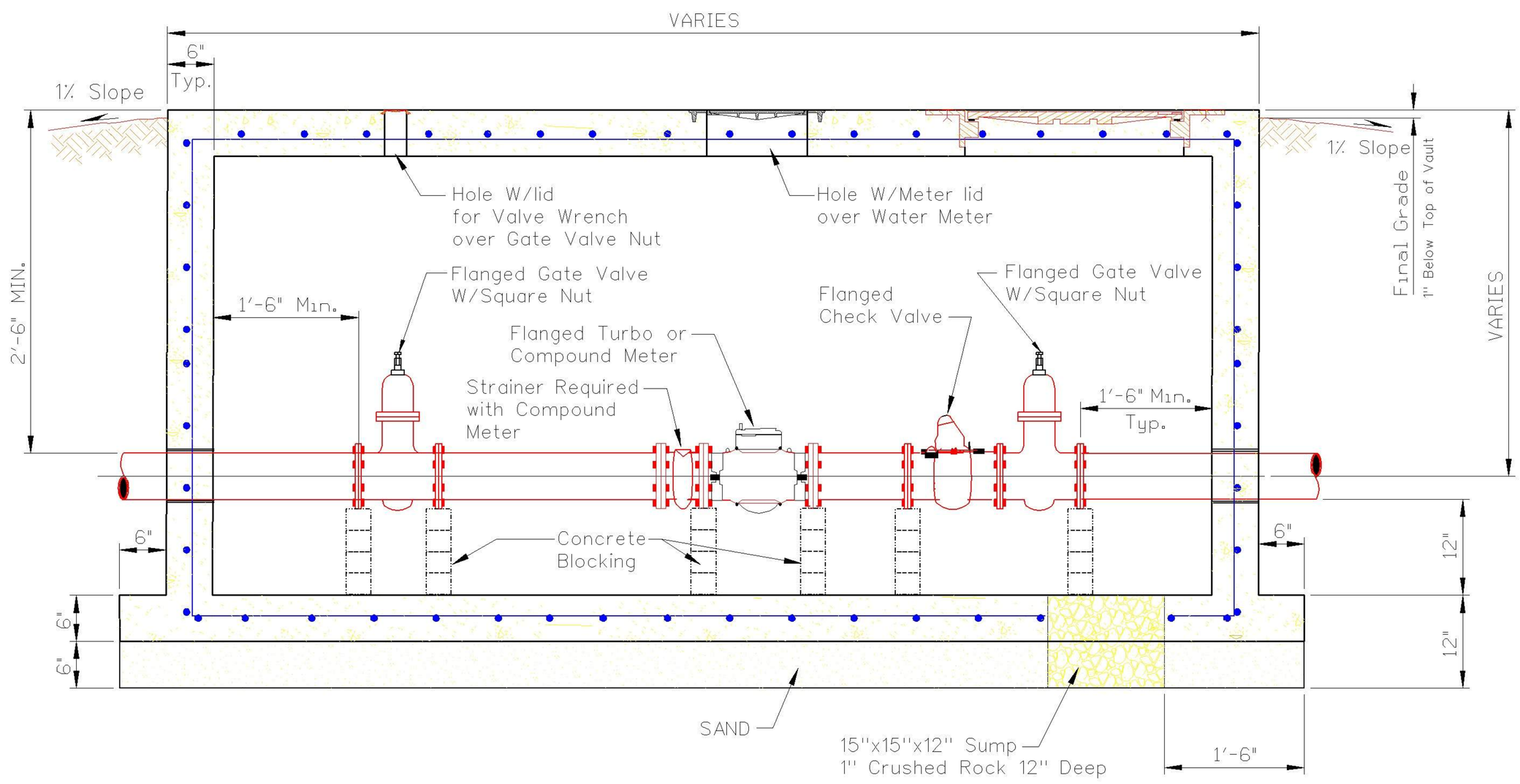

ELEVATION OF WATER METER VAULT LAYOUT

NOTES:

1. A minimum clearance of 18" from the body or flanges of waterline valves and other devices to the inside wall of the pit except as shown or noted.
2. Meter may be Compound or Turbo and a Strainer is required for use with Compound Meters.
3. A Bypass line is required for the meter.
4. A Check Valve is required a minimum of two pipe diameters downstream from the meter.
5. If top of water meter is over 30" deep from top of lid, meter will require remote reading systems, this will eliminate the confined space entry permit required to read the meter.
6. Alternate designs shall be reviewed by the Utilities Engineer.

WATER METER VAULT LAYOUT

City Engineer Approval:		CITY OF NORMAN, OKLAHOMA	
Approval Date:	Revision Date: 6-6-2006	Rev. No. 0	DRAWING NO. W 15

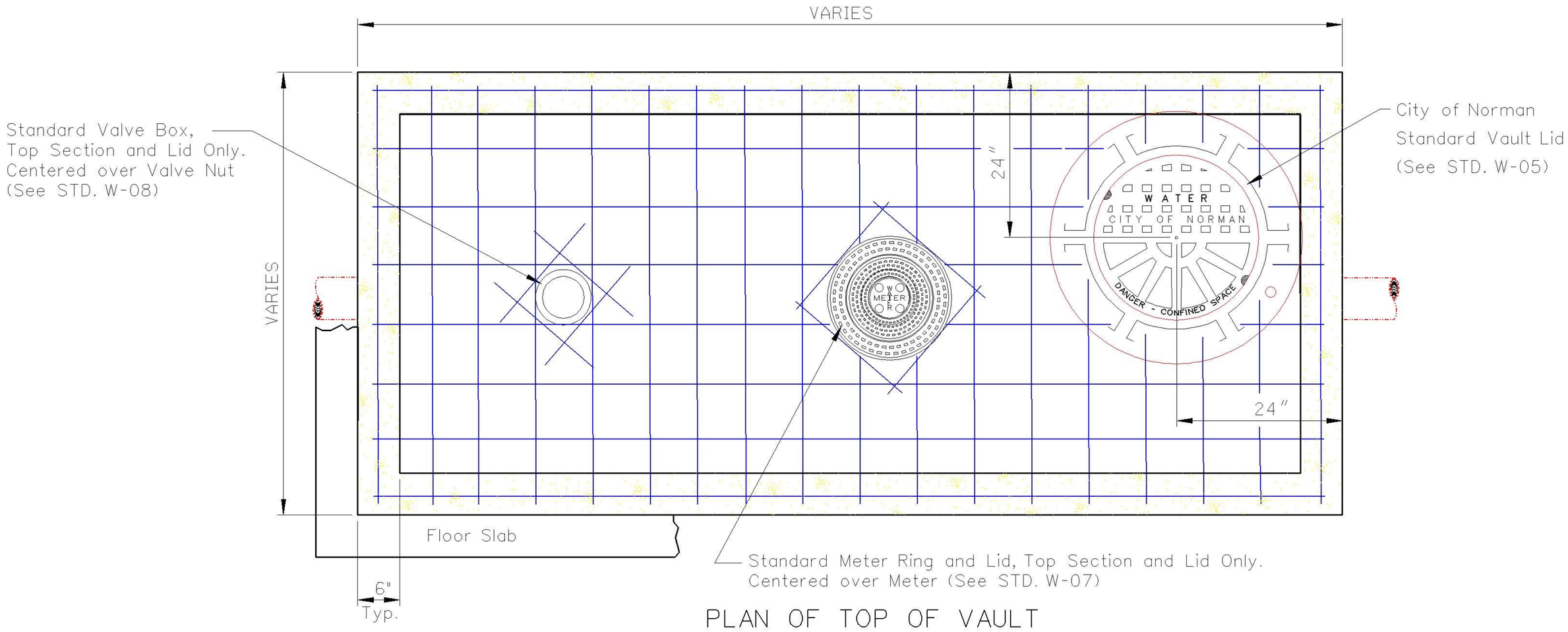

PLAN OF TOP OF VAULT

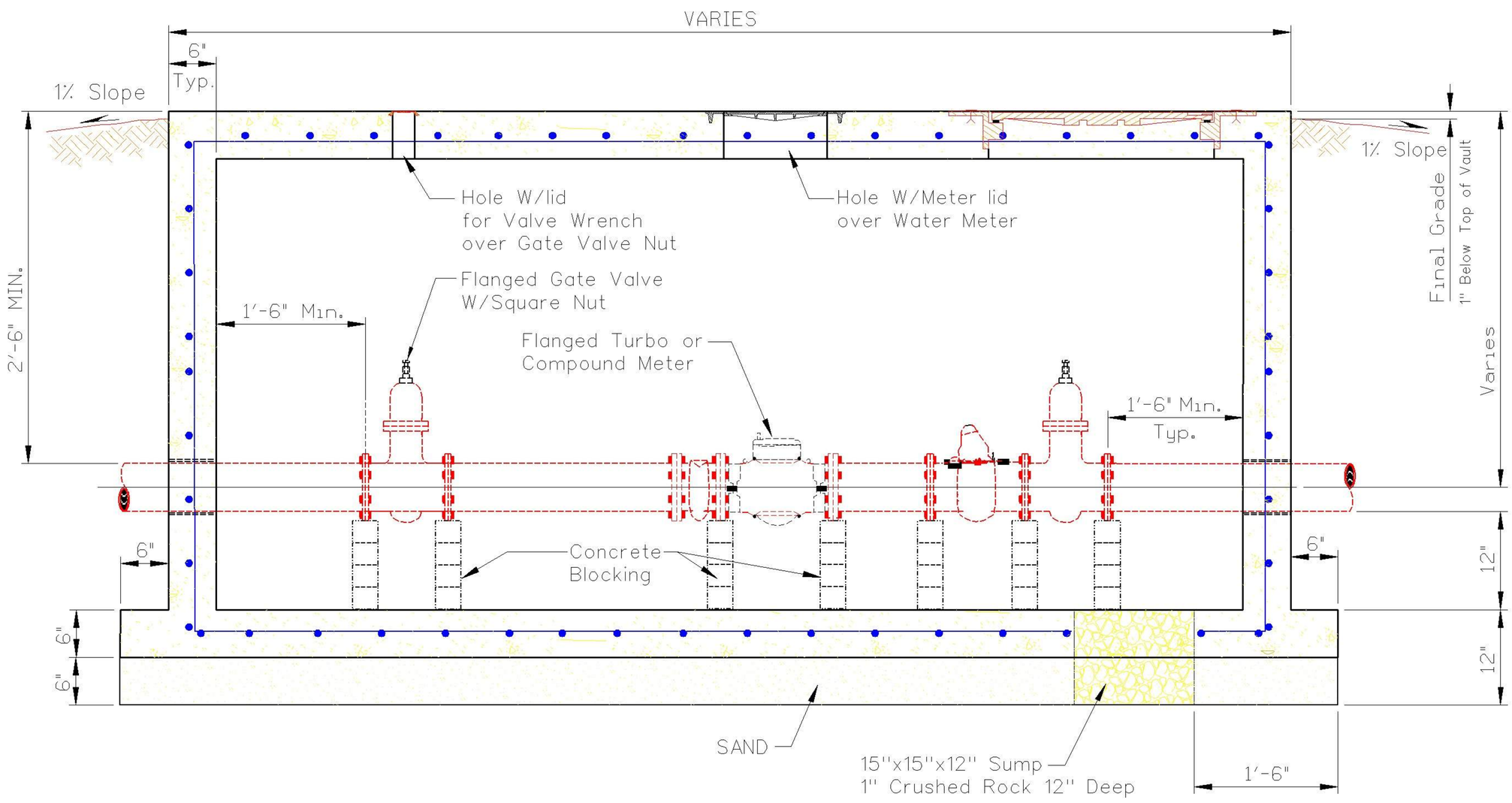

ELEVATION

NOTES:

1. A minimum clearance of 18" from the body or flanges of waterline valves and other devices to the inside wall of the pit except as shown or noted.
2. Vault to be constructed of Class A Concrete as per ODOT Section 701 with a minimum 28-day compressive strength of 3000 PSI.
3. Reinforcing Steel shall be grade 60, #4 Bars at 8" Centers.
4. Floor, Walls & Top may be poured separate with the use of Steel ties at all construction joints.
5. Vault to be located on public property or in a designated utility easement.
6. Manhole lids need to show a confined space warning.
7. If top of water meter is over 30" deep from top of lid, meter will require remote reading systems, this will eliminate the confined space entry permit required to read the meter.
8. Alternate designs shall be reviewed by the Utilities Engineer.

WATER METER VAULT

City Engineer Approval:		CITY OF NORMAN, OKLAHOMA	
Approval Date:	Revision Date: 6-8-2006	Rev. No. 0	DRAWING NO. W 16