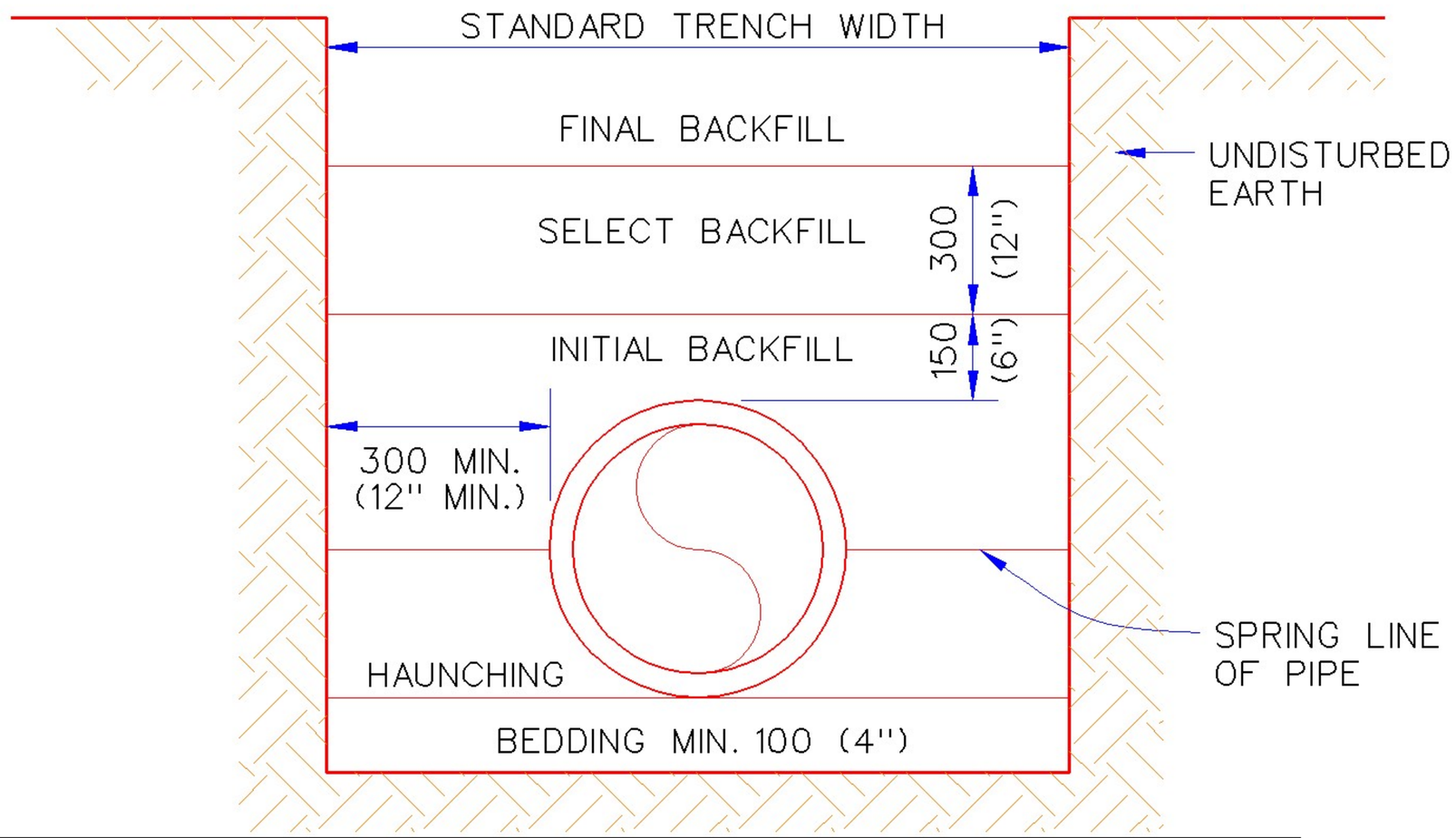

BEDDING MATERIALS

BACKFILL DESCRIPTION	NON-PAVED AREAS			PAVED AREAS (See Note 9)		
	CORRUGATED		CONCRETE	CORRUGATED		CONCRETE
	ALUMINUM	STEEL		ALUMINUM	STEEL	
FINAL BACKFILL	EXCAVATED MATERIAL	EXCAVATED MATERIAL	EXCAVATED MATERIAL	SBM	SBM	SBM
SELECT BACKFILL	EXCAVATED MATERIAL	EXCAVATED MATERIAL	EXCAVATED MATERIAL	SBM	SBM	SBM
INITIAL BACKFILL	SAND	SAND	SELECT FILL	SBM	SBM	SBM
HAUNCHING	SBM	SBM	SELECT FILL	SBM	SBM	SBM
BEDDING	SEE NOTE 5			SEE NOTE 5		

NOTES:

1. INSTALLATION AND BACK FILLING SHALL MEET MANUFACTURERS RECOMMENDATIONS.
2. SELECT FILL CONSISTS OF EXCAVATED MATERIALS CONTAINING NO MATERIAL LARGER THAN 50 MM (2") DIAMETER.
3. STANDARD BEDDING MATERIAL (SBM) SHALL CONFORM TO ODOT 703.01, TYPE A AGGREGATE BASE OR FLOWABLE FILL PER SECTION 501.02(B).
4. COMPACTION REQUIREMENTS:
   a. NON-PAVED AREAS: 90% MAXIMUM STANDARD PROCTOR DENSITY FOR COHESIONLESS SOILS AND 85% FOR COHESIVE SOILS.
   b. PAVED AREAS: 95% MAXIMUM STANDARD PROCTOR DENSITY FOR COHESIONLESS SOILS.
5. IF TRENCH IS DRY BEDDING SHALL BE 100 MM (4") SAND OR TYPE A AGGREGATE BASE, AND IF WET SHALL BE NO. 57 OR NO. 67 ROCK PER SECTION 701.06(C).
6. NO WATER JETTING ALLOWED.
7. IN SANDY NON-PAVED AREAS, SAND CAN BE USED FOR ALL BACKFILL.
8. FOR CONCRETE PIPE IN NON-PAVED AREAS, SAND CAN BE USED FOR ALL BACKFILL IF THE CONCRETE PIPE USES RUBBER O-RING JOINTS.
9. THE BACKFILL MATERIAL SHALL EXTEND A MINMUM OF 2-FEET BEHIND THE BACK OF CURB, OR THE EDGE OF PAVEMENT WHERE NO CURB EXISTS.

METRIC UNITS ARE IN MM WITH ENGLISH UNITS IN PARENTHESIS, UNLESS INDICATED OTHERWISE.

STORM SEWER PIPE TRENCHING AND BEDDING

City Engineer Approval:		CITY OF NORMAN, OKLAHOMA	
Approval Date:	Revision Date: 12-29-2003	Rev. No. 5	DRAWING NO. SD 01

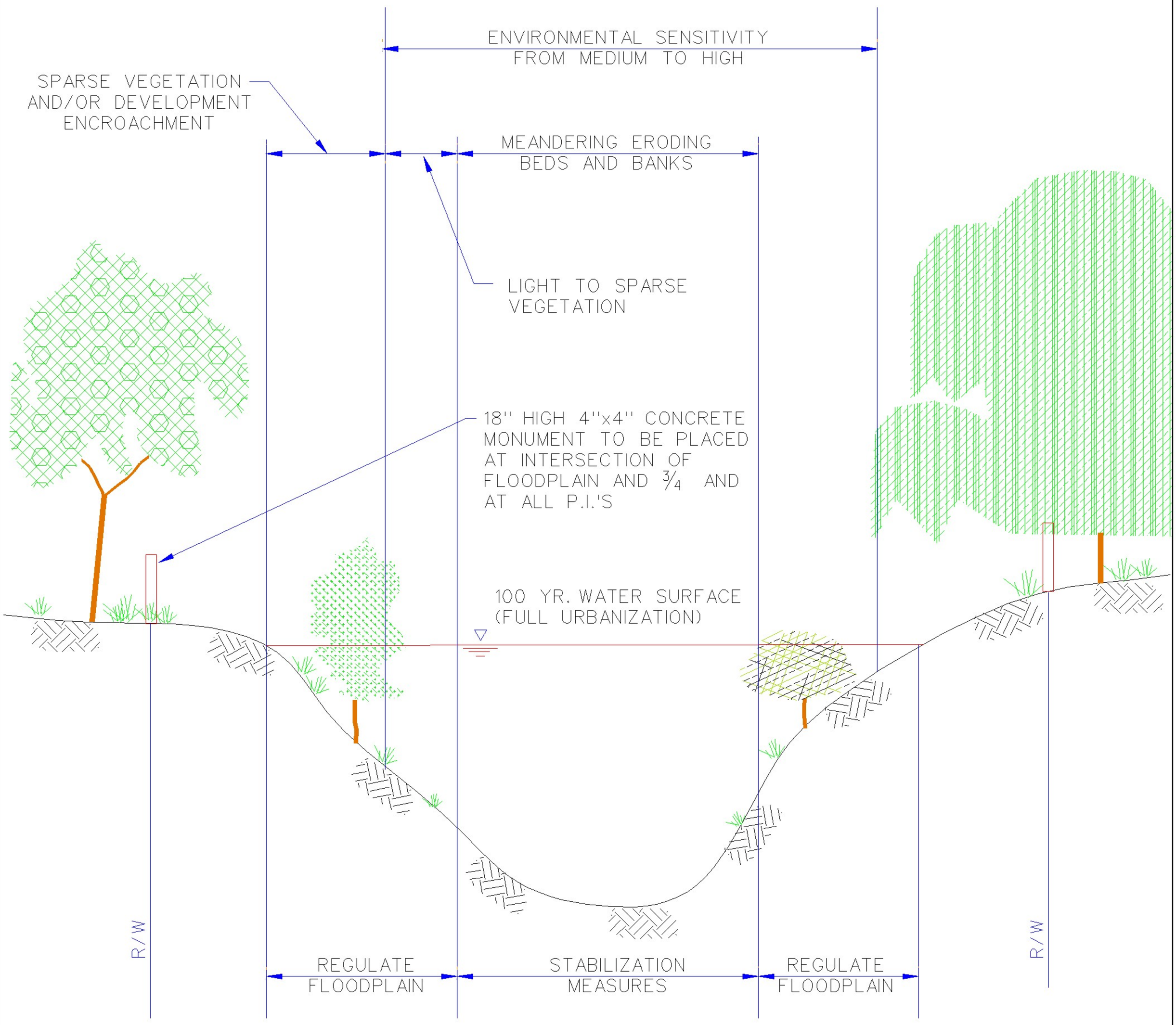

NOTES:

1. STABILIZATION MEASURES INCLUDE CHECK STRUCTURES, RIPRAP, MINOR GRADING, SHORT SECTIONS OF RETAINING WALLS.
2. GENERALLY LITTLE OR NO CAPACITY IMPROVEMENTS ARE INCLUDED - ONLY STABILIZATION AND FLOODPLAIN REGULATIONS.
3. ALL BRUSH AND TREES UNDER 4" DIAMETER MAY BE REMOVED.
4. WHERE FLOODPLAIN IS LESS THAN 150' THE R.O.W. REQUIRED SHALL BE THE FLOODPLAIN WIDTH PLUS 15' (MIN.) EACH SIDE OF FLOODPLAIN FOR MAINTENANCE ACCESS.

NATURAL CHANNEL

City Engineer Approval:		CITY OF NORMAN, OKLAHOMA	
Approval Date:	Revision Date:	Rev. No. 0	DRAWING NO. SD 02

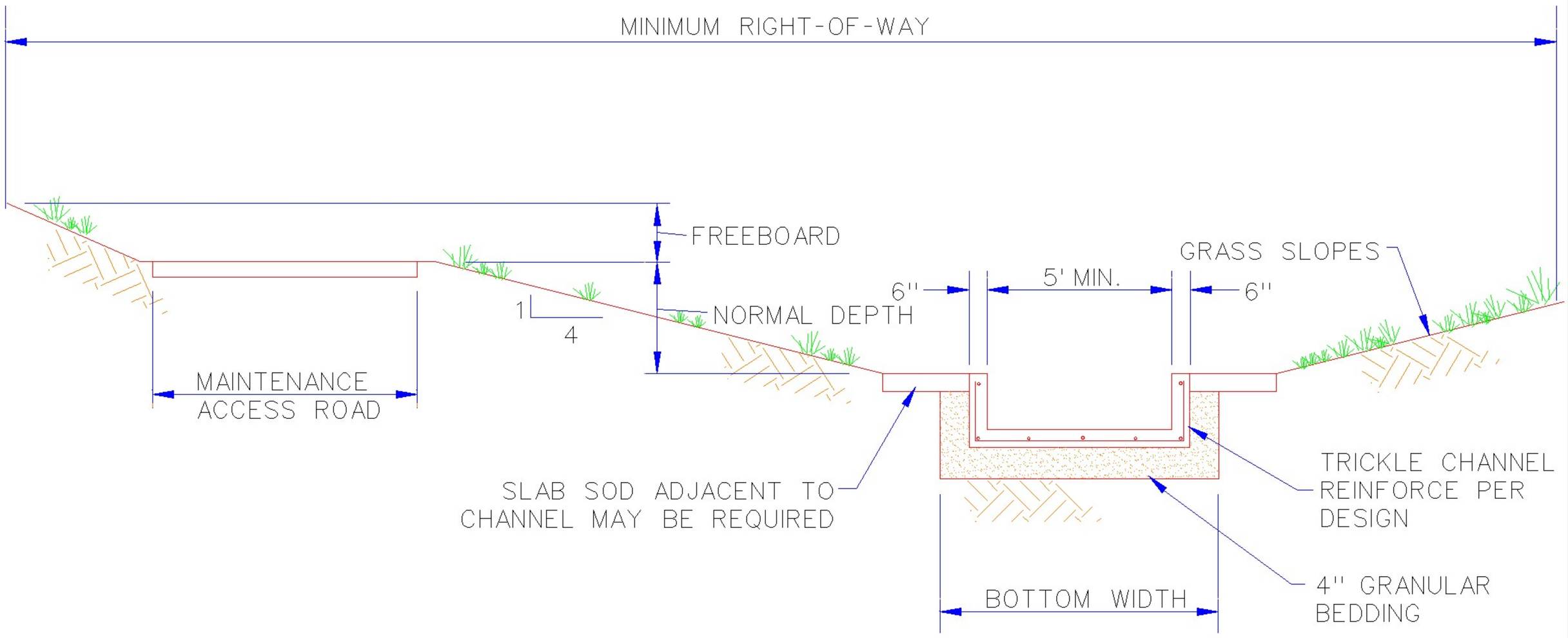

NOTES:

1. BOTTOM WIDTH: CONSISTENT WITH MAXIMUM ALLOWABLE DEPTH AND VELOCITY REQUIREMENTS. SHALL NOT BE LESS THAN TRICKLE CHANNEL WIDTH.
2. TRICKLE CHANNEL: MINIMUM CAPACITY TO BE 1% TO 3% OF 100 YEAR FLOW, BUT NOT LESS THAN 1 cfs. CHANNEL TO BE CONSTRUCTED OF CONCRETE OR OTHER APPROVED MATERIALS.
3. FREEBOARD: FREEBOARD TO BE 300mm (1') MINIMUM.
4. MAINTENANCE/ACCESS ROAD: MINIMUM WIDTH TO BE 3m (10').
5. R/W WIDTH: MINIMUM WIDTH TO INCLUDE FREEBOARD AND MAINTENANCE ACCESS ROAD.
6. CHANNEL SIDE SLOPE: MAXIMUM SIDE SLOPE FOR GRASS-LINED CHANNELS TO BE 4:1.
7. THE MAXIMUM FLOW VELOCITY TO BE 7 fps FOR EROSION RESISTANT SOILS OR 5 fps FOR SANDY SOILS.

GRASS LINED CHANNEL, TYPE A

City Engineer Approval:		CITY OF NORMAN, OKLAHOMA	
Approval Date:	Revision Date:	Rev. No. 0	DRAWING NO. SD 03

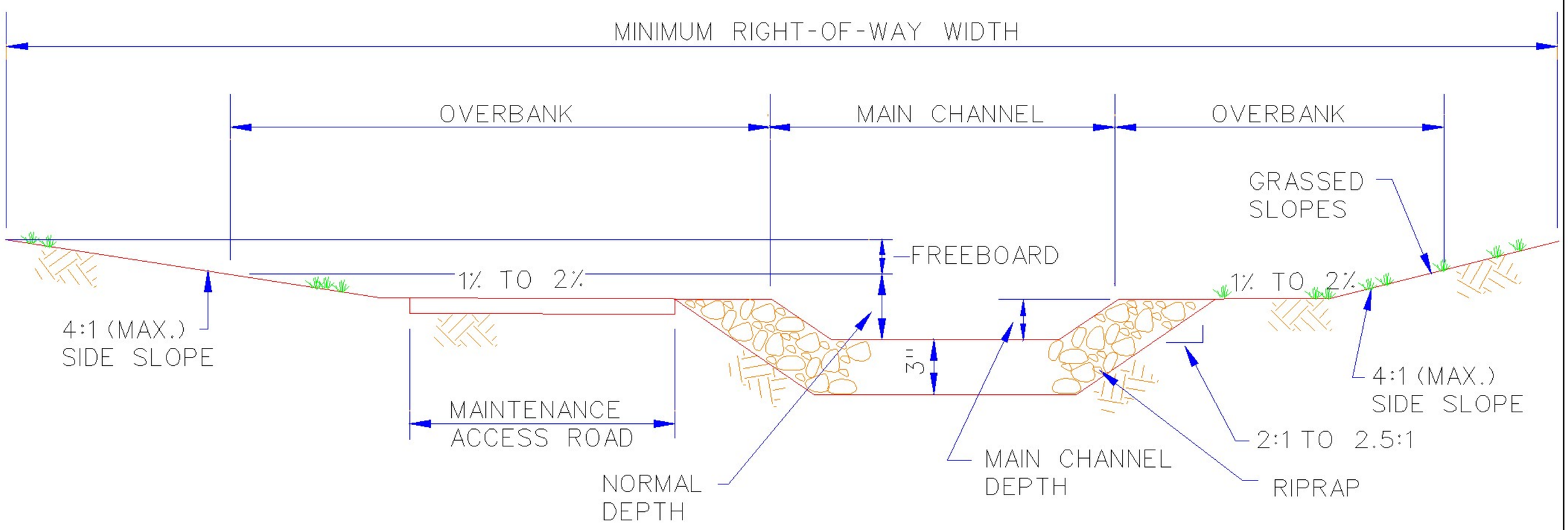

NOTES:

1. THIS SECTION IS REQUIRED FOR CHANNELS WITH SANDY SOILS.
2. MAIN CHANNEL: CAPACITY TO BE FROM 2 YEAR TO THE 5 YEAR. MAXIMUM 100 YEAR FLOW VELOCITY IS 5 fps. PROTECT SLOPES WITH RIPRAP. USE A MANNINGS n VALUE OF 0.03 FOR HYDRAULIC CALCULATIONS.
3. NORMAL DEPTH: FLOW DEPTH FOR 100 YEAR FLOW SHALL NOT EXCEED 1.5m (5'), NOT INCLUDING THE MAIN CHANNEL DEPTH.
4. FREEBOARD: FREEBOARD TO BE A MINIMUM OF 300mm (1').
5. MAINTENANCE/ACCESS ROADS: MINIMUM WIDTH TO BE 3m (10'). COUNTY MAY REQUIRE ALL OR PART OF THE ROAD TO BE SURFACED.
6. R/W WIDTH: MINIMUM WIDTH TO INCLUDE FREEBOARD AND MAINTENANCE/ACCESS ROAD.
7. OVERBANK: FLOW IN EXCESS OF MAIN CHANNEL TO BE CARRIED IN THIS AREA. AREA MAY BE USED FOR RECREATIONAL PURPOSES.

GRASS LINED CHANNEL, TYPE B

City Engineer Approval:		CITY OF NORMAN, OKLAHOMA	
Approval Date:	Revision Date:	Rev. No. 0	DRAWING NO. SD 04

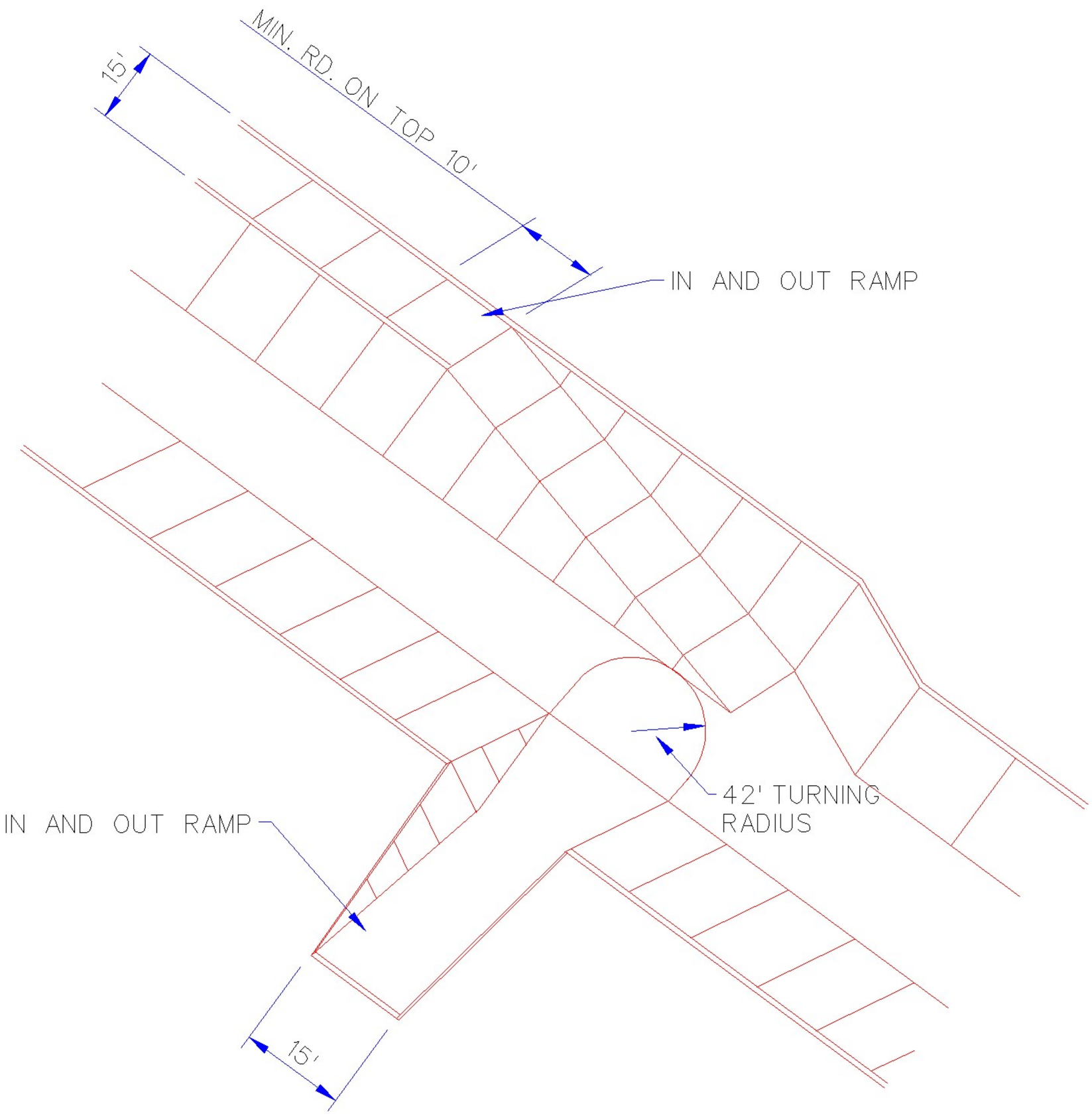

NOTES:
1. ALL RAMPS SHALL HAVE A MAXIMUM SLOPE OF 4:1 WITH 25mm (1") CORRUGATIONS IN ROADWAY.
2. MAXIMUM SPACING ON RAMPS SHALL BE 180m (600') WITH A MINIMUM OF 2 RAMPS BETWEEN RESTRICTIVE STRUCTURES.
3. ALL RAMPS ARE TO BE FENCED AND LOCKED. GATE LOCKS TO BE FURNISHED BY THE CITY.
4. MINIMUM TURNING RADIUS AT THE OUTSIDE WHEEL SHALL BE 12.6m (42') FOR ENTRANCE AND EXIT.

RAMP FOR CONCRETE LINED CHANNEL

City Engineer Approval:		CITY OF NORMAN, OKLAHOMA	
Approval Date:	Revision Date:	Rev. No. 0	DRAWING NO. SD 05

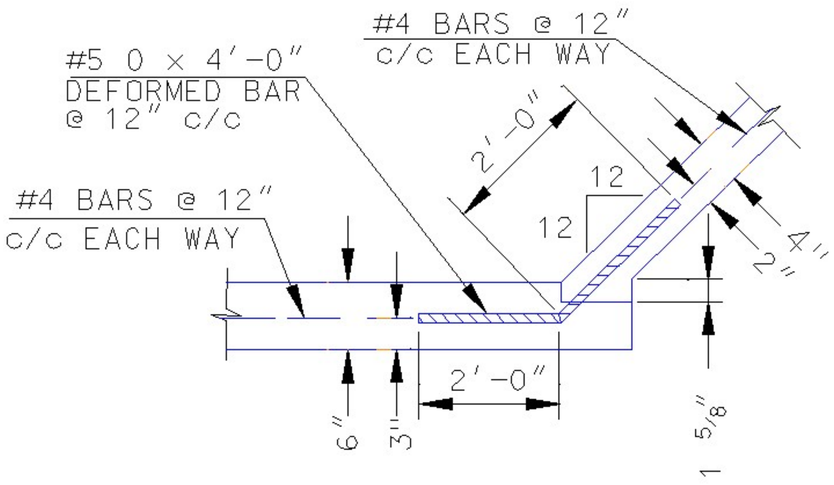

LONGITUDINAL CONSTRUCTION JOINT
FOR 6" BOTTOM & 4" SIDE WALLS
4" WALLS FOR DEPTHS OF 0' TO 5'

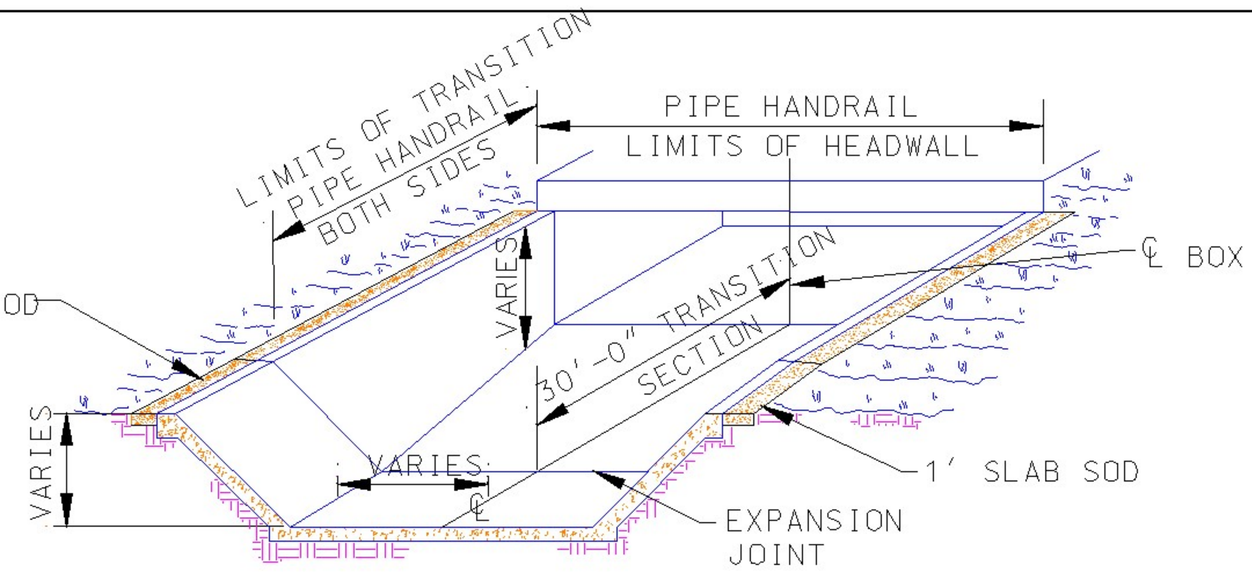

ELEVATION OF CONCRETE CHANNEL LINER

30' TRANSITION TO R.C. BOXES
VERTICAL TO 1:1 SIDESLOPE

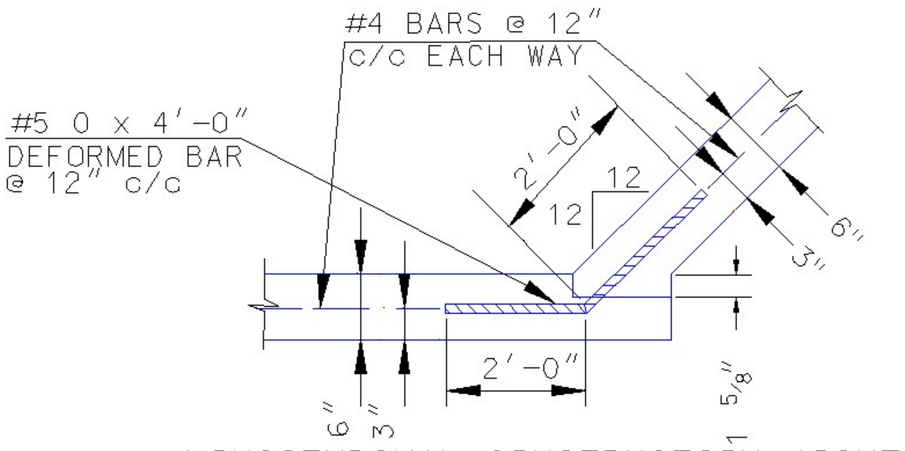

LONGITUDINAL CONSTRUCTION JOINT
FOR 6" BOTTOM & 6" SIDE WALLS
6" WALLS FOR DEPTHS OF 0' TO 5'

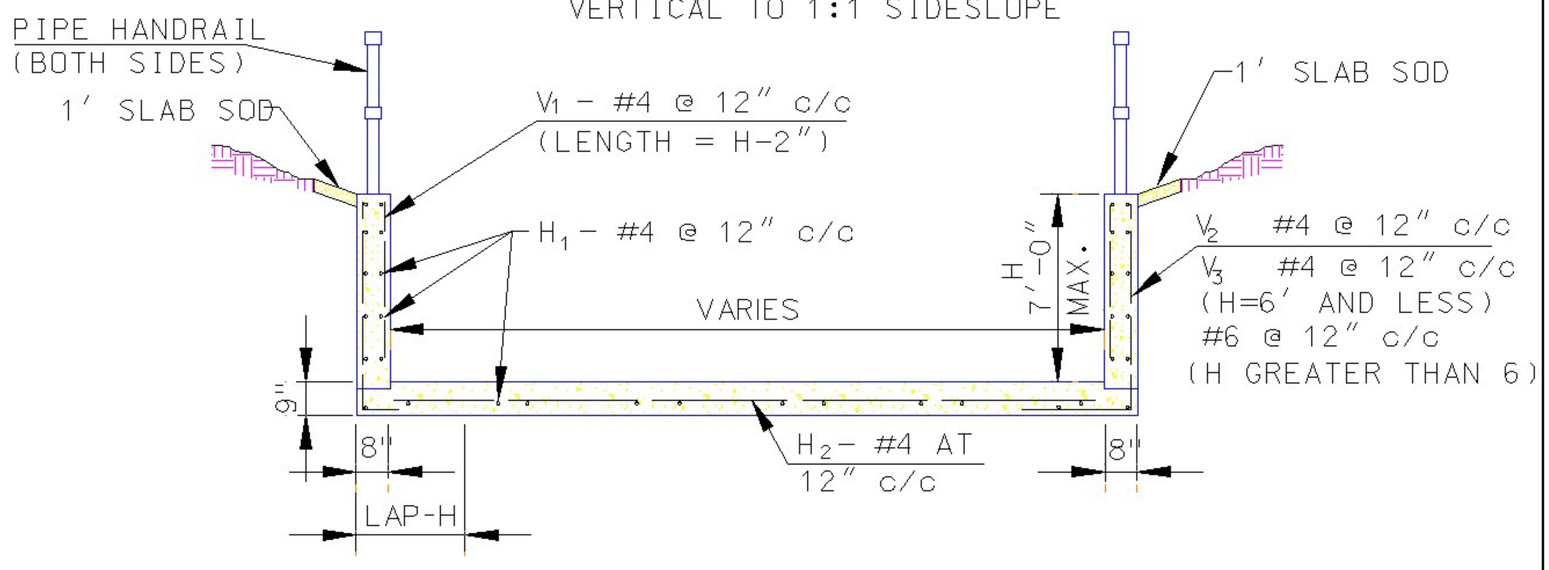

TYPICAL THROUGH TRANSITION SECTION
ODOT TYPE II-C RETAINING WALL SECTION (MODIFIED)

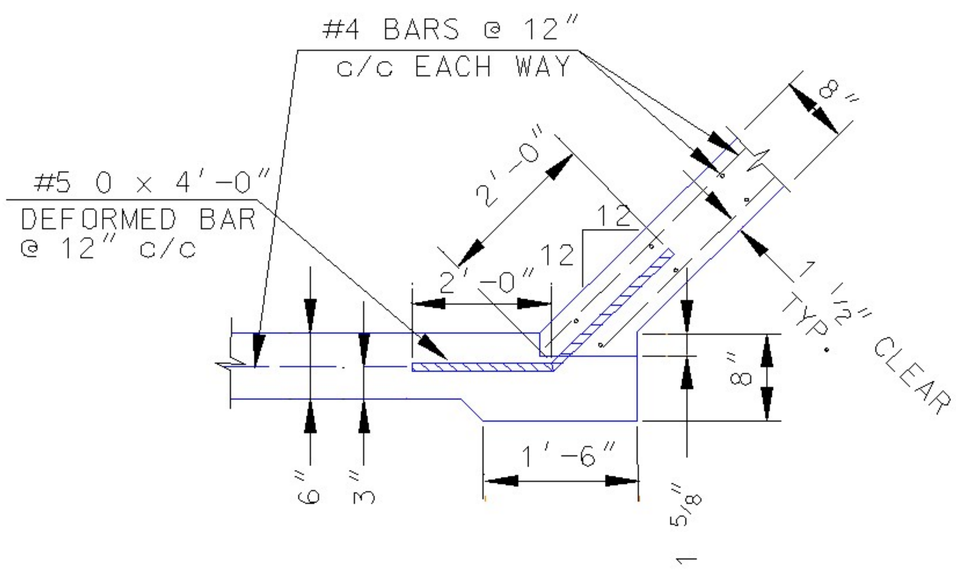

LONGITUDINAL CONSTRUCTION JOINT
FOR 6" BOTTOM & 6" SIDE WALLS
8" WALLS FOR 2/3 THE WALL HEIGHT FOR CHANNELS ABOVE 5'

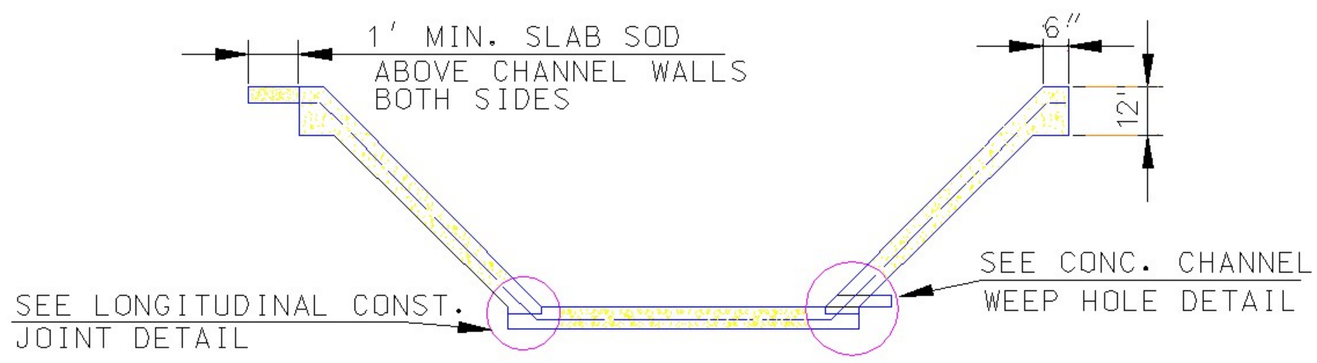

TYPICAL CONCRETE CHANNEL LINER DETAIL

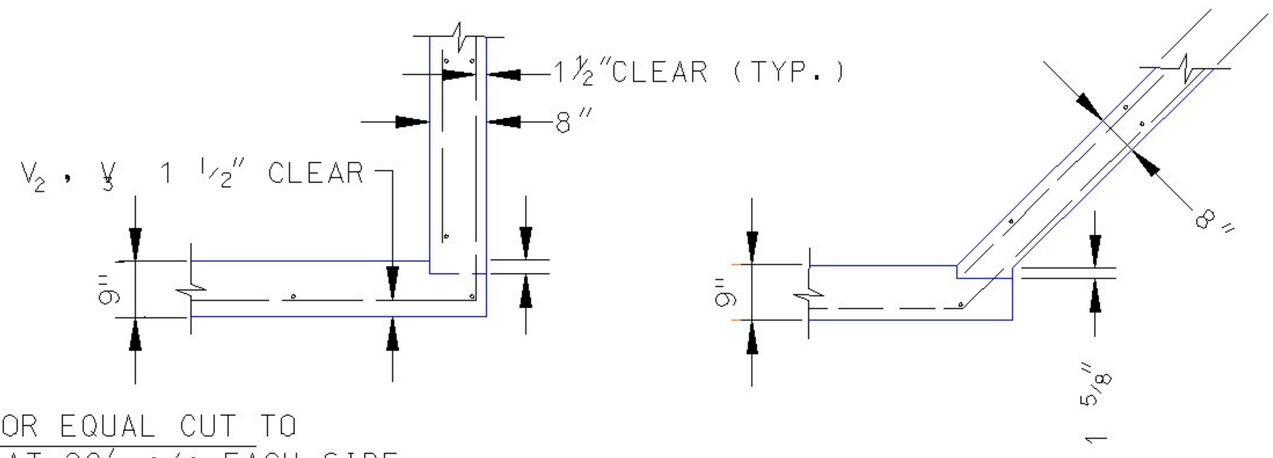

LONGITUDINAL CONSTRUCTION JOINT
THROUGH TRANSITION SECTION

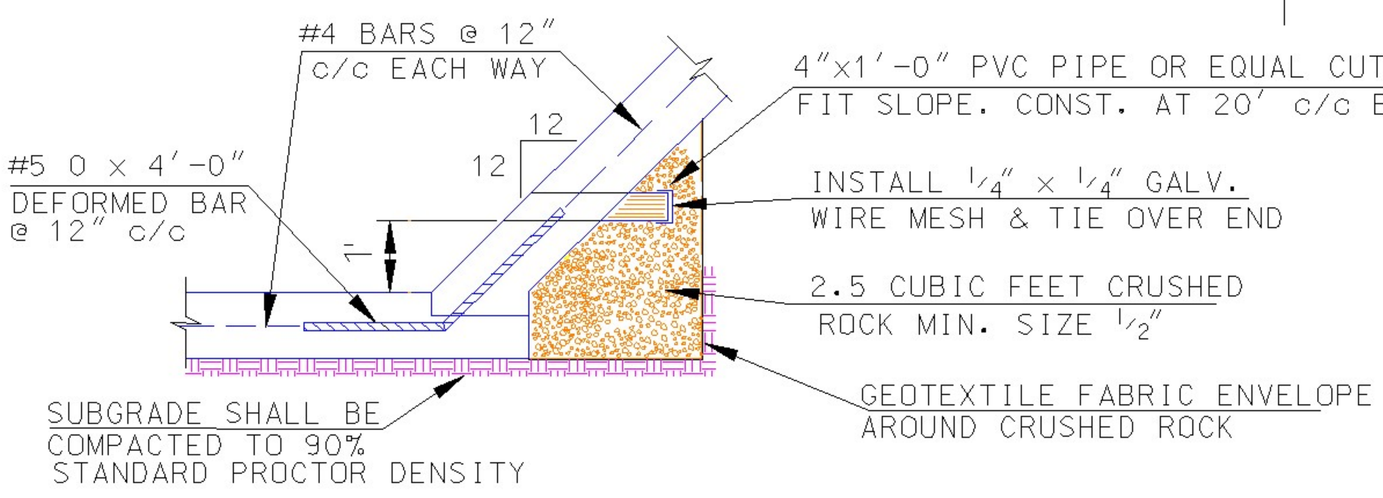

CONCRETE CHANNEL WEEP HOLE DETAIL

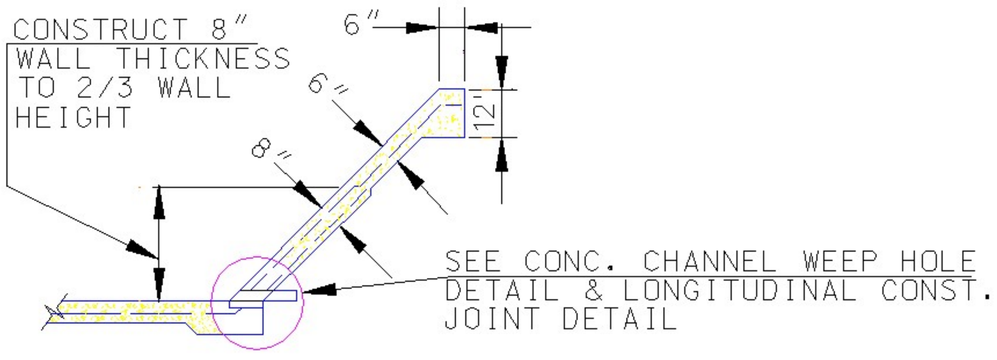

TYPICAL CONCRETE CHANNEL LINER DETAIL
FOR WALL HEIGHT ABOVE 5'

CONCRETE CHANNEL LINER & DETAILS

City Engineer Approval:		CITY OF NORMAN, OKLAHOMA	
Approval Date:	Revision Date:	Rev. No. 0	DRAWING NO. SD 06

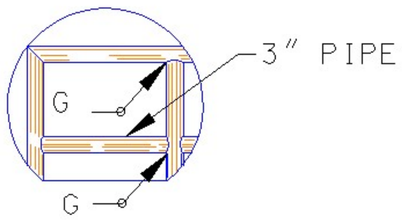

ALTERNATE DETAIL
(USING WELDED CONNECTIONS ON PIPE HANDRAIL)

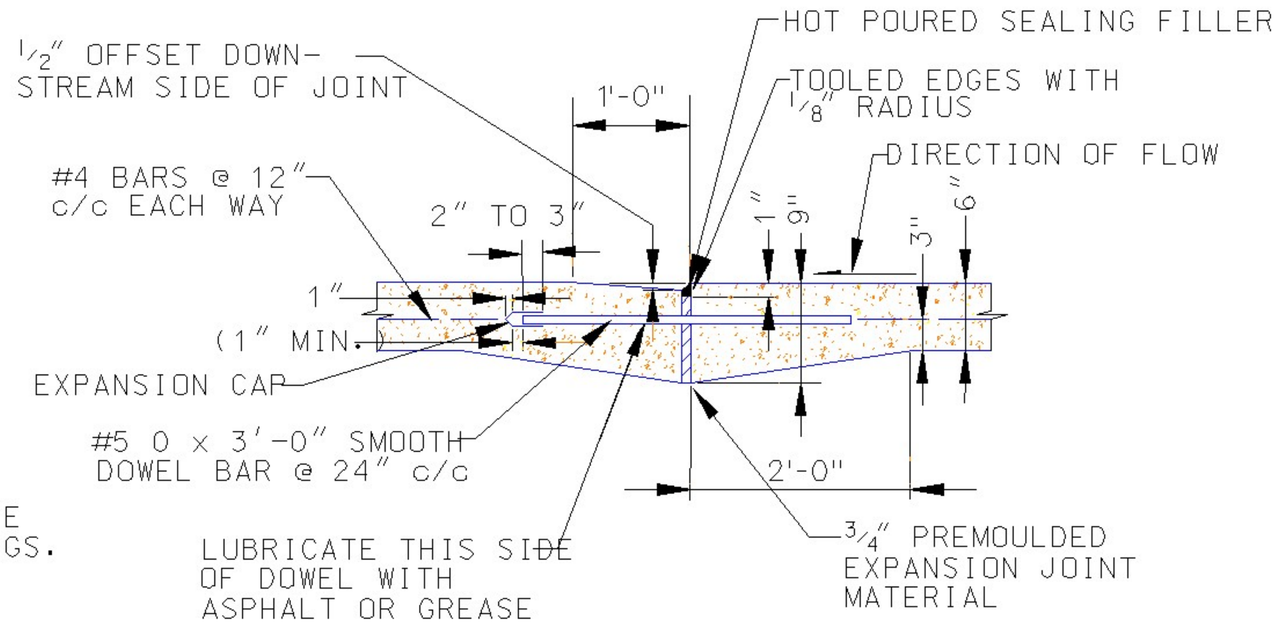

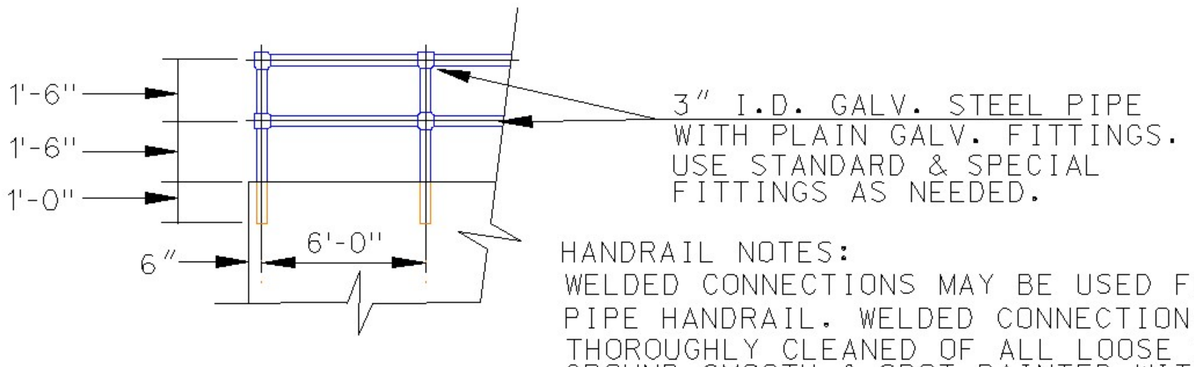

HANDRAIL NOTES:
WELDED CONNECTIONS MAY BE USED FOR PIPE HANDRAIL. WELDED CONNECTIONS SHALL BE THOROUGHLY CLEANED OF ALL LOOSE SCALE, GROUND SMOOTH & SPOT PAINTED WITH TWO COATS OF ALUMINUM PAINT.

PIPE HANDRAIL DETAIL

TYPICAL TRANSVERSE EXPANSION JOINT
SPACED AT 100 FOOT C/C MAX.

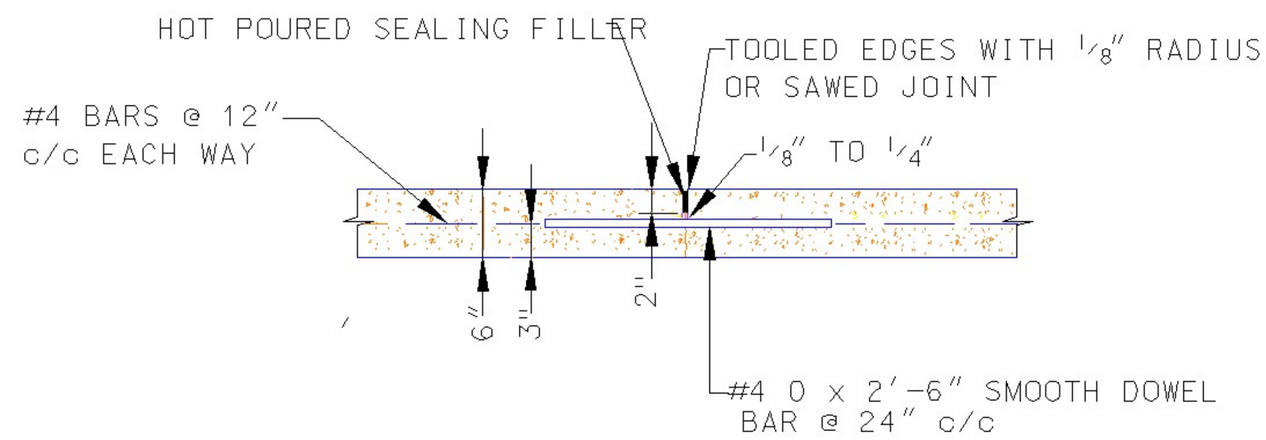

TRANSVERSE DUMMY GROOVE CONTRACTION JOINT
SPACED AT 20 FOOT C/C

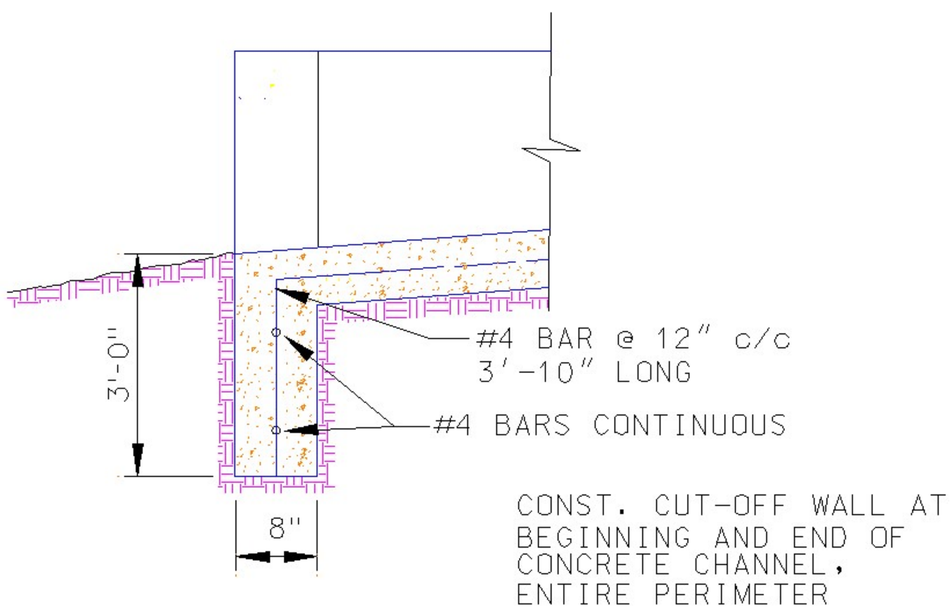

CUT-OFF WALL DETAIL

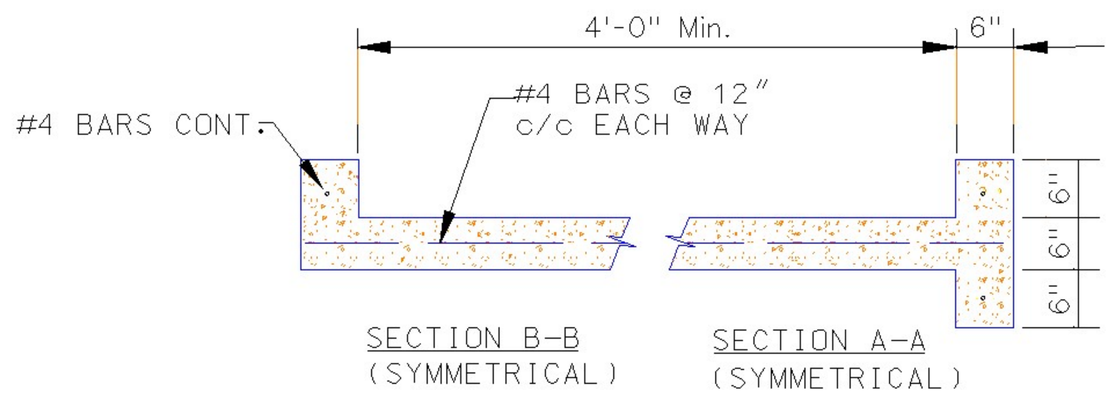

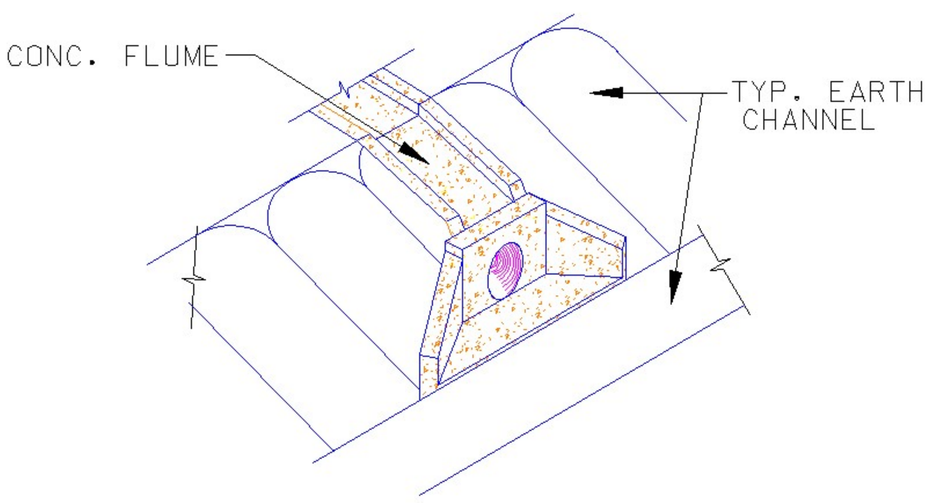

VIEW OF FLUME
AT EARTH CHANNEL

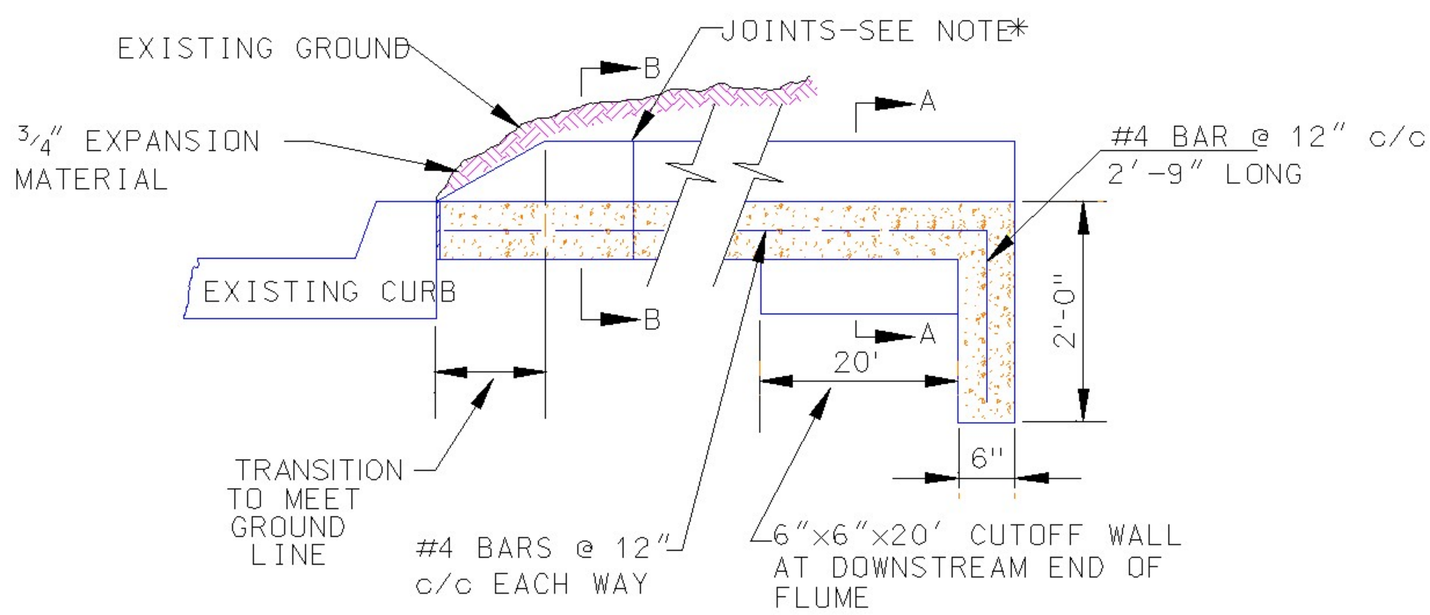

PROFILE

*NOTE:
3/4" EXPANSION JOINT @ 100' MAX.
SAWED CONT. JOINT @ 20' MAX.

CONCRETE FLUME DETAIL

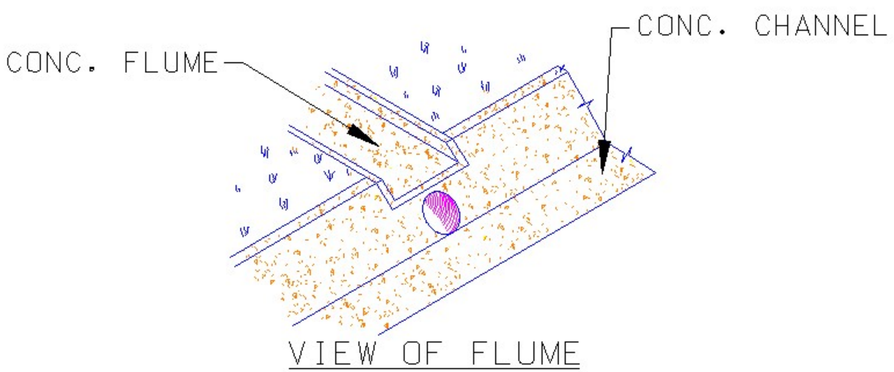

VIEW OF FLUME
AT CONCRETE CHANNEL

FLUME & CHANNEL LINER DETAILS

City Engineer Approval:		CITY OF NORMAN, OKLAHOMA	
Approval Date:	Revision Date:	Rev. No. 0	DRAWING NO. SD 07

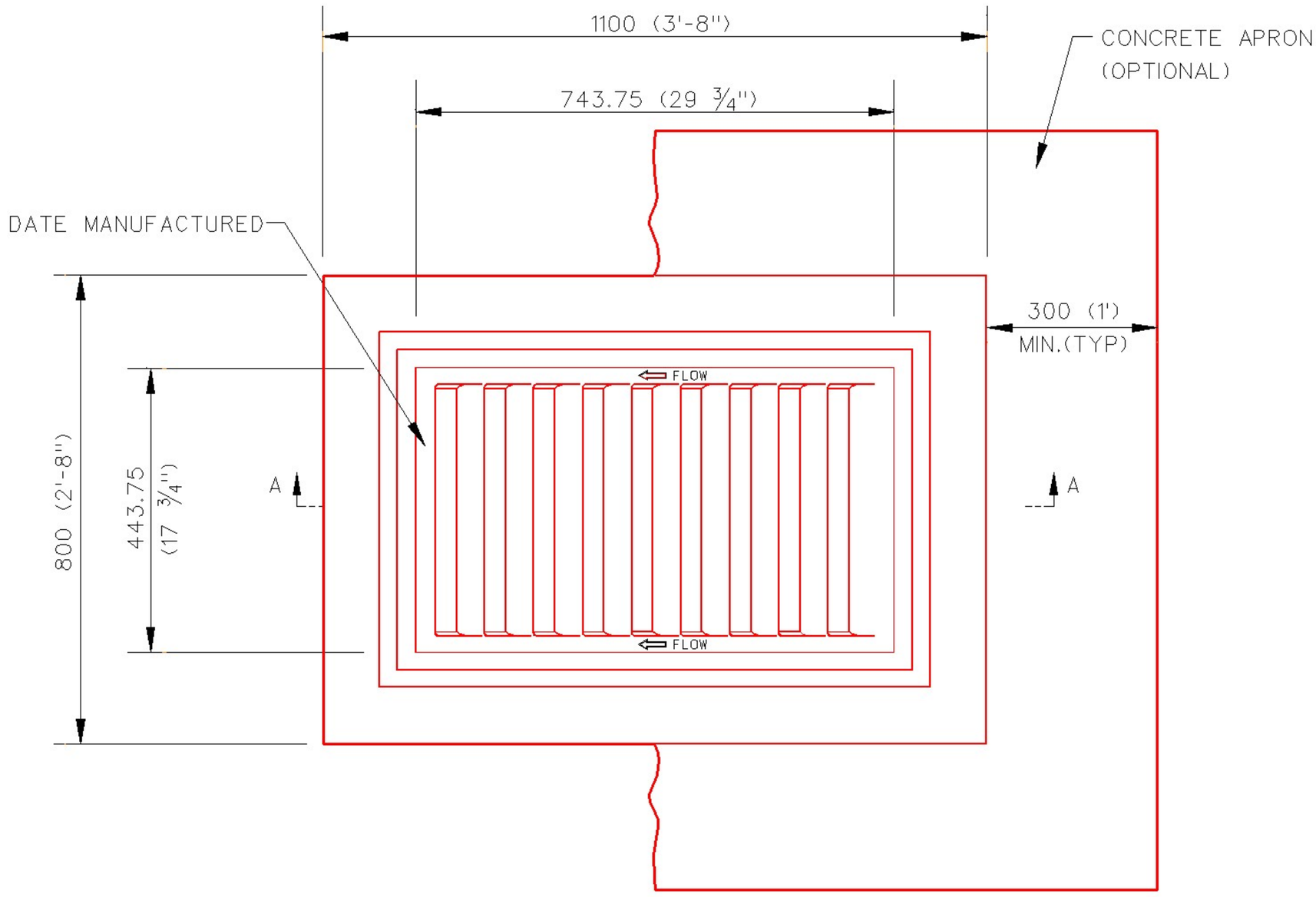

PLAN

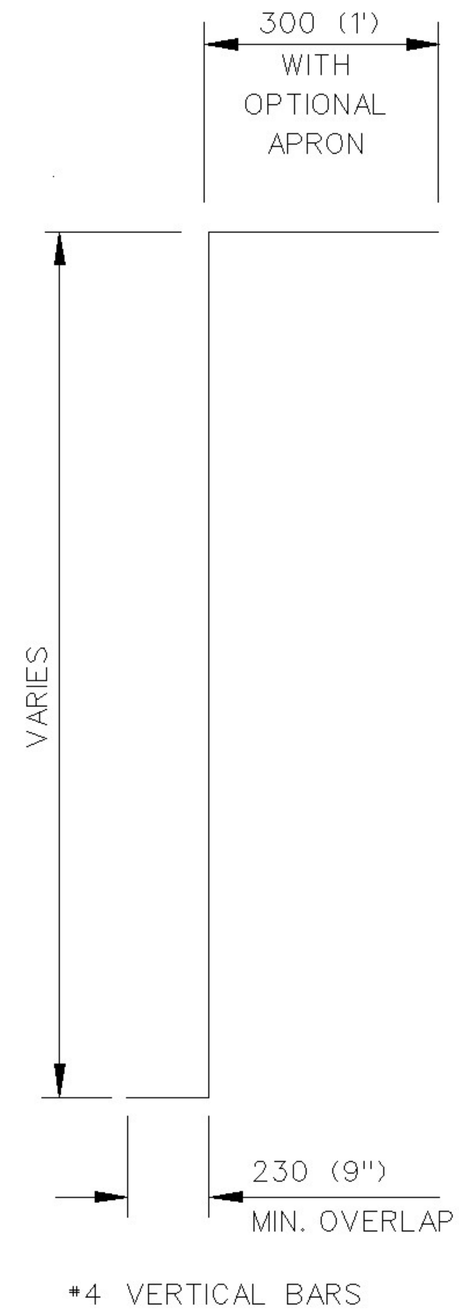

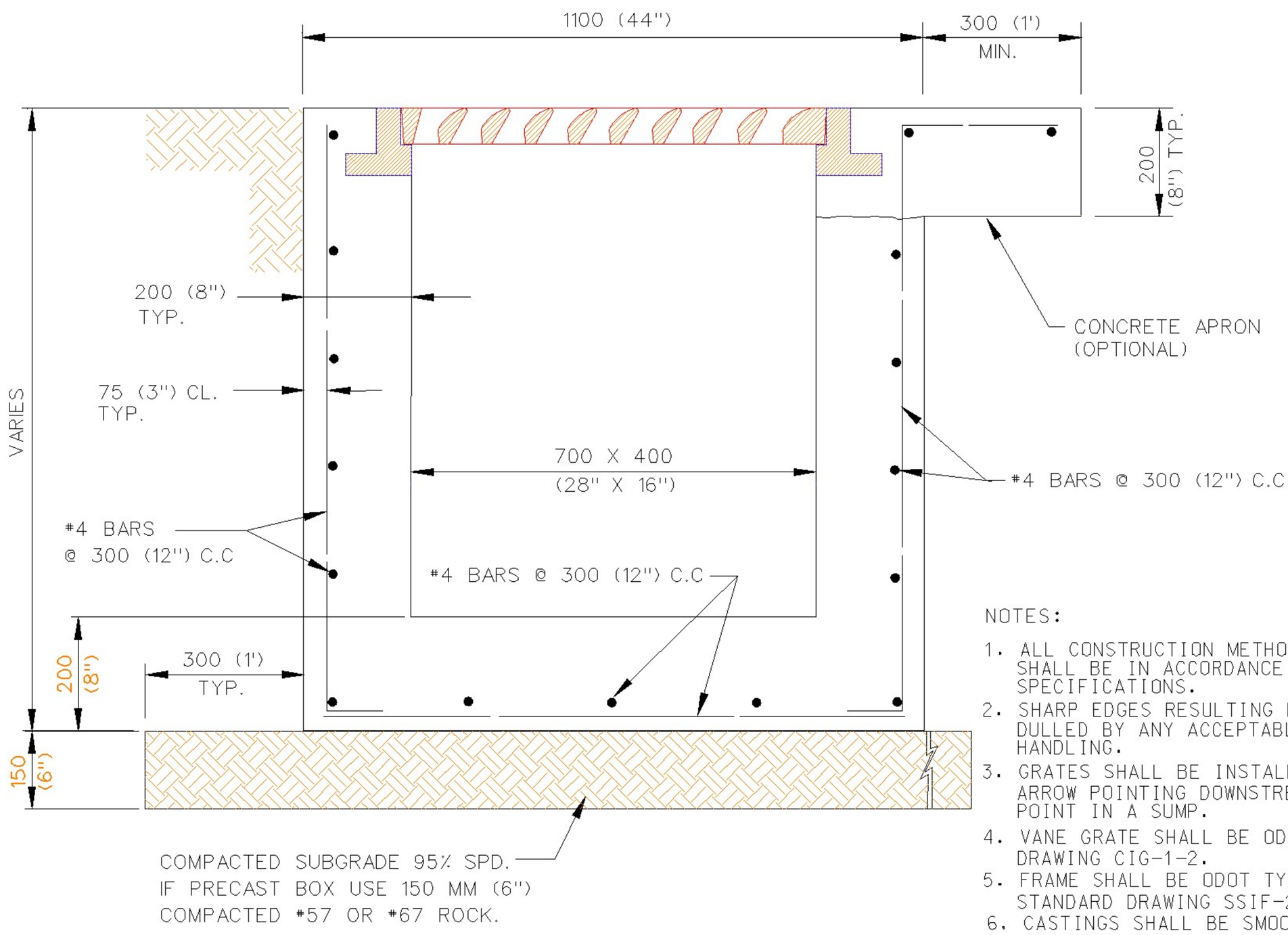

SECTION A-A

NOTES:

1. ALL CONSTRUCTION METHODS & MATERIAL REQUIREMENTS SHALL BE IN ACCORDANCE WITH THE CURRENT SPECIFICATIONS.
2. SHARP EDGES RESULTING FROM FABRICATION SHALL BE DULLED BY ANY ACCEPTABLE METHOD FOR SAFETY IN HANDLING.
3. GRATES SHALL BE INSTALLED IN FRAME WITH FLOW ARROW POINTING DOWNSTREAM OR TOWARD THE LOW POINT IN A SUMP.
4. VANE GRATE SHALL BE ODOT TYPE VG-F, STANDARD DRAWING CIG-1-2.
5. FRAME SHALL BE ODOT TYPE A FOR INLET DESIGN 1, STANDARD DRAWING SSIF-2-4.
6. CASTINGS SHALL BE SMOOTH AND WELL CLEANED BY SHOT BLASTING OR OTHER APPROVED CLEANING.
7. ALL CASTINGS SHALL BE MANUFACTURED TRUE TO PATTERN; COMPONENT PARTS SHALL FIT TOGETHER IN A SATISFACTORY MANNER.
8. ALL LETTERING SHALL BE RECESSED 1.5 MM (1/16").

METRIC UNITS ARE IN MM WITH ENGLISH UNITS IN PARENTHESIS, UNLESS INDICATED OTHERWISE.

AREA INLET

City Engineer Approval:		CITY OF NORMAN, OKLAHOMA	
Approval Date:	Revision Date: 11-20-1997	Rev. No. 1	DRAWING NO. SD 08

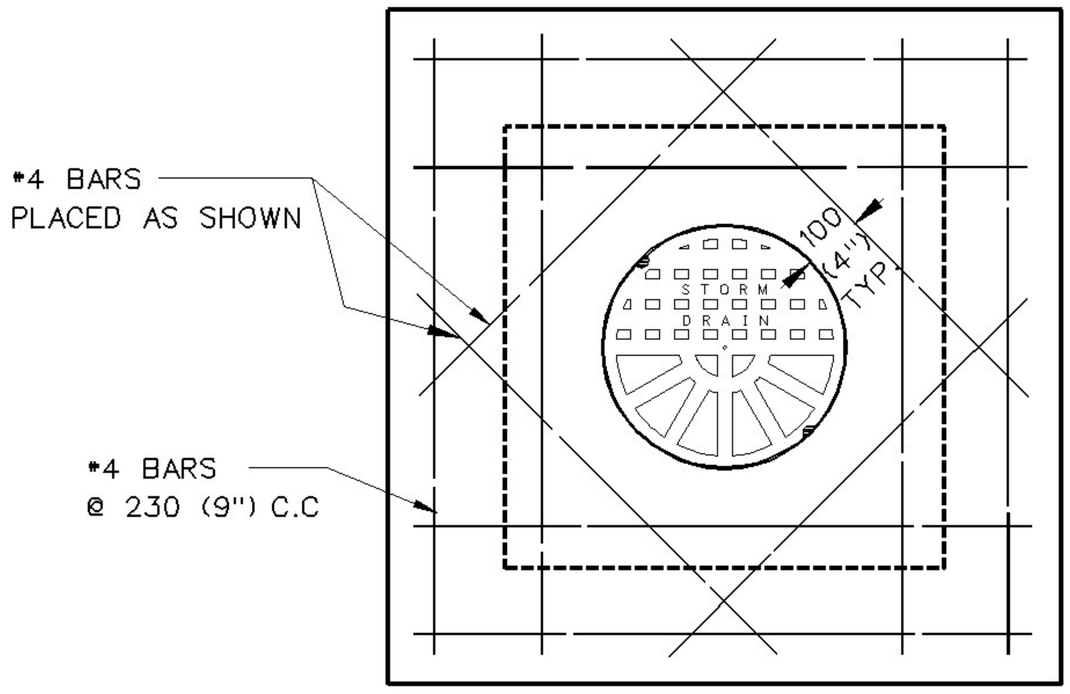

TYPICAL SECTION AT TOP OF BOX

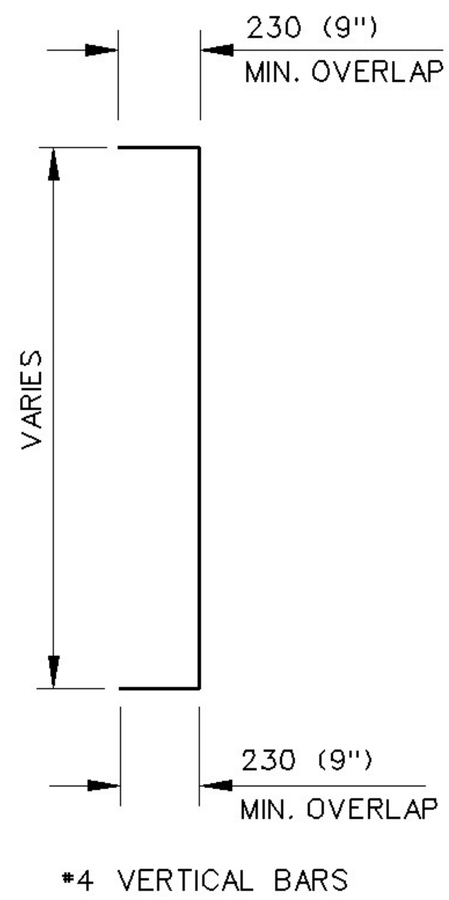

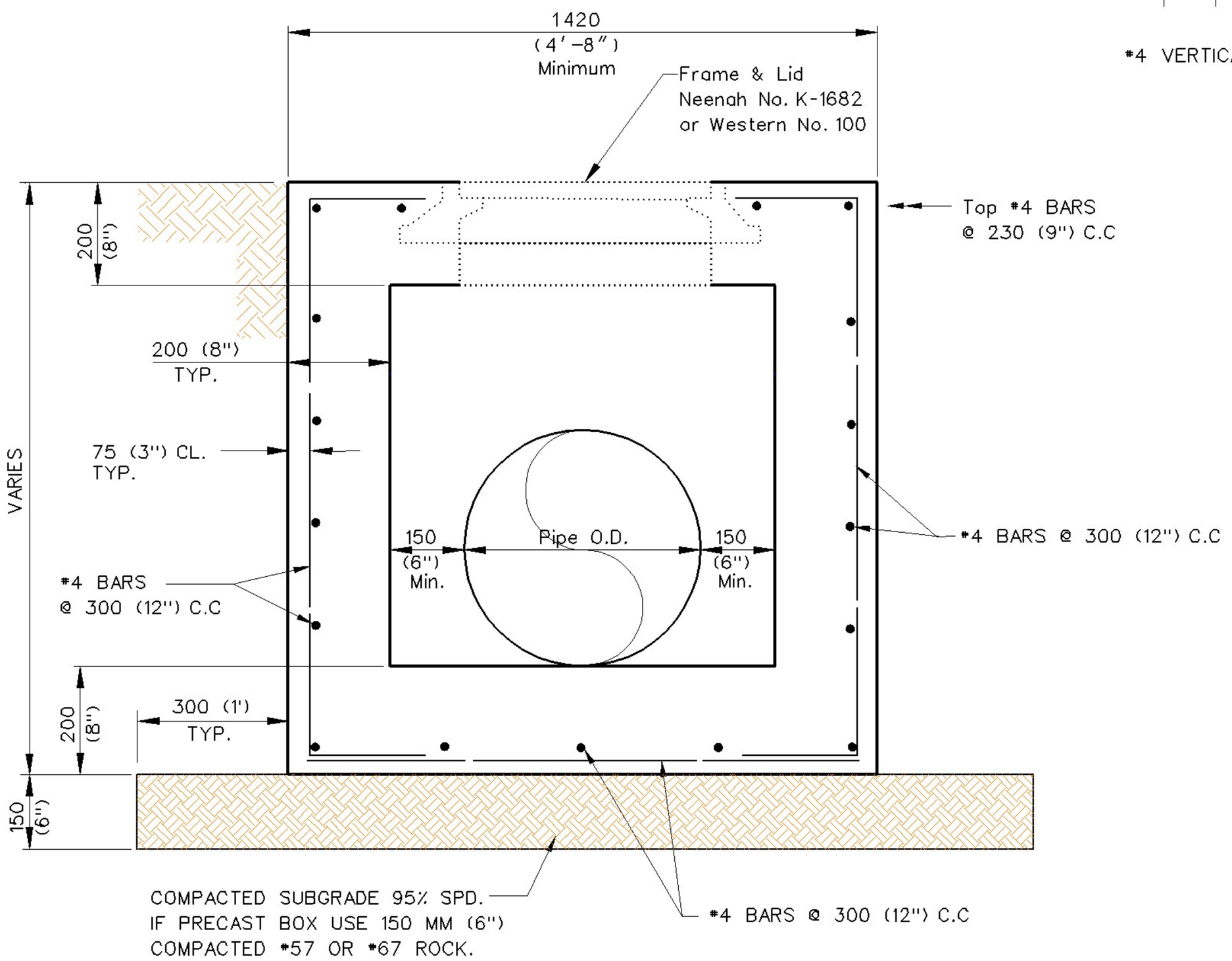

TYPICAL SECTION THRU JUNCTION BOX

NOTES:

1. ALL CONSTRUCTION METHODS & MATERIAL REQUIREMENTS SHALL BE IN ACCORDANCE WITH THE CURRENT SPECIFICATIONS.
2. ALL LETTERING SHALL BE RECESSED 1.5 MM (1/16").

METRIC UNITS ARE IN MM WITH ENGLISH UNITS IN PARENTHESIS, UNLESS INDICATED OTHERWISE.

JUNCTION BOX DETAIL

City Engineer Approval:		CITY OF NORMAN, OKLAHOMA	
Approval Date:	Revision Date:	Rev. No. 0	DRAWING NO. SD 09

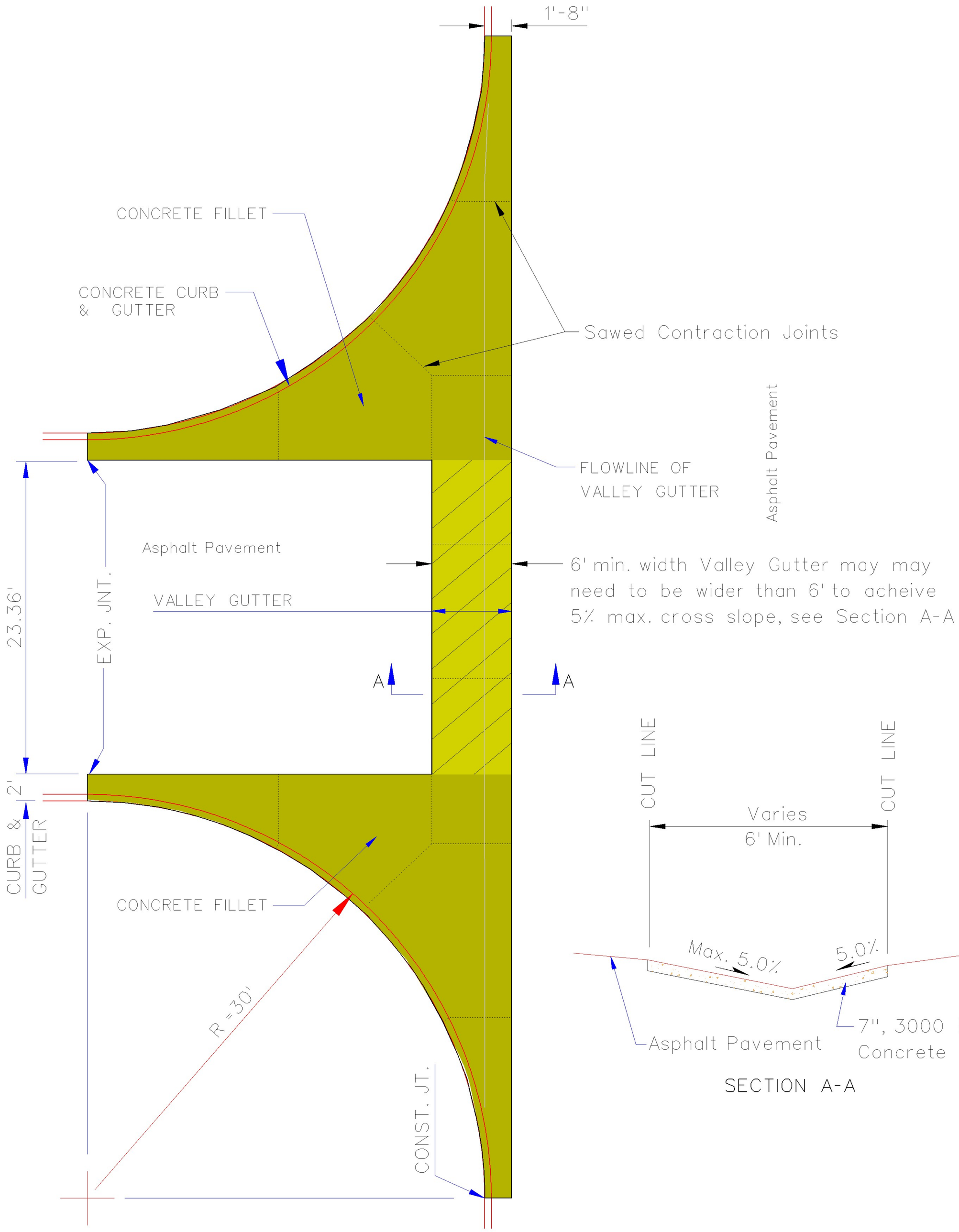

NOTES:

1. REINFORCING STEEL: THE VALLEY GUTTER AND FILLET SHALL HAVE #4 REBAR EACH WAY @ 18" CENTERS.
2. FOR 7" THICK CONCRETE, THE MAXIMUM SPACING FOR SAWED CONTRACTION JOINTS SHALL BE 14 FEET. ALL JOINTS SHALL BE SEALED PER SPECIFICATION. POLYURETHANE SEALANT MAY BE USED.
3. WHEN A CONCRETE VALLEY GUTTER IS REQUIRED, THE CONCRETE FILLET ADJACENT TO THE CURB RETURN SHALL ALSO BE CONSTRUCTED.

CONCRETE VALLEY GUTTER DETAIL

City Engineer Approval:		CITY OF NORMAN, OKLAHOMA	
Approval Date:	Revision Date: 4-24-06	Rev. No. 0	DRAWING NO. SD-10