APPLY TOP COAT OF ASPHALT TO EXISTING PARKING LOT PER PHASE I PLANS AS PART OF PROJECT IMPROVEMENTS

ALL PAVEMENT IS STANDARD DUTY UNLESS NOTED ON PLANS

IF EXIST PAVING THICKNESS IS GREATER THAN SHOWN MATCH EXISTING

NOTE: FOR REINFORCED CONCRETE PAVEMENT USE EVAPORATION REDUCER (MONOMOLECULAR FILM) RE: SPECS

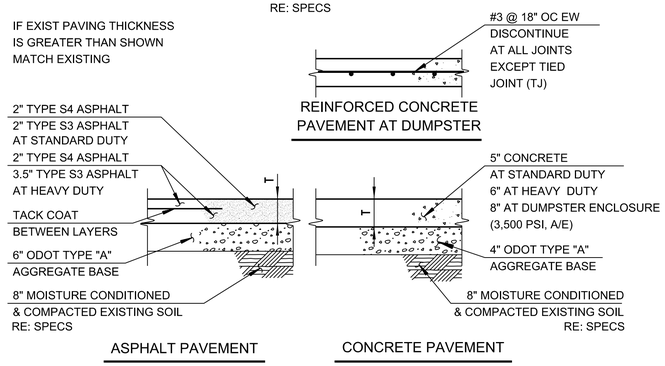

1 PAVEMENT DETAIL
SCALE: NTS

RE: PAVEMENT DETAIL FOR THICKNESS "T"

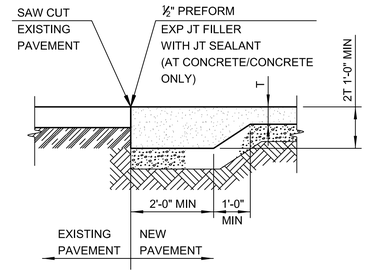

2 PAVEMENT TRANSITION
SCALE: NTS

NOTE: IF ADJACENT PAVING IS CONCRETE CONTRACTOR MAY PLACE "INTEGRAL CURB"

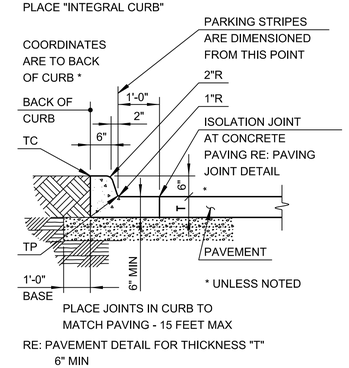

3 CURB AND GUTTER (BARRIER)
SCALE: NTS

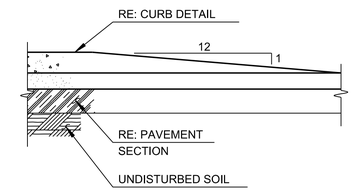

4 CURB TERMINATION
SCALE: NTS

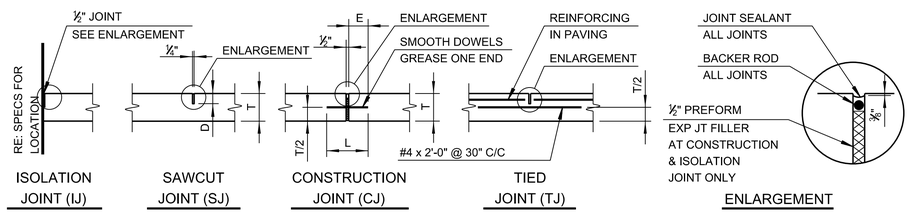

JOINTS NOT SHOWN OTHERWISE SHALL BE SAW JOINTS. SAW JOINTS SHALL BE MADE WITHIN 10 HOURS AFTER CONCRETE POUR.

CONCRETE PAVING JOINT SPACING SEE SCHEDULE

ALL DOWELS & BARS TO BE EPOXY COATED

"T" PAVEMENT THICKNESS	DOWEL DIAMETER @12" C/C	"L" LENGTH	"E" EMBEDMENT	"D" SAWCUT DEPTH	MAX JOINT SPACING
5"	---	---	---	1 ¼"	12.5'
6"	¾"	14"	6"	1 ½"	15'
7"	⅞"	14"	6"	1 ¾"	15'
8"	1"	14"	6"	2"	15'

6 PAVING JOINT DETAIL
SCALE: NTS

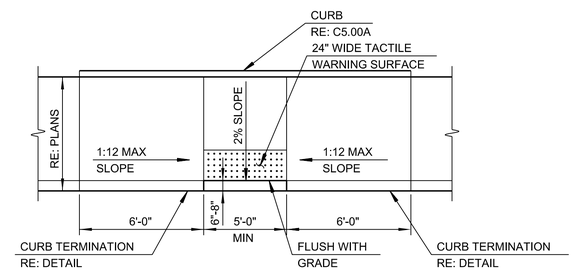

7 CURB RAMPS
SCALE: NTS

5 NOT USED
SCALE: NTS

STRIPE EXISTING PARKING LOT PER PHASE I PLANS AS PART OF PROJECT IMPROVEMENTS

RE: ARCH FOR INFORMATION NOT SHOWN

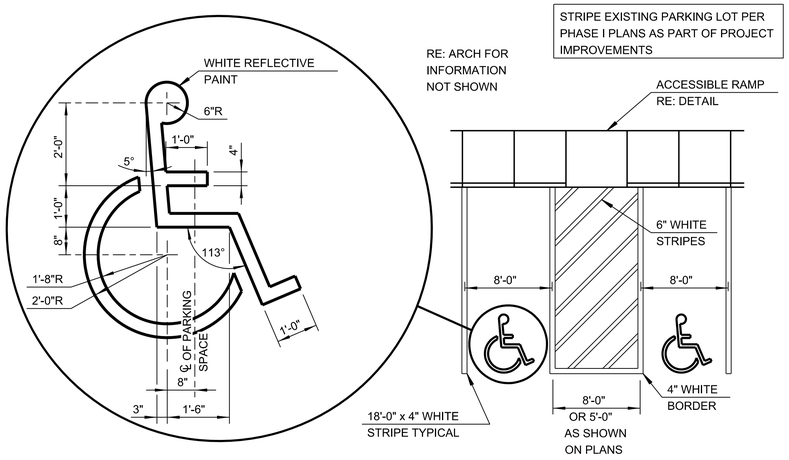

8 ACCESSIBLE STRIPING
SCALE: NTS

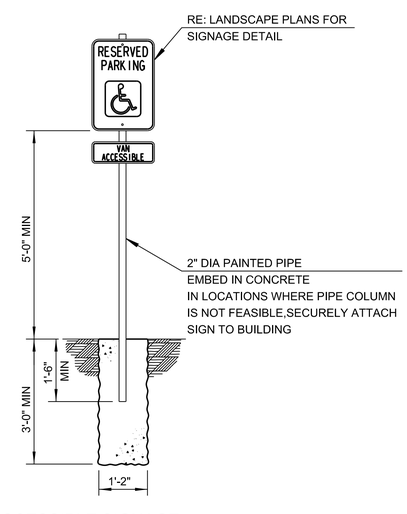

9 ACCESSIBLE SIGNAGE
SCALE: NTS

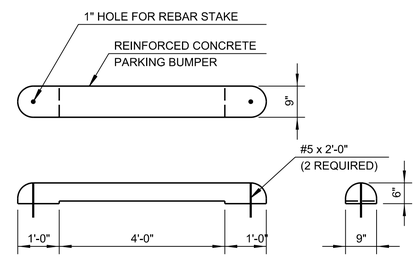

10 PARKING BUMPER
SCALE: NTS

BEFORE YOU DIG CALL OKIE 1-800-522-OKIE

CAUTION
NOTICE TO CONTRACTOR

THE CONTRACTOR IS SPECIFICALLY CAUTIONED THE LOCATION AND ELEVATION OF EXISTING UTILITIES AS SHOWN ON THESE PLANS ARE BASED ON RECORDS OF THE VARIOUS UTILITY COMPANIES AND MEASUREMENTS TAKEN IN THE FIELD. THE INFORMATION IS NOT TO BE RELIED ON AS BEING EXACT OR COMPLETE. THE CONTRACTOR MUST CALL THE LOCAL UTILITY LOCATION CENTER AT LEAST 72 HOURS BEFORE ANY EXCAVATION TO REQUEST EXACT FIELD LOCATIONS OF THE UTILITIES

Landscape Architect
howell & vancuren
601 S. Lewis Ave, Tulsa, OK 74104
918.592.1270 | howellvancuren.com

Architect
INTEGRATED ARCHITECTURE
P.O. Box 7806, Edmond, OK 73083
405.509.7800 | Integratedarc.com

Civil Engineer
wallace
410 N. Walnut Ave, Ste 200, Oklahoma City, OK 73104 405.236.5858 | wallacesc.com

Electrical Engineer
HP ENGINEERING
205 NW 63rd Street, Oklahoma City, OK 73116
405.286.9945 | hpengineeringinc.com

Graphic Design
Hoffer Waska creative
1443 S. Norfolk Ave, Tulsa, OK 74120
281.704.9729 |

City of Norman

RUBY GRANT PARK
AMMENDMENT ONE
3110 WEST FRANKLIN ROAD
NORMAN, OKLAHOMA 73072

REVISIONS:

PROFESSIONAL SEAL:

LICENSED PROFESSIONAL ENGINEER PATRICK K. ALTENDORF 31716 OKLAHOMA
12-11-2020

ISSUE DATE:
December 11, 2020

CONSTRUCTION DOCUMENTS

DRAWN BY: TV CHECKED BY: PA

SHEET NAME:
DETAILS

SHEET NUMBER:
C7.00A

DRAWING IS NOT TO SCALE UNLESS PRINTED ON SHEET SIZE: 22"x34" (ANSI D)

\\okc-server\civil\Projects\18800039 Ruby Grant Park Phase I\Dgn\18800039.03 NORTH PARKING ADDITION\C7_0Details.dgn
11:53:17 AM
12/11/2020

PIPE INSIDE DIAMETER		STANDARD TRENCH WIDTH	
MM	IN.	MM	IN.
150	6	450	18
200	8	600	24
250	10	750	30
300	12	750	30
375	15	900	36
450	18	900	36
525	21	1,050	42
600	24	1,050	42
675	27	1,200	48
750	30	1,200	48
900	36	1,350	54
1,050	42	1,500	60
1,200	48	1,650	66

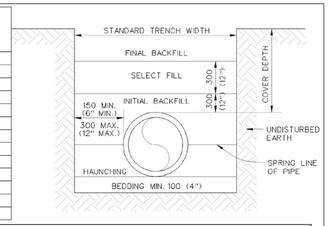

BEDDING MATERIALS

BACKFILL DESCRIPTION	NON-PAVED AREAS			PAVED AREAS (See Note 8)		
	P V C	DUCTILE IRON	H D P E	P V C	DUCTILE IRON	H D P E
FINAL BACKFILL	EXCAVATED MATERIAL	EXCAVATED MATERIAL	EXCAVATED MATERIAL	SBM	SBM	SBM
SELECT BACKFILL	SELECT FILL	SELECT FILL	SELECT FILL	SBM	SBM	SBM
INITIAL BACKFILL	COVER ≤10"-SAND OR SBM >10"-SBM	SELECT FILL	COVER ≤10"-SAND OR SBM >10"-SBM	SBM	SBM	SBM
HAUNCHING	COVER ≤10"-SAND OR SBM >10"-SBM	SELECT FILL	COVER ≤10"-SAND OR SBM >10"-SBM	SBM	SBM	SBM
BEDDING	See Note 5	See Note 5	See Note 5	See Note 5	See Note 5	See Note 5

NOTES:
1. INSTALLATION AND BACK FILLING SHALL MEET MANUFACTURERS RECOMMENDATIONS.
2. SELECT FILL CONSISTS OF EXCAVATED MATERIALS CONTAINING NO ROCKS LARGER THAN 50 MM (2").
3. STANDARD BEDDING MATERIAL (SBM) SHALL CONFORM TO ODOT 703.01, TYPE A AGGREGATE BASE OR FLOWABLE FILL PER SECTION 501.02(B).
4. COMPACTION REQUIREMENTS:
   a. NON-PAVED AREAS: 90% MAXIMUM STANDARD PROCTOR DENSITY FOR COHESIONLESS SOILS AND 85% FOR COHESIVE SOILS.
   b. PAVED AREAS: 95% MAXIMUM STANDARD PROCTOR DENSITY FOR COHESIONLESS SOILS.
5. IF TRENCH IS DRY BEDDING SHALL BE 100 MM (4") SAND OR TYPE A AGGREGATE BASE, AND IF WET SHALL BE NO. 57 OR NO. 67 ROCK PER SECTION 701.06(C).
6. IN SANDY SOIL, CONTRACTOR MAY BACKFILL WITH NATIVE MATERIAL AND USE WARNING TAPE 18" ABOVE PIPE.
7. NO WATER JETTING ALLOWED.
8. THE BACKFILL MATERIAL SHALL EXTEND A MINIMUM OF 2-FEET BEHIND THE BACK OF CURB, OR THE EDGE OF PAVEMENT WHERE NO CURB EXISTS.

METRIC UNITS ARE IN MM WITH ENGLISH UNITS IN PARENTHESIS, UNLESS INDICATED OTHERWISE.

WATER PIPE TRENCHING AND BEDDING

City Engineer Approval:		CITY OF NORMAN, OKLAHOMA	
Approval Date:	Revision Date: 6-14-2001	Rev. No. 3	DRAWING NO. W 01

1 PIPE TRENCH-ALL PIPES EXCEPT STORM SEWER
SCALE: NTS

INSTALL AND MAINTAIN ALL STORMWATER CONTROL MEASURES PER PROJECT STORMWATER POLLUTION PREVENTION PLAN AND OKR10 PERMIT.

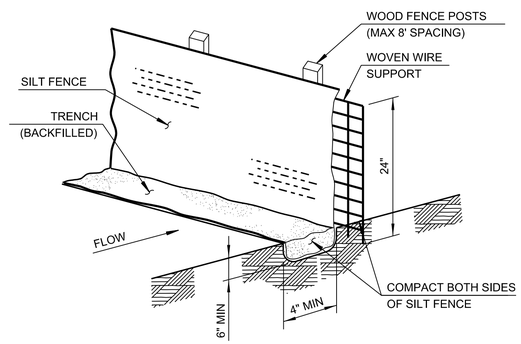

2 SILT FENCE
SCALE: NTS

INSTALL AND MAINTAIN ALL STORMWATER CONTROL MEASURES PER PROJECT STORMWATER POLLUTION PREVENTION PLAN AND OKR10 PERMIT.

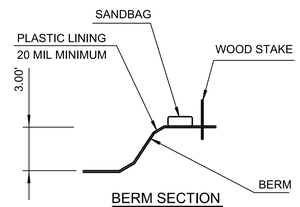

BERM SECTION

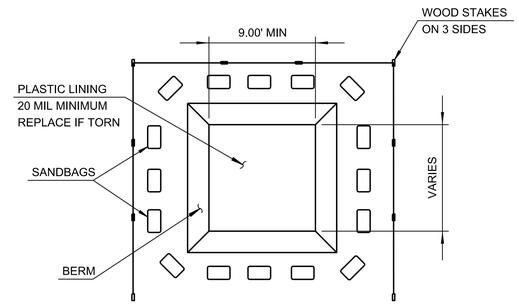

PLAN

3 CONCRETE WASHOUT PIT
SCALE: NTS

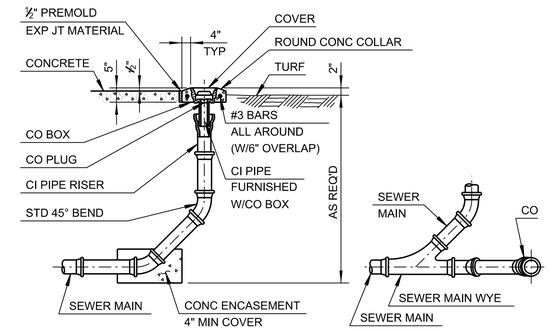

ELEVATION PLAN

4 CLEANOUT
SCALE: NTS

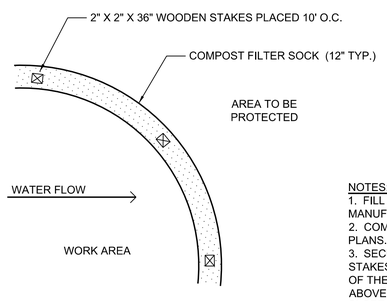

PLAN NTS

CRITERIA FOR COMPOST FILTER SOCK PLACEMENT	
Land Slope	Maximum Slope Length Above Compost Filter Sock
Percent	Feet
<2	100
2 to 5	75
5 to 10	50
10 to 20	25
>20*	15
*In areas where the slope is greater than 20%, a flat area length of 10 ft between the toe of the slope to the compost filter sock should be provided.	

TABLE 1

NOTES:
1. FILL TO MEET APPLICATION REQUIREMENTS PER MANUFACTURER.
2. COMPOST MATERIAL TO BE INSTALLED ON SITE PER PLANS.
3. SECURE COMPOST FILTER SOCK WITH 2"X2"X36" WOODEN STAKES. STAKES SHALL BE DRIVEN THROUGH THE MIDDLE OF THE SOCKS LEAVING AT LEAST 3" OF STAKE EXTENDING ABOVE, THE SAKES SHOULD BE DRIVEN PERPENDICULAR TO SLOPE FACE.
4. MAXIMUM SLOPE LENGTH BEHIND COMPOST FILTER SOCK SHALL NOT EXCEED THOSE SHOWN ON TABLE 1.
5. INSPECT AND REPAIR COMPOST FILTER SOCKS AFTER EACH STORM EVENT AND REMOVE SEDIMENT WHEN NECESSARY. REMOVE SEDIMENT ONCE IT HAS ACCUMULATED TO ONE-HALF THE ORIGINAL HEIGHT OF THE BARRIER.
6. REMOVED SEDIMENT SHALL BE DEPOSITED TO AN AREA THAT WILL NOT CONTRIBUTE TO SEDIMENT OFF-SITE AND CAN BE PERMANENTLY STABILIZED.

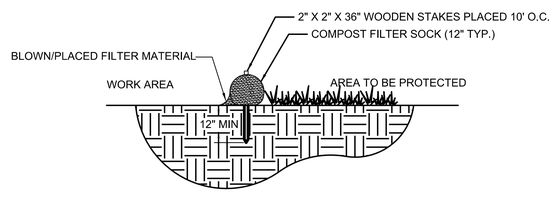

SECTION NTS

5 COMPOST FILTER SOCK
SCALE: NTS

Landscape Architect
howell & vancuren
601 S. Lewis Ave, Tulsa, OK 74104
918.592.1270 | howellvancuren.com

Architect
INTEGRATED ARCHITECTURE
P.O. Box 7806, Edmond, OK 73083
405.509.7800 | Integratedarc.com

Civil Engineer
wallace
410 N. Walnut Ave, Ste 200, Oklahoma City, OK 73104 405.236.5858 | wallacesc.com

Electrical Engineer
HP ENGINEERING
205 NW 63rd Street, Oklahoma City, OK 73116
405.286.9945 | hpengineeringinc.com

Graphic Design
Hoffer Waska creative
1443 S. Norfolk Ave, Tulsa, OK 74120
281.704.9729 |

City of Norman
RUBY GRANT PARK
3110 WEST FRANKLIN ROAD
NORMAN, OKLAHOMA 73072

REVISIONS:

PROFESSIONAL SEAL:

ISSUE DATE:
December 11, 2020

CONSTRUCTION DOCUMENTS

DRAWN BY: TV CHECKED BY: PA

SHEET NAME:
DETAILS

SHEET NUMBER:
C7.10A

DRAWING IS NOT TO SCALE UNLESS PRINTED ON SHEET SIZE: 22"x34" (ARCH D)

BEFORE YOU DIG CALL OKIE 1-800-522-OKIE

CAUTION
NOTICE TO CONTRACTOR
THE CONTRACTOR IS SPECIFICALLY CAUTIONED THE LOCATION AND ELEVATION OF EXISTING UTILITIES AS SHOWN ON THESE PLANS ARE BASED ON RECORDS OF THE VARIOUS UTILITY COMPANIES AND MEASUREMENTS TAKEN IN THE FIELD. THE INFORMATION IS NOT TO BE RELIED ON AS BEING EXACT OR COMPLETE. THE CONTRACTOR MUST CALL THE LOCAL UTILITY LOCATION CENTER AT LEAST 72 HOURS BEFORE ANY EXCAVATION TO REQUEST EXACT FIELD LOCATIONS OF THE UTILITIES

12/11/2020 11:53:32 AM \\okc-servercivil\Projects\18800039 Ruby Grant Park Phase II\Dgn\18800039.03 NORTH PARKING ADDITION\C7_1Details.dgn

PIPE INSIDE DIAMETER		STANDARD TRENCH WIDTH	
MM	IN.	MM	IN.
≤375	≤15	900	36
450	18	900	36
525	21	1,050	42
600	24	1,050	42
675	27	1,200	48
750	30	1,200	48
900	36	1,350	54
1,050	42	1,500	60
1,200	48	1,650	66
1,350	54	1,800	72
1,500	60	1,950	78
1,650	66	2,100	84

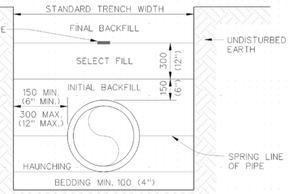

BACKFILL DESCRIPTION	NON-PAVED AREAS			PAVED AREAS (See Note 7)		
	PVC	DIP	HDPE	PVC	DIP	HDPE
FINAL BACKFILL	EXCAVATED MATERIAL	EXCAVATED MATERIAL	EXCAVATED MATERIAL	SBM	SBM	SBM
SELECT BACKFILL	SELECT FILL (SF)	SELECT FILL	SELECT FILL	SBM	SBM	SBM
INITIAL BACKFILL	COVER ≤10" SF >10" SBM	COVER ≤10" SF >10" SF	COVER ≤10" SF >10" SBM	SBM	SBM	SBM
HAUNCHING	COVER ≤10" SBM >10" SBM	COVER ≤10" SF >10" SBM	COVER ≤10" SBM >10" SBM	SBM	SBM	SBM
BEDDING	See Note 5	See Note 5	See Note 5	See Note 5	See Note 5	See Note 5

NOTES:
1. BACK FILLING FOR PVC PIPE SHALL MEET THE REQUIREMENTS OF ASTM D 2321.
2. SELECT FILL CONSISTS OF EXCAVATED MATERIALS CONTAINING NO ROCKS LARGER THAN 50 MM (2").
3. STANDARD BEDDING MATERIAL (SBM) SHALL CONFORM TO ODOT 703.01, TYPE A AGGREGATE BASE, OR FLOWABLE FILL PER SECTION 501.02(B).
4. COMPACTION REQUIREMENTS:
   a. NON- PAVED AREAS: 90% MAXIMUM STANDARD PROCTOR DENSITY FOR COHESIONLESS SOILS AND 85% FOR COHESIVE SOILS.
   b. PAVED AREAS: 95% MAXIMUM STANDARD PROCTOR DENSITY FOR COHESIONLESS SOILS.
5. IF TRENCH IS DRY BEDDING SHALL BE 100 MM (4") TYPE A AGGREGATE BASE, AND IF WET SHALL BE NO. 57 OR NO. 67 ROCK PER SECTION 701.06(C).
6. NO WATER JETTING ALLOWED UNDER PAVEMENT.
7. THE BACKFILL MATERIAL SHALL EXTEND A MINIMUM OF 2-FEET BEHIND THE BACK OF CURB, OR THE EDGE OF PAVEMENT WHERE NO CURB EXISTS.
8. WARNING TAPE SHALL BE INSTALLED ABOVE ALL NEW AND REHABILITATED UNDERGROUND PIPING AFTER PLACEMENT OF SELECT BACKFILL AS PER SECTION 2506.1(J).

METRIC UNITS ARE IN MM WITH ENGLISH UNITS IN PARENTHESIS, UNLESS INDICATED OTHERWISE.

SANITARY SEWER PIPE TRENCHING AND BEDDING

City Engineer Approval:		CITY OF NORMAN, OKLAHOMA	
Approval Date:	Revision Date: 1-30-2006	Rev. No. 6	DRAWING NO. SS 01

1 SANITARY SEWER PIPE TRENCHING AND BEDDING
SCALE: NTS

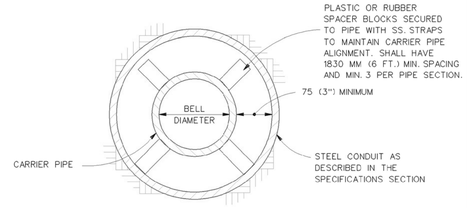

PIPE & STEEL CONDUIT SCHEDULE			
CARRIER PIPE DIAMETER		MIN. CONDUIT DIAMETER	
MM	IN.	MM	IN.
100	4	250	10
150	6	300	12
200	8	350	14
250	10	450	18
300	12	500	20
400	16	600	24
450	18	650	26
500	20	750	30
600	24	825	33
750	30	1000	40
900	36	1350	54
1050	42	1500	60

METRIC UNITS ARE IN MM WITH ENGLISH UNITS IN PARENTHESIS, UNLESS INDICATED OTHERWISE.

BORING AND CONDUIT

City Engineer Approval:		CITY OF NORMAN, OKLAHOMA	
Approval Date:	Revision Date: 11-12-97	Rev. No. 1	DRAWING NO. GC 01

1 BORING AND CONDUIT
SCALE: NTS

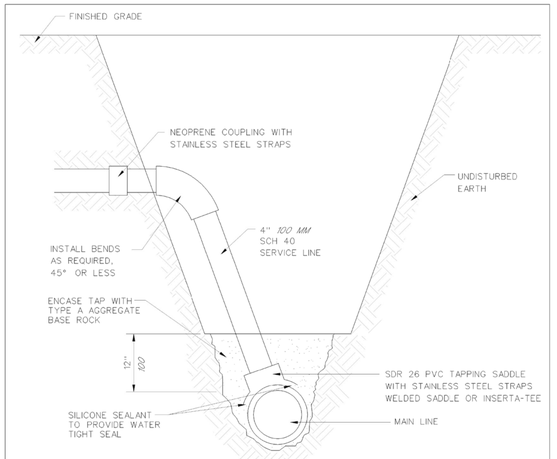

NOTES:
1. ALL MAIN LINE HOLES TO BE SAWED OR DRILLED AND COUPON PRESENTED AT TIME OF INSPECTION.
2. TAPS SHALL BE LEFT UNCOVERED UNTIL TAP IS INSPECTED.
3. THE CONTRACTOR SHALL DRILL OR SAW A 4" DIAMETER HOLE INTO THE EXISTING SEWER MAIN.
4. THERE SHALL BE A MINIMUM OF 2" FROM THE EDGE OF THE HOLE TO THE OUTSIDE EDGE OF THE TAPPING SADDLE.
5. ON AN EXISTING TAP THAT IS BEING REPAIRED, IF THE HOLE IS LARGER THAN 4" DIAMETER OR THE PIPE IS IN POOR CONDITION, THEN THAT SECTION OF SANITARY SEWER PIPE SHALL BE REPLACED. SAID PIPE SHALL BE REPLACED WITH SDR 35 PVC TO A POINT UNTIL SOUND PIPE IS FOUND. THE MINIMUM LENGTH OF PIPE TO BE REPLACED IS 4 FEET.
6. FOR CLAY PIPE ONLY, A FLEXIBLE SADDLE MAY BE USED. THE SADDLE SHALL BE A DFW/HPI FLEXIBLE SADDLE AS MANUFACTURED BY "DFW QUALITY PRODUCTS BY NDS" OR EQUAL. WHEN INSTALLING A FLEXIBLE SADDLE, THE ABOVE REQUIREMENTS STILL APPLY.

METRIC UNITS ARE IN MM AND SHOWN IN ITALICS, UNLESS INDICATED OTHERWISE.

TAPPING AN EXISTING SANITARY SEWER LINE

City Engineer Approval:		CITY OF NORMAN, OKLAHOMA	
Approval Date:	Revision Date: 5-01-2001	Rev. No. 3	DRAWING NO. SS 07a

3 SANITARY SEWER LINE TAP
SCALE: NTS

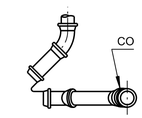

PLAN

CAUTION
NOTICE TO CONTRACTOR
THE CONTRACTOR IS SPECIFICALLY CAUTIONED THE LOCATION AND ELEVATION OF EXISTING UTILITIES AS SHOWN ON THESE PLANS ARE BASED ON RECORDS OF THE VARIOUS UTILITY COMPANIES AND MEASUREMENTS TAKEN IN THE FIELD. THE INFORMATION IS NOT TO BE RELIED ON AS BEING EXACT OR COMPLETE. THE CONTRACTOR MUST CALL THE LOCAL UTILITY LOCATION CENTER AT LEAST 72 HOURS BEFORE ANY EXCAVATION TO REQUEST EXACT FIELD LOCATIONS OF THE UTILITIES

Landscape Architect
howell & vancuren
601 S. Lewis Ave, Tulsa, OK 74104
918.592.1270 | howellvancuren.com

Architect
INTEGRATED ARCHITECTURE
P.O. Box 7806, Edmond, OK 73083
405.509.7800 | Integratedarc.com

Civil Engineer
wallace
410 N. Walnut Ave, Ste 200, Oklahoma City, OK 73104 405.236.5858 | wallacesc.com

Electrical Engineer
HP ENGINEERING
205 NW 63rd Street, Oklahoma City, OK 73116
405.286.9945 | hpengineeringinc.com

Graphic Design
Hoffer Waska creative
1443 S. Norfolk Ave, Tulsa, OK 74120
281.704.9729 |

City of Norman
RUBY GRANT PARK
3110 WEST FRANKLIN ROAD
NORMAN, OKLAHOMA 73072

REVISIONS:

PROFESSIONAL SEAL:
LICENSED PROFESSIONAL ENGINEER
PATRICK L. ALTENDORF
31716
OKLAHOMA
12-11-2020

ISSUE DATE:
December 11, 2020

CONSTRUCTION DOCUMENTS
DRAWN BY: TV CHECKED BY: PA
SHEET NAME:
DETAILS

SHEET NUMBER:
C7.20A

DRAWING IS NOT TO SCALE UNLESS PRINTED ON SHEET SIZE: 22"x34" (ARCH D)

12/11/2020 11:53:58 AM \\okc-server\civil\Projects\18800039 Ruby Grant Park Phase II\Dgn\18800039.03 NORTH PARKING ADDITION\C7_2Details.dgn

GENERAL NOTES

DESIGN PARAMETERS

1. BUILDING CODE: 2015 INTERNATIONAL BUILDING CODE
2. DEAD LOADS:
   A. ROOF ---------- 15 PSF
3. LIVE LOADS:
   A. ROOF ---------- 20 PSF (UNIFORM)
4. SNOW LOADS:
   A. GROUND SNOW LOAD, Pg ---------- 10 PSF
5. WIND LOADS:
   A. BASIC WIND SPEED (3 SECOND GUST) ---------- 115 MPH
   B. RISK CATEGORY ---------- II
   C. EXPOSURE CLASSIFICATION ---------- C
   D. INTERNAL PRESSURE COEFFICIENT ---------- 0.18
   E. BASIC WIND PRESSURE (qh,UNFACTORED) ---------- 26.5 PSF
   F. DESIGN WIND PRESSURE ON EXTERIOR WALLS (C&C LOAD BASED ON 100 SQ.FT AREA)
      - END ZONES, (3'-0") ---------- 32.5 PSF
      - INTERIOR ZONES ---------- 29.2 PSF
   G. DESIGN UPLIFT PRESSURE ON ROOFS (C&C LOAD BASED ON 100 SQ.FT AREA)
      - CORNER ZONES, (3'-0") ---------- 57.7 PSF
      - EDGE ZONES, (3'-0") ---------- 36.5 PSF
      - INTERIOR ZONES ---------- 33.9 PSF
6. SEISMIC LOADS:SPECTRAL RESPONSE ACCELERATION
   A. (SHORT PERIOD), Ss ---------- 0.271
   B. SPECTRAL RESPONSE ACCELERATION;(1-SEC. PERIOD), S1 ---------- 0.079
   C. SPECTRAL RESPONSE COEFFICIENT;(SHORT PERIOD), Sds ---------- 0.286
   D. SPECTRAL RESPONSE COEFFICIENT;(1-SEC. PERIOD), Sd1 ---------- 0.126
   E. SITE CLASS ---------- D
   F. IMPORTANCE FACTOR, I ---------- 1.0
   G. SEISMIC DESIGN CATEGORY ---------- B
   H. BASIC STRUCTURAL SYSTEM AND SEISMIC RESISTING SYSTEM ---------- ORDINARY REINFORCED MASONRY SHEAR WALLS
   I. RESPONSE MODIFICATION FACTOR, R ---------- 2
   J. SYSTEM OVER-STRENGTH FACTOR, W ---------- 2.5
   K. DEFLECTION AMPLIFICATION FACTOR, Cd ---------- 2
   L. ANALYSIS PROCEDURE ---------- EQUIVALENT LATERAL FORCE
7. FOUNDATIONS:
   SPREAD FOOTINGS HAVE BEEN DESIGNED FOR AN ALLOWABLE NET BEARING PRESSURE OF 2000 PSF ON NATURAL SOIL OR COMPACTED FILL.
   CONTINUOUS FOOTINGS HAVE BEEN DESIGNED FOR AN ALLOWABLE NET BEARING PRESSURE OF 2000 PSF ON NATURAL SOIL OR COMPACTED FILL.

GENERAL

1. STRUCTURAL DRAWINGS ARE NOT STAND-ALONE DOCUMENTS AND ARE INTENDED TO BE USED IN CONJUNCTION WITH CIVIL, ARCHITECTURAL, MECHANICAL, ELECTRICAL, AND DRAWINGS FROM OTHER DISCIPLINES. THE CONTRACTOR SHALL COORDINATE ALL REQUIREMENTS OF THE CONTRACT DOCUMENTS INTO THE SHOP DRAWINGS AND FIELD WORK.
2. WHERE CONFLICT EXISTS AMONG VARIOUS PARTS OF THE STRUCTURAL CONTRACT DOCUMENTS, STRUCTURAL DRAWINGS, GENERAL NOTES, AND SPECIFICATIONS, THE STRICTEST REQUIREMENTS, AS INDICATED BY THE ENGINEER, SHALL GOVERN.
3. WHERE MEMBER LOCATIONS ARE NOT SPECIFICALLY DIMENSIONED, THE FOLLOWING RULES SHALL APPLY:
   A. COLUMNS ARE CENTERED ON GRID LINES.
   B. FOOTINGS ARE CENTERED BENEATH COLUMNS.
   C. CONTINUOUS FOOTINGS ARE CENTERED BENEATH WALLS.
   D. FRAMING MEMBERS ARE EITHER LOCATED ON GRID LINES OR ARE EQUALLY SPACED BETWEEN LOCATED MEMBERS.
4. ALL STRUCTURAL ELEMENTS OF THE PROJECT HAVE BEEN DESIGNED BY THE STRUCTURAL ENGINEER TO RESIST THE REQUIRED CODE VERTICAL AND LATERAL FORCES THAT COULD OCCUR IN THE FINAL COMPLETED STRUCTURE ONLY. IT IS THE RESPONSIBILITY OF THE CONTRACTOR TO PROVIDE ALL REQUIRED BRACING DURING CONSTRUCTION TO MAINTAIN THE STABILITY AND SAFETY OF ALL STRUCTURAL ELEMENTS DURING THE CONSTRUCTION PROCESS UNTIL THE LATERAL LOAD RESISTING OR STABILITY-PROVIDING SYSTEM IS COMPLETELY INSTALLED AND THE STRUCTURE IS COMPLETELY TIED TOGETHER.
5. THE STRUCTURE HAS BEEN DESIGNED FOR THE LOADS IDENTIFIED WITHIN THESE STRUCTURAL DRAWINGS THAT ARE ANTICIPATED TO BE APPLIED TO THE FINAL STRUCTURE ONE COMPLETED AND OCCUPIED. THE CONTRACTOR SHALL NOT OVERLOAD THE STRUCTURE DURING CONSTRUCTION. THE CONTRACTOR SHALL BE RESPONSIBLE FOR CHECKING THE ADEQUACY OF THE STRUCTURE TO SUPPORT ANY APPLIED CONSTRUCTION LOADS, INCLUDING THOSE DUE TO CONSTRUCTION VEHICLES OR EQUIPMENT, MATERIAL HANDLING OR STORAGE, SHORING AND RESHORING, OR ANY OTHER PROPOSED CONSTRUCTION LOADS THAT ARE IN EXCESS OF THE STATED DESIGN LOADS. THE STRUCTURAL ENGINEER IS NOT RESPONSIBLE TO DESIGN OR CHECK THE STRUCTURE FOR LOADS APPLIED TO THE STRUCTURE FOR ANY CONSTRUCTION ACTIVITY.
6. WEIGHTS OF MECHANICAL EQUIPMENT SHOWN ON THE STRUCTURAL PLANS ARE FOR UNITS SPECIFIED BY THE MECHANICAL ENGINEER. CONTRACTOR SHALL VERIFY THE WEIGHTS. ANY SUBSTITUTIONS THAT RESULT IN INCREASED WEIGHT SHALL BE APPROVED BY THE STRUCTURAL ENGINEER OF RECORD.
7. THE SIZE AND LOCATION OF EQUIPMENT PADS AND PENETRATIONS THROUGH THE STRUCTURE FOR MECHANICAL, ELECTRICAL, AND PLUMBING WORK SHALL BE VERIFIED BY THE CONTRACTOR. OPENINGS AND PENETRATIONS NOT SPECIFICALLY SHOWN ON THE STRUCTURAL DRAWINGS SHALL BE SUBJECT TO APPROVAL BY THE STRUCTURAL ENGINEER OF RECORD.
8. PRIOR TO FABRICATION AND/OR ERECTION OF ANY MATERIALS, THE CONTRACTOR SHALL FIELD VERIFY ALL PERTINENT EXISTING DIMENSIONS, ELEVATIONS, AND CONDITIONS AND SHALL REPORT ANY DISCREPANCIES TO THE STRUCTURAL ENGINEER OF RECORD OR THE ARCHITECT IMMEDIATELY UPON DISCOVERY.
9. BACKFILL BOTH SIDES OF ALL FOUNDATION AND RETAINING WALLS EQUALLY UNTIL LOW SIDE IS UP TO FINISH GRADE. DO NOT BACKFILL ANY WALLS UNTIL CONCRETE HAS REACHED ITS SPECIFIED 28-DAY COMPRESSIVE STRENGTH.
10. CONNECTIONS OF SYSTEMS DESIGNED BY THE CONTRACTOR'S ENGINEER SUCH AS, BUT NOT LIMITED TO, CLADDING, STAIRS, ELEVATORS AND MEP LOADS ARE ASSUMED TO IMPOSE VERTICAL AND/OR HORIZONTAL LOADS ON THE BASE BUILDING STRUCTURAL MEMBERS WITHOUT GENERATING TORSION IN THE SUPPORTING STRUCTURAL MEMBERS. CONTRACTOR IS RESPONSIBLE FOR FURNISHING AND INSTALLING ALL SUPPLEMENTARY BRACING MEMBERS AS REQUIRED TO PREVENT TORSION ON THE BASE BUILDING STRUCTURE.
11. ANY MATERIALS OR PRODUCTS SUBMITTED FOR APPROVAL THAT ARE DIFFERENT FROM THE MATERIAL OR PRODUCTS SPECIFIED IN THE STRUCTURAL CONTRACT DOCUMENTS WILL BE APPROVED ONLY IF THE FOLLOWING CRITERIA ARE SATISFIED:
    A. A COST SAVINGS TO THE OWNER IS DOCUMENTED AND SUBMITTED WITH THE REQUEST.
    B. THE MATERIAL OR PRODUCT HAS BEEN APPROVED BY THE INTERNATIONAL CODE COUNCIL (ICC) AND THE ICC REPORT IS SUBMITTED WITH THE REQUEST.
12. THE ENGINEER SHALL NOT HAVE CONTROL NOR CHARGE OF, AND SHALL NOT BE RESPONSIBLE FOR, CONSTRUCTION MEANS, METHODS, TECHNIQUES, SEQUENCES, OR PROCEDURES, FOR SAFETY PRECAUTIONS AND PROGRAMS IN CONNECTION WITH THE WORK, FOR THE ACTS OR OMISSION OF THE CONTRACTOR, SUBCONTRACTOR, OR ANY OTHER PERSONS PERFORMING ANY OF THE WORK, OR FOR THE FAILURE OF ANY OF THEM TO CARRY OUT THE WORK IN ACCORDANCE WITH THE CONTRACT DOCUMENTS.
13. PERIODIC SITE OBSERVATION BY FIELD REPRESENTATIVES OF 360 ENGINEERING GROUP, PLLC. IS SOLELY FOR THE PURPOSE OF BECOMING GENERALLY FAMILIAR WITH THE PROGRESS AND QUALITY OF THE WORK COMPLETED AND DETERMINING, IN GENERAL, IF THE WORK OBSERVED IS BEING PERFORMED IN A MANNER INDICATING THAT THE WORK, WHEN FULLY COMPLETED, WILL BE IN ACCORDANCE WITH THE STRUCTURAL CONTRACT DOCUMENTS. THIS LIMITED SITE OBSERVATION SHOULD NOT BE CONSTRUED AS AN EXHAUSTIVE OR CONTINUOUS CHECK OF THE QUALITY OR QUANTITY OF THE WORK, BUT RATHER PERIODIC IN AN EFFORT TO GUARD THE OWNER AGAINST DEFECTS OR DEFICIENCIES IN THE WORK OF THE CONTRACTOR.

DIVISION 2 - FOUNDATIONS

1. RECOMMENDATIONS CONTAINED IN "GEOTECHNICAL ENGINEERING REPORT, RUBY GRANT PARK, 3110 W FRANKLIN ROAD NORMAN, OKLAHOMA", PROJECT NUMBER 58:1070 BY ECS SOUTHWEST, LLP DATED FEBRUARY 6, 2019 WERE USE FOR DESIGN. REFER TO DESIGN PARAMETERS FOR SOIL DESIGN CRITERIA BASED ON THESE RECOMMENDATIONS.
2. THE GENERAL CONTRACTOR SHALL BE RESPONSIBLE FOR REVIEWING THE GEOTECHNICAL REPORT AND SHALL FOLLOW THE RECOMMENDATIONS SPECIFIED THEREIN, INCLUDING, BUT NOT LIMITED TO, SUBGRADE PREPARATIONS, GROUND WATER MANAGEMENT AND STEEP SLOPE BEST MANAGEMENT PRACTICES.
3. THE GEOTECHNICAL ENGINEER SHALL BE PRESENT DURING PROOF ROLLING AND SHALL INSPECT THE SUBGRADE PRIOR TO ANY FILL OPERATIONS. ALL COMPACTED FILL SHALL BE CONTINUOUSLY INSPECTED BY THE OWNER'S SELECTED INDEPENDENT TESTING LABORATORY.
4. FOOTINGS SHALL BEAR EITHER ON COMPETENT NATIVE SOIL OR COMPACTED STRUCTURAL FILL AS PER THE GEOTECHNICAL REPORT. EXTERIOR PERIMETER FOOTINGS SHALL BEAR NOT LESS THAN 24 INCHES BELOW FINISH GRADE UNLESS OTHERWISE SPECIFIED BY THE GEOTECHNICAL ENGINEER AND/OR BUILDING OFFICIAL. IF THE SOIL AT THE BEARING ELEVATIONS SHOWN IS OF QUESTIONABLE BEARING VALUE, THE STRUCTURAL ENGINEER OF RECORD OR ARCHITECT SHALL BE NOTIFIED IMMEDIATELY.
5. ALL FILL MATERIAL UNDER THE STRUCTURE SHALL COMPLY WITH REQUIREMENTS STATED IN THE GEOTECHNICAL REPORT, UNO.
6. PROVIDE A MINIMUM OF A 4-INCH CLEAN, FREE-DRAINING GRANULAR SUBBASE FILL BELOW ALL INTERIOR SLABS-ON-GRADE UNLESS NOTED OR DETAILED OTHERWISE. SUBBASE SHALL MEET GRADATION REQUIREMENTS OF ASTM C-33 SIZE NO. 67, UNLESS SPECIFICALLY NOTED OTHERWISE.
7. A 15-MIL MINIMUM POLYETHYLENE FILM VAPOR RETARDER, MEETING THE REQUIREMENTS IN THE SPECIFICATIONS, SHALL BE PLACED BELOW ALL INTERIOR SLABS-ON-GRADE.
8. THE CONTRACTOR IS CAUTIONED AGAINST LOADING SLAB-ON-GRADE WITH CONSTRUCTION EQUIPMENT. THE SLAB HAS NOT BEEN DESIGNED FOR CONSTRUCTION EQUIPMENT AND MAY REQUIRE AN INCREASE IN SLAB THICKNESS AND/OR REINFORCEMENT. IF THE CONSTRUCTION LOADING EXCEEDS THE DESIGN LOADS SHOWN IN THE DESIGN CRITERIA, THE CONTRACTOR IS REQUIRED TO SUBMIT CALCULATIONS SIGNED AND SEALED BY A REGISTERED STRUCTURAL, CIVIL, OR GEOTECHNICAL ENGINEER IN THE STATE WHERE THE PROJECT IS LOCATED VERIFYING THE ADEQUACY OF THE SLAB.
9. EXTERIOR FOOTINGS FOR STAIRS AND RAMPS SHALL BEAR AT OR BELOW MINIMUM BEARING DEPTH.
10. FOUNDATION WALLS SHALL HAVE ADEQUATE TEMPORARY BRACING INSTALLED BY THE CONTRACTOR BEFORE BACKFILL IS PLACED AGAINST THEM. TEMPORARY BRACING SHALL NOT BE REMOVED UNTIL WALL IS PERMANENTLY BRACED.

DIVISION 3 - CONCRETE

1. ALL CONCRETE SHALL CONFORM TO THE SPECIFICATIONS FOR STRUCTURAL CONCRETE, ACI 301.
2. CONTRACTOR SHALL FOLLOW ACI 306.1 FOR COLD WEATHER CONCRETE PLACEMENT AND CURING GUIDELINES.
3. ARRANGEMENTS AND DETAIL OF REINFORCING BENDS SHALL BE IN ACCORDANCE WITH THE LATEST EDITION OF PUBLICATION SP-66, "ACI DETAILING MANUAL" AND ACI 318, "BUILDING CODE REQUIREMENTS FOR STRUCTURAL CONCRETE."
4. UNLESS NOTED OTHERWISE, BAR SPLICES SHALL BE CLASS B TENSION LAPS AND SHALL BE LAPPED WITH MINIMUM LENGTHS AS LISTED IN THE LAP LENGTH SCHEDULE, WHERE REQUIRED IN REINFORCING. SHORTER LAPS MAY BE ACCEPTABLE IF SPECIFIC LOCATIONS OF ALTERNATE LAPS ARE SHOWN ON THE REINFORCING PLACEMENT DRAWINGS AND CALCULATIONS ARE SUBMITTED BY A REGISTERED PROFESSIONAL ENGINEER, LICENSED TO PRACTICE IN THE STATE IN WHICH THE PROJECT IS LOCATED, JUSTIFYING THE ALTERNATE LAP LENGTHS.
5. PROVIDE SUITABLE WIRE SPACERS, CHAIRS, TIES, ETC. FOR SUPPORTING REINFORCING STEEL IN THE PROPER POSITION BEFORE PLACING CONCRETE. DO NOT "WET STICK" DOWELS.
6. ALL WELDED WIRE FABRIC SHALL BE LAPPED A MINIMUM OF 12" AT THE SIDES AND ENDS.
7. LOCATIONS AND SIZES OF OPENINGS, SLEEVES, ETC. REQUIRED FOR OTHER TRADES MUST BE VERIFIED BY THESE TRADES BEFORE PLACING CONCRETE.
8. ALL SLOTS, SLEEVES, TRENCHES AND OTHER EMBEDDED ITEMS SHALL BE SET AND SECURED AGAINST MOVEMENT BEFORE THE CONCRETE IS PLACED. SEE ARCHITECTURAL, ELECTRICAL, MECHANICAL, PLUMBING, AND VENDOR DRAWINGS FOR SIZES, AND LOCATIONS. COORDINATE LOCATIONS, SPACING, AND SIZES WITH THE STRUCTURAL ENGINEER OF RECORD PRIOR TO PLACING CONCRETE.
9. AS PART OF THE SUBMITTAL PROCESS, THE ELECTRICAL AND MECHANICAL CONTRACTOR(S) SHALL SUBMIT PROPOSED ROUTING PLAN FOR ALL PIPES, CONDUITS, OR OTHER DEVICES TO BE EMBEDDED IN THE CONCRETE. THE SUBMITTAL SHALL SHOW SPECIFIC SIZES AND LOCATIONS OF ALL PROPOSED EMBED ITEMS REFERENCING PROXIMITY TO BEAM, COLUMN, AND SLAB EDGES. NO ITEMS SHALL BE ALLOWED TO BE EMBEDDED IN THE CONCRETE WITHOUT PRIOR WRITTEN APPROVAL FROM THE STRUCTURAL ENGINEER OF RECORD.
10. CONDUITS AND PIPES EMBEDDED IN CONCRETE SLABS MAY BE NO LARGER THAN 1/3 OF THE SLAB THICKNESS (BASED ON THE MAXIMUM OUTSIDE DIAMETER) AND SHALL HAVE A CENTER-TO-CENTER SPACING NO LESS THAN THREE (3) CONDUIT DIAMETERS. REGARDLESS OF DIAMETER, THE MINIMUM CLEAR SPACING BETWEEN CONDUITS OR REINFORCING SHALL BE (1) INCH.
11. NO MORE THAN FOUR CONDUITS MAY BE PLACED ADJACENT TO EACH OTHER WITHOUT PRIOR APPROVAL IN WRITING FROM THE STRUCTURAL ENGINEER OF RECORD.
12. NO ALUMINUM CONDUITS, DEVICES, OR FIXTURES MAY BE EMBEDDED INTO THE CONCRETE SO THAT THE ALUMINUM IS IN DIRECT CONTACT WITH THE CONCRETE.
13. CORNER BARS SHALL BE PROVIDED FOR ALL HORIZONTAL REINFORCING BARS AT THE INTERSECTIONS AND CORNERS OF ALL STRIP FOOTINGS, BEAMS, AND WALLS UNLESS NOTED OTHERWISE. CORNER BARS SHALL BE OF THE SAME SIZE AND GRADE AS THE HORIZONTAL REINFORCING THEY CONNECT. MINIMUM LAP LENGTHS SHALL BE AS INDICATED ABOVE UNLESS NOTED OTHERWISE.

LAP LENGTHS FOR SPLICES

BAR SIZE	TOP BARS**	OTHER
#3	1'-5"	1'-4"
#4	1'-11"	1'-5"
#5	2'-4"	1'-10"
#6	2'-10"	2'-2"
#7	4'-7"	3'-7"
#8	5'-10"	4'-6"
#9	7'-2"	5'-6"

* BASED ON MINIMUM CONCRETE COVER OF 1 1/2", A MINIMUM CENTER-TO-CENTER BAR SPACING OF THREE BAR DIAMETERS, AND 3,000 PSI CONCRETE.

** TOP BARS ARE HORIZONTAL BARS WITH MORE THAN (12) INCHES OF CONCRETE CAST BELOW BARS.

REQUIRED CONCRETE STRENGTHS (28 DAY)

CONCRETE ELEMENT	f'c (PSI)
FOOTINGS	3,000
SLABS-ON-GRADE	3,500
EXTERIOR STRUCTURAL CONCRETE (AIR ENTRAINED)	4,500
SIDEWALKS (AIR ENTRAINED)	3,500

REINFORCEMENT MATERIALS

REINF ELEMENT	ASTM	Fy (KSI)	Fu (KSI)
TYP REINFORCING	A615	60	90
WELDED AND BENT REINF	A706	60	80
WELDED WIRE REINFORCING, SMOOTH	A185	65	75
WELDED WIRE REINFORCING, DEFORMED	A497	70	80

REINFORCEMENT COVER REQUIREMENTS

LOCATION	COVER (IN)
CONCRETE CAST AGAINST EARTH	3
CONCRETE CAST IN FORMS, EXPOSED TO WEATHER OR EARTH	2

DIVISION 4 - MASONRY

1. CONCRETE MASONRY UNITS SHALL MEET ASTM SPECIFICATION C90, GRADE N TYPE 1 BLOCK WITH A MINIMUM UNIT COMPRESSIVE STRENGTH OF 1900 PSI. THE SPECIFIED DESIGN COMPRESSIVE STRENGTH OF THE CONCRETE MASONRY ASSEMBLY IS SHALL BE 1,500 PSI.
2. MORTAR SHALL MEET ASTM SPECIFICATION C270 FOR TYPE "S" MORTAR.
3. GROUT SHALL MEET ASTM SPECIFICATION C476 AND HAVE A MINIMUM 28 DAY COMPRESSIVE STRENGTH OF 2,000 PSI.
4. GROUT PLACED BY THE LOW LIFT GROUTING METHOD SHALL BE MECHANICALLY CONSOLIDATED USING A VIBRATOR WITH A MAXIMUM 3/4 INCH DIAMETER HEAD.
5. HORIZONTAL JOINT REINFORCEMENT SHALL BE LADDER TYPE (REFERENCE SPECIFICATION). JOINT REINFORCEMENT SHALL BE SPACED AT 8 INCHES ON CENTER BELOW FINISHED FLOOR AND IN PARAPETS, AND 16 INCHES ON CENTER ABOVE FINISHED FLOOR.
6. CONCRETE MASONRY SHALL BE LAID IN RUNNING BOND.
7. CONCRETE MASONRY BELOW FINISHED FLOOR SHALL BE NORMAL WEIGHT UNITS AND SHALL HAVE ALL THE CELLS FULLY GROUTED. CONCRETE MASONRY ABOVE FINISHED FLOOR SHALL BE MEDIUM WEIGHT OR LIGHT WEIGHT AND IS TO BE GROUTED AT REINFORCED CELLS AND BOND BEAMS. ALL CELLS WITH REINFORCING SHALL BE GROUTED SOLID.
8. REFER TO WALL SECTIONS AND DETAILS FOR MISCELLANEOUS BOND BEAM LOCATIONS AND EMBEDDED ITEMS. USE OPEN KNOCK OUT BOND BEAM BLOCK. DO NOT USE THROUGH TYPE BLOCKS FOR BOND BEAMS. DO NOT CONTINUE BOND BEAM REINFORCING THROUGH CONTROL JOINTS.
9. REINFORCING STEEL SHALL MEET ASTM SPECIFICATION A615, GRADE 60.
10. ANCHORS INSTALLED IN GROUT FILLED CONCRETE MASONRY UNITS SHALL BE USED WHERE SPECIFIED ON THE DRAWINGS. ANCHORS MUST BE INSTALLED IN ACCORDANCE WITH THE MANUFACTURER'S PUBLISHED INSTALLATION INSTRUCTIONS. USE HILTI HY-270 ADHESIVE ANCHORING SYSTEM OR HILTI KWIK BOLT 3 EXPANSION ANCHOR. REFERENCE DETAILS FOR ANCHOR SIZE AND EMBEDMENT. SUBSTITUTIONS TO THE SPECIFIED ANCHORS MUST BE APPROVED BY THE ENGINEER OF RECORD.
11. CONSTRUCTION BRACING FOR MASONRY WALLS SHALL BE DESIGNED AND DETAILED BY A PROFESSIONAL ENGINEER LICENSED IN THE STATE WHERE THE PROJECT IS LOCATED.

BRICK LINTEL SCHEDULE

TYPE	CLEAR SPANS (S)	ANGLE SIZE	BEARING (EACH END)
A	S ≤ 4'-0"	L4x4x3/8	8"
B	4'-0" < S ≤ 7'-0"	L6x4x3/8	8"

DIVISION 6 - WOOD FRAMING

1. ALL WOOD PLATES BEARING ON CONCRETE OR MASONRY SHALL BE PRESSURE TREATED LUMBER.
2. ALL METAL CONNECTORS SHALL MEET THE FOLLOWING:
   A. CLIPS AND FASTENERS SHALL BE CORROSION RESISTANT.
   B. RATED TO PROVIDE LOAD RESISTANCE EQUAL TO CLIP SHOWN ON THE PLANS.
   C. APPROVED BY I.C.C. AND OTHER REQUIRED LOCAL CODE AGENCIES.
   D. INSTALLED AS RECOMMENDED BY THEIR MANUFACTURER.
3. ALL WOOD TRUSSES OR JOIST AND RAFTERS SHALL BE FASTENED TO TOP PLATE WITH ONE (1) SIMPSON H3 AND ONE (1) SIMPSON A34 METAL CLIP OR APPROVED EQUAL, UNO.
4. FOLLOW MANUFACTURER'S RECOMMENDATIONS FOR FASTENING OF HANGERS IN ORDER TO ACHIEVE THE REQUIRED ALLOWABLE LOADS SHOWN ON THE PLANS. WHERE REQUIRED ALLOWABLE LOADS ARE NOT SHOWN, USE THE MAXIMUM RATED STRENGTH OF THE HANGER.
5. WHEN CONNECTORS ARE NOT SHOWN, TABLE 2304.10.1 FASTENING SCHEDULE OF THE INTERNATIONAL BUILDING CODE SHALL APPLY.
6. WHEN HEADERS ARE NOT SHOWN, TABLE 2308.4.1 HEADER DESIGN CHART OF THE INTERNATIONAL BUILDING CODE SHALL APPLY.
7. PROVIDE SUPPLEMENTAL STRUCTURAL FRAMING AND BLOCKING AS REQUIRED TO ACHIEVE SOLID AND SOUND STRUCTURAL AND NON-STRUCTURAL ELEMENTS USING ACCEPTED FRAMING PRACTICES.
8. MINIMUM WOOD FRAMING MATERIAL SPECIFICATIONS ARE AS FOLLOWS:
   A. FRAMING 2-4 INCHES THICK, 2 INCHES AND WIDER, DOUGLAS FIR SOUTH #2
      1. Fb = 850 PSI (SINGLE MEMBER USE)
      2. Ft = 525 PSI
      3. Fc = 1350 PSI (PARALLEL TO GRAIN)
      4. Fc = 520 PSI (PERPENDICULAR TO GRAIN)
      5. Fv = 180 PSI
      6. E = 1,200,000 PSI
   B. FRAMING 5"x5" AND LARGER, BEAMS AND STRINGERS, DOUGLAS FIR SOUTH #2
      1. Fb = 825 PSI
      2. Ft = 425 PSI
      3. Fc = 550 PSI (PARALLEL TO GRAIN)
      4. Fc = 520 PSI (PERPENDICULAR TO GRAIN)
      5. Fv = 165 PSI
      6. E = 1,000,000 PSI
   C. FRAMING 5"x5" AND LARGER, POSTS AND TIMBERS, DOUGLAS FIR SOUTH #2
      1. Fb = 675 PSI
      2. Ft = 450 PSI
      3. Fc = 650 PSI (PARALLEL TO GRAIN)
      4. Fc = 520 PSI (PERPENDICULAR TO GRAIN)
      5. Fv = 165 PSI
      6. E = 1,000,000 PSI

DIVISION 6 - WOOD ROOF SHEATHING

1. ALL ROOF SHEATHING SHALL BE PLACED IN SUCH A MANNER TO STAGGER ALL END JOINTS OF PANELS AND WITH LONG DIRECTION PERPENDICULAR TO SUPPORTS. ALUMINUM PANEL CLIPS SHALL BE PLACED AT MID-SPAN OF PANELS BETWEEN EACH TRUSS AS DECKING IS BEING LAID. INSTALLER SHALL LEAVE 1/8" SPACE AT ALL PANEL EDGES AND END JOINTS, UNLESS OTHERWISE RECOMMENDED BY MANUFACTURER.
2. FASTENING REQUIREMENTS FOR DECKING TO SUPPORTS SHALL BE IN COMPLIANCE WITH THE AMERICAN PLYWOOD ASSOCIATION'S (APA) RECOMMENDED MINIMUM FASTENING SCHEDULE FOR APA PANEL ROOF (OR WALL) SHEATHING AS STATED HEREIN. SEE ROOF FRAMING PLAN (S-201) FOR ROOF SHEATHING FASTENING REQUIREMENTS. CLIPS AND FASTENERS SHALL BE CORROSION RESISTANT.
3. COVER SHEATHING AS SOON AS POSSIBLE WITH ROOFING FELT FOR PROTECTION AGAINST EXCESSIVE MOISTURE PRIOR TO ROOFING APPLICATION. PROTECTION MATERIAL MUST BE APPROVED BY I.C.C. AND FOLLOW OTHER REQUIRED LOCAL CODE AGENCIES.
4. UNLESS NOTED OTHERWISE, PLYWOOD STRUCTURAL PANELS NOTED ON THE DRAWINGS SHALL CONFORM TO U.S. DEPARTMENT OF COMMERCE VOLUNTARY PRODUCT STANDARDS, PS 1, STRUCTURAL PLYWOOD (DOC PS 1), OR PS 2, PERFORMANCE STANDARD FOR WOOD-BASED STRUCTURAL-USE PANELS (DOC PS 2), AND TO BE IDENTIFIED BY THE MARK OF AN APPROVED TESTING AND GRADING AGENCY.

SUBMITTALS

1. TRANSMIT SUBMITTALS SUFFICIENTLY IN ADVANCE OF RELATED CONSTRUCTION ACTIVITIES TO AVOID UNNECESSARY DELAY. THE STRUCTURAL ENGINEER OF RECORD MAY WITHHOLD ACTION ON A SUBMITTAL REQUIRING COORDINATION WITH OTHER SUBMITTALS UNTIL ALL RELATED SUBMITTALS ARE RECEIVED.
2. THE GENERAL CONTRACTOR SHALL SUBMIT ONE ELECTRONIC PORTABLE DOCUMENT FORMAT (PDF) COPY OF ALL REQUIRED SUBMITTALS THROUGH THE ARCHITECT FOR REVIEW. THE ELECTRONIC COPY WILL BE MARKED UP BY THE STRUCTURAL ENGINEER OF RECORD. ONE COPY WILL BE KEPT BY THE STRUCTURAL ENGINEER OF RECORD AND AN ADDITIONAL COPY WILL BE RETURNED TO THE ARCHITECT. THE ARCHITECT WILL KEEP ONE COPY AND RETURN A COPY TO THE CONTRACTOR. THE CONTRACTOR WILL MAKE ADDITIONAL COPES AS REQUIRED.
3. THE GENERAL CONTRACTOR SHALL SUBMIT, FOR ENGINEER REVIEW, SHOP DRAWINGS FOR THE FOLLOWING ITEMS:
   A. CONCRETE MIX DESIGNS (3)
   B. CONSTRUCTION JOINT LOCATIONS IN STRUCTURAL FLOORS, WALLS AND SLABS-ON-GRADE.
   C. MISCELLANEOUS STEEL
   D. REINFORCING STEEL
   E. TIMBER TRUSS CONNECTIONS AND FRAMING ATTACHMENTS (1, 4)
      NOTES:
      1. SHALL BE SEALED BY A REGISTERED PROFESSIONAL ENGINEER IN THE STATE WHERE THE PROJECT IS LOCATED PER THE PROJECT SPECIFICATIONS
      2. SHALL BE SUBMITTED TO THE ENGINEER FOR RECORD ONLY AND WILL NOT RECEIVE THE ENGINEER'S SHOP DRAWING STAMP
      3. SHALL BE SUBMITTED TO THE ENGINEER AND THE OWNER'S TESTING AGENCY FOR REVIEW
      4. ITEM IS A DEFERRED SUBMITTAL WHICH HAS NOT BEEN COMPLETE AND IS TO BE SUBMITTED TO THE BUILDING OFFICIAL AND APPROVED PRIOR TO INSTALLATION. THE MANUFACTURER, CONSULTANT, OR CONTRACTOR, AS APPROPRIATE SHALL PROVIDE SUBMITTALS TO THE ENGINEER OF RECORD FOR REVIEW.
4. ALL SHOP DRAWINGS MUST BE REVIEWED AND ELECTRONICALLY STAMPED BY THE GENERAL CONTRACTOR PRIOR TO SUBMITTAL.

360 Engineering Group, PLLC
www.360enggroup.com
1201 East 3rd Street
Tulsa, OK 74120
918.518.1124

Certificate of Authorization:
OK #5996 | EXP 6.30.2020

Landscape Architects
howell & vancuren
601 S. Lewis Ave, Tulsa, OK 74104
918.592.1270 | howellvancuren.com

Architects
INTEGRATED ARCHITECTURE
P.O. Box 7806, Edmond, OK 73083
405.509.7800 | integratedarc.com

Civil Engineers
wallace
410 N. Walnut Ave. Ste 200, Oklahoma City, OK 73104
405.236.5858 | wallacesc.com

Electrical Engineers
HP ENGINEERING
205 NW 63rd Street, Oklahoma City, OK 73116
405.286.9945 | hpengineeringinc.com

Graphic Design
Hoffer Waska creative
1443 S. Norfolk Ave, Tulsa, OK 74120
281.704.9729 |

City of Norman

RUBY GRANT PARK

3110 WEST FRANKLIN ROAD
NORMAN, OKLAHOMA 73072

REVISIONS:

PROFESSIONAL SEAL:

LICENSED PROFESSIONAL ENGINEER
ELIAS R. JOHANNSON
21349
OKLAHOMA
06.14.19

ISSUE DATE:
June 14, 2019

CONSTRUCTION DOCUMENTS

DRAWN BY: JR CHECKED BY: RM

SHEET NAME:
GENERAL NOTES

SHEET NUMBER:
S001 A

DRAWING IS NOT TO SCALE UNLESS PRINTED ON SHEET SIZE: 22"x34" (ANSI D)

GENERAL NOTES

SPECIAL INSPECTIONS

1. SPECIAL INSPECTION SHALL BE PROVIDED BY THE OWNER ACCORDING TO SECTION 1705 OF IBC 2015. THE APPROVED SPECIAL INSPECTOR SHALL DEMONSTRATE COMPETENCE FOR INSPECTION OF THE PARTICULAR TYPE OF CONSTRUCTION OR OPERATION REQUIRING SPECIAL INSPECTION. THE SPECIAL INSPECTOR SHALL SEND REPORTS TO THE OWNER, THE BUILDING OFFICIAL, THE ARCHITECT, THE STRUCTURAL ENGINEER OF RECORD, AND TO THE CONTRACTOR. THE SPECIAL INSPECTOR SHALL BRING NON-CONFORMING ITEMS TO THE IMMEDIATE ATTENTION OF THE CONTRACTOR AND NOTE ALL SUCH ITEMS IN THE REPORTS. ANY UNRESOLVED ITEM ABOUT THE COVERED WORK SHALL BE BROUGHT TO THE ATTENTION OF THE OWNER'S CONSTRUCTION MANAGER AS WELL AS THE ARCHITECT AND STRUCTURAL ENGINEER OF RECORD. THE SPECIAL INSPECTOR SHALL SUBMIT A FINAL SIGNED REPORT STATING WHETHER OR NOT THE WORK REQUIRING SPECIAL INSPECTION WAS, TO THE BEST OF THE INSPECTOR'S KNOWLEDGE, IN CONFORMANCE WITH THE APPROVED PLANS AND SPECIFICATIONS. THE CONTRACTOR IS RESPONSIBLE FOR NOTIFYING THE SPECIAL INSPECTION AGENCY REGARDING INDIVIDUAL INSPECTIONS FOR ITEMS LISTED ON THE SCHEDULE AND AS NOTED ON THE BUILDING DEPARTMENT APPROVED PLANS. ADEQUATE NOTICE AND ACCESS TO APPROVED PLANS SHALL BE PROVIDED SO THAT THE SPECIAL INSPECTOR HAS TIME TO BECOME FAMILIAR WITH THE PROJECT.
2. SEE ARCHITECTURAL, MECHANICAL, ELECTRICAL, AND PLUMBING CONSTRUCTION DOCUMENTS FOR ADDITIONAL NON-STRUCTURAL SPECIAL INSPECTION ITEMS.
3. IN ACCORDANCE WITH IBC CHAPTER 17, THE FOLLOWING TYPES OF WORK REQUIRE SPECIAL INSPECTIONS AND TESTING:

SPECIAL INSPECTION AND VERIFICATION OF CONCRETE CONSTRUCTION
REFERENCE IBC 2015, TABLE 1705.3

VERIFICATION AND INSPECTION TASK	CONTINUOUS	PERIODIC
INSPECT REINFORCEMENT, INCLUDING PRESTRESSING TENDONS, AND VERIFY PLACEMENT	--	X
REINFORCING BAR WELDING: A. VERIFY WELDABILITY OF REINFORCING BARS OTHER THAN ASTM A706 B. INSPECT SINGLE-PASS FILLET WELDS, MAXIMUM 5/16" C. INSPECT ALL OTHER WELDS	 -- -- X	 X X --
INSPECT ANCHORS CAST IN CONCRETE	X	--
INSPECTION OF ANCHORS POST-INSTALLED IN HARDENED CONCRETE MEMBERS. A. ADHESIVE ANCHORS INSTALLED IN HORIZONTALLY OR UPWARDLY INCLINED ORIENTATIONS TO RESIST SUSTAINED TENSION LOADS. B. MECHANICAL ANCHORS AND ADHESIVE ANCHORS NOT DEFINED IN A	 X --	 -- X
VERIFY USE OF REQUIRED DESIGN MIX.	--	X
PRIOR TO CONCRETE PLACEMENT, FABRICATE SPECIMENS FOR STRENGTH TESTS, PERFORM SLUMP AND AIR TESTS, AND DETERMINE THE TEMPERATURE OF THE CONCRETE.	X	--
INSPECTION OF CONCRETE AND SHOTCRETE PLACEMENT FOR PROPER APPLICATION TECHNIQUES.	X	--
VERIFY MAINTENANCE OF SPECIFIED CURING TEMPERATURE AND TECHNIQUES.	--	X
INSPECT PRESTRESSED CONCRETE FOR: A. APPLICATION OF PRESTRESSING FORCES B. GROUTING OF BONDED PRESTRESSING TENDONS	 X X	 -- --
INSPECT ERECTION OF PRECAST CONCRETE MEMBERS.	--	X
VERIFY IN-SITU CONCRETE STRENGTH, PRIOR TO STRESSING TENDONS IN POST-TENSIONED CONCRETE AND PRIOR TO REMOVAL OF SHORES AND FORMS FROM BEAMS AND STRUCTURAL SLABS.	--	X
INSPECT FORMWORK FOR SHAPE, LOCATION AND DIMENSIONS OF THE CONCRETE MEMBER BEING FORMED.	--	X

SPECIAL INSPECTION AND VERIFICATION OF SOILS
REFERENCE IBC 2015, TABLE 1705.6

VERIFICATION AND INSPECTION TASK	CONTINUOUS	PERIODIC
VERIFY MATERIALS BELOW SHALLOW FOUNDATIONS ARE ADEQUATE TO ACHIEVE THE DESIGN BEARING CAPACITY.	--	X
VERIFY EXCAVATIONS ARE EXTENDED TO PROPER DEPTH AND HAVE REACHED PROPER MATERIAL.	--	X
PERFORM CLASSIFICATION AND TESTING OF COMPACTED FILL MATERIALS.	--	X
VERIFY USE OF PROPER MATERIALS, DENSITIES AND LIFT THICKNESS DURING PLACEMENT AND COMPACTION OF COMPACTED FILL.	X	--
PRIOR TO PLACEMENT OF COMPACTED FILL, OBSERVE SUBGRADE AND VERIFY THAT SITE HAS BEEN PREPARED PROPERLY.	--	X

SPECIAL INSPECTIONS CONTINUED

LEVEL B SPECIAL INSPECTION AND VERIFICATION OF MASONRY CONSTRUCTION
REFERENCE TMS 402-13, TABLE 3.1.2

VERIFICATION AND INSPECTION TASK	CONTINUOUS	PERIODIC
VERIFICATION OF SLUMP FLOW AND VSI AS DELIVERED TO THE SITE IN ACCORDANCE WITH SPECIFICATION ARTICLE 1.5B.1.b.3 FOR SELF-CONSOLIDATING GROUT.	--	X
VERIFICATION OF f'm AND f'aac PRIOR TO CONSTRUCTION EXCEPT WHERE SPECIFICALLY EXEMPTED BY TMS 402-13.	--	X
VERIFY COMPLIANCE WITH THE APPROVED SUBMITTALS	--	X
AS MASONRY CONSTRUCTION BEGINS, VERIFY THAT THE FOLLOWING ARE IN COMPLIANCE: A. PROPORTIONS OF SITE-PREPARED MORTAR B. CONSTRUCTION OF MORTAR JOINTS C. GRADE AND SIZE OF PRESTRESSING TENDONS AND ANCHORAGES D. LOCATION OF REINFORCEMENT, CONNECTORS, AND PRESTRESSING TENDONS AND ANCHORAGES E. PRESTRESSING TECHNIQUE F. PROPERTIES OF THIN-BED MORTAR FOR AAC MASONRY	 -- -- -- -- -- X[1]	 X X X X X X[2]
PRIOR TO GROUTING, VERIFY THAT THE FOLLOWING ARE IN COMPLIANCE: A. GROUT SPACE B. GRADE, TYPE, AND SIZE OF REINFORCEMENT AND ANCHOR BOLTS, AND PRESTRESSING TENDONS AND ANCHORAGES C. PLACEMENT OF REINFORCEMENT, CONNECTORS, AND PRESTRESSING TENDONS AND ANCHORAGES D. PROPORTIONS OF SITE-PREPARED GROUT AND PRESTRESSING GROUT FOR BONDED TENDONS E. CONSTRUCTION OF MORTAR JOINTS	 -- -- -- -- --	 X X X X X
VERIFY DURING CONSTRUCTION: A. SIZE AND LOCATION OF STRUCTURAL ELEMENTS B. TYPE, SIZE, AND LOCATION OF ANCHORS, INCLUDING OTHER DETAILS OF ANCHORAGE OF MASONRY TO STRUCTURAL MEMBERS, FRAMES, OR OTHER CONSTRUCTION C. WELDING OF REINFORCEMENT D. PREPARATION, CONSTRUCTION, AND PROTECTION OF MASONRY DURING COLD WEATHER (TEMPERATURE BELOW 40°F (4.4°C)) OR HOT WEATHER (TEMPERATURE ABOVE 90°F (32.2°C)) E. APPLICATION AND MEASUREMENT OF PRESTRESSING FORCE F. PLACEMENT OF GROUT AND PRESTRESSING GROUT FOR BONDED TENDONS IS IN COMPLIANCE G. PLACEMENT OF AAC MASONRY UNITS AND CONSTRUCTION OF THIN-BED MORTAR JOINTS	 -- -- X -- X X X[1]	 X X -- X -- -- X[2]
OBSERVE PREPARATION OF GROUT SPECIMENS, MORTAR SPECIMENS, AND/OR PRISMS	--	X

1. REQUIRED FOR THE FIRST 5000 SQUARE FEET OF AAC MASONRY.
2. REQUIRED AFTER THE FIRST 5000 SQUARE FEET OF AAC MASONRY.

DIVISION 5 - COLD-FORMED METAL FRAMING

1. ALL METAL STUDS, JOISTS AND TRACK SHALL MEET THE FOLLOWING MINIMUM GROSS STRUCTURAL PROPERTIES BASED ON SSMA (ER #4943P) SECTIONS. YIELD STRENGTH SHALL BE AS FOLLOWS: 33 KSI FOR 18 GAGE AND LIGHTER, 50 KSI FOR 16 GAGE AND HEAVIER.
2. DO NOT WELD 20 GAGE AND LIGHTER FRAMING, UNLESS SPECIFICALLY CALLED FOR IN PLANS AND DETAILS.
3. MINIMUM WIDTH OF THE STUDS SHALL BE 1 5/8", AND THE LIP OF THE "C" PORTION SHALL BE A MINIMUM OF 1/2".
4. STUD TRACK SHALL BE 18 GA. MINIMUM FOR WALL STUDS 18 GA. OR LIGHTER. STUD TRACK SHALL MATCH WALL STUD GAGE FOR WALL STUDS 16 GA. AND HEAVIER. TRACKS SHALL BE ANCHORED AS FOLLOWS UNO:
   - TO STEEL - HILTI X-S16 P8TH, 0.145" DIA. PAF AT 16" OC.
   - TO CONCRETE - HILTI X-U, 0.157" DIA PAF AT 16" OC WITH 1 1/4" EMBEDMENT.
5. STEEL STUDS SHALL BE INSTALLED IN ACCORDANCE WITH THE MANUFACTURER'S RECOMMENDATIONS. HORIZONTAL BRIDGING SHALL BE PLACED AT 4'-0" OC, OR AS PER MANUFACTURER'S RECOMMENDATION IF LESS THAN 4'-0" OC.
6. ALL AXIALLY LOADED STUDS SHALL HAVE FULL FLANGE BEARING AGAINST UPPER AND LOWER TRACK WEB PRIOR TO ATTACHMENT TO TRACK. SPLICES IN AXIALLY LOADED STUDS ARE NOT PERMITTED.
7. PROVIDE FULL DEPTH BLOCKING BETWEEN JOISTS AT SUPPORTS WHERE JOISTS ARE NOT OTHERWISE RESTRAINED FROM ROTATION, AND AS INDICATED IN THE SECTIONS.
8. JOISTS SHALL BE PLACED DIRECTLY OVER BEARING STUDS AND JOIST WEB STIFFENERS SHALL BE PROVIDED AT ALL REACTION POINTS AND AS OTHERWISE SHOWN ON THE DRAWINGS.
9. JOIST BRIDGING SHALL BE INSTALLED PER MANUFACTURER'S RECOMMENDATIONS. JOIST BRIDGING SHALL BE INSTALLED AT 8'-0" OC MAXIMUM. APPLIED FINISH MATERIALS SHALL NOT BE CONSIDERED BRIDGING OR FLANGE BRACING, UNLESS NOTED OTHERWISE.
10. CONNECTIONS OF COLD-FORMED METAL FRAMING SHALL CONFORM TO THE FOLLOWING:
    A. ALL WELDED CONNECTIONS TO BE PERFORMED IN ACCORDANCE WITH THE LATEST VERSION OF AWS D1.3 "SPECIFICATIONS FOR WELDING SHEET STEEL STRUCTURES". CONSULT AWS D19.0 "WELDING ZINC COATED STEEL" & ANSI STANDARD Z49.1 FOR INFORMATION REGARDING SAFE WELDING PROCEDURES. WELDERS SHALL BE CERTIFIED FOR SHEET STEEL IN ALL POSITIONS REQUIRED PER AWS D1.3.
    B. ALL WELDS ARE TO BE TOUCHED-UP WITH A RUST INHIBITIVE GALVANIZING PAINT.
    C. SUGGESTED WELD METAL AND PROCESS FOR SHOP WELDING ARE: 60 KSI WELD METAL STRENGTH (MINIMUM) - MIG. SUGGESTED METHODS FOR FIELD WELDING: 1/8 INCH E60XX (MINIMUM) ELECTRODE - SMAW; OR "GASLESS" MIG. MINIMUM WELD THROAT THICKNESS (T) MUST MATCH OR EXCEED THE BASE STEEL THICKNESS OF THE THINNEST CONNECTED PART (U.N.O.)
    D. ALL SCREWS SHALL BE OF THE DIAMETER AND SIZE INDICATED ON THE DRAWINGS AND SHALL BE THOSE MANUFACTURED AND TESTED BY GRABBER, ITW BUILDEX, OR APPROVED EQUIVALENT. A MINIMUM OF (1.5 x) SCREW DIAMETER EDGE DISTANCE AND (3 x) SCREW DIAMETER SPACING IS REQUIRED (U.N.O.)
    E. SELECT SCREW WITH AN ADEQUATE CUTTING TIP TO ACCOMMODATE THE TOTAL THICKNESS TO BE DRILLED. DRILLING MUST BE COMPLETED BEFORE THE THREADS ENGAGE THE MATERIAL.
    F. CONNECTIONS NOT FULLY DETAILED ON THE CONTRACT DOCUMENTS SHALL BE DESIGNED BY THE CONTRACTOR PER THE SPECIFICATION.
11. TORCH CUTTING OF COLD-FORMED METAL FRAMING MEMBERS IS NOT PERMITTED.
12. ROOF AND FLOOR JOISTS MUST ALIGN DIRECTLY OVER STUDS (U.N.O.).
13. PER AISI S200, THE MAXIMUM ALLOWABLE GAP (MEASURED BETWEEN THE WEB OF THE STUD AND THE WEB OF THE TRACK) FOR A STUD SEATED IN A TRACK IS 1/4" FOR NON-AXIAL LOAD BEARING CONDITIONS AND 1/8" FOR AXIALLY LOAD BEARING CONDITIONS (U.N.O.). PRESSURE SHALL BE APPLIED TO NEST STUDS INTO THE TRACKS UNTIL THESE TOLERANCES ARE ACHIEVED.
14. PRODUCT IDENTIFICATION:
    A. THE AMERICAN IRON AND STEEL INSTITUTE STANDARDS ARE USED IN THESE DOCUMENTS. ANY MANUFACTURER WHOSE PRODUCT GEOMETRIES MEET OR EXCEED AISI STANDARDS ARE ACCEPTABLE.
    B. IDENTIFICATION:

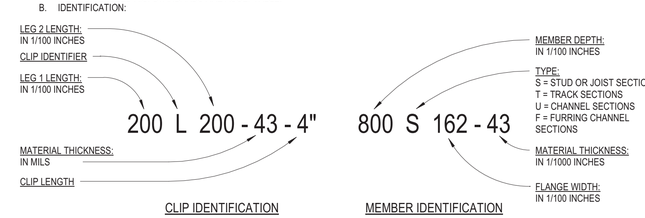

CLIP IDENTIFICATION MEMBER IDENTIFICATION

MINIMUM THICKNESS

GAUGE	DESIGN	MINIMUM	AISI	COLOR
20	0.0346"	0.0329"	33 MILS	WHITE
18	0.0451"	0.0428"	43 MILS	YELLOW
16	0.0566"	0.0538"	54 MILS	GREEN
14	0.0713"	0.0677"	68 MILS	ORANG
12	0.1017"	0.0966"	97 MILS	RED

360 Engineering Group, PLLC
www.360enggroup.com
1201 East 3rd Street
Tulsa, OK 74120
918.518.1124

Certificate of Authorization:
OK #5996 | EXP 6.30.2020

Landscape Architects
howell & vancuren
601 S. Lewis Ave, Tulsa, OK 74104
918.592.1270 | howellvancuren.com

Architects
INTEGRATED ARCHITECTURE
P.O. Box 7806, Edmond, OK 73083
405.509.7800 | integratedarc.com

Civil Engineers
wallace
410 N. Walnut Ave. Ste 200, Oklahoma City, OK 73104
405.236.5858 | wallacesc.com

Electrical Engineers
HP ENGINEERING
205 NW 63rd Street, Oklahoma City, OK 73116
405.286.9945 | hpengineeringinc.com

Graphic Design
Hoffer Waska creative
1443 S. Norfolk Ave, Tulsa, OK 74120
281.704.9729 |

City of Norman
RUBY GRANT PARK
3110 WEST FRANKLIN ROAD
NORMAN, OKLAHOMA 73072

REVISIONS:

PROFESSIONAL SEAL:

ISSUE DATE:
June 14, 2019

CONSTRUCTION DOCUMENTS

DRAWN BY: JR CHECKED BY: RM

SHEET NAME:
SPECIAL INSPECTIONS

SHEET NUMBER:
S002 A

DRAWING IS NOT TO SCALE UNLESS PRINTED ON SHEET SIZE: 22"x34" (ANSI D)

ROOF FRAMING PLAN NOTES

1. RE: SHEET S001 FOR GENERAL NOTES.
2. RE: ARCHITECTURAL PLANS FOR DIMENSIONS NOT SHOWN.
3. RE: MECHANICAL AND ARCHITECTURAL DRAWINGS FOR SIZES AND LOCATION OF PENETRATIONS NOT INDICATED ON STRUCTURAL DRAWINGS.
4. FASTEN ROOF TRUSSES AT ALL BEARING POINTS W/ (1)-SIMPSON H2.5A STRAP TYP, UNO.
5. ALL FRAMING MEMBERS TO BEAR ON TOP OF COLUMNS/WALLS TYP, UNO.
6. ALL ROOF DECKING SHALL BE 3" DOUGLAS FIR, LARCH, OR SOUTHERN PINE LOCK-DECK SPANNING BETWEEN TRUSSES. ATTACH TO TRUSSES PER MANUFACTURER RECOMMENDATIONS, UNO.
7. ROOF SHEATHING SHALL BE APA RATED EXPOSURE 1 SHEATHING WITH A MINIMUM THICKNESS OF 19/32", DOC PS-1 OR PS-2, WITH A SPAN RATING OF AT LEAST 32/16 NAILED WITH 8d GALVANIZED COMMON NAILS AT 6" OC AT PANEL EDGES AND AT 12" OC AT INTERMEDIATE SUPPORTS TYP, UNO.
8. REFER TO ARCH FOR DECORATIVE BRACES AND ACCENTS.

FOUNDATION PLAN NOTES

1. RE: SHEET S001 FOR GENERAL NOTES.
2. RE: ARCHITECTURAL PLANS FOR DIMENSIONS NOT SHOWN. COORDINATE SLAB ELEVATIONS AND SLOPES WITH ARCHITECTURAL PLANS.
3. RE: MECHANICAL AND ARCHITECTURAL DRAWINGS FOR SIZES AND LOCATION OF PENETRATIONS NOT INDICATED ON STRUCTURAL DRAWINGS.
4. CONTRACTOR SHALL PROVIDE POSITIVE DRAINAGE DURING CONSTRUCTION FOR THE SLAB AREA. SLAB SUBGRADE SHALL NOT BE ALLOWED TO RETAIN WATER DURING CONSTRUCTION.
5. RE: SHEET S501 FOR REINFORCEMENT AT RE-ENTRANT CORNERS AND DISCONTINUOUS JOINTS.
6. FLOOR REFERENCE ELEVATIONS VARY, SEE ARCH. FOR FLOOR SLOPES AND DIRECTIONS. TYPICAL FLOOR SLAB SHALL BE 4" THICK CONCRETE SLAB-ON-GRADE MINIMUM REINFORCED WITH #4 AT 16" OC EACH WAY OVER 4" GRANULAR BASE COURSE OVER APPROVED LOW VOLUME CHANGE ENGINEERED FILL PER THE GEOTECHNICAL REPORT.
7. CENTER FOOTING BENEATH COLUMN AND LOAD BEARING WALLS SHOWN.
8. CONTROL JOINTS SHOULD NOT BE SPACED MORE THAN 15'-0" OC, AND THE PANELS SO FORMED BY THE CONTROL JOINTS SHOULD NOT EXCEED A LENGTH TO WIDTH RATIO OF 1.5.
9. T.O. EXTERIOR FTG = 99'-4" UNO.

CONTINUOUS FOOTING SCHEDULE

MARK	SIZE (WxDxL)	REINFORCEMENT
CF18	1'-6"x1'-6"	(2)-#5 CONT BOTTOM W/ #3 TIES AT 16" OC
CF30	2'-6"x1'-6"	(3)-#5 CONT BOTTOM W/ #3 TIES AT 16" OC

ISOLATED FOOTING SCHEDULE

MARK	SIZE (LxWxD)	REINFORCEMENT
F48	4'-0"x4'-0"x2'-0"	(7)-#5 BOT BARS, EW
F66	5'-6"x5'-6"x2'-0"	(10)-#5 TOP AND BOT BARS, EW
F144-108	12'-0"X9'-0"X2'-0"	#5 AT 12" OC BOT BARS, EW

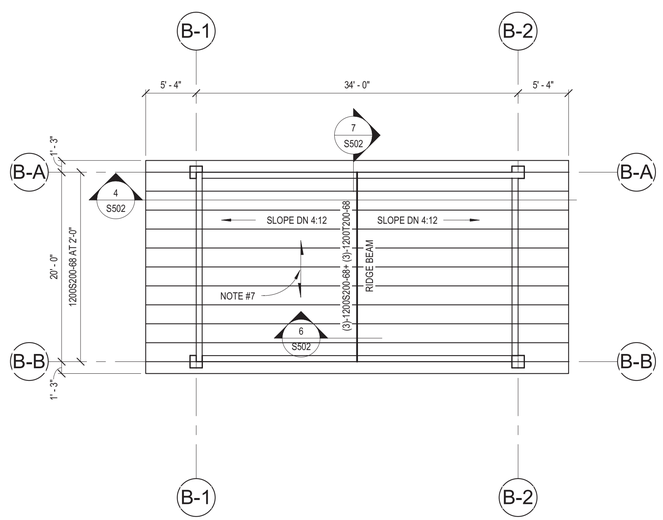

2 ROOF FRAMING PLAN - BATHROOM
1/8" = 1'-0"

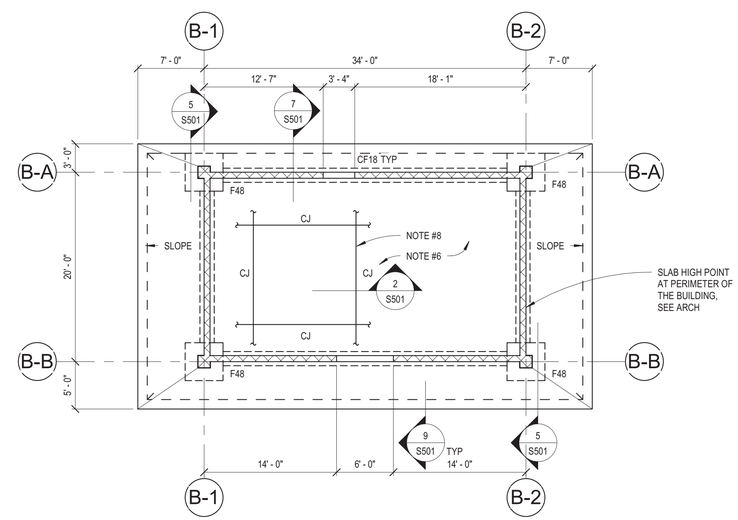

1 FOUNDATION PLAN - BATHROOMS
1/8" = 1'-0"

360 Engineering Group, PLLC
www.360enggroup.com
1201 East 3rd Street
Tulsa, OK 74120
918.518.1124
Certificate of Authorization:
OK #5996 | EXP 6.30.2020

Landscape Architects
howell & vancuren
601 S. Lewis Ave, Tulsa, OK 74104
918.592.1270 | howellvancuren.com

Architects
INTEGRATED ARCHITECTURE
P.O. Box 7806, Edmond, OK 73083
405.509.7800 | integratedarc.com

Civil Engineers
wallace
410 N. Walnut Ave. Ste 200, Oklahoma City, OK 73104
405.236.5858 | wallacesc.com

Electrical Engineers
HP ENGINEERING
205 NW 63rd Street, Oklahoma City, OK 73116
405.286.9945 | hpengineeringinc.com

Graphic Design
Hoffer Waska creative
1443 S. Norfolk Ave, Tulsa, OK 74120
281.704.9729 |

City of Norman
RUBY GRANT PARK
3110 WEST FRANKLIN ROAD
NORMAN, OKLAHOMA 73072

REVISIONS:

PROFESSIONAL SEAL:

LICENSED PROFESSIONAL ENGINEER
ELIAS R. JOHANNSSON
21349
OKLAHOMA
06.14.19

ISSUE DATE:
June 14, 2019

CONSTRUCTION DOCUMENTS

DRAWN BY: JR CHECKED BY: RM

SHEET NAME:
FOUNDATION AND FRAMING PLANS - BATHROOMS

SHEET NUMBER:
S101B A

DRAWING IS NOT TO SCALE UNLESS PRINTED ON SHEET SIZE: 22"x34" (ANSI D)

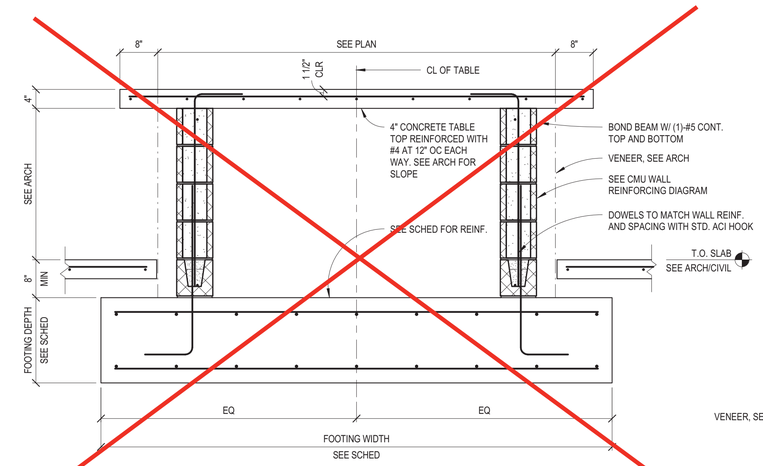

8 PAVILION TABLE
3/4" = 1'-0"

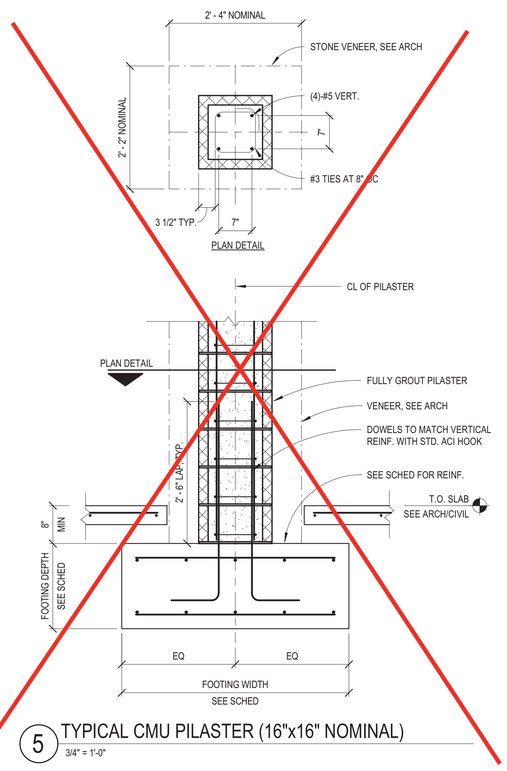

5 TYPICAL CMU PILASTER (16"x16" NOMINAL)
3/4" = 1'-0"

CMU LINTEL SCHEDULE

WIDTH	CLEAR SPAN	DEPTH	BOTTOM REINF.	TOP REINF.	JAMB REINF (EACH CELL)	JAMB WIDTH
8"	UP TO 6'-4"	16"	(1)-#5	--	(2)-#5	16"

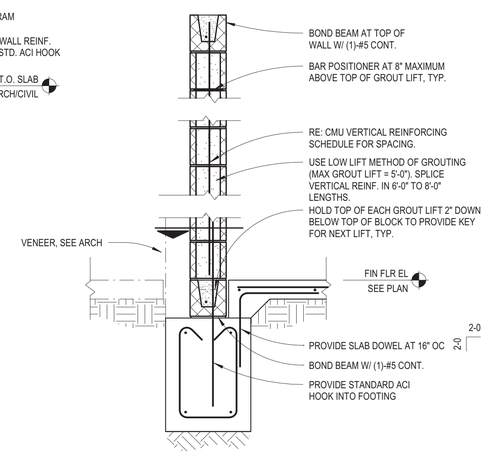

7 CMU WALL REINFORCING DIAGRAM
3/4" = 1'-0"

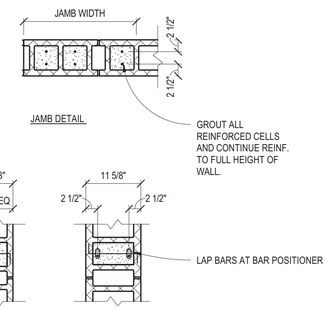

CMU VERTICAL REINFORCING SCHEDULE

8"	(1)-#5 VERT. AT 24" OC WITH (1)-#5 DOWEL @ 24" OC.

NOTES:
1. GROUT SOLID ALL CELLS WITH REINFORCING.
2. USE BOND BEAM BLOCKS WITH OPEN BOTTOMS ONLY AT BOND BEAM LOCATIONS. DO NOT USE THROUGH-TYPE BLOCKS AT BOND BEAMS.
3. DO NOT CONTINUE BOND BEAM REINFORCING THROUGH CONTROL JOINTS.
4. ALL MASONRY SHALL BE LAID IN RUNNING (COMMON) BOND.
5. REFER DETAILS FOR LOCATION OF ADDITIONAL BOND BEAMS WITH (1)-#5 CONTINUOUS.
6. PROVIDE (2)-#5 AT EACH LINTEL AND EXTEND 24" PAST OPENING.

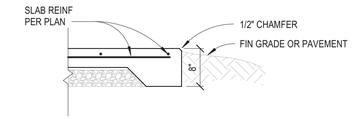

9 EXTERIOR SLAB EDGE
3/4" = 1'-0"

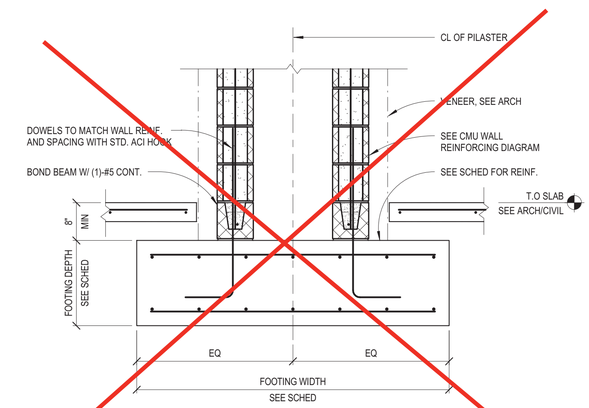

6 TYPICAL CMU CHIMNEY DETAIL
3/4" = 1'-0"

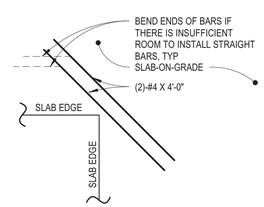

4 TYP RE-ENTRANT CORNER BAR
NO SCALE

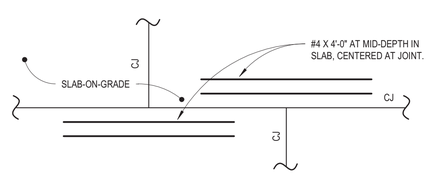

3 REINFORCING AT SLAB JOINT
NO SCALE

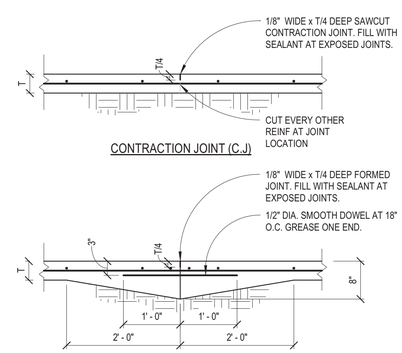

NOTES:
1. SEE FOUNDATION PLAN(S) FOR ADDITIONAL SLAB INFORMATION, INCLUDING DEPTH AND REINFORCING.
2. THE SAWCUTTING SHOULD BE DONE AS SOON AS THE CONCRETE HAS HARDENED SUFFICIENTLY TO PERMIT CUTTING W/O CHIPPING, SPALLING OR TEARING BUT NOT MORE THAN 8 HOURS AFTER CASTING.
3. DOWELS SHALL BE PARALLEL TO THE SLAB'S TOP SURFACE AND PERPENDICULAR TO THE SLAB JOINT. DOWELS SHALL BE A MINIMUM OF 6" FROM ANY SLAB EDGE.

2 JOINT DETAILS
NO SCALE

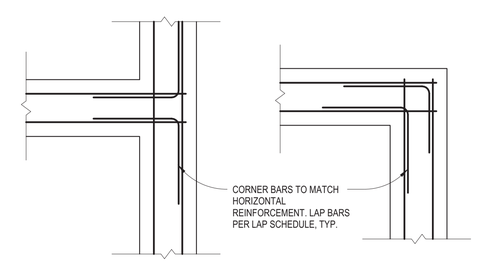

1 CORNER BAR DETAILS
NO SCALE

360 Engineering Group, PLLC
www.360engrgroup.com
1201 East 3rd Street
Tulsa, OK 74120
918.518.1124
Certificate of Authorization: OK #5996 | EXP 6.30.2020

Landscape Architects
howell & vancuren
601 S. Lewis Ave, Tulsa, OK 74104
918.592.1270 | howellvancuren.com

Architects
INTEGRATED ARCHITECTURE
P.O. Box 7806, Edmond, OK 73083
405.509.7800 | integratedarc.com

Civil Engineers
wallace
410 N. Walnut Ave. Ste 200, Oklahoma City, OK 73104
405.236.5858 | wallacesc.com

Electrical Engineers
HP ENGINEERING
205 NW 63rd Street, Oklahoma City, OK 73116
405.286.9945 | hpengineeringinc.com

Graphic Design
Hoffer Waska creative
1443 S. Norfolk Ave, Tulsa, OK 74120
281.704.9729 |

City of Norman
RUBY GRANT PARK
3110 WEST FRANKLIN ROAD
NORMAN, OKLAHOMA 73072

REVISIONS:

PROFESSIONAL SEAL:
LICENSED PROFESSIONAL ENGINEER
ELIAS R. JOHANNSSON
21349
06.14.19

ISSUE DATE:
June 14, 2019

CONSTRUCTION DOCUMENTS

DRAWN BY: JR CHECKED BY: RM

SHEET NAME:
FOUNDATION DETAILS

SHEET NUMBER:
S501A

DRAWING IS NOT TO SCALE UNLESS PRINTED ON SHEET SIZE: 22"x34" (ANSI D)

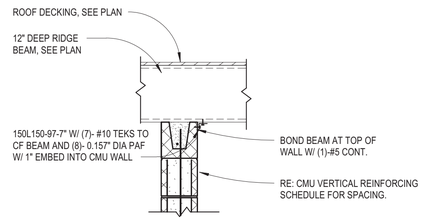

7 FRAMING DETAIL
3/4" = 1'-0"

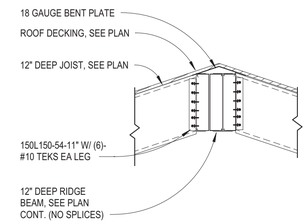

6 FRAMING DETAIL
3/4" = 1'-0"

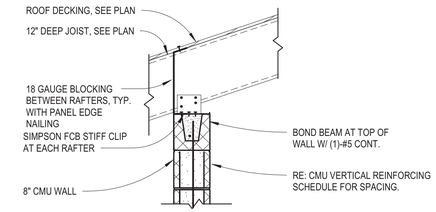

5 FRAMING DETAIL
3/4" = 1'-0"

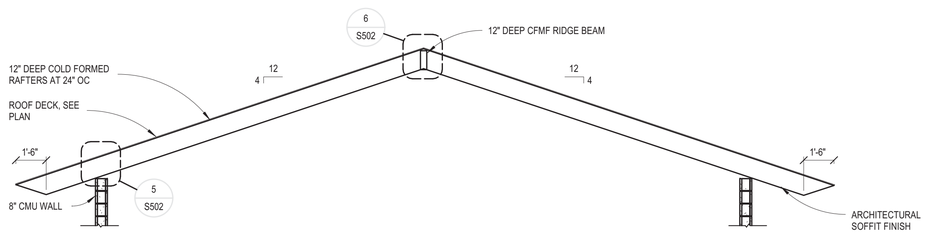

4 FRAMING ELEVATION AT BATHROOM
1/4" = 1'-0"

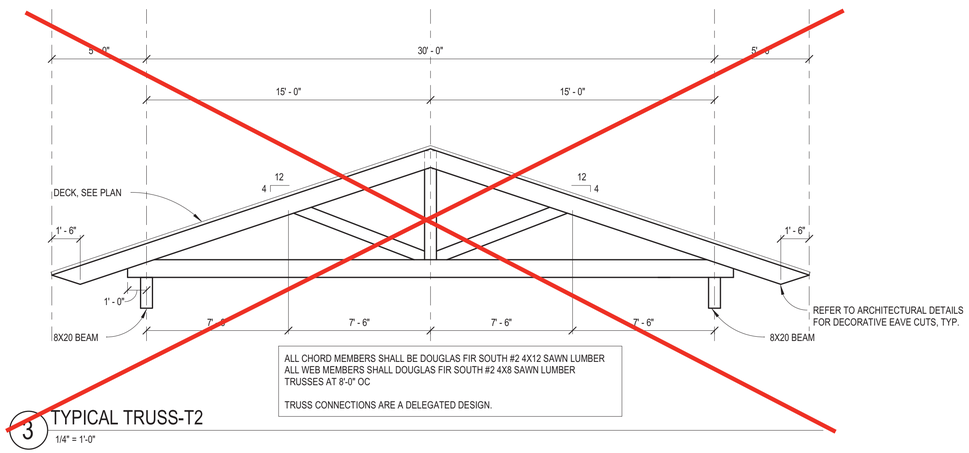

ALL CHORD MEMBERS SHALL BE DOUGLAS FIR SOUTH #2 4X12 SAWN LUMBER
ALL WEB MEMBERS SHALL DOUGLAS FIR SOUTH #2 4X8 SAWN LUMBER
TRUSSES AT 8'-0" OC

TRUSS CONNECTIONS ARE A DELEGATED DESIGN.

3 TYPICAL TRUSS-T2
1/4" = 1'-0"

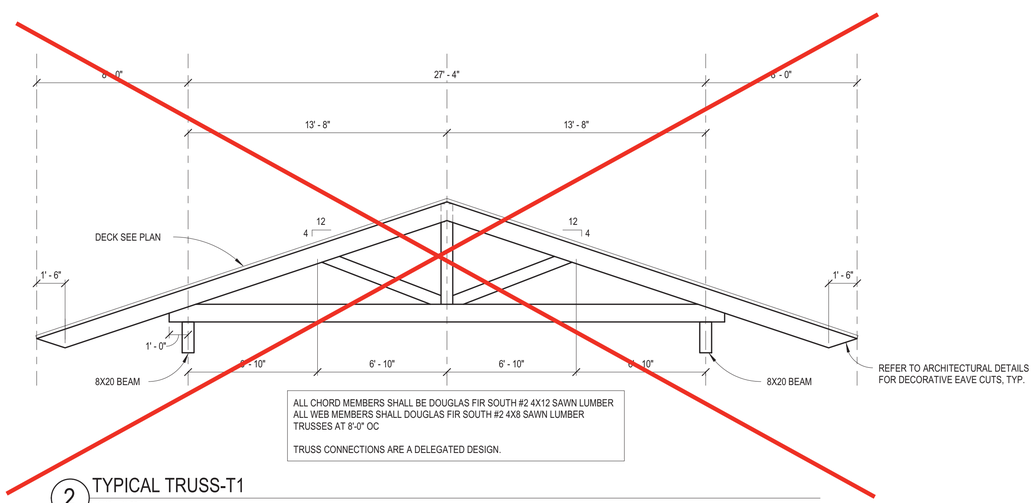

ALL CHORD MEMBERS SHALL BE DOUGLAS FIR SOUTH #2 4X12 SAWN LUMBER
ALL WEB MEMBERS SHALL DOUGLAS FIR SOUTH #2 4X8 SAWN LUMBER
TRUSSES AT 8'-0" OC

TRUSS CONNECTIONS ARE A DELEGATED DESIGN.

2 TYPICAL TRUSS-T1
1/4" = 1'-0"

ROOF SHEATHING NOTES

1. STAGGER JOINTS AS SHOWN
2. MIN SIZE OF SHEET SHALL BE 24"x24"
3. NAIL EA CORNER OF PANEL & MID-POINT OF FULL SIZE SHEETS PRIOR TO NAILING
4. NAILS SHALL BE DRIVEN TIGHT BUT SHALL NOT FRACTURE SURFACE OF SHEATHING
5. TOLERANCE ON FASTENING SHALL BE +/- 1" WITH THE AVERAGE NAIL SPACING OVER ANY 48" LENGTH BEING AT LEAST THAT NOTED ON THE PLAN
6. SEE DETAIL FOR BLOCK DETAILS AT RIDGES
7. SEE WOOD ROOF SHEATHING NOTES ON THE GENERAL NOTES SHEET AND THE PLAN NOTES

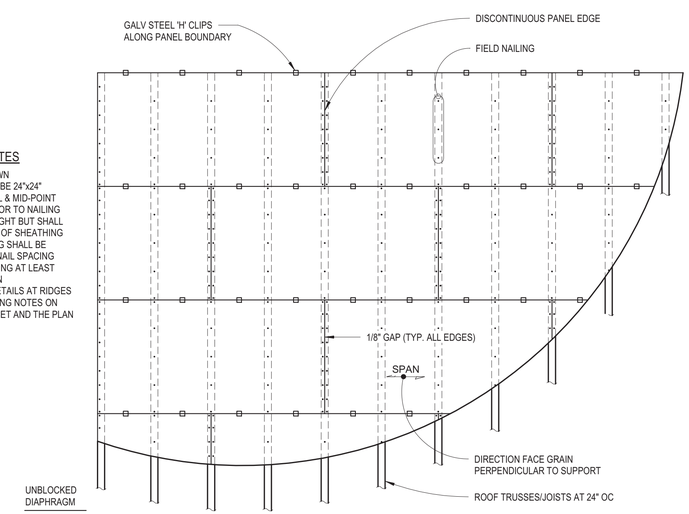

1 ROOF SHEATHING ON FRAMING
3/4" = 1'-0"

360 Engineering Group, PLLC
www.360engrgroup.com
1201 East 3rd Street
Tulsa, OK 74120
918.518.1124
Certificate of Authorization: OK #5996 | EXP 6.30.2020

Landscape Architects
howell & vancuren
601 S. Lewis Ave, Tulsa, OK 74104
918.592.1270 | howellvancuren.com

Architects
INTEGRATED ARCHITECTURE
P.O. Box 7806, Edmond, OK 73083
405.509.7800 | integratedarc.com

Civil Engineers
wallace
410 N. Walnut Ave. Ste 200, Oklahoma City, OK 73104
405.236.5858 | wallacesc.com

Electrical Engineers
HP ENGINEERING
205 NW 63rd Street, Oklahoma City, OK 73116
405.286.9945 | hpengineeringinc.com

Graphic Design
Hoffer Waska creative
1443 S. Norfolk Ave, Tulsa, OK 74120
281.704.9729 |

City of Norman

RUBY GRANT PARK

3110 WEST FRANKLIN ROAD
NORMAN, OKLAHOMA 73072

REVISIONS:

PROFESSIONAL SEAL:

LICENSED PROFESSIONAL ENGINEER
ELIAS R. JOHANNSSON
21349
OKLAHOMA
06.14.19

ISSUE DATE:
June 14, 2019

CONSTRUCTION DOCUMENTS

DRAWN BY: JR CHECKED BY: RM

SHEET NAME:
FRAMING DETAILS

SHEET NUMBER:
S502 A

DRAWING IS NOT TO SCALE UNLESS PRINTED ON SHEET SIZE: 22"x34" (ANSI D)

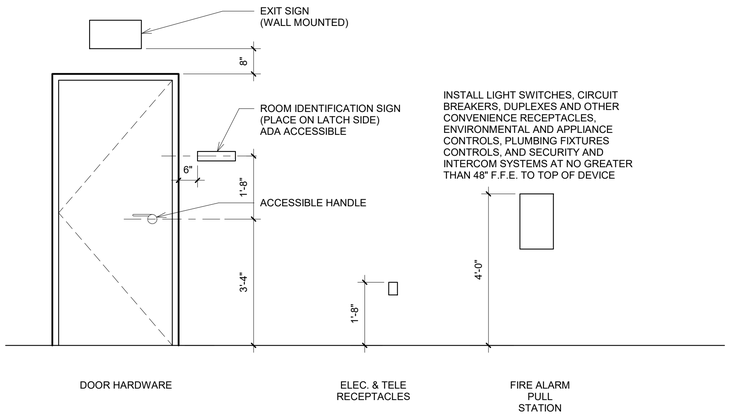

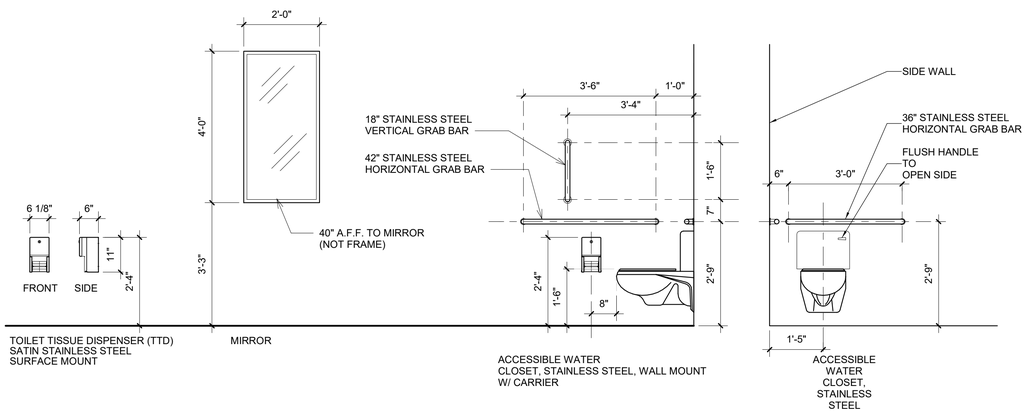

2 MOUNTING HEIGHTS
1/2" = 1'-0"

A. APPLICABLE BUILDING CODES:

2015 International Building Code including State and Local Amendment
ICC A117.1-2009: Accessible and Usable Buildings and Facilities
2006 International Energy Conservation Code
2015 International Plumbing Code including State and Local Amendments
2015 International Mechanical Code including State and Local Amendments
2015 International Fuel Gas Code including State and Local Amendments
2014 National Electrical Code (NFPA 70) including State and Local Amendments
2015 International Fire Code including State and Local Amendments
2015 Edition of NFPA-1 Fire Prevention Code including Local Amendments (For occupancy of buildings already having a certificate of occupancy)
2015 International Property Maintenance Code including Local Amendments

B. OCCUPANCY CLASSIFICATION: (CHAPTER 3)

1. ASSEMBLY A-3 (SECTION 303 AND 303.4). BATHROOM FACILITIES SHALL BE CONSIDERED ACCESSORY USE.

C. CONSTRUCTION TYPE: (CHAPTER 5)

1. TYPE OF CONSTRUCTION: TYPE V NOT SPRINKLERED.

3. CURRENT BUILDING AREAS:

MEMORIAL BUILDING	2,000 SQ. FT.
PAVILLION BUILDING	2,655 SQ. FT.
BATHROOM BUILDING	740 SQ. FT.

4. ALLOWABLE AREAS, PER BUILDING (TABLE 506.2): 6,000 SQ. FT. (NS)

D. TYPES OF CONSTRUCTION: (CHAPTER 6): TYPE VB, ZERO HOUR RATING

E. ACCESSIBILITY (CHAPTER 11)
1. ACCESSIBLE ROUTE (SECTION 1104)
a. AT LEAST ONE ACCESSIBLE ROUTE SHALL CONNECT ACCESSIBLE BUILDINGS, ACCESSIBLE ELEMENTS, AND ACCESSIBLE SPACES THAT ARE ON THE SAME SITE
2. ACCESSIBLE ENTRANCES (SECTION 1105)
a. AT LEAST 50 PERCENT OF ALL PUBLIC ENTRANCES SHALL BE ACCESSIBLE.
3. ACCESSIBLE PARKING AND PASSENGER LOADING FACILITIES (TABLE 1106.1)
4. IF 26-50 PARKING SPACES ARE DESIGNED, THEN A MINIMUM OF 2 ACCESSIBLE SPACES SHALL BE PROVIDED.
5. PASSENGER LOADING ZONES SHALL BE DESIGNED AND CONSTRUCTED IN ACCORDANCE WITH ICC A117.1.
6. TOILET ROOMS (1109.2)
a. AT LEAST ONE OF EACH TYPE OF FIXTURE, ELEMENT, CONTROL OF DISPENSER IN EACH TOILET ROOM SHALL BE ACCESSIBLE. NOTE EXCEPTION 1.

I. FIXTURE COUNTS ARE BASED ON A-3 ASSEMBLY.

1. GROUP A-3 OCCUPANCY

A. WATER CLOSETS MEN:	1 PER 125. 3 TOILETS PROVIDED, THUS 375 OCCUPANTS ALLOWED
B. WATER CLOSETS WOMEN:	1 PER 65. 3 TOILETS PROVIDED, THUS 195 OCCUPANTS ALLOWED
C. LAVATORIES (MEN):	1 PER 200.
D. LAVATORIES (WOMEN):	1 PER 200.
C. DRINKING FOUNTAINS:	1 PER 500.
D. OTHER - SERVICE SINKS:	1 REQUIRED.

3 CODE REVIEW
1" = 1'-0"

Landscape Architect
howell & vancuren
601 S. Lewis Ave, Tulsa, OK 74104
918.582.1270 | howellvancuren.com

Architect
INTEGRATED ARCHITECTURE
P.O. Box 7806, Edmond, OK, 73083
405.509.7800 | integratedarc.com

Civil Engineer
wallace
410 N. Walnut Ave, Ste 200, Oklahoma City, OK, 73104
405.236.5858 | wallacesc.com

Electrical Engineer
HP ENGINEERING
205 NW 63rd Street, Oklahoma City, OK, 73116
405.286.9945 | hpengineeringinc.com

Graphic Design
Hoffer Waska creative
1443 S. Norfolk Ave, Tulsa, OK 74120
281.704.9729 |

City of Norman
RUBY GRANT PARK
AMENDMENT ONE
3110 WEST FRANKLIN ROAD
NORMAN, OKLAHOMA 73072

REVISIONS

PROFESSIONAL SEAL
STATE OF OKLAHOMA
MARK D. GANDY
3254
LICENSED ARCHITECT
12-11-20

ISSUE DATE:
December 11, 2020

CONSTRUCTION DOCUMENTS

DRAWN BY: CT CHECKED BY: MG

SHEET NAME
GENERAL INFORMATION

SHEET NUMBER
G001A

DRAWING IS NOT TO SCALE UNLESS PRINTED ON SHEET SIZE 22"x34" (ANSI D)

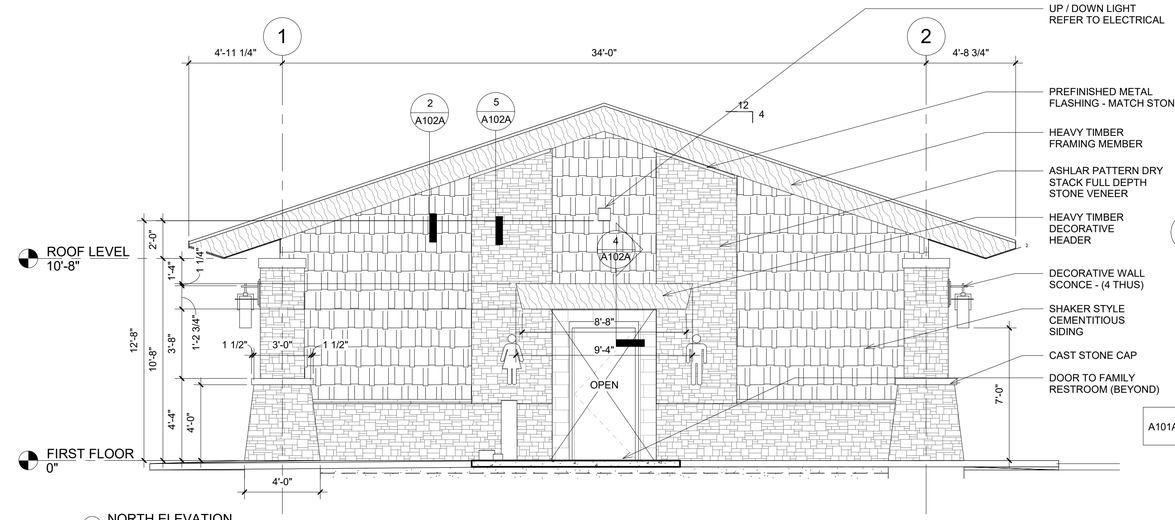

2 NORTH ELEVATION
1/4" = 1'-0"

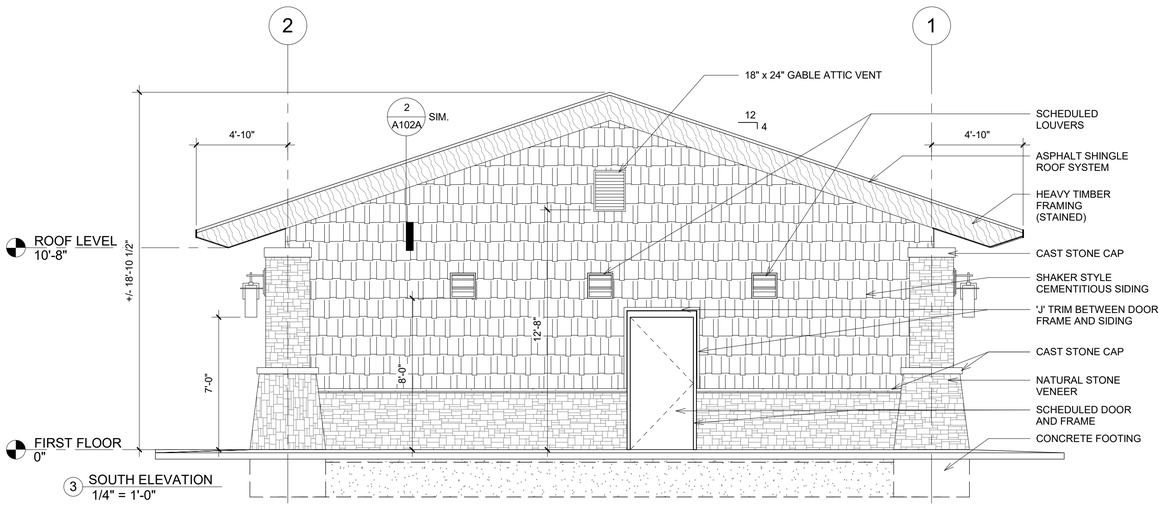

3 SOUTH ELEVATION
1/4" = 1'-0"

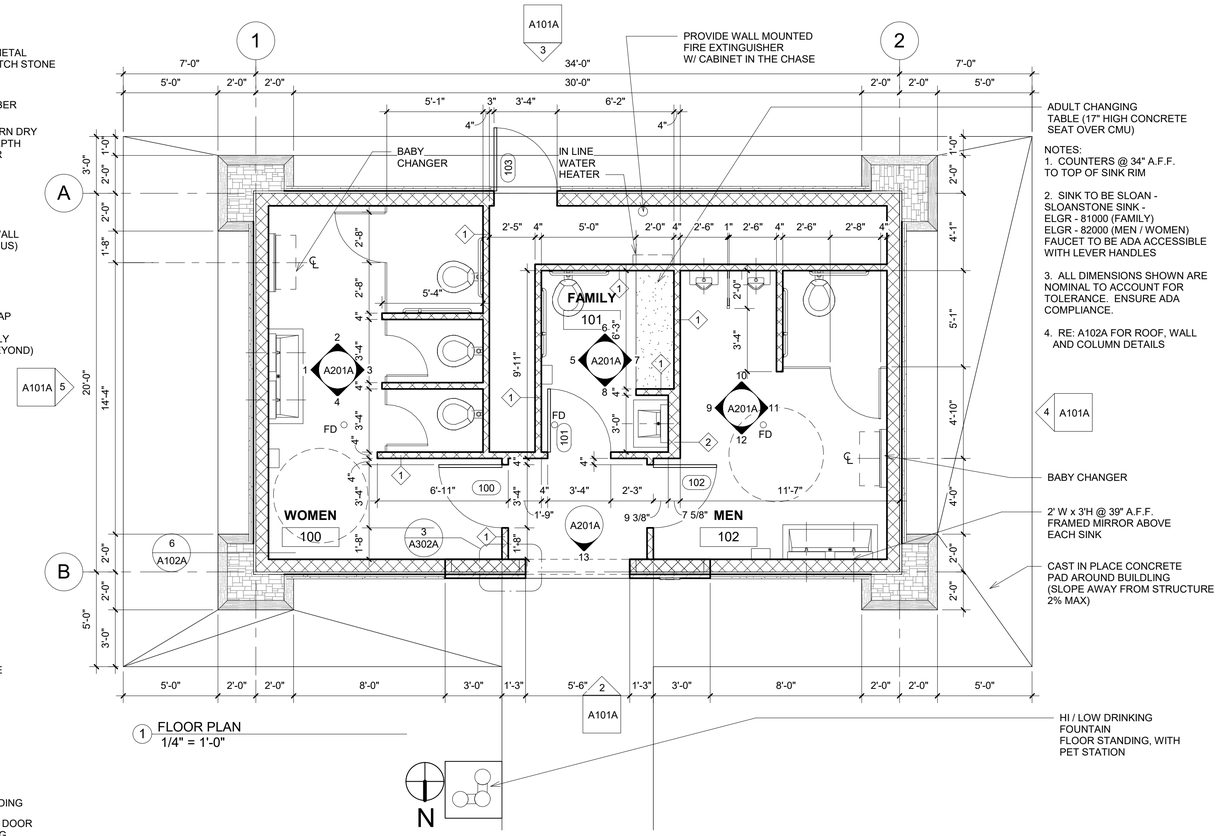

1 FLOOR PLAN
1/4" = 1'-0"

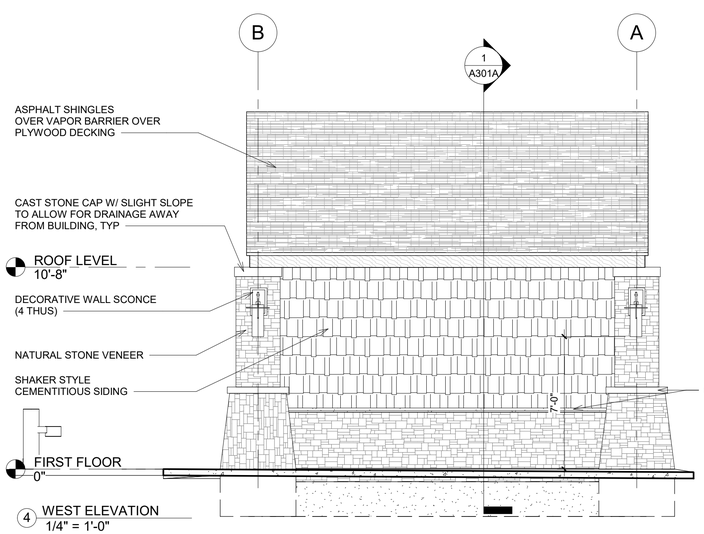

4 WEST ELEVATION
1/4" = 1'-0"

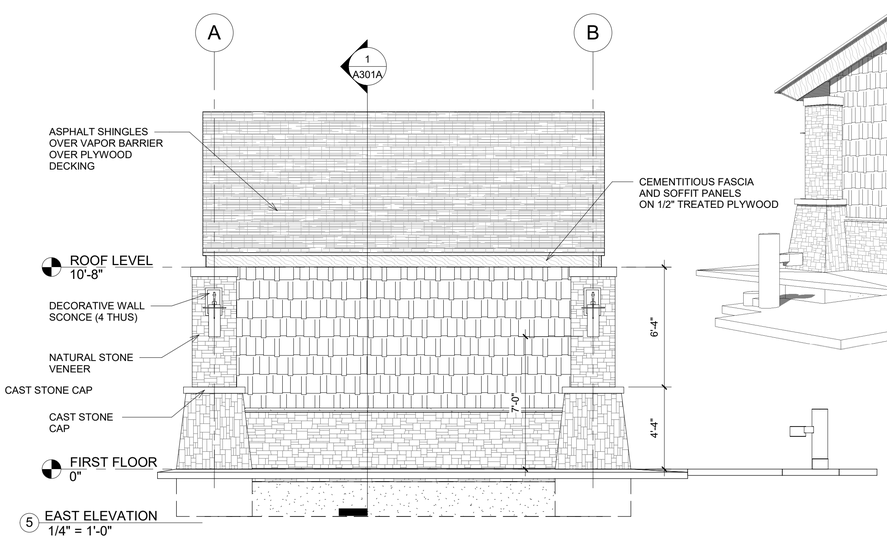

5 EAST ELEVATION
1/4" = 1'-0"

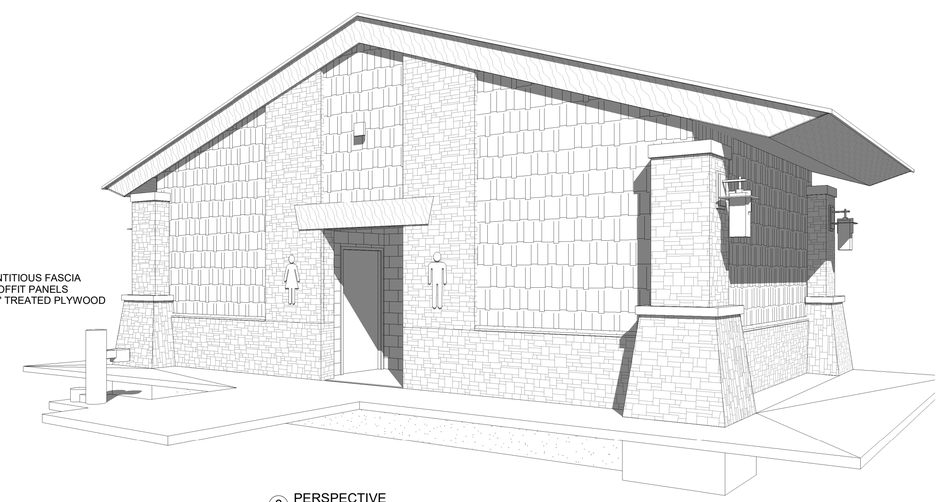

6 PERSPECTIVE

Landscape Architect

howell & vancuren

601 S. Lewis Ave, Tulsa, OK 74104
918.582.1270 | howellvancuren.com

Architect

INTEGRATED ARCHITECTURE

P.O. Box 7806, Edmond, OK, 73083
405.509.7800 | integratedarc.com

Civil Engineer

wallace

410 N. Walnut Ave, Ste 200, Oklahoma City, OK, 73104
405.236.5858 | wallacesc.com

Electrical Engineer

HP ENGINEERING

205 NW 63rd Street, Oklahoma City, OK, 73116
405.286.9945 | hpengineeringinc.com

Graphic Design

Hoffer Waska creative

1443 S. Norfolk Ave, Tulsa, OK 74120
281.704.9729 |

City of Norman

RUBY GRANT PARK

AMENDMENT ONE

3110 WEST FRANKLIN ROAD
NORMAN, OKLAHOMA 73072

REVISIONS

PROFESSIONAL SEAL

STATE OF OKLAHOMA
MARK D. GANDY
3254
LICENSED PROFESSIONAL ENGINEER
12-11-20

ISSUE DATE:
December 11, 2020

CONSTRUCTION DOCUMENTS

DRAWN BY: CT CHECKED BY: MG

SHEET NAME
FLOOR PLANS AND
EXT. ELEVATIONS

SHEET NUMBER
A101A

DRAWING IS NOT TO SCALE UNLESS PRINTED ON
SHEET SIZE 22"x34" (ANSI D)

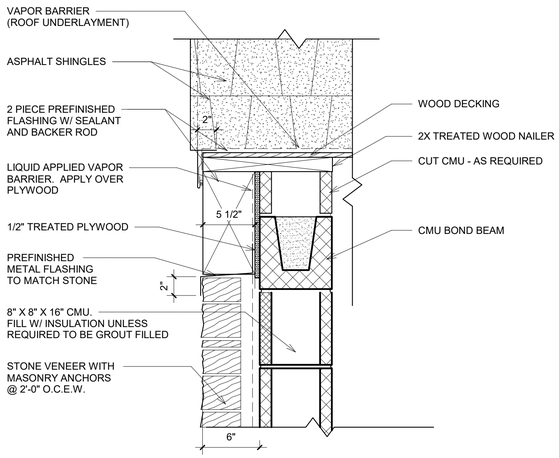

5 HEAVY TIMBER @ STONE DETAIL
1 1/2" = 1'-0"

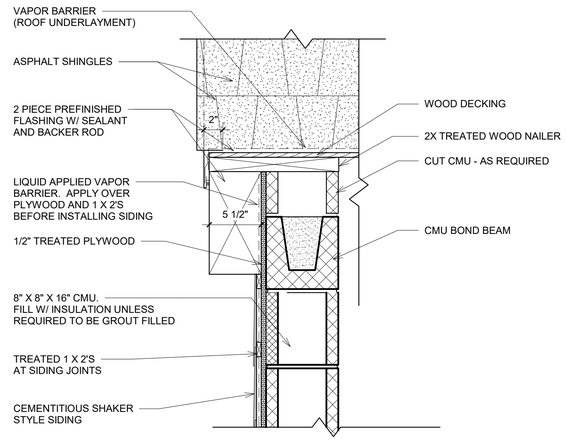

2 HEAVY TIMBER @ SIDING DETAIL
1 1/2" = 1'-0"

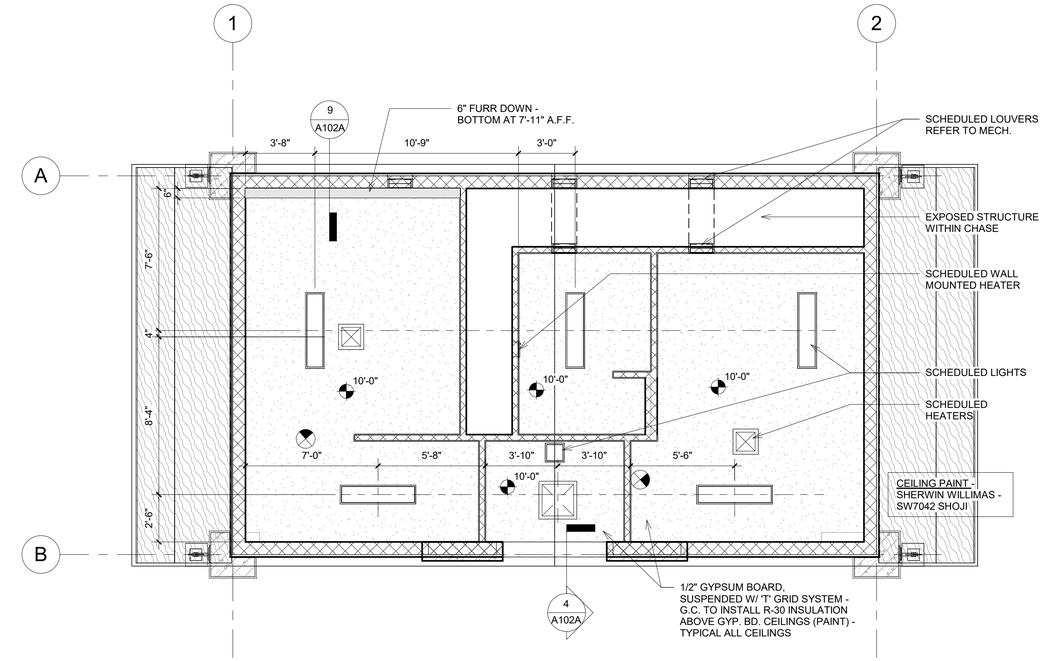

1 CEILING PLAN
1/4" = 1'-0"

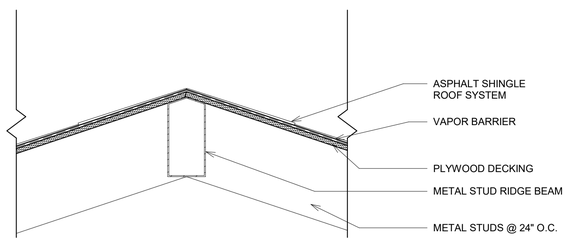

7 ROOF DETAILS PLYWOOD DECK
1 1/2" = 1'-0"

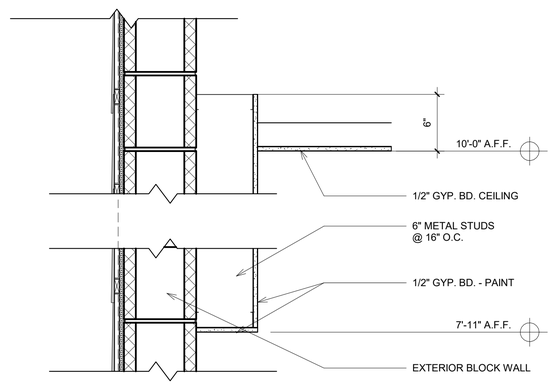

9 FURR DOWN DETAIL
1 1/2" = 1'-0"

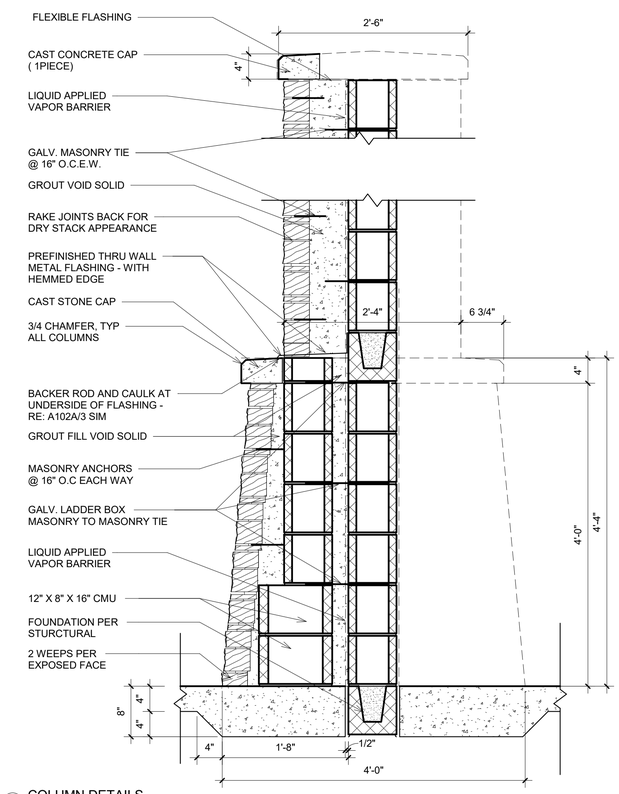

6 COLUMN DETAILS
1" = 1'-0"

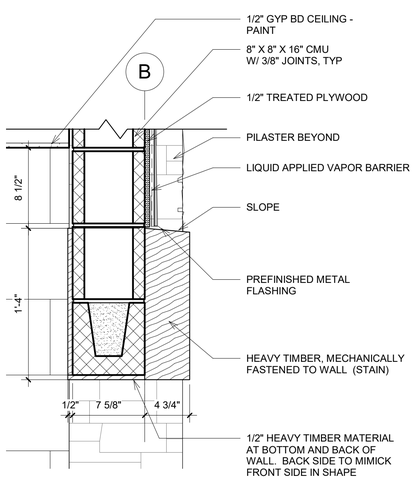

4 SECTION AT HEADER BEAM
1 1/2" = 1'-0"

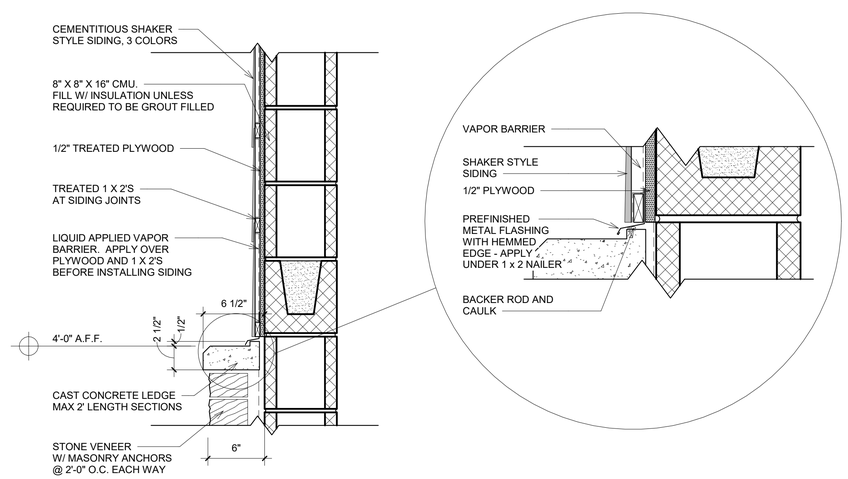

3 SIDING DETAILS
1 1/2" = 1'-0"

Landscape Architect

howell & vancuren

601 S. Lewis Ave, Tulsa, OK 74104
918.582.1270 | howellvancuren.com

Architect

INTEGRATED ARCHITECTURE

P.O. Box 7806, Edmond, OK, 73083
405.509.7800 | integratedarc.com

Civil Engineer

wallace

410 N. Walnut Ave, Ste 200, Oklahoma City, OK, 73104
405.236.5858 | wallacesc.com

Electrical Engineer

HP ENGINEERING

205 NW 63rd Street, Oklahoma City, OK, 73116
405.286.9945 | hpengineeringinc.com

Graphic Design

Hoffer Waska creative

1443 S. Norfolk Ave, Tulsa, OK 74120
281.704.9729 |

City of Norman

RUBY GRANT PARK

AMENDMENT ONE

3110 WEST FRANKLIN ROAD
NORMAN, OKLAHOMA 73072

REVISIONS

PROFESSIONAL SEAL

STATE OF OKLAHOMA
MARK D. GANDY
3254
LICENSED
PROFESSIONAL ENGINEER
12-11-20

ISSUE DATE:
December 11, 2020

CONSTRUCTION DOCUMENTS

DRAWN BY: CT CHECKED BY: MG

SHEET NAME
REFLECTED CEILING
PLAN & WALL DTLS

SHEET NUMBER
A102A

DRAWING IS NOT TO SCALE UNLESS PRINTED ON
SHEET SIZE 22"X34" (ANSI D)

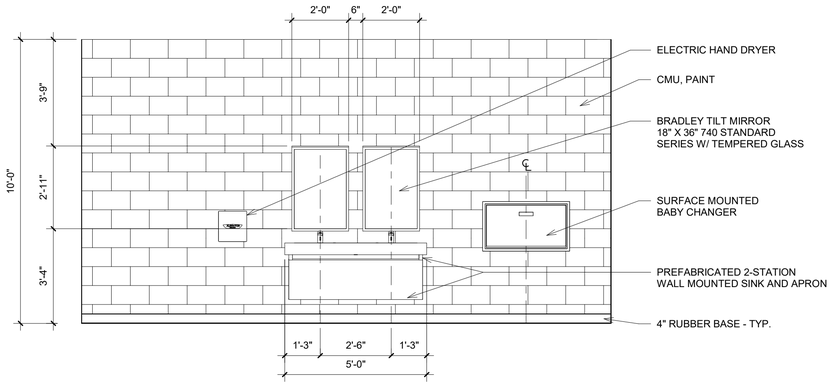

1 INTELV01
3/8" = 1'-0"

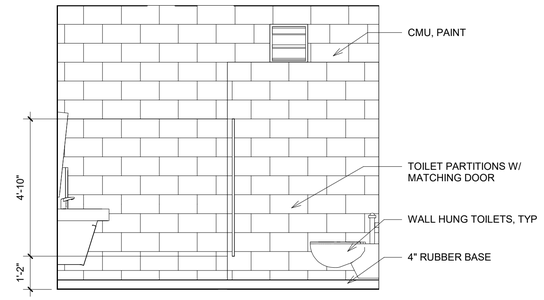

2 INTELV02
3/8" = 1'-0"

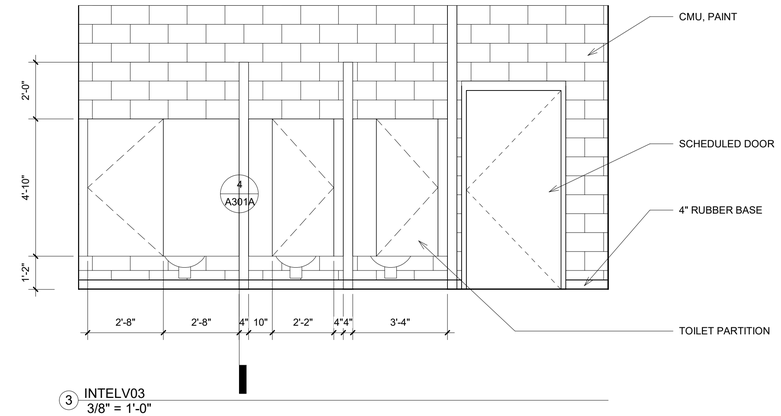

3 INTELV03
3/8" = 1'-0"

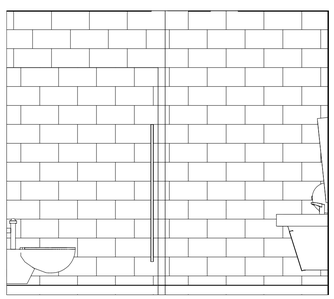

4 INTELV04
3/8" = 1'-0"

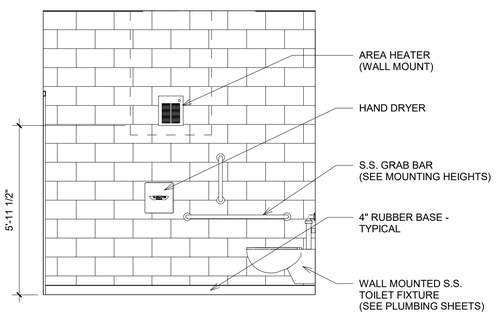

5 INTELV05
3/8" = 1'-0"

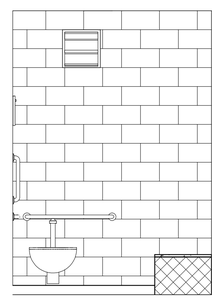

6 INTELV06
3/8" = 1'-0"

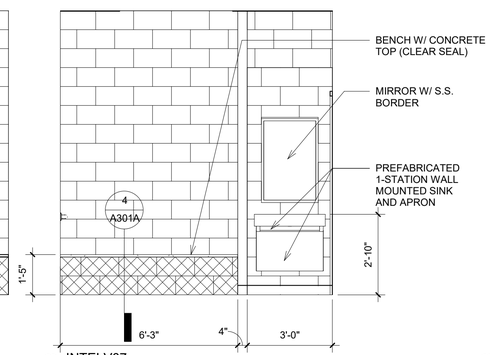

7 INTELV07
3/8" = 1'-0"

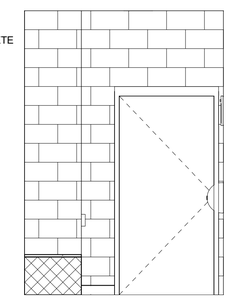

8 INTELV08
3/8" = 1'-0"

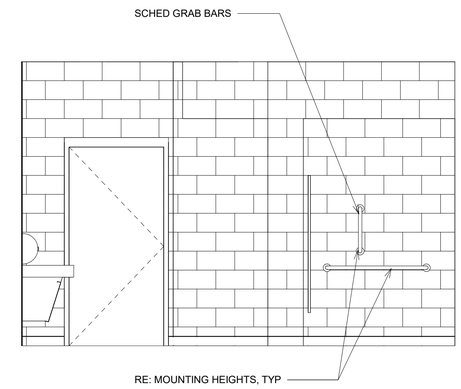

9 INTELV09
3/8" = 1'-0"

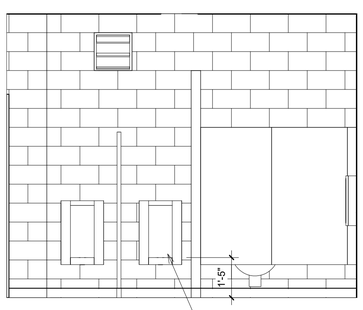

10 INTELV10
3/8" = 1'-0"

SCHED FIXTURES,
MOUNT ONE URINAL
AT ACCESSIBLE HEIGHT

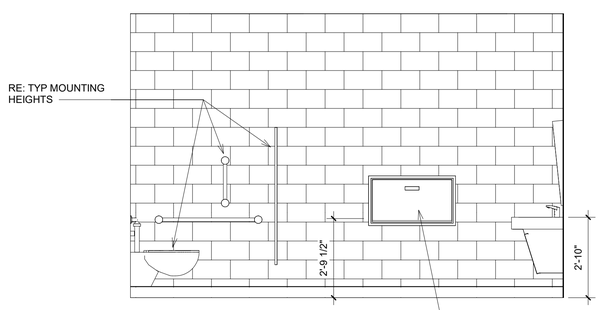

11 INTELV11
3/8" = 1'-0"

SURFACED MOUNTED
BABY CHANGER

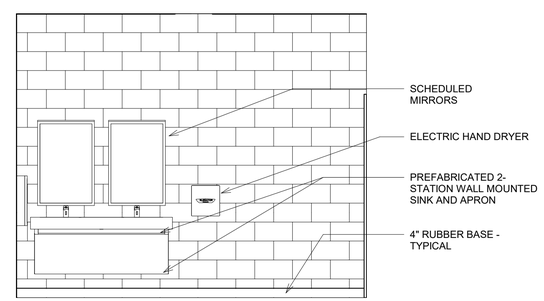

12 INTELV12
3/8" = 1'-0"

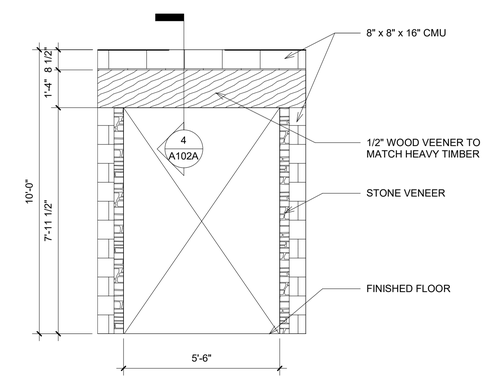

13 INTELV13
3/8" = 1'-0"

INTERIOR FINISH COLORS:

DOORS AND FRAMES
SHERWIN WILLIAMS - WARM STONE SW7032

INTERIOR WALLS
SHERWIN WILLIAMS - ANEW GRAY SW7030

BATHROOM CEILING
SHERWIN WILLIAMS - SHOJI WHITE SW7042

Landscape Architect
howell & vancuren
601 S. Lewis Ave, Tulsa, OK 74104
918.582.1270 | howellvancuren.com

Architect
INTEGRATED ARCHITECTURE
P.O. Box 7806, Edmond, OK, 73083
405.509.7800 | integratedarc.com

Civil Engineer
wallace
410 N. Walnut Ave, Ste 200, Oklahoma City, OK, 73104
405.236.5858 | wallacesc.com

Electrical Engineer
HP ENGINEERING
205 NW 63rd Street, Oklahoma City, OK, 73116
405.286.9945 | hpengineeringinc.com

Graphic Design
Hoffer Waska creative
1443 S. Norfolk Ave, Tulsa, OK 74120
281.704.9729 |

City of Norman
RUBY GRANT PARK
AMENDMENT ONE
3110 WEST FRANKLIN ROAD
NORMAN, OKLAHOMA 73072

REVISIONS

PROFESSIONAL SEAL
STATE OF OKLAHOMA
MARK D. GANDY
3254
LICENSED PROFESSIONAL ENGINEER
12-11-20

ISSUE DATE:
December 11, 2020

CONSTRUCTION DOCUMENTS

DRAWN BY: CT CHECKED BY: MG

SHEET NAME
INTERIOR ELEVATIONS

SHEET NUMBER
A201A

DRAWING IS NOT TO SCALE UNLESS PRINTED ON
SHEET SIZE 22"x34" (ANSI D)

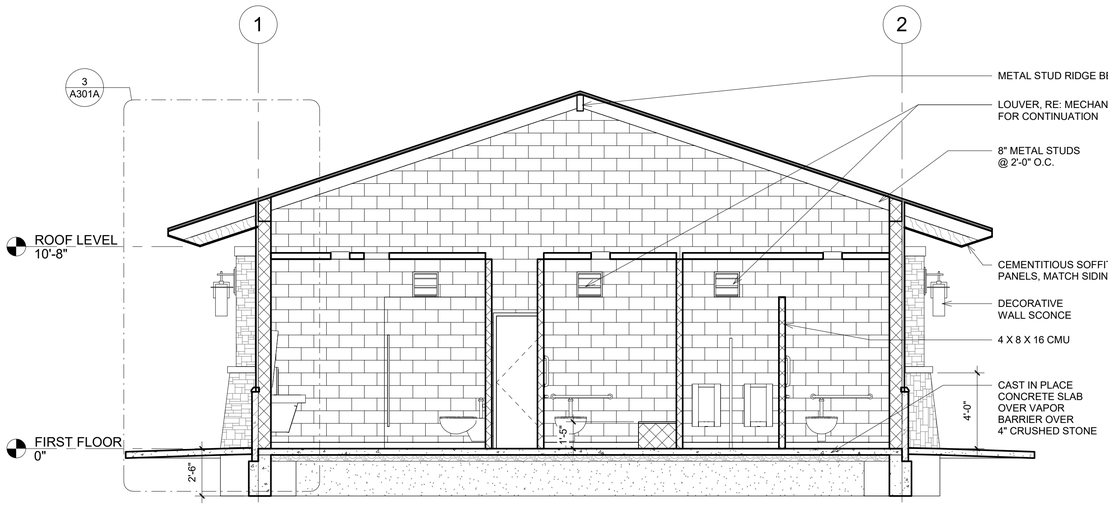

1 BLDGSEC01
1/4" = 1'-0"

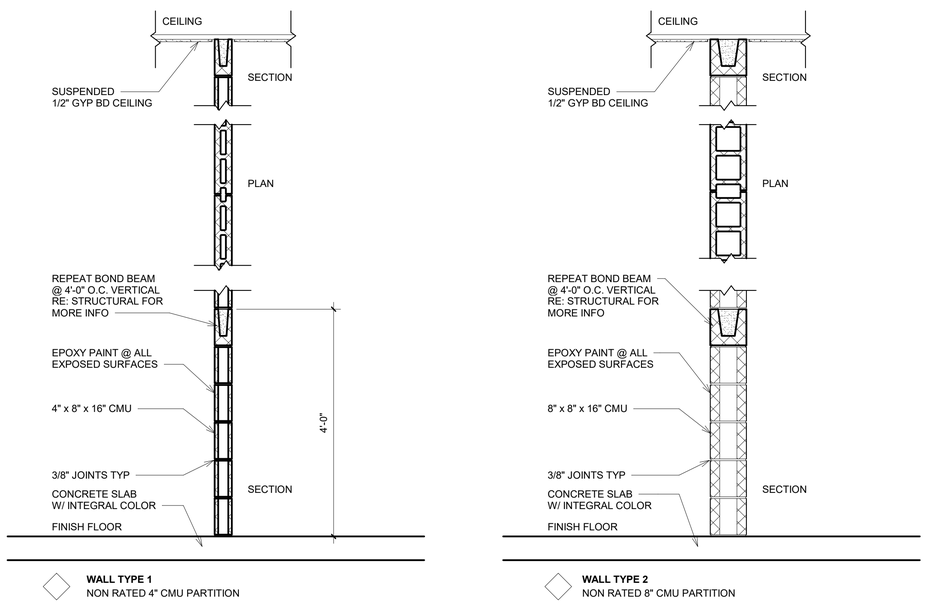

2 WALL TYPES
3/4" = 1'-0"

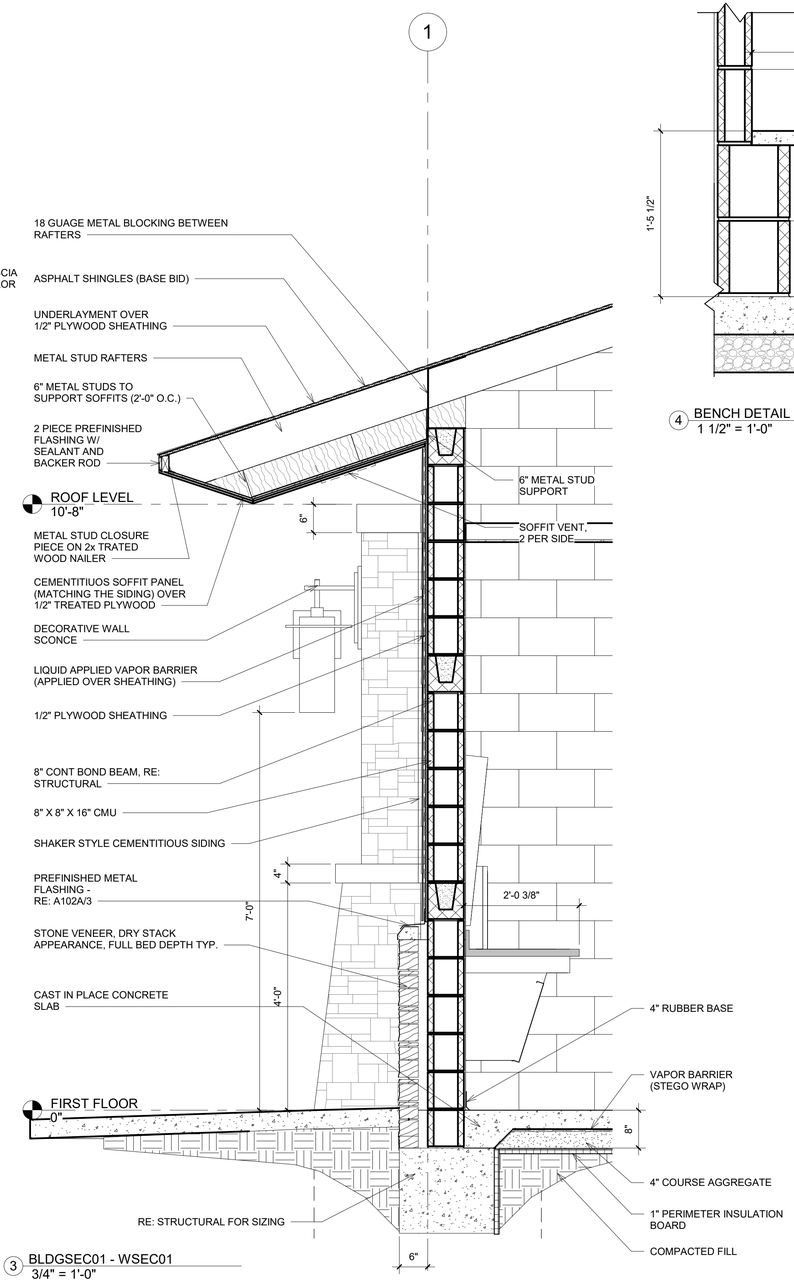

3 BLDGSEC01 - WSEC01
3/4" = 1'-0"

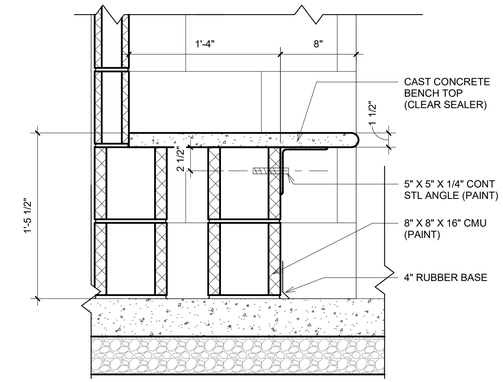

4 BENCH DETAIL
1 1/2" = 1'-0"

NOTES ON ACCESSORIES

1. BABY CHANGING STATION EQUAL TO BRADLEY 962-11 SURFACE MOUNTED, STAINLESS STEEL
2. TOILET PARTITIONS EQUAL TO BRADLEY SOLID PLASTIC (HDPE) FLOOR MOUNTED OVERHEAD BRACED
3. GRAB BARS EQUAL TO BRADLEY 812 SERIES, STAINLESS STEEL, CONCEALED MOUNTING, SIZES AS INDICATED
4. MIRRORS EQUAL TO BRADLEY MIRRORS WITH TEMPERED GLAZING AND STAINLESS STEEL FRAME, 740 SERIES
5. SURFACE MOUNTED NAPKIN DISPOSAL: BY PARKS DEPARTMENT
6. SOAP DISPENSER: BY PARKS DEPARTMENT
7. TOWEL DISPENSER: BY PARKS DEPARTMENT
8. TOILET TISSUE DISPENSER: BY PARKS DEPARTMENT
9. IN ADDITION TO TOWEL DISPENSERS, PROVIDE HANDS FREE OPERATION Excel Dryer XLERATOReco XL-SB-ECO Hand Dryer, No Heat, Brushed Stainless Steel Cover, Automatic Sensor, Surface Mounted, 500 Watts

NOTES ON EXTERIOR FINISHES AND RELATED EXTERIOR ITEMS

1. SIDING. WOODTONE BUILDING PRODUCTS. RUSTIC SHAKES COLLECTION. CEMENTITOUS, W/ 15 YEAR WARRANTY SUMMER WHEAT
2. NATURAL STONE: MINICK MATERIALS, RE: SPECIFICATIONS
3. EXTERIOR WALL SCONCES. HINKLEY & FR , MANHATTAN 2235PZ-LED. SUSPENDED LIGHTS: CUSTOM, CAMMAN LIGHTING
4. SIGNAGE. HOWELL AND VANCUREN
5. DRINKING FOUNTAIN: ELKAY LK4420DB TERRACOTTA W/ PET STATION
6. WOOD STAIN: SHERWIN WILLIAMS, SEMI TRANSPARENT FINISH, HARBOR MIST
7. ASPHALT SHINGLES - OWENS CORNING, TRU DEFINITION, DURATION STORM, COLOR: TEAK
8. FLOORING: SEALED CONCRETE, PERMASEAL, CLEAR

NOTES ON ROOM FINISHES

1. WALLS. PAINT W/ EPOXY PAINT
2. CEILINGS. PAINT W/ EPOXY PAINT
3. FLOORING. SEALED CONCRETE
4. VANITIES - SLOANSTONE, ELGR 81000 (FAMILY RESTROOM) MATRIX SAND, ELGR 82000 (MEN'S / WOMEN'S) MATRIX SAND
5. BASE TRIM. NONE

Landscape Architect
howell & vancuren
601 S. Lewis Ave, Tulsa, OK 74104
918.582.1270 | howellvancuren.com

Architect
INTEGRATED ARCHITECTURE
P.O. Box 7806, Edmond, OK, 73083
405.509.7800 | integratedarc.com

Civil Engineer
wallace
410 N. Walnut Ave, Ste 200, Oklahoma City, OK, 73104
405.236.5858 | wallacesc.com

Electrical Engineer
HP ENGINEERING
205 NW 63rd Street, Oklahoma City, OK, 73116
405.286.9945 | hpengineeringinc.com

Graphic Design
Hoffer Waska creative
1443 S. Norfolk Ave, Tulsa, OK 74120
281.704.9729 |

City of Norman
RUBY GRANT PARK
AMENDMENT ONE
3110 WEST FRANKLIN ROAD
NORMAN, OKLAHOMA 73072

REVISIONS

PROFESSIONAL SEAL

STATE OF OKLAHOMA
MARK D. GANDY
3254
LICENSED
12-11-20

ISSUE DATE:
December 11, 2020

CONSTRUCTION DOCUMENTS

DRAWN BY: CT CHECKED BY: MG

SHEET NAME
SECTIONS AND DETAILS

SHEET NUMBER
A301A

DRAWING IS NOT TO SCALE UNLESS PRINTED ON SHEET SIZE 22"X34" (ANSI D)

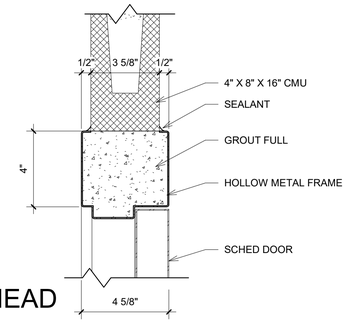

A. HEAD

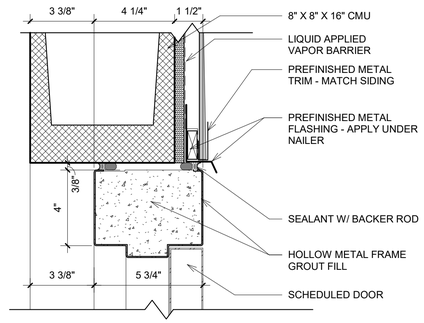

A. HEAD

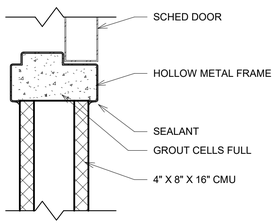

B. JAMB

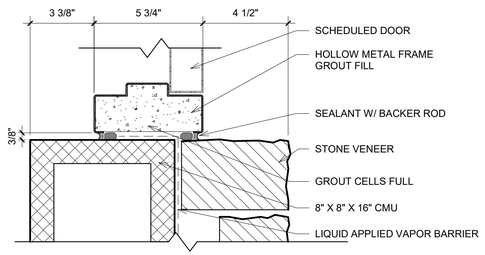

AT STONE

B. JAMB

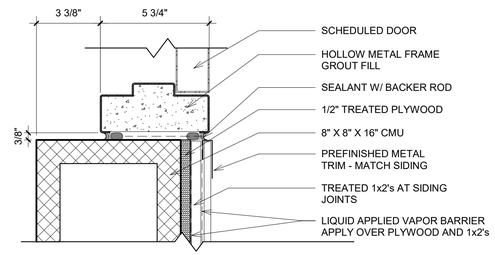

AT SIDING

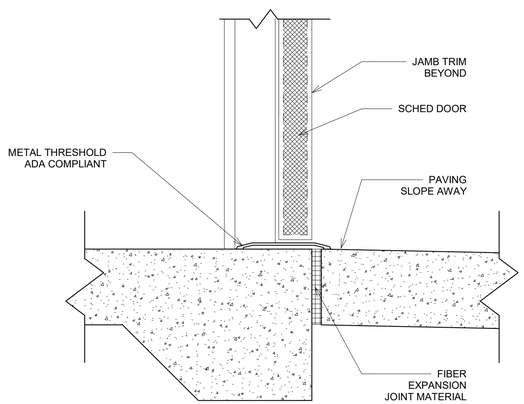

C. THRESHOLD

1 DRDTL01
3" = 1'-0"

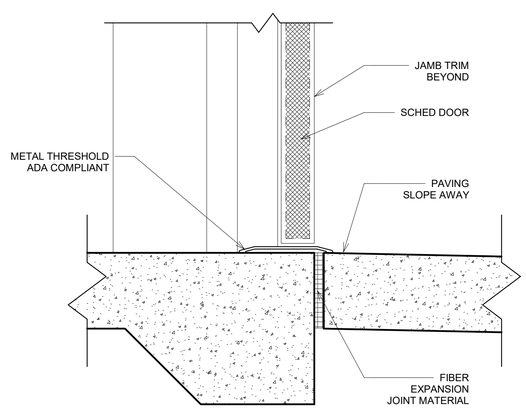

C. THRESHOLD

2 DRDTL02
3" = 1'-0"

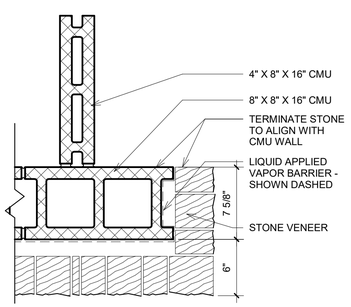

3 ENTRY JAMB
1 1/2" = 1'-0"

DOOR SCHEDULE

Door #	Door Width	Door Height	Door Thickness	Door Material	Door Finish	Fire Rating	Hardware	Frame Type	Frame Material	Frame Finish	Frame Head	Frame Jamb	Threshold	Comments
100	3'-4"	7'-0"	1 3/4"	HM	PAINT	0	1	A	HM	PAINT	A302A/1A	A302A/1B	A302A/1C	LOCKS ON TIMERS
101	3'-4"	7'-0"	1 3/4"	HM	PAINT	0	1	A	HM	PAINT	A302A/1A	A302A/1B	A302A/1C	LOCKS ON TIMERS
102	3'-4"	7'-0"	1 3/4"	HM	PAINT	0	1	A	HM	PAINT	A302A/1A	A302A/1B	A302A/1C	LOCKS ON TIMERS
103	3'-4"	7'-0"	1 3/4"	HM	PAINT	0	1	A	HM	PAINT	A302A/2A	A302A/2B	A302A/2C	

HARDWARE SET(S):

SET 1

QTY	TYPE	DESCRIPTION	FINISH	MFG
1 EA.	CONTINUOUS HINGE	780-224HDXRBCC	CLR	HAGER
1 EA.	RIM EXIT DEVICE	4501 RIM ALL	630	HAGER
1 EA.	MORTISE CYLINDER	3902	626	HAGER
1 EA.	DOOR CLOSER	5100 HDCS	689	HAGER
1 EA.	KICK PLATE	194S	630	HAGER
1 EA.	THRESHOLD	520SN	MIL	HAGER
1 EA.	DOOR BOTTOM SWEEP	750SN	CLR	HAGER
1 SET	WEATHERSTRIPPING	881SN	MIL	HAGER
1 EA.	RAIN DRIP	810S	MIL	HAGER

NOTE: INSTALL WEATHERSTRIPPING BEFORE DOOR CLOSER

DOOR 101 SHALL INCLUDE DEAD BOLT LOCK WITH OCCUPANCY INDICATOR. FALCON #D271x626 INDICATOR DEAD LOCK - SATIN BRASS WITH EMERGENCY ACCESS KEY

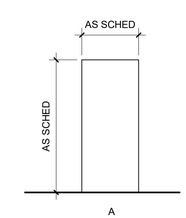

INSULATED HOLLOW METAL DOOR (PAINT)

DOOR ELEVATIONS

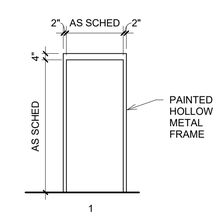

FRAME ELEVATIONS

Landscape Architect
howell & vancuren
601 S. Lewis Ave, Tulsa, OK 74104
918.582.1270 | howellvancuren.com

Architect
INTEGRATED ARCHITECTURE
P.O. Box 7806, Edmond, OK, 73083
405.509.7800 | integratedarc.com

Civil Engineer
wallace
410 N. Walnut Ave, Ste 200, Oklahoma City, OK, 73104
405.236.5858 | wallacesc.com

Electrical Engineer
HP ENGINEERING
205 NW 63rd Street, Oklahoma City, OK, 73116
405.286.9945 | hpengineeringinc.com

Graphic Design
Hoffer Waska creative
1443 S. Norfolk Ave, Tulsa, OK 74120
281.704.9729 |

City of Norman

RUBY GRANT PARK

AMENDMENT ONE

3110 WEST FRANKLIN ROAD
NORMAN, OKLAHOMA 73072

REVISIONS

PROFESSIONAL SEAL

STATE OF OKLAHOMA
MARK D. GANDY
3254
LICENSED PROFESSIONAL ENGINEER
12-11-20

ISSUE DATE:
December 11, 2020

CONSTRUCTION DOCUMENTS

DRAWN BY: CT CHECKED BY: MG

SHEET NAME
HEAD AND JAMB DETAILS

SHEET NUMBER
A302A

DRAWING IS NOT TO SCALE UNLESS PRINTED ON SHEET SIZE 22"x34" (ANSI D)

PIPING MATERIALS SCHEDULE

DESCRIPTION	MATERIAL
ABOVE GROUND DOMESTIC WATER	TYPE L HARD COPPER WITH WROUGHT COPPER FITTINGS AND 95-S LEAD FREE SOLDER. SIL-FOS JOINTS ABOVE SLAB ARE NOT ALLOWED. PEX PIPE AND FITTINGS ACCEPTABLE IN CONCEALED AREAS.
UNDER GROUND WATER INSIDE AND OUTSIDE	1" AND SMALLER: ASTM B88 TYPE L SOFT COPPER NO JOINTS OR FITTINGS UNDER SLAB. MAKE CONNECTIONS ABOVE SLAB WITH WROUGHT COPPER FITTINGS AND LEAD FREE SOLDER. 1-1/4" AND LARGER: ASTM B88 TYPE L HARD COPPER, WROUGHT COPPER FITTINGS. MAKE JOINTS WITH SIL-FOS (15% AG). PEX PIPE ALLOWED BELOW SLAB W/ OUT FITTINGS.
UNDERGROUND SANITARY SEWER AND VENT PIPING INSIDE BUILDING AND OUTSIDE BUILDING	PVC SCHEDULE 40 PIPE AND FITTINGS.
ABOVE GROUND SANITARY SEWER AND VENT	PVC SCHEDULE 40 PIPE AND FITTINGS. IN PLENUM RETURN AREAS WRAP PVC WITH 1" FIRE WRAP.

INSULATION SCHEDULE

DESCRIPTION	INSULATION TYPE	THICKNESS
DOMESTIC COLD WATER PIPING, CONDENSATE PIPING	MINERAL FIBER WITH ALL-SERVICE JACKET	1" AND SMALLER: 1/2" 1-1/4" AND LARGER: 1"
DOMESTIC HOT WATER PIPING, DOMESTIC HOT WATER RECIRCULATION PIPING	MINERAL FIBER WITH ALL-SERVICE JACKET	1-1/4" AND SMALLER: 1/2" 1-1/2" AND LARGER: 1"
FLOOR DRAINS, TRAPS, AND SANITARY DRAIN PIPING WITHIN 10' OF DRAIN RECEIVING CONDENSATE AND EQUIPMENT DRAIN WATER BELOW 60 DEG F.	MINERAL FIBER WITH ALL-SERVICE JACKET	1/2"
WATER COOLER TRAPS, HANDICAPPED LAVATORY AND SINK TRAPS, TAILPIECES, HOT AND COLD WATER SUPPLY LINES	ANTI-MICROBIAL VINYL EQUAL TO TRUEBRO BRAND LAV-GUARD	1/8"

PLUMBING GENERAL NOTES

1. THE ENTIRE PLUMBING SYSTEM SHALL BE IN ACCORDANCE WITH THE CURRENT INTERNATIONAL PLUMBING CODE, AND ALL OTHER GOVERNING STATE AND LOCAL CODES, STATUTES, REGULATIONS, AND REQUIREMENTS OFAUTHORITY HAVING JURISDICTION.
2. THE PIPING INDICATED ON THESE PLANS IS DIAGRAMMATICAL. ALL WORK SHALL BE COORDINATED WITH ALL OTHER TRADES PRIOR TO INSTALLATION. CONTRACTOR SHALL COORDINATE ROUTING OF ALL PIPING WITH EXISTING CONDITIONS AND SHALL PROVIDE ANY NECESSARY OFFSETS, REROUTING, TEES, ELBOWS, ETC. REQUIRED FOR A COMPLETE AND COORDINATED INSTALLATION.
3. THE CONTRACTOR SHALL OBTAIN AND PAY ALL FEES RELATED TO PERMITTING, INSPECTION, TAP-ON FEES, ETC.
4. THE CONTRACTOR SHALL COORDINATE ANY PLUMBING OR PIPING SYSTEM SHUTDOWN WITH THE OWNER A MINIMUM 48 HOURS IN ADVANCE.
5. ALL DOMESTIC WATER, VENT, AND NATURAL GAS PIPING SHOWN IS ABOVE CEILING, EXPOSED OVERHEAD, OR WITHIN WALLS UNLESS NOTED OTHERWISE.
6. ALL SANITARY SEWER AND OTHER WASTE PIPING SHOWN IS BELOW SLAB, BELOW FLOOR, OR WITHIN WALLS UNLESS NOTED OTHERWISE.
7. INSTALL WATER HAMMER ARRESTORS ON WATER LINES CONNECTED TO SOLENOID VALVES OR FLUSH VALVES. SIZE, LOCATE, AND INSTALL IN ACCORDANCE WITH PDI STANDARD WH201. PROVIDE ACCESS PANELS UNLESS OTHERWISE NOTED.
8. INSTALL ISOLATION VALVES IN PIPING CONNECTION TO EACH INDIVIDUAL FIXTURE, PIECE OF EQUIPMENT, AND FIXTURE GROUPS.
9. REFER TO PLUMBING DETAILS FOR INSTALLATION, MOUNTING, SUPPORT, AND PIPING CONNECTION INFORMATION NOT INDICATED ON FLOORPLANS.
10. INSTALL FROST PROOF HOSE BIBB SUPPLY PIPING ON THE INSIDE OF BUILDING INSULATION BARRIER. SEAL SHEATHING PENETRATION AIR AND WATER TIGHT.
11. MOUNT FLUSH CONTROLS FOR HANDICAPPED WATER CLOSETS ON THE OPEN SIDE OF THE TOILET AREAS.
12. ALL PIPING PENETRATIONS THROUGH WALLS OR FLOORS SHALL BE SEALED EQUAL TO THE RATING OF THE WALL OR FLOOR.
13. CLEAN AND DISINFECT THE DOMESTIC WATER SYSTEM IN ACCORDANCE WITH SPECIFICATIONS AND LOCAL CODE AND HEALTH DEPARTMENT REQUIREMENTS.
14. TEST ALL PIPING SYSTEMS IN ACCORDANCE WITH SPECIFICATIONS AND AS REQUIRED BY LOCAL CODE AND AUTHORITY HAVING JURISDICTION.
15. MAINTAIN 10 FEET MINIMUM SEPARATION BETWEEN DOMESTIC WATER AND SANITARY SEWER LINES LOCATED OUTSIDE OF BUILDING FOOTING.
16. BACKFLOW PREVENTION DEVICES SHALL BE INSTALLED IN ACCORDANCE WITH LOCAL CODE AND REQUIREMENTS OF AUTHORITY HAVING JURISDICTION.
17. ALL VENTS THRU ROOF (VTR) PENETRATIONS INDICATED ARE DIAGRAMMATIC. COORDINATE EXACT LOCATIONS WITH ALL TRADES. MAINTAIN 10- FEET CLEARANCE BETWEEN VTR'S AND ALL FRESH AIR INTAKES AND BUILDING OPENINGS.
18. ANY PVC PIPE PENETRATIONS OF FIRE RATED ASSEMBLIES SHOULD BE EXTERNALLY SLEEVED WITH STEEL, FERROUS, OR COPPER MATERIALS, SECURELY FASTENED TO THE FIRE RATED ASSEMBLY, AND ANY SPACE BETWEEN THE SLEEVE AND THE ASSEMBLY PENETRATED SHALL BE PROTECTED USING MATERIAL THAT CONFORMS TO ASTM E 814 OR UL 1479, SUCH AS FIRE STOP FS-1900 OR FLAME STOPPER 5000.
19. PROVIDE ASSE 1070 THERMOSTATIC MIXING VALVES AS REQUIRED AT HANDWASHING AND BATHING FACILITIES AS REQUIRED BY LOCAL CODES.
20. PROVIDE PRESSURE REDUCING VALVE AT INCOMING WATER SERVICE AS REQUIRED BY LOCAL CODES WHEN INCOMING PRESSURE EXCEEDS 80 PSI.

PLUMBING LEGEND

LINETYPE/SYMBOL	DESCRIPTION	LINETYPE/SYMBOL	DESCRIPTION
SS	SANITARY SEWER	FD-1	FLOOR DRAIN
AW AW	ACID WASTE	SWD-1	SAFE WASTE DRAIN
G G	GREASE LINE		FLOOR SINK
	HOT WATER SUPPLY		ROOF DRAIN
	HOT WATER RETURN		ROOF OVERFLOW DRAIN
	COLD WATER SUPPLY	WCO-1/ SCO-1	WALL CLEAN OUT/ STACK CLEAN OUT
IRR IRR	IRRIGATION	COTG-1/ TWCO-1	CLEAN OUT TO GRADE/ TWO-WAY CLEAN OUT
GAS GAS	LOW PRESSURE GAS		FROST PROOF HOSE BIBB (FPHB-1)
MPG MPG	MEDIUM PRESSURE GAS (MPG)		HOSE BIBB (HB-1)
W W	DOMESTIC WATER		LINE CAP
F F	FIRE LINE		PRESSURE REDUCING VALVE
RD RD	BELOW SLAB ROOF DRAIN		UNION
OD OD	BELOW SLAB ROOF OVERFLOW DRAIN		VALVE
RD RD	ROOF DRAIN	HOR. OR VERT.	BACKFLOW PREVENTER (RPZ-1)
OD OD	ROOF OVERFLOW DRAIN	UB-1/ SB-1	UTILITY BOX/ SUPPLY BOX
	VENT LINE	M	WATER/GAS METER
SSD	SUBSURFACE DRAIN LINE	R	REGULATOR
			CIRCULATION PUMP
	NEW CONNECTION POINT		LIMITS OF DEMOLITION
WHA-A	WATER HAMMER ARRESTOR W/ ACCESS PANEL. LETTER INDICATES PDI SIZE.		

PLUMBING EQUIPMENT SCHEDULE

FIXTURE TAG	DESCRIPTION	MANUFACTURER	TRIM	ELECTRICAL REQUIREMENTS
DF-1	DRINKING FOUNTAIN, OUTDOOR PEDESTAL MOUNT, BI-LEVEL WITH PET STATION, NON-FILTERED, AND NON-REFRIGERATED, FREEZE RESISTANT	ELKAY LK4420DBFRK	ELKAY OUTDOOR DRINKING FOUNTAIN PEDESTAL MOUNT, BI-LEVEL WITH PET STATION NON-FILTERED NON-REFRIGERATED. FEATURES SHALL INCLUDE 316 STAINLESS, HEAVY DUTY VANDAL-RESISTANT. FURNISHED WITH VANDAL-RESISTANT BUBBLER. MECHANICAL FRONT BUBBLER BUTTON ACTIVATION. PRODUCT SHALL BE WALL MOUNT (ON-WALL), FOR OUTDOOR APPLICATIONS, SERVING 2 STATION(S), UNIT SHALL BE LEAD-FREE DESIGN WHICH IS CERTIFIED TO NSF/ANSI 61 & 372 (LEAD FREE) AND MEETS FEDERAL AND STATE LOW-LEAD REQUIREMENTS.	N/A
IWH-1	INSTANTANEOUS WATER HEATER, 10.25" X10.75" X4.5"	EEMAX EX023240TC ML	MICROPROCESSING TEMPERATURE CONTROL, ABS-UL 90V RATED COVER, REPLACEABLE FILTER, IRON FREE NICKEL CHROME ELEMENT, INSTALL PER MANUFACTURERS REQUIREMENTS, PROVIDE DRAIN PAN	23 KW, 240 V, 1 PHASE, 96(2x48) FLA
FD-1	FLOOR DRAIN	J.R. SMITH 2005	DUCO CAST IRON BODY, FLASHING COLLAR, SECURED SQUARE ADJUSTABLE STRAINER HEAD WITH HOLE GRATE, LOOSE GRATE AND SEDIMENT BUCKETS, PROSET TRAP GUARD, REFER TO PLANS FOR SIZES	
HL-1	HANDICAPPED LAVATORY, UNDERMOUNT, STAINLESS STEEL, HARDWIRED SENSOR FAUCET 0.5 GPM	ELKAY ASANA ELUH12	ZURN Z6950-XL-S-CWB-MJ-F-LL-HW6 PROXIMITY SENSOR FAUCET, McGUIRE 155WC OFFSET CHROME PLATED CAST BRASS GRID DRAIN, SEAMLESS BRASS TAILPIECE W/ CAST BRASS LOCKNUT, McGUIRE 8902 1 1/2" x 1 1/2" CHROME PLATED HEAVY CAST BRASS ADJUSTABLE P TRAP W/ CLEANOUT PLUG, McGUIRE 170LK CHROME PLATED SOLID BRASS ANGLE STOPS W/ 5" CHROME PLATED COPPER EXTENSION TUBE & LOOSE KEY, FLEXIBLE CHROME PLATED COPPER RISERS, PROVIDE INSULATION EQUAL TO TRUEBRO LAV-GUARD PVC TYPE INSULATION AROUND "P" TRAP & IPS CONNECTIONS	115V, 1PH PROVIDE MULTI-AC POWERED TRANSFORMER REFER ELEC DWGS
HUR-1	URINAL, WALL MOUNT, STAINLESS STEEL, ADA ACCESSIBLE	ACORN PENAL-WARE 1709HEU-W-1-FVBO	INTEGRAL ELONGATED FLUSHING RIM, INTEGRAL TRAP, 2" FEMALE FLANGED OUTLET CONNECTION, J.R. SMITH 0615 URINAL SUPPORT, FLUSH VALVE ZURN ZEMS6195AV-EWS-HW6 HARDWIRED W/MANUAL OVERRIDE	115V, 1PH PROVIDE MULTI-AC POWERED TRANSFORMER REFER ELEC DWGS
HWC-1	HANDICAPPED WATER CLOSET, STAINLESS STEEL, CONCEALED FLUSH VALVE, HARDWIRED AUTOMATIC SENSOR, WALL MOUNTED, ELONGATED RIM, 12" ROUGH-IN, SIPHON JET BOWL	ZURN Z5682	AMERICAN STANDARD OPEN FRONT SEAT 5901.100, ZURN ZEMS6195AV-WS1-HW6 CONCEALED SENSOR WATER CLOSET FLUSHOMETER	115V, 1PH PROVIDE MULTI-AC POWERED TRANSFORMER REFER ELEC DWGS
UR-1	URINAL, WALL MOUNT, STAINLESS STEEL	ACORN PENAL-WARE 1709HEU-W-1-FVBO	INTEGRAL ELONGATED FLUSHING RIM, INTEGRAL TRAP, 2" FEMALE FLANGED OUTLET CONNECTION, J.R. SMITH 0615 URINAL SUPPORT, FLUSH VALVE ZURN ZEMS6195AV-EWS-HW6 HARDWIRED W/MANUAL OVERRIDE	115V, 1PH PROVIDE MULTI-AC POWERED TRANSFORMER REFER ELEC DWGS
WC-1	WATER CLOSET, STAINLESS STEEL, CONCEALED FLUSH VALVE, HARDWIRED AUTOMATIC SENSOR, WALL MOUNTED, ELONGATED RIM	ZURN Z5682	AMERICAN STANDARD OPEN FRONT SEAT 5901.100, ZURN ZEMS6195AV-WS1-HW6 CONCEALED SENSOR WATER CLOSET FLUSHOMETER	115V, 1PH PROVIDE MULTI-AC POWERED TRANSFORMER REFER ELEC DWGS
WCO-1	WALL CLEAN OUT	J. R. SMITH 4512S	DUCO CAST IRON CLEANOUT TEE, BRONZE PLUG, REMOVABLE STAINLESS STEEL COVER. REFER TO PLANS FOR SIZE, PROVIDE ROUND OR SQUARE FRAME AND COVER AS REQUIRED, REFER TO ARCHITECT	

ROUGH-IN AND MOUNTING HEIGHT SCHEDULE

FIXTURE	WASTE	VENT	COLD WATER	HOT WATER	HEIGHT OF INSTALLATION
WATER CLOSET FLUSH VALVE FLOOR MOUNTED	4"	2"	1"		
URINAL FLUSH VALVE WALL MOUNTED	1-1/2"	1-1/4"	3/4"		NON-ADA 24" TO TOP OF FLOOD LEVEL ADA 17" TO TOP OF FLOOD LEVEL
DRINKING FOUNTAIN	1-1/2"	1-1/2"	1/2"		NON-ADA 40" TO TOP OF ORIFICE ADA 36" TO TOP OF ORIFICE
LAVATORIES AND SINKS, WALL MOUNTED	1-1/2"	1-1/4"	1/2"	1/2"	NON-ADA 31" TO TOP OF RIM ADA 34" TO TOP OF RIM
LAVATORIES AND SINKS, COUNTER MOUNTED	1-1/2"	1-1/4"	1/2"	1/2"	
SUPPLY BOX			1/2"		12" TO BOTTOM OF BOX
FLOOR DRAINS/SINKS	2"	1-1/2"			

NOTES:
1. ALL VENT LINE SIZES SHOWN ARE MINIMUM UNLESS SHOWN LARGER ON RISER DIAGRAMS.
2. SIZES SHOWN FOR WASTE ARE FOR RISERS ONLY.
3. ALL DRAIN AND VENT LINES BELOW SLAB SHALL BE 2" OR LARGER.
4. VENT LINES SHALL RISE 6" ABOVE HORIZONTAL DRAIN PIPING BEFORE OFFSETTING HORIZONTALLY.

Landscape Architect
howell & vancuren
601 S. Lewis Ave, Tulsa, OK 74104
918.592.1270 | howellvancuren.com

Architect
INTEGRATED ARCHITECTURE
P.O. Box 7806, Edmond, OK 73083
405.509.7800 | integratedarc.com

Civil Engineer
wallace
410 N. Walnut Ave. Ste 200, Oklahoma City, OK 73104
405.236.5858 | wallacesc.com

Electrical Engineer
HP ENGINEERING
205 NW 63rd Street, Oklahoma City, OK 73116
405.286.9945 | hpengineeringinc.com

Graphic Design
Hoffer Waska creative
1443 S. Norfolk Ave, Tulsa, OK 74120
281.704.9729 |

City of Norman
RUBY GRANT PARK
AMENDMENT ONE
3110 WEST FRANKLIN ROAD
NORMAN, OKLAHOMA 73072

REVISIONS:

PROFESSIONAL SEAL:
LICENSED PROFESSIONAL ENGINEER Shawn Hoffman 24553 OKLAHOMA
CA5338(PE)

ISSUE DATE:
December 11, 2020

CONSTRUCTION DOCUMENTS

DRAWN BY: CHECKED BY:

SHEET NAME:
PLUMBING LEGEND, SCHEDULES, & NOTES

SHEET NUMBER:
P 0.01A

DRAWING IS NOT TO SCALE UNLESS PRINTED ON SHEET SIZE: 22"X34" (ANSI D)

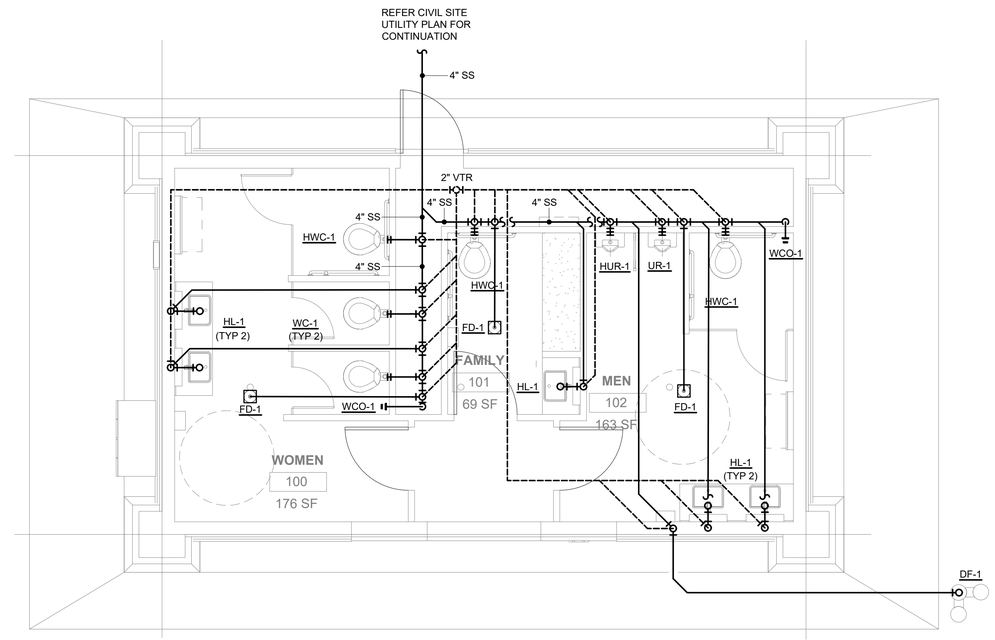

01 TYPICAL RESTROOM WASTE/VENT PLAN

SCALE: 1/4"=1'-0"

GENERAL WASTE/VENT NOTES

A. SIZES TO INDIVIDUAL PLUMBING FIXTURES TO BE EQUAL TO ROUGH-IN SIZE NOTED IN THE PLUMBING FIXTURE SCHEDULE.

B. COORDINATE ROUTING OF UNDERFLOOR PIPING WITH LOCATIONS OF FOUNDATIONS AND FOOTINGS. COORDINATE WITH STRUCTURAL FOR ANY PENETRATIONS THRU FOUNDATIONS OR FOOTINGS AND PROVIDE SLEEVES AND/OR ADDITIONAL PROTECTION OF PIPING AS REQUIRED.

0' 4' 8' 16'

Landscape Architect
howell & vancuren
601 S. Lewis Ave, Tulsa, OK 74104
918.592.1270 | howellvancuren.com

Architect
INTEGRATED ARCHITECTURE
P.O. Box 7806, Edmond, OK 73083
405.509.7800 | integratedarc.com

Civil Engineer
wallace
410 N. Walnut Ave. Ste 200, Oklahoma City, OK 73104
405.236.5858 | wallacesc.com

Electrical Engineer
HP ENGINEERING
205 NW 63rd Street, Oklahoma City, OK 73116
405.286.9945 | hpengineeringinc.com

Graphic Design
Hoffer Waska creative
1443 S. Norfolk Ave, Tulsa, OK 74120
281.704.9729 |

City of Norman

RUBY GRANT PARK

AMENDMENT ONE
3110 WEST FRANKLIN ROAD
NORMAN, OKLAHOMA 73072

REVISIONS:

PROFESSIONAL SEAL:

LICENSED PROFESSIONAL ENGINEER Shawn Hoffman 24553 OKLAHOMA
CA5338(PE)

ISSUE DATE:
December 11, 2020

CONSTRUCTION DOCUMENTS

DRAWN BY: CHECKED BY:

SHEET NAME:
ENLARGED BLDG WASTE/VENT PLAN

SHEET NUMBER:
P 1.01A

DRAWING IS NOT TO SCALE UNLESS PRINTED ON SHEET SIZE: 22"X34" (ANSI D)

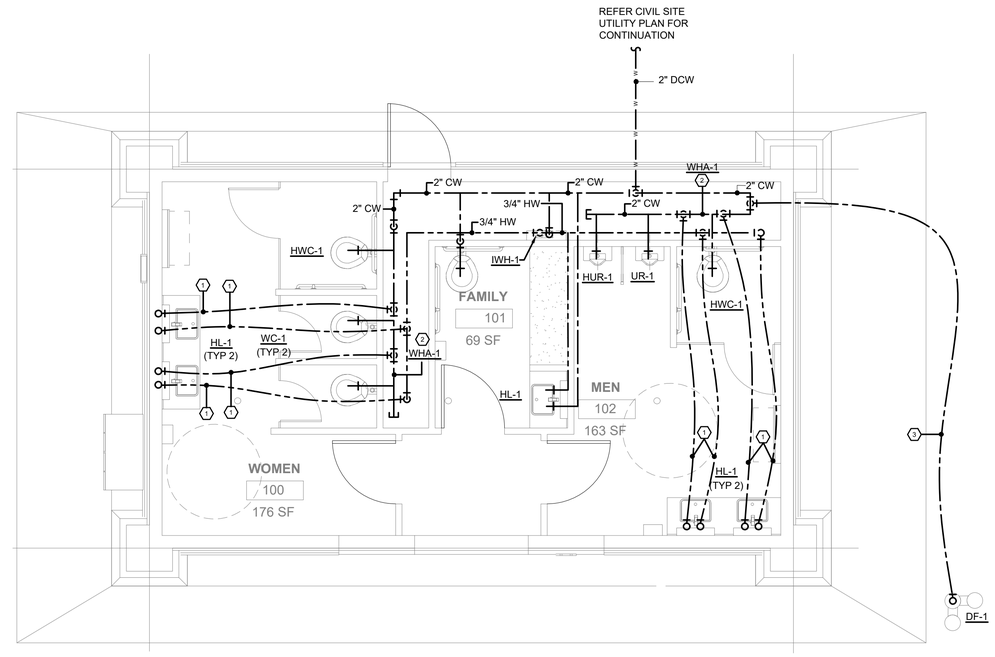

01 TYPICAL RESTROOM PLUMBING PLAN

SCALE: 1/4"=1'-0"

GENERAL PLUMBING NOTES

A. SIZES TO INDIVIDUAL PLUMBING FIXTURES SHALL BE EQUAL TO ROUGH-IN SIZE NOTED IN THE PLUMBING FIXTURE SCHEDULE.

B. COORDINATE PLUMBING REQUIREMENTS WITH OWNER FURNISHED EQUIPMENT. PROVIDE CONNECTIONS AND ACCESSORIES AS REQUIRED.

PLUMBING KEY NOTES (X)

1. 1/2" CW/HW(110°) UP FROM BELOW FLOOR TO LAVATORY.
2. PROVIDE PDI SIZED WATER HAMMER ARRESTOR AS INDICATED WITH ACCESS PANEL.
3. 1/2" CW BLW SLAB TO DRINKING FOUNTAIN.

0' 4' 8' 16'

Landscape Architect
howell & vancuren
601 S. Lewis Ave, Tulsa, OK 74104
918.592.1270 | howellvancuren.com

Architect
INTEGRATED ARCHITECTURE
P.O. Box 7806, Edmond, OK 73083
405.509.7800 | integratedarc.com

Civil Engineer
wallace
410 N. Walnut Ave. Ste 200, Oklahoma City, OK 73104
405.236.5858 | wallacesc.com

Electrical Engineer
HP ENGINEERING
205 NW 63rd Street, Oklahoma City, OK 73116
405.286.9945 | hpengineeringinc.com

Graphic Design
Hoffer Waska creative
1443 S. Norfolk Ave, Tulsa, OK 74120
281.704.9729 |

City of Norman

RUBY GRANT PARK

AMENDMENT ONE
3110 WEST FRANKLIN ROAD
NORMAN, OKLAHOMA 73072

REVISIONS:

PROFESSIONAL SEAL:

LICENSED PROFESSIONAL ENGINEER Shawn Hoffman 24553 OKLAHOMA
CA5338(PE)

ISSUE DATE:
December 11, 2020

CONSTRUCTION DOCUMENTS

DRAWN BY: CHECKED BY:

SHEET NAME:
ENLARGED BLDG PLUMB PLANS

SHEET NUMBER:
P 2.01A

DRAWING IS NOT TO SCALE UNLESS PRINTED ON SHEET SIZE: 22"X34" (ANSI D)

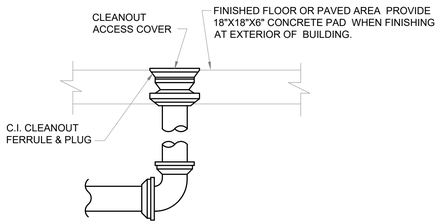

1 CLEANOUT TO GRADE DETAIL
nts

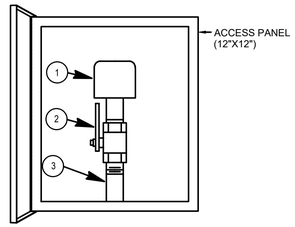

KEY

1. WATER HAMMER ARRESTOR
2. BALL VALVE, SAME NOMINAL SIZE AS PIPE BRANCH IN CHASE. OPENING IN BALL VALVE TO MATCH PIPE I.D.
3. PIPE SAME SIZE AS BRANCH IN CHASE TO WHICH IT IS ATTACHED.

NOTE: PROVIDE REDUCER IF REQUIRED BETWEEN VALVE AND WATER HAMMER ARRESTOR.

2 WATER HAMMER ARRESTOR DETAIL
NTS

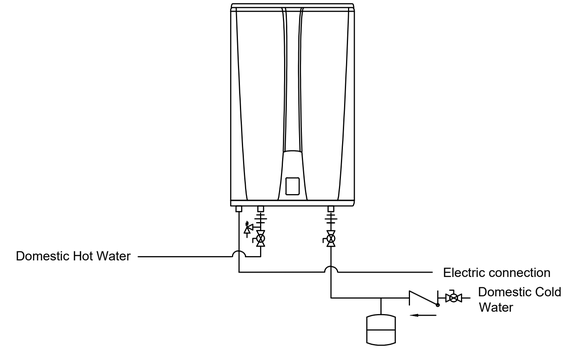

3 INSTANTANEOUS WATER HEATER DETAIL
nts

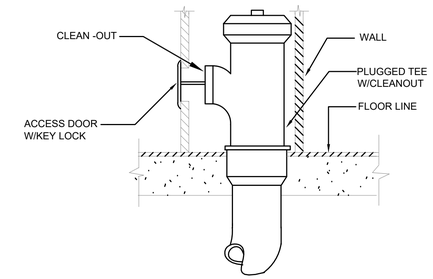

4 WALL/STACK CLEANOUT DETAIL
nts

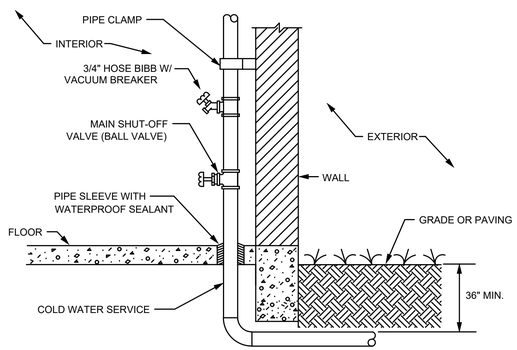

5 COLD WATER ENTRY DETAIL
NTS

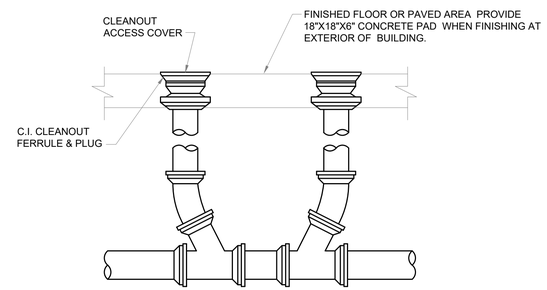

6 TWO-WAY CLEANOUT DETAIL
nts

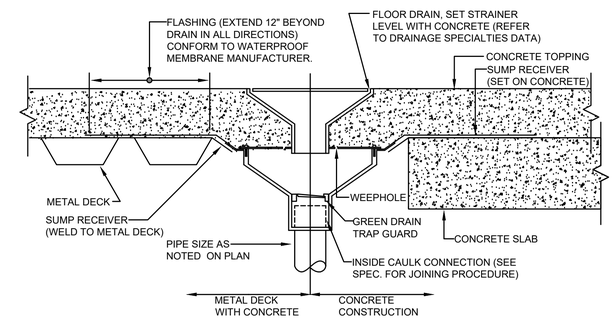

7 FLOOR DRAIN DETAIL
nts

Landscape Architect
howell & vancuren
601 S. Lewis Ave, Tulsa, OK 74104
918.592.1270 | howellvancuren.com

Architect
INTEGRATED ARCHITECTURE
P.O. Box 7806, Edmond, OK 73083
405.509.7800 | integratedarc.com

Civil Engineer
wallace
410 N. Walnut Ave. Ste 200, Oklahoma City, OK 73104
405.236.5858 | wallacesc.com

Electrical Engineer
HP ENGINEERING
205 NW 63rd Street, Oklahoma City, OK 73116
405.286.9945 | hpengineeringinc.com

Graphic Design
Hoffer Waska creative
1443 S. Norfolk Ave, Tulsa, OK 74120
281.704.9729 |

City of Norman
RUBY GRANT PARK
AMENDMENT ONE
3110 WEST FRANKLIN ROAD
NORMAN, OKLAHOMA 73072

REVISIONS:

PROFESSIONAL SEAL:

CA5338(PE)

ISSUE DATE:
December 11, 2020

CONSTRUCTION DOCUMENTS

DRAWN BY: CHECKED BY:

SHEET NAME:
PLUMBING DETAILS

SHEET NUMBER:
P 3.01A

DRAWING IS NOT TO SCALE UNLESS PRINTED ON SHEET SIZE: 22"x34" (ANSI D)

MECHANICAL DUCTWORK AND INSULATION SCHEDULE

SERVICE	DUCT TYPE	INSULATION TYPE	INSULATION THICKNESS
ALL RECTANGULAR AND ROUND LOW PRESSURE CONSTANT VOLUME SUPPLY AND RETURN AIR DUCTS FROM AIR HANDLER OR PACKAGED UNIT IN CONCEALED AREAS	GALVANIZED SHEET STEEL CONSTRUCTION PER MECHANICAL SPECIFICATIONS AND SMACNA DUCT CONSTRUCTION STANDARDS - METAL AND FLEXIBLE	FIBERGLASS WRAP OR MATTE FACED FIBERGLASS LINER. LINER ONLY ACCEPTABLE IF INDICATED ON PLANS.	2" WRAP OR 1-1/2" LINER
ALL RECTANGULAR AND ROUND LOW PRESSURE CONSTANT VOLUME SUPPLY AND RETURN AIR DUCTS FROM AIR HANDLER OR PACKAGED UNIT IN EXPOSED AREAS.	DOUBLE WALL GALVANIZED SHEET STEEL CONSTRUCTION PER MECHANICAL SPECIFICATIONS AND SMACNA DUCT CONSTRUCTION STANDARDS - METAL AND FLEXIBLE	MATTE FACED FIBERGLASS LINER.	1-1/2" LINER
ALL RECTANGULAR LOW PRESSURE CONSTANT VOLUME SUPPLY AND RETURN AIR DUCTS FROM AIR HANDLER OR PACKAGED UNIT IN EXTERIOR APPLICATIONS. DUCT SYSTEM SHALL BE BY THERMADUCT OR EQUAL.	PRE-INSULATED GALVANIZED SHEET STEEL CONSTRUCTION PER MECHANICAL SPECIFICATIONS AND SMACNA DUCT CONSTRUCTION STANDARDS - METAL AND FLEXIBLE.	CLOSED CELL FOAM RIGID INSULATION WITH WEATHER PROOF VINYL EXTERIOR CLADDING	2" LINER
ALL RUNOUTS TO SUPPLY DIFFUSERS AND RETURN GRILLES CONCEALED ABOVE CEILINGS	GALVANIZED SHEET STEEL CONSTRUCTION PER MECHANICAL SPECIFICATIONS AND SMACNA DUCT CONSTRUCTION STANDARDS - METAL AND FLEXIBLE	FIBERGLASS WRAP OR MATTE FACED FIBERGLASS LINER. LINER ONLY ACCEPTABLE IF INDICATED ON PLANS.	2" WRAP OR 1-1/2" LINER
ALL RUNOUTS TO SUPPLY DIFFUSERS AND RETURN GRILLES IN EXPOSED AREAS	GALVANIZED SHEET STEEL CONSTRUCTION PER MECHANICAL SPECIFICATIONS AND SMACNA DUCT CONSTRUCTION STANDARDS - METAL AND FLEXIBLE	MATTE FACED FIBERGLASS LINER	1-1/2" LINER
ALL SUPPLY AIR DIFFUSERS (BACK PAN, NOT EXPOSED TO SPACE)	N/A	FIBERGLASS WRAP	2" WRAP
GENERAL BUILDING EXHAUST DUCTS, ALL EXPOSED METAL SURFACES BETWEEN BUILDING EXTERIOR AND 10'-0" INTERIOR OF ISOLATION DAMPER	GALVANIZED SHEET STEEL CONSTRUCTION PER MECHANICAL SPECIFICATIONS AND SMACNA DUCT CONSTRUCTION STANDARDS - METAL AND FLEXIBLE	FIBERGLASS WRAP	2" WRAP

MECHANICAL PIPING AND INSULATION SCHEDULE

SERVICE	PIPING MATERIAL	INSULATION MATERIAL	INSULATION THICKNESS
EQUIPMENT DRAINS, COOLING CONDENSATE LINES, AND OVERFLOWS	SCHEDULE 40 PVC	ELASTOMERIC	3/8" IF INTERIOR SPACE N/A EXTERIOR SPACE

MECHANICAL LEGEND

A 100	SUPPLY AIR DEVICE	12x12	RECTANGULAR DUCT (FIRST DIMENSION, SIDE SHOWN)
R	RETURN AIR DEVICE	12" Ø	ROUND DUCT
E 100	EXHAUST AIR DEVICE		INTERNALLY LINED DUCT
A 100	SIDEWALL AIR DEVICE	T	THERMOSTAT (INSTALL 48" A.F.F.)
	MANUAL BALANCE DAMPER	TS OR HS	TEMPERATURE OR HUMIDITY SENSOR (INSTALL 48" A.F.F.)
EF-1	EQUIPMENT OR DEVICE TAG	(RECT.) (ROUND)	CONTINUATION SYMBOLS
	AIR FLOW ARROW		NEW CONNECTION POINT
F	FIRE DAMPER		LIMITS OF DEMOLITION

COMMON DEFINITIONS:

A.F.F.	ABOVE FINISHED FLOOR	(E)	EXISTING
A.F.G.	ABOVE FINISHED GRADE	O.R.	ON ROOF
ABV	ABOVE	MFR	MANUFACTURER
BLW	BELOW	EA	EXHAUST AIR
CD	CONDENSATE DRAIN	EAO	EXHAUST AIR OPENING
CFM	STANDARD CUBIC FEET PER MINUTE	EOA	EMERGENCY OUTSIDE AIR
IAW	IN ACCORDANCE WITH	RA	RETURN AIR
		SA	SUPPLY AIR
		MUA	MAKE UP AIR

GENERAL MECHANICAL NOTES

1. SUBMISSION OF PROPOSAL IN CONNECTION WITH THIS WORK SHALL IMPLY THAT THE BIDDER HAS EXAMINED THE JOB SITE UNDER WHICH HE WILL BE OBLIGATED TO OPERATE SHOULD HE BE AWARDED THE WORK UNDER THIS CONTRACT. NO EXTRA CHARGE WILL BE ALLOWED FOR FAILURE OF ANY BIDDER TO EXAMINE THE SITE PRIOR TO BID.
2. ALL DUCT SIZES SHOWN ARE THE AIRFLOW DIMENSIONS. DUCT DIMENSIONS DO NOT HAVE ALLOWANCES FOR INSULATION LINER, WHERE APPLICABLE, INSIDE THE DUCTS, OR DUAL WALL DIMENSIONS. DUCTS SHALL BE CONSTRUCTED TO INCLUDE INSULATION REQUIREMENTS AND MAINTAIN AIRFLOW DIMENSIONS INDICATED ON PLANS.
3. ALL WORK SHALL CONFORM TO STATE AND LOCAL CODES, RULES, REGULATIONS, AND ORDINANCES, WHICH SHALL TAKE PRECEDENCE OVER THE PLANS IF CONFLICTS EXIST BETWEEN THEM.
4. THE DRAWINGS INDICATE THE GENERAL LAYOUT REQUIREMENTS FOR EQUIPMENT, FIXTURES, PIPING, DUCTWORK, ETC. FINAL LAYOUT SHALL BE MODIFIED AS NECESSARY TO FIT ACTUAL SITE CONDITIONS. ALL REQUIRED REVISIONS SHALL BE RECORDED ON A DESIGNATED HARD COPY SET OF RED-LINE PLANS TO BE KEPT CURRENT TO JOBSITE PROGRESS. AT MINIMUM, THIS DOCUMENT SHALL BE UPDATED WEEKLY, AND READILY AVAILABLE FOR REVIEW AND REFERENCE.
5. COORDINATE ALL WORK WITH THE OWNER AND ALL OTHER CONTRACTORS. CONTRACTOR SHALL BE RESPONSIBLE FOR ALL RIGGING, HANDLING, AND PROTECTION OF MATERIALS. PROVIDE LABOR TO RECEIVE, UNLOAD, STORE, PROTECT, AND TRANSFER TO POINT OF INSTALLATION OF ANY OWNER FURNISHED ITEMS.
6. IN CASES OF EQUIPMENT SUBSTITUTION, CONTRACTOR IS RESPONSIBLE FOR VERIFYING THAT ALL SYSTEMS AND COMPONENTS WILL FIT PROPERLY PRIOR TO FABRICATION OR ODERING. INSTALLED DUCTS MAY BE RESIZED BY THE CONTRACTOR TO FIT FIELD CONDITIONS AS LONG AS THE INSTALLED DUCTS SHALL HAVE EQUAL FRICTION LOSS TO THOSE SHOWN. RECTANGULAR DUCTS SHALL NOT BE CHANGED TO ROUND DUCTS. PROVIDE COMPLETE SHEET METAL SHOP DRAWINGS TO ENGINEER SHOWING ACTUAL DUCT SIZES, ARRANGEMENTS, AND UNIT LOCATIONS TO BE INSTALLED. THIS SHALL BE DONE PRIOR TO FABRICATION OR INSTALLATION.
7. INSTALL ACOUSTIC TURNING VANES IN ELBOWS IN RECTANGULAR DUCTS 20" AND LARGER. INSTALL RADIUS TYPE ELBOWS IN RECTANGULAR DUCTS SMALLER THAN 20".
8. USE 45 DEGREE TAKE-OFF FITTINGS AT ALL ROUND SUPPLY BRANCH TAKEOFFS. PROVIDE BALANCE DAMPERS AT ALL SUPPLY DUCT RUNOUTS TO GRILLES. LOCATE AS FAR AS POSSIBLE FROM GRILLES IN AN ACCESSIBLE LOCATION. PROVIDE ACCESS PANELS IN SOLID WALLS AND CEILINGS FOR BALANCING DAMPERS.
9. USE FLEX DUCTS FOR FINAL CONNECTION TO ALL CEILING DIFFUSERS, AND WHERE NECESSARY, SIDEWALL DIFFUSERS, AND LIMIT TO 6' MAX. LENGTHS.
10. PROVIDE A COMPLETE AND OPERATING MECHANICAL SYSTEM, INCLUDING ALL INCIDENTAL ITEMS AND CONNECTIONS NECESSARY FOR PROPER OPERATION OR CUSTOMARILY INCLUDED, EVEN THOUGH EACH AND EVERY ITEM MAY NOT BE INDICATED.
11. THE MECHANICAL INSTALLATION SHALL BE SAFE, RELIABLE, ENERGY EFFICIENT AND EASILY MAINTAINED WITH ADEQUATE PROVISIONS ALLOWED FOR ACCESS TO EQUIPMENT.
12. THE MECHANICAL SYSTEM SHALL OPERATE QUIETLY WITH NOISE LEVELS BELOW THE CRITERIA RECOMMENDED FOR THE APPLICATION BY ASHRAE. PROVIDE CORRECTIVE ACTION AS REQUIRED TO REDUCE OBJECTIONABLE NOISE OR VIBRATION.
13. UNDERCUT DOORS 3/4 INCH WHERE NO RETURN NOR EXHAUST GRILLE IS SHOWN TO ALLOW FOR AIR TRANSFER (DO NOT UNDERCUT FIREDOORS.)
14. REFER TO ARCH. PLANS AND DETAILS FOR EXACT LOCATION OF ALL WALL AND CEILING MOUNTED DEVICES. ADJUST LOCATION OF SIDEWALL DEVICES AS NECESSARY TO AVOID INTERFERENCE WITH MOLDING OR OTHER ELECTRICAL DEVICES.
15. WHERE CONDUIT, CABLES, DUCTWORK OR PIPING PASSES THROUGH FIRE RATED FLOORS OR WALLS, THE SLEEEVES SHALL BE COMPLETELY SEALED WITH A FIRE STOP MATETERIAL THAT IS UL LISTED AND ACCCEPTED BY LOCAL AUTHORITIES HAVING JURISDICTION (AHJ) AS BEING SUITABLE FOR THIS SERVICE SUCH AS DOWN CORNING CORP "SILICONE ELASTOMER, RTV FOAM, OR SIMILAR MATERIAL TO MAINTAIN FIRE RATING OF THE WALL OR FLOOR.
16. CONTRACTOR SHALL BE RESPONSIBLE FOR THOROUGHLY COORDINATING PRIOR TO PERFORMING ALL CORING, BEAM, AND FLOOR PENETRATIONS AS IT RELATES TO HIS WORK.
17. IF A CENTRAL FIRE ALARM SYSTEM IS REQUIRED FOR THIS PROJECT, MECHANICAL CONTRACTOR SHALL INSTALL DUCT MOUNTED SMOKE DETECTORS PROVIDED BY FIRE ALARM CONTRACTOR. REFER TO ELECTRICAL NOTES FOR EXACT REQUIREMENTS. MECHANICAL CONTRACTOR SHALL IDENTIFY A SET OF TERMINALS FOR EQUIPMENT SHUTDOWN ON ALL FAN POWERED EQUIPMENT REQUIRING SHUTDOWN CONTROLS. FIRE ALARM CONTRACTOR SHALL WIRE FROM DUCT MOUNTED SMOKE DETECTOR TO SHUTDOWN TERMINALS TO SHUT DOWN FAN OPERATION WHEN SMOKE IS DETECTED.
18. CONTRACTOR SHALL NOT INSTALL ANY MAINTENANCE ITEMS ABOVE HARD CEILINGS. THIS SHALL INCLUDE VALVES, DAMPERS, OR ANY OTHER ITEMS THAT REQUIRE ACCESS AFTER CONSTRUCTION IS COMPLETED. IF INSTALLATION ABOVE A HARD CEILING OF THESE ITEMS CANNOT BE AVOIDED, PROVIDE CEILING ACCESS DOORS EQUAL TO ACUDOR MODEL FW-505 WHERE REQUIRED. AT FIRE-RATED WALLS, USE EQUIVALENT OF ACUDOR MODEL FB-5060. MINIMUM SIZE SHALL BE 12"x12". USE 18"x18" WHEN PERSONNEL ACCESS IS REQUIRED.
19. PROVIDE AN INSULATED BACK ON ALL THERMOSTATS AND TEMPERATURE SENSORS THAT ARE MOUNTED ON CMU, HOLLOW, OR EXTERIOR WALLS. PROVIDE SHALLOW DEVICE EXTENSION BOX BEHIND T-STATS AND SENSORS ON MASONRY WALLS IN COMMERCIAL/RETAIL SPACES.
20. PROVIDE FIRE DAMPERS AT ALL FIRE-RATED WALLS AND FLOOR PENETRATIONS. REFER TO ARCHITECTURAL DRAWINGS FOR FIRE BARRIER WALLS AND CEILINGS. PROVIDE ACCESS DOORS AT ALL FIRE/SMOKE DAMPERS AS REQUIRED. COORDINATE W/ ARCHITECT FOR LOCATION.
21. REFER TO ELECTRICAL DRAWINGS FOR SMOKE DAMPER AND FIRE/SMOKE DAMPER DETAIL. MECHANICAL CONTRACTOR SHALL PROVIDE AND INSTALL ALL DAMPERS WITH MOTORIZED ACTUATORS AND INSTALL SMOKE DETECTORS AND PROVIDE WIRING FOR FAN SHUTDOWN CONTROLS. COORDINATE WITH ELECTRICAL CONTRACTOR AND PROVIDE DAMPER ACTUATOR COMPATIBLE WITH ELECTRICAL WIRING PROVIDED. PROVIDE ANY WIRING OR COMPONENTS NOT PROVIDED BY THE ELECTRICAL CONTRACTOR THAT ARE REQUIRED TO PROVIDE A COMPLETE AND OPERATIONAL SYSTEM.
22. LINE VOLTAGE WIRING INSTALLED BY MECHANICAL CONTRACTOR SHALL BE ACCOMPLISHED ACCORDING TO ELECTRICAL DRAWINGS, NOTES, AND SPECIFICATIONS.

Landscape Architect
howell & vancuren
601 S. Lewis Ave, Tulsa, OK 74104
918.592.1270 | howellvancuren.com

Architect
INTEGRATED ARCHITECTURE
P.O. Box 7806, Edmond, OK 73083
405.509.7800 | integratedarc.com

Civil Engineer
wallace
410 N. Walnut Ave. Ste 200, Oklahoma City, OK 73104
405.236.5858 | wallacesc.com

Electrical Engineer
HP ENGINEERING
205 NW 63rd Street, Oklahoma City, OK 73116
405.286.9945 | hpengineeringinc.com

Graphic Design
Hoffer Waska creative
1443 S. Norfolk Ave, Tulsa, OK 74120
281.704.9729 |

City of Norman

RUBY GRANT PARK

AMENDMENT ONE
3110 WEST FRANKLIN ROAD
NORMAN, OKLAHOMA 73072

REVISIONS:

PROFESSIONAL SEAL:

LICENSED PROFESSIONAL ENGINEER
Shawn Hoffman
24553
OKLAHOMA
CA5338(PE)

ISSUE DATE:
December 11, 2020

CONSTRUCTION DOCUMENTS

DRAWN BY: CHECKED BY:

SHEET NAME:
MECHANICAL LEGEND AND GENERAL NOTES

SHEET NUMBER:
M 0.01A

DRAWING IS NOT TO SCALE UNLESS PRINTED ON SHEET SIZE: 22"X34" (ARCH D)

FAN SCHEDULE

TAG		EF-1
MANUFACTURER		GREENHECK
MODEL NO.		G-090-D
AIR FLOW-CFM		475
EXT.STATIC PRESS.-IN. WG.		0.4
TYPE		DOWNBLAST
FAN TYPE		CENTRIFUGAL
DRIVE TYPE		DIRECT
SOUND - SONES		7.4
MOTOR	HP	1/15
	RPM	1550
ELECTRICAL	VOLTAGE	115
	PHASE	1
	HERTZ	60
WEIGHT - LBS		26
REMARKS		1,2,3

REMARKS:

1. PROVIDE INTEGRAL DISCONNECT SWITCH, BACKDRAFT DAMPER, VIBRATION ISOLATORS, AND FLEX CONNECTIONS ON OUTLET.
2. PROVIDE ROOF CURB, NEMA 3R DISCONNECT SWITCH, AND BACKDRAFT DAMPER.
3. INTERLOCK WITH TIMECLOCK - REFER ELECTRICAL. PROVIDE WITH TRANSFORMER AND RELAYS AS REQUIRED FOR CONTROL. SCHEDULE TO OPERATE DURING OCCUPIED PERIODS. COORDINATE WITH OWNER.

ELECTRIC HEATER SCHEDULE

TAG		EH-1	EH-2	EH-3	EH-4
MANUFACTURER		QMARK	QMARK	QMARK	QMARK
MODEL NO.		EFF1500	CWH1101DSF	EFF1500	CWH1151DSF
TYPE		CEILING MOUNTED	WALL MOUNTED	CEILING MOUNTED	WALL MOUNTED
CFM		150	65	150	65
ELECTRICAL	KW	1.5	1.0	1.5	0.75
	VOLTAGE/PHASE	120/1	120/1	120/1	120/1
	FLA	12.5	8.3	12.5	6.3
WEIGHT - LBS		23	10	23	11
REMARKS		1,2	1,2	1,2	1,2

REMARKS:

1. PROVIDE WITH INTEGRAL DISCONNECT SWITCH AND RECESS MOUNTED.
2. PROVIDE WITH FACTORY WALL MOUNTED THERMOSTAT.

LOUVER SCHEDULE

MARK	MFR	MODEL	DESCRIPTION	SERVES	SIZE H x W	FREE AREA	MAX PRESS. DROP	REMARKS
LV-1	RUSKIN	ELF6375DX	6" DRAINABLE	100-MEN	16" x 16"	1.78 SQ.FT.	0.01"	1,2,3
LV-2	RUSKIN	ELF6375DX	6" DRAINABLE	100-MEN	16" x 16"	1.78 SQ.FT.	0.01"	1,2,3
LV-3	RUSKIN	ELF6375DX	6" DRAINABLE	101-FAMILY	16" x 16"	1.78 SQ.FT.	<0.01"	1,2,3
LV-4	RUSKIN	ELF6375DX	6" DRAINABLE	101-FAMILY	16" x 16"	1.78 SQ.FT.	<0.01"	1,2,3
LV-5	RUSKIN	ELF6375DX	6" DRAINABLE	102-WOMEN	16" x 16"	1.78 SQ.FT.	0.01"	1,2,3
LV-6	RUSKIN	ELF6375DX	6" DRAINABLE	102-WOMEN	16" x 16"	1.78 SQ.FT.	0.01"	1,2,3

NOTES:

1. PROVIDE LOUVER WITH MOTORIZED DAMPER INTERLOCKED WITH EF-1.
2. PROVIDE WITH ALUMINUM BIRDSCREEN.
3. COORDINATE LOUVER FINISH WITH ARCHITECT.

AIR DISTRIBUTION DEVICE SCHEDULE

MARK	DUTY	MANUFACTURER	MODEL	STYLE	SIZE	NECK	CFM (MIN-MAX)	RUNOUT SIZE	NC LEVEL	NOTES
EG1	EXHAUST	PRICE	510Z	FIXED DEFLECTION GRILLE	8X8	-	0-350	-	<20	1,2,3

NOTES:

1. ALL AIR DEVICES SHALL HAVE MANUFACTURER'S STANDARD CONSTRUCTION WITH WHITE FINISH UNLESS OTHERWISE NOTED. COORDINATE MOUNTING FRAME REQUIREMENTS WITH OTHER TRADES PRIOR TO ORDERING ANY DEVICE.
2. PROVIDE WITH LAY-IN FRAMES FOR HARD CEILINGS. COORDINATE DEVICE AND ACCESSORIES WITH ARCHITECTURAL CEILING PLANS.
3. PROVIDE WITH FACE-OPERATED BALANCING DAMPER INTEGRATED WITH AIR DEVICE, IN SECURE WALLS AND CEILINGS ONLY.
4. HARD DUCT CONNECTION REQUIRED WITH NO FLEX DUCT, WITH TRANSITION TO ROUND DUCT AS REQUIRED.
5. PROVIDE LINED PLENUMS WITH ALL LINEAR SLOT DIFFUSERS. PROVIDE INTEGRAL OPPOSED BLADE DAMPERS ACCESSIBLE THRU SLOTS.

Landscape Architect

howell & vancuren

601 S. Lewis Ave, Tulsa, OK 74104
918.592.1270 | howellvancuren.com

Architect

INTEGRATED ARCHITECTURE

P.O. Box 7806, Edmond, OK 73083
405.509.7800 | integratedarc.com

Civil Engineer

wallace

410 N. Walnut Ave. Ste 200, Oklahoma City, OK 73104
405.236.5858 | wallacesc.com

Electrical Engineer

HP ENGINEERING

205 NW 63rd Street, Oklahoma City, OK 73116
405.286.9945 | hpengineeringinc.com

Graphic Design

Hoffer Waska creative

1443 S. Norfolk Ave, Tulsa, OK 74120
281.704.9729 |

City of Norman

RUBY GRANT PARK

AMENDMENT ONE
3110 WEST FRANKLIN ROAD
NORMAN, OKLAHOMA 73072

REVISIONS:

PROFESSIONAL SEAL:

LICENSED PROFESSIONAL ENGINEER
Shawn Hoffman
24553
OKLAHOMA
CA5338(PE)

ISSUE DATE:
December 11, 2020

CONSTRUCTION DOCUMENTS

DRAWN BY: CHECKED BY:

SHEET NAME:
MECHANICAL SCHEDULES

SHEET NUMBER:
M 0.02A

DRAWING IS NOT TO SCALE UNLESS PRINTED ON SHEET SIZE: 22"x34" (ANSI D)

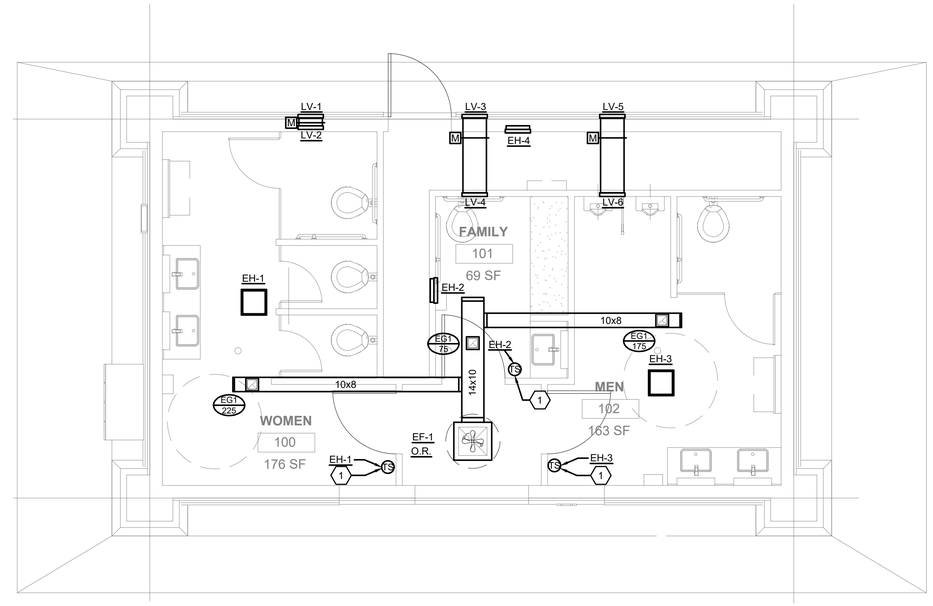

01 TYPICAL RESTROOM HVAC PLAN

SCALE: 1/4"=1'-0"

GENERAL HVAC NOTES

A. COORDINATE ROUTING OF DUCTWORK, PIPING, AND ACCESSORIES WITH THE LOCATIONS OF STRUCTURAL ELEMENTS PRIOR TO INSTALLATION.

B. RUN-OUT DUCT SIZES TO INDIVIDUAL AIR DISTRIBUTION DEVICES SHALL BE THE SAME AS THE NECK SIZE NOTED IN THE AIR DISTRIBUTION DEVICE SCHEDULE UNLESS OTHERWISE NOTED.

C. COORDINATE LOCATIONS OF AIR DISTRIBUTION DEVICES WITH ARCHITECTURAL REFLECTED CEILING PLAN, ELECTRICAL LIGHTING PLAN, AND MILLWORK PRIOR TO INSTALLATION.

D. ROUTE CONDENSATE DRAINS FROM EVAPORATOR COILS TO NEAREST APPROVED DRAIN AND TERMINATE WITH AIR GAP.

E. ROUTE REFRIGERANT LINES FROM EVAPORATOR COILS TO CONDENSING UNITS IN ACCORDANCE WITH MANUFACTURERS RECOMMENDATIONS.

F. ROUTE COMBUSTION AIR AND FLUES THRU ROOF W/ CONCENTRIC VENT ADAPTER AND TERMINATE PER MFR'S RECOMMENDATION.

G. LOCATE PLUMBING AND EXHAUST VENTS 10'-0" MINIMUM AWAY FROM OUTSIDE AIR INTAKES.

H. AIR TERMINAL DEVICES ON DUCT SIDEWALLS TO BE MOUNTED PERPENDICULAR TO FINISHED FLOOR.

HVAC KEY NOTES (X)

1. PROVIDE THERMOSTAT WITH TAMPER-PROOF ENCLOSURE.

0' 4' 8' 16'

Landscape Architect
howell & vancuren
601 S. Lewis Ave, Tulsa, OK 74104
918.592.1270 | howellvancuren.com

Architect
INTEGRATED ARCHITECTURE
P.O. Box 7806, Edmond, OK 73083
405.509.7800 | integratedarc.com

Civil Engineer
wallace
410 N. Walnut Ave. Ste 200, Oklahoma City, OK 73104
405.236.5858 | wallacesc.com

Electrical Engineer
HP ENGINEERING
205 NW 63rd Street, Oklahoma City, OK 73116
405.286.9945 | hpengineeringinc.com

Graphic Design
Hoffer Waska creative
1443 S. Norfolk Ave, Tulsa, OK 74120
281.704.9729 |

City of Norman

RUBY GRANT PARK

AMENDMENT ONE
3110 WEST FRANKLIN ROAD
NORMAN, OKLAHOMA 73072

REVISIONS:

PROFESSIONAL SEAL:

LICENSED PROFESSIONAL ENGINEER
Shawn Hoffman
24583
OKLAHOMA
CA5338(PE)

ISSUE DATE:
December 11, 2020

CONSTRUCTION DOCUMENTS

DRAWN BY: CHECKED BY:

SHEET NAME:
ENLARGED BLDG MECH PLANS

SHEET NUMBER:
M 1.01A

DRAWING IS NOT TO SCALE UNLESS PRINTED ON SHEET SIZE: 22"x34" (ANSI D)

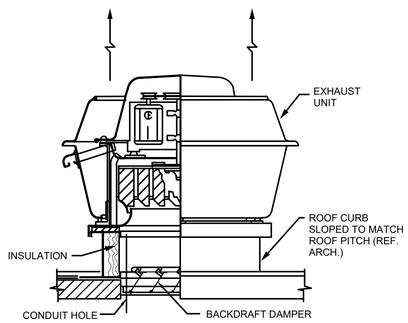

1 ROOF EXHAUST FAN DETAIL
NTS

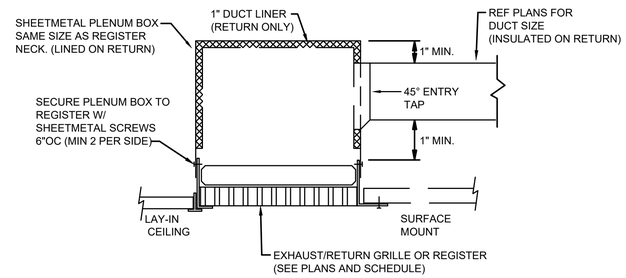

2 TYPICAL EXHAUST/RETURN INLET DETAIL
NTS

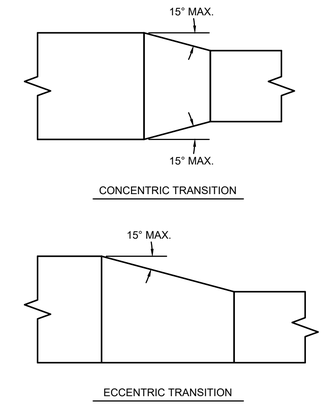

3 TYPICAL DUCT TRANSITION DETAIL
NTS

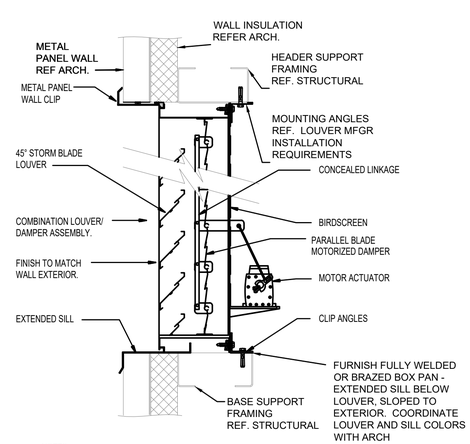

NOTES:

1. LOUVER/DAMPER ASSEMBLIES TO BE ASSEMBLED AT LOUVER MANUFACTURER FACTORY.
2. MOTOR ACTUATORS TO BE SIZED AND INSTALLED BY LOUVER MANUFACTURER.
3. INSTALLATION OF LOUVER TO BE IN ACCORDANCE WITH LOUVER MANUFACTURER'S RECOMMENDATIONS.

4 WALL LOUVER DETAIL
NTS

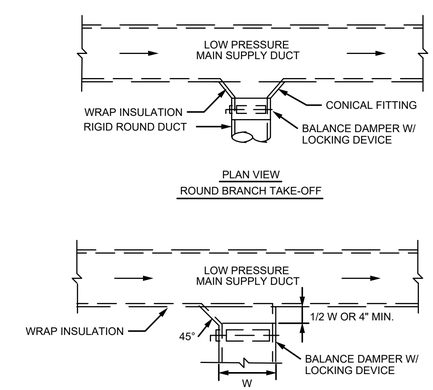

5 TYPICAL BRANCH TAKEOFF DETAIL
NTS

Landscape Architect
howell & vancuren
601 S. Lewis Ave, Tulsa, OK 74104
918.592.1270 | howellvancuren.com

Architect
INTEGRATED ARCHITECTURE
P.O. Box 7806, Edmond, OK 73083
405.509.7800 | integratedarc.com

Civil Engineer
wallace
410 N. Walnut Ave. Ste 200, Oklahoma City, OK 73104
405.236.5858 | wallacesc.com

Electrical Engineer
HP ENGINEERING
205 NW 63rd Street, Oklahoma City, OK 73116
405.286.9945 | hpengineeringinc.com

Graphic Design
Hoffer Waska creative
1443 S. Norfolk Ave, Tulsa, OK 74120
281.704.9729 |

City of Norman
RUBY GRANT PARK
AMENDMENT ONE
3110 WEST FRANKLIN ROAD
NORMAN, OKLAHOMA 73072

REVISIONS:

PROFESSIONAL SEAL:

CA5338(PE)

ISSUE DATE:
December 11, 2020

CONSTRUCTION DOCUMENTS

DRAWN BY: CHECKED BY:

SHEET NAME:
MECHANICAL DETAILS

SHEET NUMBER:
M 2.01A

DRAWING IS NOT TO SCALE UNLESS PRINTED ON SHEET SIZE: 22"x34" (ANSI D)

ELECTRICAL LEGEND

ABBREVIATIONS

AC	ABOVE COUNTER	MCC	MOTOR CONTROL CENTER
AFF	ABOVE FINISHED FLOOR	NEC	NATIONAL ELECTRICAL CODE
CB	CIRCUIT BREAKER	NEMA	NATIONAL ELECTRICAL MANUFACTURERS ASSOC.
E	EXISTING	NIC	NOT IN CONTRACT
EC	ELECTRICAL CONTRACTOR	NL	NIGHT LIGHT
EP	EXPLOSION PROOF	UG	UNDERGROUND
GFI	GROUND FAULT CIRCUIT INTERRUPTER	UON	UNLESS OTHERWISE NOTED
GR	GROUND	WP	WEATHERPROOF
HP	HORSE POWER	WR	WEATHER RESISTANT
IG	ISOLATED GROUND		
LCP	LIGHTING CONTROL PANEL.		

WIRING

WIRING CONCEALED IN CEILING OR WALLS UON. ALL WIRE IS NUMBER #12 AWG MINIMUM.

EXPOSED RACEWAY.

UNDERGROUND RACEWAY; TYPE, SIZE, CONDUCTORS, AND ARRANGEMENT BY NOTATION OR SCHEDULE.

SWITCHES

$* SWITCH MOUNTED AT +48"; SINGLE POLE UON. LOWER CASE LETTER, WHEN PRESENT, INDICATES FIXTURES CONTROLLED.

* ABBREVIATIONS FOR SWITCH:

- 2 DOUBLE POLE SWITCH
- 3 3-WAY SWITCH
- 4 4-WAY SWITCH
- D DIMMER SWITCH (SHALL BE COMPATIBLE WITH FIXTURE BEING DIMMED)
- W WIRELESS
- K KEYED SWITCH
- M MANUAL MOTOR STARTER
- F MOTOR RATED FUSED SWITCH - BUSSMAN SS SERIES WITH SA ADAPTOR AND MATCHING TYPE S OR SL (REJECTION PLUG) TIME DELAYED FUSE. SIZE PER NEC AND MFGR'S RECOMMENDATION.
- DO DIMMER DUAL TECH OCCUPANCY SENSOR
- OS DUAL TECHNOLOGY OCCUPANCY SENSOR
- T TIMER SWITCH

(M) CEILING MOUNTED LOW VOLTAGE DUAL TECHNOLOGY OCCUPANCY SENSOR WITH POWER PACK

(M)→ CORNER MOUNTED LOW VOLTAGE DUAL TECHNOLOGY OCCUPANCY SENSOR WITH POWER PACK

(PC) PHOTOCELL MOUNTED HIGH ON NORTH WALL FACING NORTH.

RECEPTACLES

DUPLEX RECEPTACLE (NEMA 5-20R)

DUPLEX RECEPTACLE (NEMA 5-20R); MOUNTED 6" ABOVE COUNTERTOP.

(ALL RECEPTACLE TYPES) WITH USB CHARGING PORTS

GFI DUPLEX RECEPTACLE (NEMA 5-20R)

GFI DUPLEX RECEPTACLE (NEMA 5-20R); MOUNTED 6" ABOVE COUNTERTOP.

QUADRUPLEX RECEPTACLE (TWO NEMA 5-20R)

SPECIAL RECEPTACLE: VERIFY NEMA TYPE WITH MANUFACTURER

COMBO FLOOR BOX WITH DATA: HUBBELL SYSTEM ONE, NON METALLIC FLOOR BOX, ADJUSTABLE MOUNTING CUP, PLATED COVER (COLOR BY ARCHITECT) DUPLEX MOUNTING PLATE WITH (2) KEYSTONE JACKS AND (1)-1.5"C FOR FLOOR BOX BELOW GRADE TO NEAREST ACCESSIBLE CEILING SPACE. . ON UPPER LEVELS USE POKE-THRU STYLE FLOOR BOXES: SYSTEM ONE POKE THRU SERIES IN SAME CONFIGURATION SEE ARCHITECTURAL PLANS FOR LOCATION UON.

SINGLE RECEPTACLE (NEMA 5-20R)

SPLIT WIRED DUPLEX RECEPTACLE (NEMA 5-20R)

FLOOR BOX: HUBBELL SYSTEM ONE, NON METALLIC FLOOR BOX, ADJUSTABLE MOUNTING CUP, PLATED COVER (COLOR BY ARCHITECT) DUPLEX MOUNTING PLATE.

CEILING MOUNTED RECEPTACLE(NEMA 5-20R)

PANELS AND MISC.

LIGHT OR POWER PANEL

4x4 JUNCTION BOX.

EQUIPMENT DISCONNECT: INTERIOR DISCONNECTS SHALL BE NEMA 1 TYPE. EXTERIOR DISCONNECTS SHALL BE NEMA 3R TYPE. SIZE AS INDICATED IN THE PLANS AND PER NAMEPLATE RATING.

COMBINATION MOTOR STARTER / DISC SWITCH: SIZE VARIES

ELECTRICAL NOTES

1. DRAWINGS ARE DIAGRAMMATIC ONLY AND REPRESENT THE GENERAL SCOPE OF THE WORK. REVIEW ALL GENERAL NOTES, SPECIFICATIONS AND PLANS FOR ADDITIONAL REQUIREMENTS THAT MAY NOT BE SPECIFICALLY CALLED OUT IN THIS PORTION OF THE CONSTRUCTION DOCUMENTS.
2. SPECIAL ATTENTION SHALL BE GIVEN TO ALL RACEWAYS WITHIN FINISHED AREAS WITHOUT CEILINGS AND EXPOSED TO STRUCTURE. IN GENERAL, ALL RACEWAYS SHALL BE CONCEALED WITHIN WALLS, ABOVE STRUCTURE FINISH, OR BELOW FLOOR SLABS WHEN SPECIFIED. WHERE EXPOSED CONDITIONS ARE NECESSARY OR UNAVOIDABLE DUE TO OTHER CONDITIONS, THE BID SHALL INCLUDE ANY REASONABLE MEANS TO MINIMIZE THE AMOUNT OF SURFACE MOUNTED EQUIPMENT. PRIOR TO ROUGH-IN, COORDINATE ALL EXPOSED RACEWAY AND BOX CONDITIONS WITH ARCHITECT PRIOR TO CONSTRUCTION OF WALLS, ROOF DECK, OR FLOOR SLABS. ATTACHMENT TO ROOF DECK OR JOIST WEBBINGS IS NOT ALLOWED, MAINTAIN A MINIMUM SPACING OF 1-1/2" FROM CONDUIT TO ROOF DECK. IN AREAS WHERE EXPOSED RACEWAYS ARE REQUIRED, INSTALL SYSTEMS SQUARE AND TIGHT TO STRUCTURE AND PAINT TO MATCH THE STRUCTURE PER ARCHITECT AND/OR OWNER SPECIFICATIONS. FAILURE TO PROPERLY COORDINATE THE ROUTING OF EXPOSED RACEWAYS MAY RESULT IN RELOCATION OF SUCH RACEWAYS AT NO ADDITIONAL COST TO THE OWNER.
3. OPENINGS AROUND ELECTRICAL PENETRATIONS THROUGH FIRE-RESISTANT-RATED WALLS, PARTITIONS, FLOORS OR CEILINGS SHALL BE FIRESTOPPED USING APPROVED METHODS TO MAINTAIN THE FIRE RESISTANCE RATING. PROVIDE PENETRATION FIRE STOPPING WITH RATINGS DETERMINED PER ASTM E 814 OR UL 1479. FIRE STOPPING SHALL NOT BE LESS THAN FIRE RESISTANCE RATING OF CONSTRUCTED PENETRATIONS.
4. FIELD MOUNTED DEVICES SUCH AS SWITCHES, MOTOR STARTERS, RECEPTACLES, ETC., ARE SHOWN IN THEIR APPROXIMATE LOCATION. SWITCH MOUNTING HEIGHT SHALL BE 48" ABOVE FINISHED FLOOR AND RECEPTACLE MOUNTING HEIGHT SHALL BE 18" ABOVE FINISHED FLOOR UON. REFER TO THE TYPICAL MOUNTING HEIGHT DETAIL.
5. INSTALL EQUIPMENT IN A MANNER TO REMAIN ACCESSIBLE WITH REASONABLE MEANS BY THE OWNER FOLLOWING COMPLETION OF WORK. SPECIAL ATTENTION AND ADDITIONAL COORDINATION IS EXPECTED IN AREAS OF THE BUILDING WHERE THE CEILING AND STRUCTURE HEIGHTS HAVE SIGNIFICANT DIFFERENT ELEVATIONS. EQUIPMENT REQUIRING POSSIBLE FUTURE ACCESS SHALL BE INSTALLED SUCH THAT IT MAY BE SAFELY ACCESSED FROM A STANDARD STEP LADDER OR PERSONNEL LIFT SUITABLE FOR THE LOCATION AND CEILING HEIGHT, WITHOUT REMOVING OR DAMAGING THE CEILING GRID STRUCTURE.
6. ALL WIRING DEVICE COVERPLATES SHALL INDICATE PANELBOARD AND CIRCUIT SERVING THE DEVICE. UTILIZE CLEAR VINYL (BLACK LETTERING) IDENTIFICATION LABLES MANUFACTURED BY 3M COMPANY (OR APPROVED EQUIVALENT).
7. JUNCTION BOXES LOCATED ABOVE GRID CEILINGS SHALL BE LOCATED NO GREATER THAN 4-FEET ABOVE THE CEILING IN A LOCATION ACCESSIBLE VIA A LADDER FROM THE ROOM BELOW.
8. ROOM NAMES/NUMBERS SHOWN IN PANELBOARD SCHEDULES ARE PER ARCHITECTURAL FLOOR PLANS. CONTRACTOR SHALL PROVIDE FINALIZED PANELBOARD SCHEDULES AT COMPLETION OF PROJECT WITH OWNER PROVIDED ROOM NAMES/NUMBERS.
9. PROVIDE A MINIMUM OF (3) SPARE 1" CONDUITS FROM RECESSED PANELBOARD, UP TO ACCESSIBLE CEILING SPACE.
10. ALL WORK IS TO BE PERFORMED IN STRICT COMPLIANCE WITH THE NATIONAL ELECTRICAL CODE, STATE LAWS, AND ALL OTHER REGULATIONS GOVERNING WORK OF THIS NATURE.
11. THE CONTRACTOR IS RESPONSIBLE FOR ALL WORK, MATERIAL, AND LABOR TO SATISFY A COMPLETE AND WORKING SYSTEM WHETHER SPECIFIED OR IMPLIED.
12. CONTRACTOR TO CONFIRM EXACT LOCATION OF EXISTING AND NEW EQUIPMENT.
13. THE CONTRACTOR SHALL FURNISH AND INSTALL ALL GROUNDING SYSTEMS (AS REQUIRED) IN ACCORDANCE WITH THE NATIONAL ELECTRIC CODE.
14. ALL ELECTRIC MATERIALS AND EQUIPMENT FOR THE PROJECT SHALL BE NEW AND U.L. OR EQUALLY LISTED.
15. SUBMIT TO THE OWNER CERTIFICATES OF INSPECTIONS IN DUPLICATE FROM AN APPROVED INSPECTION AGENCY UPON COMPLETION.
16. THE CONTRACTOR SHALL SECURE ALL PERMITS OR APPLICATIONS AND PAY ANY AND ALL FEES AS REQUIRED.
17. THE CONTRACTOR SHALL FURNISH ALL INSTRUMENTS AND QUALIFIED PERSONNEL OR FIRM TO PERFORM ALL REQUIRED TESTS.
18. NO EQUIPMENT SHALL BE ENERGIZED UNTIL ALL TEST AND ADJUSTMENTS HAVE BEEN MADE. THREE COPIES OF ALL TEST RESULTS SHALL BE DELIVERED TO THE OWNER
19. ALL ELECTRICAL WORK SHALL BE COORDINATED WITH THE MECHANICAL WORK AS CALLED FOR IN MECHANICAL SPECIFICATIONS AND PLANS.
20. COORDINATE ALL CEILING MOUNTED ELECTRICAL ITEMS WITH OTHER DISCIPLINES, WITH CEILING, AND STRUCTURE. REFER TO ARCHITECTURAL REFLECTED CEILING PLAN.

ELECTRICAL NOTES

21. FIELD VERIFY LOCATIONS OF EXISTING ELECTRICAL EQUIPMENT, INCLUDING POWER POLES, TELEPHONE PEDESTALS, OVERHEAD AND UNDERGROUND FEEDERS, METERS, PANELS, DEVICES, ETC. PROVIDE FOR COORDINATION WITH EXISTING EQUIPMENT.
22. HOME RUN CIRCUITS MORE THAN 100 FEET FROM THE PANELBOARD SHALL BE MADE WITH #10 AWG OR LARGER AS REQUIRED TO LIMIT VOLTAGE DROP TO 3% MAXMUM.
23. UNDERGROUND UTILITIES/FEEDERS/BRANCH CIRCUITS/ETC. SHALL NOT BE ROUTED THROUGH OR WITHIN 25 FEET OF ANY AREAS DEDICATED FOR FUTURE BUILDING ADDITION.
24. UNLESS NOTED OTHERWISE PROVIDE MINIMUM #8 AWG CONDUCTORS IN 1" CONDUIT(S) FOR ALL UNDERGROUND SITE POWER AND LIGHTING CIRCUITS. INCREASE CONDUCTOR AND RELATED CONDUIT SIZE AS NOTED OR OTHERWISE REQUIRED TO LIMIT VOLTAGE DROP TO LESS THAN 5% FOR THE ENTIRE LENGTH OF SYSTEM.
25. THE TYPE OF CONDUIT SHALL BE AS FOLLOWS FOR ALL FEEDERS AND DISTRIBUTION CIRCUITS, UNLESS OTHERWISE SPECIFIED.

    APPLICATION - TYPE OF CONDUIT

    BURIED IN CONCRETE OR OUTDOORS - PVC WITH RIGID GALVANIZED STEEL ELBOWS

    SERVICE ENTRANCE - GALVANIZED RIGID STEEL OR SERVICE UTILITY SPECIFICATIONS.
26. SEISMIC PROTECTION FOR SEISMIC CONCERNS OF ALL BUILDING SYSTEMS INCLUDING BUT NOT LIMITED TO MECHANICAL, PLUMBING, AND ELECTRICAL MUST MEET MINIMUM REQUIREMENTS OF ALL APPLICABLE CODES FOR BUILDINGS' CLASSIFIED SEISMIC USE GROUP AND SEISMIC DESIGN CATEGORY. ANY REQUIREMENTS FOR SEISMIC PROTECTION MEASURES TO BE APPLIED SHALL BE INSTALLED IN STRICT ACCORDANCE WITH ALL APPLICABLE LOCAL, STATE, AND/OR FEDERAL CODES AND WITH MANUFACTURER'S REQUIREMENTS, THE MOST STRINGENT SHALL APPLY.

    THE CONTRACTOR SHALL BE RESPONSIBLE FOR DETERMINING THE TYPE AND LOCATION OF SEISMIC RESTRAINTS REQUIRED FOR THE VARIOUS SYSTEM'S ELEMENTS CONTAINED IN THE CONSTRUCTION DOCUMENTS BASED ON THE RELATED SEISMIC CODE CRITERIA, THE SIZE AND WEIGHT OF THE SUPPORTED ELEMENT AND THE DISTANCE FROM STRUCTURE THAT THE ELEMENT WILL BE INSTALLED. IF REQUIRED BY LOCAL, STATE, FEDERAL CODES AND/OR OTHER AUTHORITY HAVING JURISDICTION (AHJ) THE CONTRACTOR SHALL SUBMIT DESCRIPTIVE CATALOG DATA OF SEISMIC RESTRAINTS, SHOP DRAWINGS SHOWING THE TYPES, LOCATIONS AND INSTALLATION DETAILS OF SEISMIC RESTRAINTS AND CALCULATIONS SHOWING THAT THE SEISMIC RESTRAINTS MEET THE SEISMIC REQUIREMENTS TO THE LOCAL AHJ FOR REVIEW AND APPROVAL. CALCULATIONS SHALL BE SIGNED AND SEALED BY A REGISTERED PROFESSIONAL ENGINEER, LICENSED IN THE STATE OF THE PROJECT LOCATION AND EMPLOYED BY THE MANUFACTURER OF THE SEISMIC RESTRAINT PRODUCTS. CALCULATIONS SHALL INCLUDE DEAD LOADS, STATIC SEISMIC LOADS AND CAPACITY OF MATERIALS UTILIZED FOR CONNECTIONS TO EQUIPMENT AND STRUCTURE.
27. ELECTRICAL SERVICE

    27.1. COORDINATE ALL SERVICE AND METERING DETAILS INCLUDING ANY RELOCATION OF EXISTING UTILITY LINES WITH POWER COMPANY.

    27.2. CONTRACTOR TO CONFIRM EXACT LOCATION OF METERS WITH ELECTRIC UTILITY.

    27.3. PAY ANY POWER COMPANY FEES CHARGED TO OWNER FOR SERVICE AND UTILITY LINE WORK ASSOCIATED WITH THIS PROJECT. THESE COSTS SHALL BE INCLUDED IN BIDS.

    27.4. FURNISH AND INSTALL MATERIALS FOR A TEMPORARY CONSTRUCTION SERVICE AS REQUIRED.

    27.5. FURNISH AND/OR INSTALL ALL REQUIRED MATERIAL AND LABOR IN COMPLIANCE WITH POWER COMPANY REQUIREMENTS TO PROVIDE A COMPLETE ELECTRICAL SERVICE, INCLUDING TRENCHING AND BACK FILLING, PRIMARY CONDUIT, CONCRETE TRANSFORMER PAD, SECONDARY CONDUITS AND CABLES, C.T. CABINET, METERING AND GROUNDING SYSTEM.

GENERAL POWER NOTES

1. ALL RECEPTACLES SHALL BE GROUNDING TYPE.
2. ALL RECEPTACLES INSTALLED IN BATHROOMS, OUTDOORS AND KITCHENS SHALL HAVE GROUND-FAULT CIRCUIT INTERRUPTER PROTECTION AS REQUIRED BY THE NATIONAL ELECTRIC CODE.
3. COORDINATE MECHANICAL EQUIPMENT CONNECTION REQUIREMENTS WITH MECHANICAL CONTRACTOR PRIOR TO ROUGH-IN. LOCATE FEEDERS, DISCONNECTS AND MAINTENANCE RECEPTACLES SO THAT THEY WILL NOT INTERFERE WITH OPERATION OR MAINTENANCE OF MECHANICAL EQUIPMENT.
4. PROVIDE POWER TO MECHANICAL, PLUMBING, AND ALL OTHER EQUIPMENT AS REQUIRED FOR PROPER OPERATION, COORDINATE AND VERIFY EACH PIECE OF EQUIPMENTS POWER/CONTROL REQUIRMENTS PRIOR TO ORDERING RELATED ELECTRICAL EQUIPMENT. REFER TO RELATED MECHANICAL, PLUMBING, AND OTHER RELATED DOCUMENTS FOR LOCATIONS OF EQUIPMENT AND REQUIRED CLEARANCES AROUND EQUIPMENT.
5. COORDINATE EXACT MOUNTING HEIGHT OF EACH ABOVE COUNTER RECEPTACLE WITH ARCHITECT AND OWNER PRIOR TO ROUGH-IN.
6. ALL OUTLETS LOCATED IN AREAS REQUIRING GROUND-FAULT CIRCUIT INTERRUPTER PROTECTION PER NEC-210 SHALL CONSIST OF A GFCI PROTECTED DEVICE, EVEN IF NOT SPECIFICALLY INDICATED IN THE DRAWINGS.

GENERAL LIGHTING NOTES

1. WHERE RECESSED LIGHTING FIXTURES ARE INDICATED IN A FIRE RATED CEILING, PROVIDE A ONE HOUR RATED "TENT" FOR FIXTURE
2. PROVIDE ALL MOUNTING AND SUPPORT HARDWARE FOR LIGHT FIXTURES TO MEET SPECIFIED MOUNTING HEIGHTS, REFER TO ARCHITECTURAL ELEVATIONS FOR EXACT MOUNTING HEIGHTS OF FIXTURES.
3. CONNECT "UN-SWITCHED" HOT CONDUCTOR FROM CIRCUIT SERVING SPACE LIGHTING TO EACH EXIT SIGN, EMERGENCY LIGHT, AND ANY FIXTURE DESIGNATED AS NIGHT LIGHT SERVING THE SPACE.
4. COORDINATE ALL DEVICES AND WALL-MOUNTED LIGHT FIXTURE LOCATIONS WITH THE ARCHITECTURAL WALL FINISHES AND ELEVATIONS. SPECIAL ATTENTION AND COORDINATION OF WALL TYPES AND FINISHES IS REQUIRED PRIOR TO ROUGH-IN. EXACT LOCATION OF DEVICES SHALL BE COORDINATED WITH THE ARCHITECT PRIOR TO ROUGH-IN TO AVOID INSTALLATION ON SPECIAL ARCHITCTURAL WALL FINISHES. DEVICES NOT PROPERLY COORDINATED WITH THE SPECIAL WALL FINISHES INDICATED IN THE CONSTRUCTION DOCUMENTS PRIOR TO ROUGH-IN SHALL BE RELOCATED AT NO ADDITIONAL COST TO THE OWNER.
5. ELECTRICAL CONTRATOR SHALL VERIFY CHEVRON DIRECTIONS OF ALL EXIT SIGNS PRIOR TO ORDERING.
6. FOR BATTERY FED EMERGENCY LIGHTS: PROVIDE EMERGENCY BALLAST. PROVIDE "HOT" WIRE TO EMERGENCY BALLAST. SWITCH FIXTURE AS INDICATED ON PLANS.
7. COORDINATE AND PROVIDE DIMMER SWITCHES RATED FOR AND COMPATABLE WITH INTENDED LIGHT FIXTURE(S) TO BE CONTROLLED. CIRCUITS CONTROLLED WITH LINE-VOLTAGE DIMMER SWITCHES SHALL NOT SHARE NEUTRAL CONDUCTORS.

Landscape Architect

howell & vancuren

601 S. Lewis Ave, Tulsa, OK 74104
918.592.1270 | howellvancuren.com

Architect

INTEGRATED ARCHITECTURE

P.O. Box 7806, Edmond, OK 73083
405.509.7800 | integratedarc.com

Civil Engineer

wallace

410 N. Walnut Ave. Ste 200, Oklahoma City, OK 73104
405.236.5858 | wallacesc.com

Electrical Engineer

HP ENGINEERING

205 NW 63rd Street, Oklahoma City, OK 73116
405.286.9945 | hpengineeringinc.com

Graphic Design

Hoffer Waska creative

1443 S. Norfolk Ave, Tulsa, OK 74120
281.704.9729 |

City of Norman

RUBY GRANT PARK

AMENDMENT ONE
3110 WEST FRANKLIN ROAD
NORMAN, OKLAHOMA 73072

REVISIONS:

PROFESSIONAL SEAL:

LICENSED PROFESSIONAL ENGINEER
Dustin C. Anderson
26893
OKLAHOMA

CA5338(PE)

ISSUE DATE:
December 11, 2020

CONSTRUCTION DOCUMENTS

DRAWN BY: CHECKED BY:

SHEET NAME:
ELECTRICAL SYMBOLS / NOTES

SHEET NUMBER:
E1.00A

DRAWING IS NOT TO SCALE UNLESS PRINTED ON SHEET SIZE: 22"x34" (ARCH D)

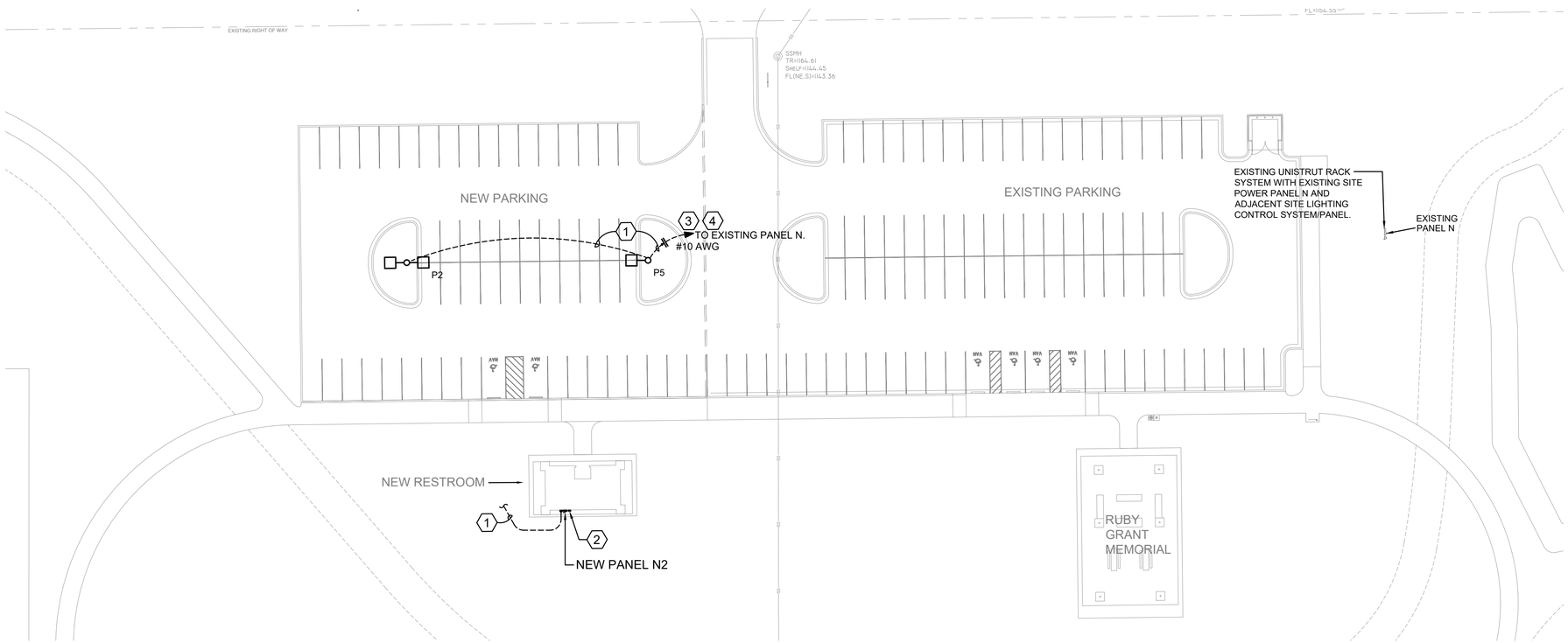

UTILITY GENERAL NOTES

1. ELECTRICAL SERVICE

1.1. COORDINATE ALL SERVICE AND METERING DETAILS INCLUDING ANY RELOCATION OF EXISTING UTILITY LINES WITH POWER COMPANY.

1.2. CONTRACTOR TO CONFIRM EXACT LOCATION OF METERS WITH ELECTRIC UTILITY.

1.3. PAY ANY POWER COMPANY FEES CHARGED TO OWNER FOR SERVICE AND UTILITY LINE WORK ASSOCIATED WITH THIS PROJECT. THESE COSTS SHALL BE INCLUDED IN BIDS.

1.4. FURNISH AND INSTALL MATERIALS FOR A TEMPORARY CONSTRUCTION SERVICE AS REQUIRED.

1.5. FURNISH AND/OR INSTALL ALL REQUIRED MATERIAL AND LABOR IN COMPLIANCE WITH POWER COMPANY REQUIREMENTS TO PROVIDE A COMPLETE ELECTRICAL SERVICE, INCLUDING TRENCHING AND BACK FILLING, PRIMARY CONDUIT, CONCRETE TRANSFORMER PAD, SECONDARY CONDUITS AND CABLES, C.T. CABINET, METERING AND GROUNDING SYSTEM.

ELECTRICAL GENERAL NOTES

A. BRANCH CIRCUIT CONDUCTORS SHALL NOT BE SMALLER THAN #12AWG. CONDUCTORS FOR 120V BRANCH CIRCUITS MORE THAN 100 FT SHALL NOT BE SMALLER THAN #10AWG AND MORE THAN 200 FT SHALL NOT BE SMALLER THAN #8AWG. UNLESS OTHERWISE NOTED.

B. WHEN WIRE SIZE IS DESIGNATED ADJACENT TO A HOME RUN. WIRE SIZE SHOWN SHALL BE UTILIZED FOR ENTIRE CIRCUIT (NOT HOME RUN ONLY).

C. REFER TO TYPICAL LIGHT POLE DETAIL FOR ADDITIONAL INFORMATION ON LIGHT POLE INSTALLATION.

D. PROVIDE LOCATOR / TRACER WIRE 12" ABOVE ALL BURIED BRANCH CIRCUITS.

E. SEE SHEET L2.11 FOR EXACT LIGHT POLE LOCATIONS.

ELECTRICAL PLAN NOTES

1. NEW UNDERGROUND SECONDARY. COORDINATE EXACT ROUTE AND DISTANCE TO SERVICE TRANSFORMER LOCATION WITH OG&E. SEE ONE LINE RISER DIAGRAM FOR FURTHER INFORMATION.
2. NEMA 3R LIGHTING TIMESWITCH WITH ASSOCIATED PHOTOCELL FOR CONTROL OF EXTERIOR LIGHTING. SEE ONELINE RISER DIAGRAM FOR FURTHER INFORMATION.
3. ROUTE AND CONNECT TO EXISTING PANEL N. UTILIZE SPARE 2P/20 AMP BREAKER.
4. VIA EXISTING LIGHTING CONTROL PANEL (ADJACENT TO PANEL N)WITH PHOTOCELL.
5. PROVIDE 1" SCHEDULE 40 PVC CONDUIT MIN. 24" BELOW GRADE. PROVIDE PVC COATED RGS CONDUIT STUB UPS AND UP INTO PANEL.

NOTE: NOT ALL NOTES APPEAR ON EVERY SHEET.

1 NORTH ELECTRICAL PLAN

0' 15' 30' 60' NORTH

Landscape Architect
howell & vancuren
601 S. Lewis Ave, Tulsa, OK 74104
918.592.1270 | howellvancuren.com

Architect
INTEGRATED ARCHITECTURE
P.O. Box 7806, Edmond, OK 73083
405.509.7800 | integratedarc.com

Civil Engineer
wallace
410 N. Walnut Ave. Ste 200, Oklahoma City, OK 73104
405.236.5858 | wallacesc.com

Electrical Engineer
HP ENGINEERING
205 NW 63rd Street, Oklahoma City, OK 73116
405.286.9945 | hpengineeringinc.com

Graphic Design
Hoffer Waska creative
1443 S. Norfolk Ave, Tulsa, OK 74120
281.704.9729 |

City of Norman

RUBY GRANT PARK

AMENDMENT ONE
3110 WEST FRANKLIN ROAD
NORMAN, OKLAHOMA 73072

REVISIONS:

PROFESSIONAL SEAL:

LICENSED PROFESSIONAL ENGINEER
Dustin C. Anderson
26893
OKLAHOMA

CA5338(PE)

ISSUE DATE:
December 11, 2020

CONSTRUCTION DOCUMENTS

DRAWN BY: CHECKED BY:

SHEET NAME:
NORTH ELECTRICAL PLAN

SHEET NUMBER:
E1.02A

DRAWING IS NOT TO SCALE UNLESS PRINTED ON SHEET SIZE: 22"x34" (ARCH D)

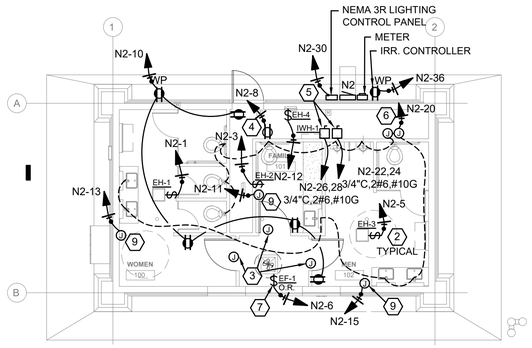

05 N. FUTURE RESTROOM ELEC PLAN

SCALE: 1/8"=1'-0"

NORTH

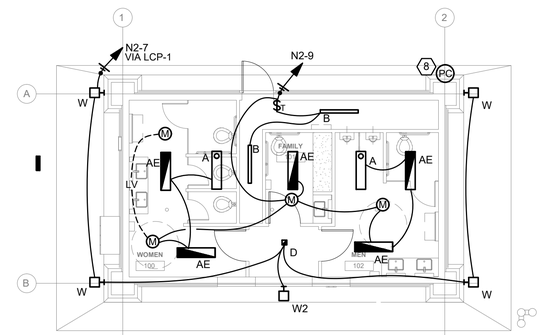

03 NORTH RESTROOM LIGHTING PLAN

SCALE: 1/8"=1'-0"

NORTH

NEW PANEL

Panel			
N2	ROOM EXTERIOR	VOLTS 240/120V 2P 3W	AIC 18,000
	MOUNTING SURFACE	BUS AMPS 225	MAIN BKR 225
	FED FROM UTILITY	NEUTRAL 100%	LUGS STANDARD
	NOTE NEMA 3R		

CKT #	CKT BKR	LOAD KVA	CIRCUIT DESCRIPTION		CKT #	CKT BKR	LOAD KVA	CIRCUIT DESCRIPTION
1	20/1	1.5	EH-1	a	2	60/2	0	SURGE PROTECTION DEVICE
3	20/1	1	EH-2	b	4	|		
5	20/1	1.5	EH-3	a	6	20/1	0.15	EXHAUST FAN
7	20/1	0.06	EXTERIOR R.R. LIGHTING	b	8	20/1	0.6	MAG DR CNTRL
9	20/1	0.296	RESTROOMS LIGHTING	a	10	20/1	0.9	RECEPTS
11	20/1	1.1	(LOCKABLE BKR) HAND DRYER	b	12	20/1	0.77	EH-4
13	20/1	1.1	(LOCKABLE BKR) HAND DRYER	a	14	20/1	0.9	LIGHTS PAV
15	20/1	1.1	(LOCKABLE BKR) HAND DRYER	b	16	20/1	0.9	LIGHTS PAV
17	20/1	0	SPARE	a	18	20/1	0.6	RECEPTS PAV
19	20/1	0	SPARE	b	20	20/1	0.36	SINK/TOILET SENSORS
21	20/1	0	SPARE	a	22	60/2	11.5	(CONN. 1) IWH-1
23	20/1	0	SPARE	b	24	|		
25	20/1	0	SPARE	a	26	60/2	11.5	(CONN. 2) IWH-1
27	20/1	0	SPARE	b	28	|		
29	20/1	0	SPARE	a	30	20/1	0.3	LCP
31	20/1	0	SPARE	b	32	20/1	0	IRR MTRS / HEAT TRACE
33	20/1	0	SPARE	a	34	20/1	0	IRRIGATION CONTROLLER
35	20/1	0	SPARE	b	36	20/1	0.3	EXTER. RECEPTS
37	20/1	0	SPARE	a	38	20/1	0	SPARE
39	20/2	0	SPARE	b	40	20/1	0	SPARE
41	|			a	42	20/1	0	SPARE

	CONN KVA	CALC KVA			CONN KVA	CALC KVA	
LIGHTING	2.16	2.7	(125%)	CONTINUOUS	0	0	(125%)
LARGEST MOTOR	0	0	(N/A)	HEATING	0	0	(N/A)
OTHER MOTORS	0	0	(100%)	COOLING	0	0	(N/A)
RECEPTACLES	2.7	2.7	(50%>10)	NONCONTINUOUS	28.3	28.3	(100%)
KITCHEN EQUIP	0	0	(N/A)	DIVERSE	3.3	1.65	(50%)
				METERED DEMAND	0	0	(125%)
				TOTAL KVA	36.4	35.3	
				BALANCED AMPS		147	

PHASE BALANCE PERCENT: PHASE A 103% PHASE B 97.1%

LIGHTING GENERAL NOTES

A. BRANCH CIRCUIT CONDUCTORS SHALL NOT BE SMALLER THAN #12AWG. CONDUCTORS FOR 120V BRANCH CIRCUITS MORE THAN 75 FT SHALL NOT BE SMALLER THAN #10AWG AND MORE THAN 200 FT SHALL NOT BE SMALLER THAN #8AWG.

B. REFER TO LIGHTING FIXTURE SCHEDULE FOR ADDITIONAL INFORMATION ON MOUNTING HEIGHTS OF WALL MOUNTED FIXTURES.

C. PULL UNSWITCHED HOT LEG TO EMERGENCY BATTERY PACKS AND EXIT SIGNS AS REQUIRED.

D. OCC SENSOR COVERAGE VARIES PER MANUFACTURER. IT IS THE CONTRACTORS RESPONSIBILITY TO VERIFY COMPLETE COVERAGE IN AREAS/ROOMS WITH SENSORS SHOWN WITH ACTUAL OCCUPANCY SENSORS PROVIDED. PROVIDE EXTENDED RANGE OCCUPANCY SENSORS OR ADDITIONAL OCCUPANCY SENSORS WHERE REQUIRED TO ACHIEVE FULL COVERAGE.

E. COORDINATE MOUNTING HEIGHTS OF ALL FIXTURES SUSPENDED AND WALL MOUNT WITH ARCHITECT PRIOR TO INSTALLATION.

F. IT IS THE CONTRACTORS RESPONSIBILITY TO PROVIDE ANY ADDITIONAL BRACING OR SUPPORT AS REQUIRED TO SUSPEND FANS AND LIGHT FIXTURES. BRACES / SUPPORTS SHALL BE PAINTED TO MATCH CEILING.

F. BACK SIDE OF ALL DEVICE PLATES AND FRONT SIDE OF ALL J-BOXES SHALL BE LABELED WITH PANEL AND CIRCUIT NUMBER. FACEPLATES WITH CLEAR STICK-ON LABEL AND $\frac{1}{2}$" LETTERING. J-BOXES "NEATLY" WITH STICK-ON LABEL WITH $\frac{1}{2}$" LETTERS MIN.

POWER GENERAL NOTES

A. ALL EQUIPMENT CONNECTIONS ARE BASED ON BASIS OF DESIGN EQUIPMENT. ACTUAL EQUIPMENT SHALL BE SELECTED DURING CONSTRUCTION. CONTRACTOR SHALL COORDINATE WITH ACTUAL EQUIPMENT PROVIDED AND ASSOCIATED CUT SHEETS BEFORE ROUGH-IN AND MODIFY DEVICES, BREAKERS, CONDUIT AND WIRING AS REQUIRED IN COORDINATION WITH PROJECT ENGINEER AT NO ADDITIONAL EXPENSE TO THE OWNER.

B. WHEN WIRE SIZE IS DESIGNATED ADJACENT TO A HOME RUN. WIRE SIZE SHOWN SHALL BE UTILIZED FOR ENTIRE CIRCUIT UNLESS OTHERWISE NOTED. (NOT HOME RUN ONLY).

C. PROVIDE ROUGH-IN FOR ALL THERMOSTAT LOCATIONS. COORDINATE WITH MECHANICAL.

D. BRANCH CIRCUIT CONDUCTORS SHALL NOT BE SMALLER THAN #12AWG. CONDUCTORS FOR 120V BRANCH CIRCUITS MORE THAN 75 FT SHALL NOT BE SMALLER THAN #10AWG AND MORE THAN 200 FT SHALL NOT BE SMALLER THAN #8AWG.

E. COORDINATE MOUNTING HEIGHTS OF ALL FIXTURES SUSPENDED AND WALL MOUNT WITH ARCHITECT PRIOR TO INSTALLATION.

F. IT IS THE CONTRACTORS RESPONSIBILITY TO PROVIDE ANY ADDITIONAL BRACING OR SUPPORT AS REQUIRED TO SUSPEND FANS AND LIGHT FIXTURES. BRACES / SUPPORTS SHALL BE PAINTED TO MATCH CEILING.

F. BACK SIDE OF ALL DEVICE PLATES AND FRONT SIDE OF ALL J-BOXES SHALL BE LABELED WITH PANEL AND CIRCUIT NUMBER. FACEPLATES WITH CLEAR STICK-ON LABEL AND $\frac{1}{2}$" LETTERING. J-BOXES "NEATLY" WITH STICK-ON LABEL WITH $\frac{1}{2}$" LETTERS MIN.

ELECTRICAL PLAN NOTES

1. EXISTING UNITSTRUT SUPPORT SYSTEM WITH UPRIGHTS SET IN CONCRETE.
2. DISCONNECT MEANS INTEGRAL TO HEATER. SEE MECHANICAL SCHEDULES. TYPICAL ALL HEATERS.
3. PROVIDE LOW VOLTAGE POWER WIRING TO MAG LOCK SYSTEM FOR DOOR PER MANUFACTURER'S WRITTEN INSTRUCTIONS.
4. PROVIDE 120V. POWER TO MAG LOCK DOOR CONTROLLER IN ACCESSIBLE LOCATION IN PLUMBING CHASE.
5. INSTANTANEOUS ELEC WTR HEATER LOCATED IN CHASE. PROVIDE DUAL CONNECTIONS, 60 AMP, NON-FUSED DISC. SWITCHES WITH WHIPS TO UNIT.
6. FLUSH VALVE AND FAUCET SENSORS - PROVIDE POWER TO POWER SUPPLY'S AND FIXTURES PER MANUFACTURER'S WRITTEN INSTRUCTIONS.
7. EXH FAN - PROVIDE 20 AMP, NEMA 3R, MOTOR RATED SWITCH AS MEANS OF DISCONNECT. (3) - 120V. MOTORIZED DAMPERS (ON SAME CIRCUIT) SHALL BE INTERLOCKED WITH FAN PER MFGR'S WRITTEN INSTRUCTIONS. ROUTE CIRCUIT THROUGH "LCP" RELAY FOR OPERATION VIA TIMESWITCH.
8. PHOTOCELL HIGH ON BLDG FACING NORTH..
9. ELEC HAND DRYER. COORDINATE EXACT LOCATION IN FIELD BEFORE ROUGH-IN. BREAKER SHALL BE LOCKABLE IN OFF POSITION.

0' 4' 8' 16'

Landscape Architect
howell & vancuren
601 S. Lewis Ave, Tulsa, OK 74104
918.592.1270 | howellvancuren.com

Architect
INTEGRATED ARCHITECTURE
P.O. Box 7806, Edmond, OK 73083
405.509.7800 | integratedarc.com

Civil Engineer
wallace
410 N. Walnut Ave. Ste 200, Oklahoma City, OK 73104
405.236.5858 | wallacesc.com

Electrical Engineer
HP ENGINEERING
205 NW 63rd Street, Oklahoma City, OK 73116
405.286.9945 | hpengineeringinc.com

Graphic Design
Hoffer Waska creative
1443 S. Norfolk Ave, Tulsa, OK 74120
281.704.9729 |

City of Norman

RUBY GRANT PARK

AMENDMENT ONE
3110 WEST FRANKLIN ROAD
NORMAN, OKLAHOMA 73072

REVISIONS:

PROFESSIONAL SEAL:

PROFESSIONAL ENGINEER
Dustin C. Anderson
26893
OKLAHOMA
LICENSED
12-11-2020

CA5338(PE)

ISSUE DATE:
December 11, 2020

CONSTRUCTION DOCUMENTS

DRAWN BY: CHECKED BY:

SHEET NAME:
ENLARGED BLDG ELEC PLANS

SHEET NUMBER:
E2.01A

DRAWING IS NOT TO SCALE UNLESS PRINTED ON SHEET SIZE: 22"x34" (ANSI D)

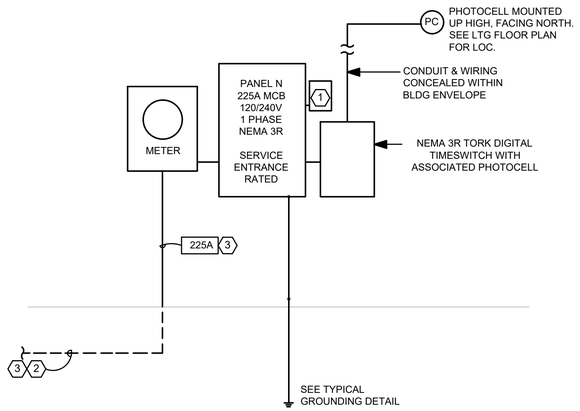

NOTES:

1. ALL EXPOSED CONDUIT ABOVE GRADE SHALL BE RIGID GALVANIZED STEEL. TRANSITIONS FROM PVC TO RIGID IN CONTACT WITH SOIL SHALL BE PVC WRAPPED RIGID GALVANIZED STEEL.

01 NEW ONELINE RISER DETAIL NORTH

SCALE: N.T.S.

RISER DIAGRAM GENERAL NOTES

A. THE ELECTRICAL CONTRACTOR SHALL VERIFY ALL SERVICE AND METERING REQUIREMENTS WITH THE UTILITY COMPANY PRIOR TO BID AND SHALL BE RESPONSIBLE FOR PROVIDING AND INSTALLING ALL MATERIAL AS REQUIRED BY THE SERVING UTILITY AS WELL AS COST INCURRED BY SERVING UTILITY.

B. THE ELECTRICAL CONTRACTOR SHALL VERIFY THE FAULT CURRENT AT THE SECONDARY OF THE TRANSFORMER WITH THE UTILITY COMPANY AND ADJUST THE ELECTRICAL PANEL AIC RATINGS TO THE NEXT HIGHER STANDARD RATING.

C. PROVIDE COPPER FEEDERS UNLESS OTHERWISE NOTED.

RISER PLAN NOTES

1. PROVIDE MVS INC. MODEL MV100 SURGE PROTECTION DEVICE (WEATHERPROOF) ADJACENT TO PANEL. MVC INC. - 1-806-371-0722. INSTALL PER MFGR'S WRITTEN INSTRUCTIONS.

2. CONDUIT SHALL BE FACTORY PVC COATED (NOT WRAPPED) RIGID STEEL MIN. 24" BELOW GRADE. TERMINATE AT SWEEP FOR CONNECTION TO PRIMARY PER OGE SPECIFICATION.

3. COORDINATE EXACT PRIMARY TRENCHING, CONDUIT AND WIRING REQUIREMENTS WITH ELECTRICAL UTILITY.

FEEDER SCHEDULE

AMPERAGE	SETS OF CONDUIT	CONDUIT SIZE	CONDUCTOR QTY/SIZE	GROUND QTY/SIZE	AMPERAGE	SETS OF CONDUIT	CONDUIT SIZE	CONDUCTOR QTY/SIZE	GROUND QTY/SIZE
15A	(1)	3/4"	(4) #12	(1) #12	225A	(1)	2 1/2"	(4) #4/0	(1) #4
20A	(1)	3/4"	(4) #12	(1) #12	250A	(1)	3"	(4) #250 KCMIL	(1) #4
25A	(1)	3/4"	(4) #10	(1) #10	300A	(2)	2"	(4) #1/0	(1) #4
30A	(1)	3/4"	(4) #10	(1) #10	400A	(2)	2 1/2"	(4) #3/0	(1) #3
40A	(1)	3/4"	(4) #8	(1) #10	450A	(2)	2 1/2"	(4) #4/0	(1) #2
45A	(1)	1"	(4) #6	(1) #10	500A	(2)	3"	(4) #250 KCMIL	(1) #2
50A	(1)	1"	(4) #6	(1) #10	600A	(2)	3"	(4) #350 KCMIL	(1) #1
60A	(1)	1 1/4"	(4) #4	(1) #10	800A	(3)	3"	(4) #300 KCMIL	(1) #1/0
70A	(1)	1 1/4"	(4) #4	(1) #8	1000A	(3)	3 1/2"	(4) #400 KCMIL	(1) #2/0
80A	(1)	1 1/2"	(4) #3	(1) #8	1200A	(4)	3 1/2"	(4) #350 KCMIL	(1) #3/0
90A	(1)	1 1/2"	(4) #2	(1) #8	1600A	(5)	3 1/2"	(4) #400 KCMIL	(1) #4/0
100A	(1)	2"	(4) #1	(1) #8	2000A	(6)	3 1/2"	(4) #400 KCMIL	(1) #250 KCMIL
125A	(1)	2"	(4) #1	(1) #6	2500A	(7)	3 1/2"	(4) #500 KCMIL	(1) #350 KCMIL
150A	(1)	2"	(4) #1/0	(1) #6	3000A	(8)	3 1/2"	(4) #500 KCMIL	(1) #400 KCMIL
175A	(1)	2"	(4) #2/0	(1) #6	3500A	(10)	3 1/2"	(4) #500 KCMIL	(1) #500 KCMIL
200A	(1)	2 1/2"	(4) #3/0	(1) #6	4000A	(10)	4"	(4) #600 KCMIL	(1) #500 KCMIL

FEEDER SIZE GENERAL NOTES:

1. CONDUCTOR QUANTITY BASED ON 3-PHASE, 4-WIRE; FOR EQUIPMENT THAT DOES NOT REQUIRE A NEUTRAL OR IS SINGLE PHASE DEDUCT FROM QUANTITY AS REQUIRED.
2. CONDUCTOR SIZES BASED ON NEC TABLE 310.16 - COPPER 60°C UP TO 100AMPS, 75°C GREATER THAN 100AMPS.
3. GROUND SIZES BASED ON NEC TABLE 250.122 - COPPER
4. CONDUIT FILL BASED ON NEC ANNEX C - THW CONDUCTOR INSULATION

Landscape Architect
howell & vancuren
601 S. Lewis Ave, Tulsa, OK 74104
918.592.1270 | howellvancuren.com

Architect
INTEGRATED ARCHITECTURE
P.O. Box 7806, Edmond, OK 73083
405.509.7800 | integratedarc.com

Civil Engineer
wallace
410 N. Walnut Ave. Ste 200, Oklahoma City, OK 73104
405.236.5858 | wallacesc.com

Electrical Engineer
HP ENGINEERING
205 NW 63rd Street, Oklahoma City, OK 73116
405.286.9945 | hpengineeringinc.com

Graphic Design
Hoffer Waska creative
1443 S. Norfolk Ave, Tulsa, OK 74120
281.704.9729 |

City of Norman

RUBY GRANT PARK

AMENDMENT ONE
3110 WEST FRANKLIN ROAD
NORMAN, OKLAHOMA 73072

REVISIONS:

PROFESSIONAL SEAL:

PROFESSIONAL ENGINEER
LICENSED
Dustin C. Anderson
26893
OKLAHOMA
CA5338(PE)

ISSUE DATE:
December 11, 2020

CONSTRUCTION DOCUMENTS

DRAWN BY: CHECKED BY:

SHEET NAME:
ELECTRICAL RISER DIAGRAMS

SHEET NUMBER:
E3.01A

DRAWING IS NOT TO SCALE UNLESS PRINTED ON SHEET SIZE: 22"x34" (ANSI D)

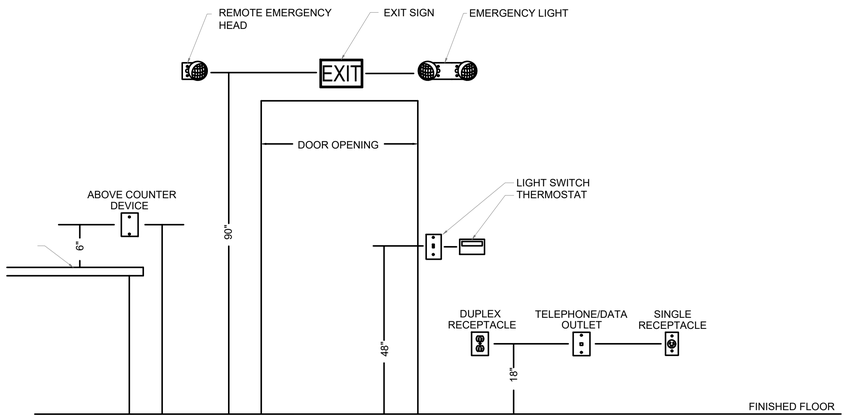

NOTES: VERIFY EXACT MOUNTING HEIGHTS WITH PROJECT REQUIREMENTS. DEVICES MAY OR MAY NOT APPLY TO THIS PROJECT. REFER TO PLANS.

ALL SWITCHES, PULL STATIONS, STROBES, HORNS, & THERMOSTATS TO BE INSTALLED WITHIN 6" (OR AS CLOSE AS POSSIBLE) TO DOORWAYS.

01 TYPICAL MOUNTING HEIGHT DETAIL

SCALE: N.T.S.

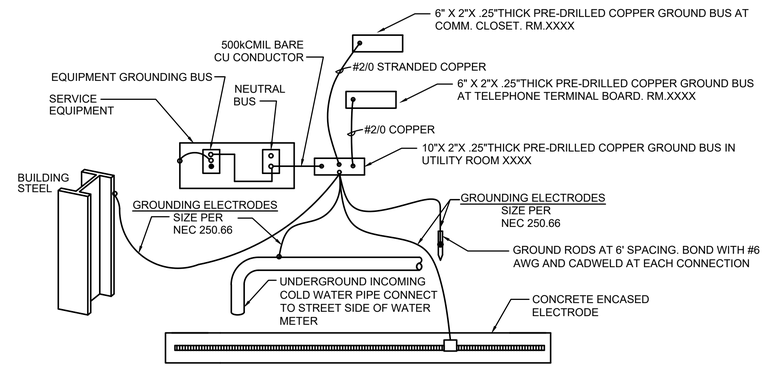

02 TYPICAL GROUNDING DETAIL

SCALE: N.T.S.

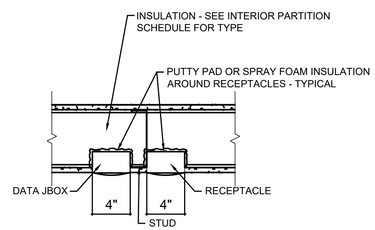

03 TYPICAL RECEPTACLE/DATA DETAIL

SCALE: N.T.S.

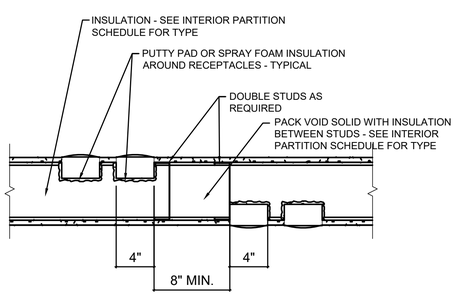

04 TYPICAL BACK TO BACK ELECTRICAL DEVICES

SCALE: N.T.S.

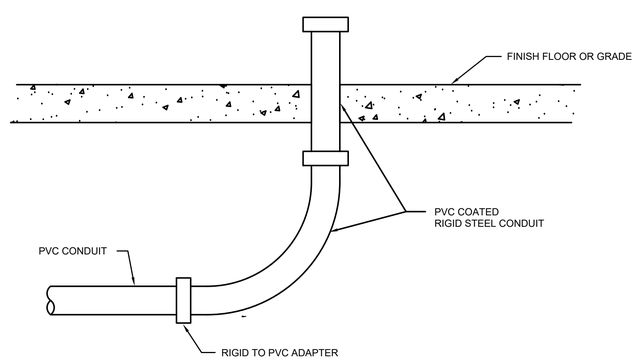

05 TYPICAL CONDUIT STUB UP DETAIL

SCALE: N.T.S.

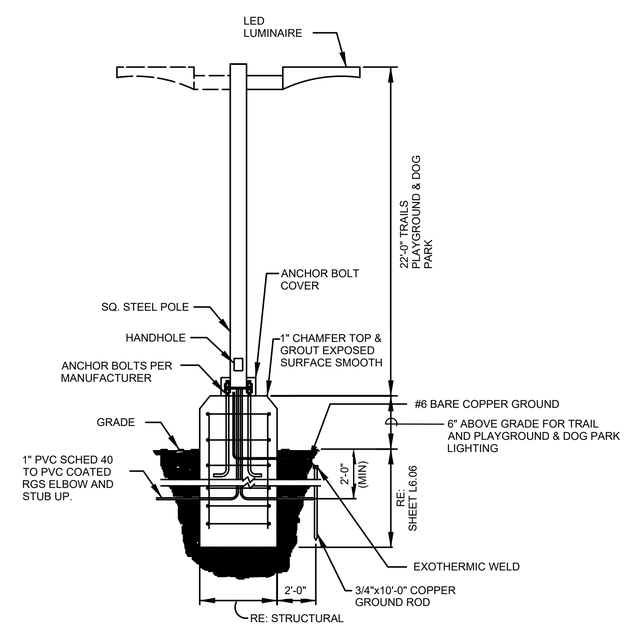

06 TYPICAL LIGHT POLE DETAIL

SCALE: N.T.S.

Landscape Architect
howell & vancuren
601 S. Lewis Ave, Tulsa, OK 74104
918.592.1270 | howellvancuren.com

Architect
INTEGRATED ARCHITECTURE
P.O. Box 7806, Edmond, OK 73083
405.509.7800 | integratedarc.com

Civil Engineer
wallace
410 N. Walnut Ave. Ste 200, Oklahoma City, OK 73104
405.236.5858 | wallacesc.com

Electrical Engineer
HP ENGINEERING
205 NW 63rd Street, Oklahoma City, OK 73116
405.286.9945 | hpengineeringinc.com

Graphic Design
Hoffer Waska creative
1443 S. Norfolk Ave, Tulsa, OK 74120
281.704.9729 |

City of Norman

RUBY GRANT PARK

AMENDMENT ONE
3110 WEST FRANKLIN ROAD
NORMAN, OKLAHOMA 73072

REVISIONS:

PROFESSIONAL SEAL:

LICENSED PROFESSIONAL ENGINEER Dustin C. Anderson 26893 OKLAHOMA

CA5338(PE)

ISSUE DATE:
December 11, 2020

CONSTRUCTION DOCUMENTS

DRAWN BY: CHECKED BY:

SHEET NAME:
ELECTRICAL DETAILS

SHEET NUMBER:
E3.02A

DRAWING IS NOT TO SCALE UNLESS PRINTED ON SHEET SIZE: 22"x34" (ARCH D)

LUMINAIRE SCHEDULE

CALLOUT	SYMBOL	MODEL	DESCRIPTION	LAMP	INPUT WATTS	BALLAST	MOUNTING	VOLTS
A		LCD CRN-LED SERIES	RECESSED 1X4 LED, VANDAL RESISTANT - 18 GAUGE PAINTED, 3500K, 3000 LUMEN, 120V, .OPTIC PLUS LED DIFFUSING ACRYLIC INNER LENS, .187 CLEAR POLYCARBONATE OUTER LENS, DAMP LOCATION	LED	50	ELECTRONIC LED DRIVER	CEILING	120V 1P 2W
AE		LCD CRN-LED SERIES	RECESSED 1X4 LED, VANDAL RESISTANT - 18 GAUGE PAINTED, 3500K, 3000 LUMEN, 120V, .OPTIC PLUS LED DIFFUSING ACRYLIC INNER LENS, .187 CLEAR POLYCARBONATE OUTER LENS, DAMP LOCATION, 90 MIN EMERG BATTERY PACK	LED	30	ELECTRONIC LED DRIVER	CEILING	120V 1P 2W
B		LSI SDL4 SERIES	4' LED STRIP, 3500K, 3000 LUMEN, 120V, FROSTED LENS.	LED	23	ELECTRONIC LED DRIVER	CEILING	120V 1P 2W
D		WILLIAMS 6PS LED SERIES	6" SQUARE DOWNLIGHT, 1500 LUMEN, LED, 4000K, EMERG BATTERY PACK, WIDE DISTRIBUTION, WET/CC LISTED.	LED	16	ELECTRONIC LED DRIVER	CEILING	240V 2P 2W
P2		LSI SLICE MEDIUM SERIES	LED POLE LIGHT, TWO HEADS, 36,000 LUMENS, 4000K, TYPE FT DISTRIBUTION, 240V,WITH 20' SQUARE STEEL POLE ON CONCRETE BASE (SEE TYPICAL LIGHT POLE DETAIL) 100 MPH WIND RATING.COLOR BY ARCHITECT.	(1) LED	540	ELECTRONIC LED DRIVER	POLE	240V 2P 2W
P5		LSI SLICE MEDIUM SERIES	LED POLE LIGHT, ONE HEADS, 36,000 LUMENS, 4000K, TYPE FT DISTRIBUTION, 240V,WITH 20' SQUARE STEEL POLE ON CONCRETE BASE (SEE TYPICAL LIGHT POLE DETAIL) 100 MPH WIND RATING.COLOR BY ARCHITECT.	(1) LED	270	ELECTRONIC LED DRIVER	POLE	240V 2P 2W
W		ASL LIGHTING LAC SERIES LANTERN	18.5" TALL ARCHITECTURAL LED WALL MOUNT LANTERN, 4000K, 12 WATT GU24 LED BULB	LED	15	ELECTRONIC LED DRIVER	WALL	120V 1P 2W
W2		PERFORMANCE IN LIGHTING MIMIK 20 FLAT B SERIES	SURFACE WALL MOUNT, 25 WATT LED UP AND DOWN LIGHT, 80CRI, 4000K, 2100 LUMENS	LED	15	ELECTRONIC LED DRIVER	WALL	120V 1P 2W

A. EC SHALL PROVIDE A SUBMITTAL PACKAGE INCLUDING CUTSHEETS FOR EACH FIXTURE.
B. EC SHALL PROVIDE ALL ACCESSORIES FOR A COMPLETE ASSEMBLY INCLUDING MOUNTING HARDWARE.
C. THE MOUNTING TYPE OF EACH FIXTURE SHALL BE COMPATIBLE WITH INSTALLATION SURFACE OF EACH FIXTURE.
D. ALL FINISHES SHALL BE COORDINATED WITH ARCHITECT AND DOCUMENTED ON SUBMITTALS.
E. EC SHALL PROVIDE THIS FIXTURE U.L. LISTED AND LABELED FOR WET LOCATIONS.
F. PROVIDE A COLD WEATHER RATED BALLAST FOR OUTDOOR APPLICATIONS.

LIGHTING TIMESWITCH PROGRAMMING SCHEDULE

TORK DGLC DIGITAL TIMESWITCH WITH PHOTOCELL (NEMA 3R)

CIRCUIT #	DESCRIPTION	LV CONTROL	SCHEDULE
1	PERIMETER RESTROOM LIGHTS	PHOTOCELL/TIMESWITCH	ON AT DUSK, OFF AT DAWN
2	RESTROOM EXHAUST FAN & ASSOC. MOTORIZED DAMPERS	TIMESWITCH	OPEN HOURS, COORD W/ OWNER

Landscape Architect
howell & vancuren
601 S. Lewis Ave, Tulsa, OK 74104
918.592.1270 | howellvancuren.com

Architect
INTEGRATED ARCHITECTURE
P.O. Box 7806, Edmond, OK 73083
405.509.7800 | integratedarc.com

Civil Engineer
wallace
410 N. Walnut Ave. Ste 200, Oklahoma City, OK 73104
405.236.5858 | wallacesc.com

Electrical Engineer
HP ENGINEERING
205 NW 63rd Street, Oklahoma City, OK 73116
405.286.9945 | hpengineeringinc.com

Graphic Design
Hoffer Waska creative
1443 S. Norfolk Ave, Tulsa, OK 74120
281.704.9729 |

City of Norman
RUBY GRANT PARK
AMENDMENT ONE
3110 WEST FRANKLIN ROAD
NORMAN, OKLAHOMA 73072

REVISIONS:

PROFESSIONAL SEAL:
LICENSED PROFESSIONAL ENGINEER
Dustin C. Anderson
26893
OKLAHOMA
CA5338(PE)

ISSUE DATE:
December 11, 2020

CONSTRUCTION DOCUMENTS

DRAWN BY: CHECKED BY:

SHEET NAME:
LIGHTING SCHEDULES

SHEET NUMBER:
E4.02A

DRAWING IS NOT TO SCALE UNLESS PRINTED ON SHEET SIZE: 22"x34" (ARCH D)

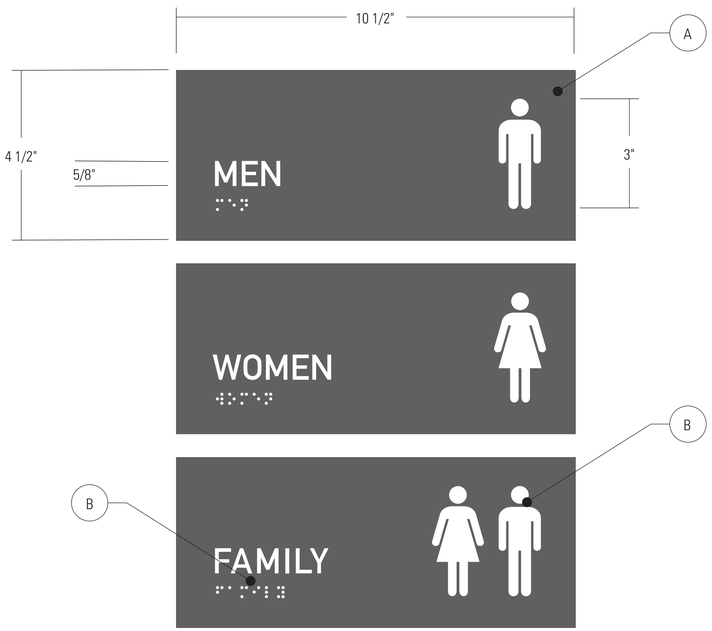

A 1/4" THICK ACRYLIC BACK PLATE WITH APPLIED EXTERIOR GRADE PHOTOPOLYMER FACE WITH RAISED COPY, BRAILLE AND SYMBOLS - NO APPLIED COPY/BRAILLE

B COPY AND SYMBOLS TIP-SCREEN: (TBD) SIGN FACE PAINTS (TBD) ALL SURFACES BRAILLE REMAINS FIELD COLOR

PIN MOUNT SIGN TO WALL SURFACE AS REQUIRED

TOTAL QTY: 1 OF EACH LAYOUT SHOWN, 3 SIGNS TOTAL

1 Restroom Identification Plaque

Half Scale

2 Side View

Half Scale

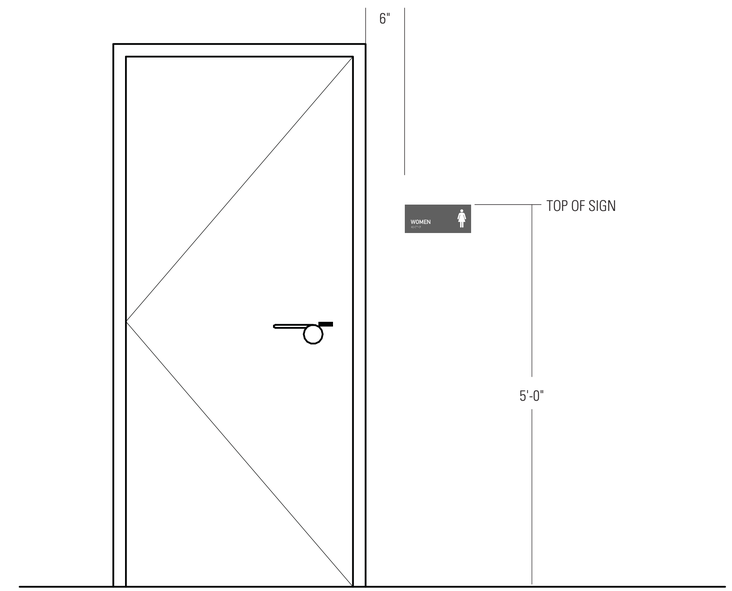

3 Restroom Entrance (Typical)

Scale: 1" = 1'- 0"

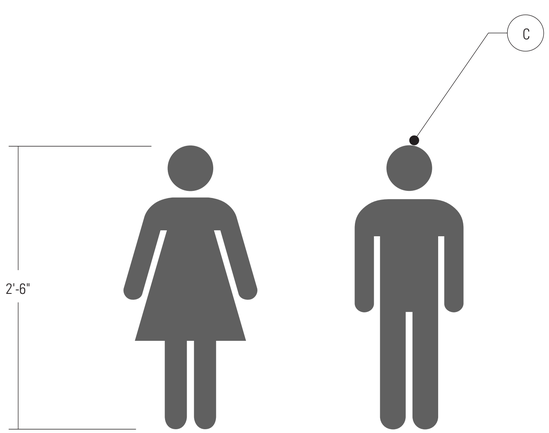

C 1/4" THICK ALUMINUM SYMBOLS PAINT: (TBD) PIN MOUNT TO MASONRY WALL SURFACE AS REQUIRED

TOTAL QTY: 1 OF EACH SYMBOL SHOWN, 2 RESTROOM SYMBOLS TOTAL

4 Restroom Symbols

Scale: 1 1/2" = 1'- 0"

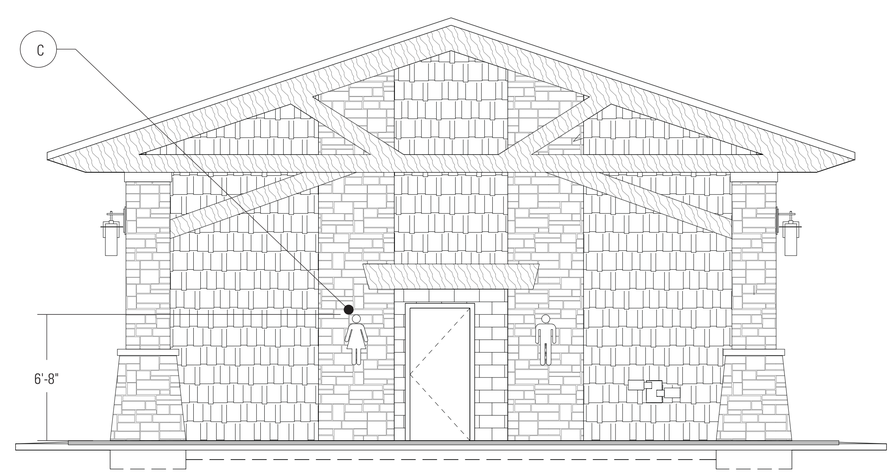

5 Restroom Structure (South Elevation)

Scale: 1/4" = 1'- 0"

Landscape Architect

howell & vancuren

601 S. Lewis Ave, Tulsa, OK 74104
918.592.1270 | howellvancuren.com

Architect

INTEGRATED ARCHITECTURE

P.O. Box 7806, Edmond, OK 73083
405.509.7800 | integratedarc.com

Civil Engineer

wallace

410 N. Walnut Ave. Ste 200, Oklahoma City, OK 73104
405.236.5858 | wallacesc.com

Electrical Engineer

HP ENGINEERING

205 NW 63rd Street, Oklahoma City, OK 73116
405.286.9945 | hpengineeringinc.com

Graphic Design

Hoffer Waska creative

1443 S. Norfolk Ave, Tulsa, OK 74120
281.704.9729 |

City of Norman

RUBY GRANT PARK

AMENDMENT ONE

3110 WEST FRANKLIN ROAD
NORMAN, OKLAHOMA 73072

REVISIONS:

PROFESSIONAL SEAL:

OKLAHOMA Joe Howell REGISTERED LANDSCAPE ARCHITECT 10

12/11/20

ISSUE DATE:

December 11, 2020

CONSTRUCTION DOCUMENTS

DRAWN BY: HW CHECKED BY: H&V

SHEET NAME:

RESTROOM SIGNAGE

SHEET NUMBER:

W 2.02A

DRAWING IS NOT TO SCALE UNLESS PRINTED ON SHEET SIZE: 22"x34" (ARCH D)

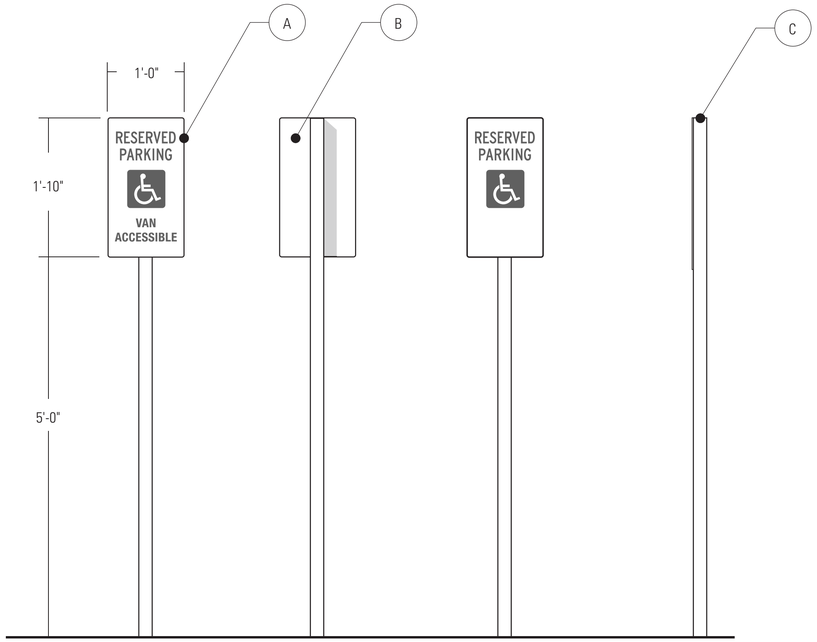

TOTAL QTY: 2 "VAN ACCESSIBLE" SIGNS

1 Reserved Parking Sign

Scale: 3/4" = 1'- 0"

(A) 1/8" THICK ALUMINUM SIGN PANEL PAINTS:
(TBD) FACE AND RETURNS

SLIGHT RADIUS AT CORNERS TO
PREVENT SHARP EDGES

APPLIED WHITE REFLECTIVE VINYL GRAPHICS
PER LOCAL CODE

COUNTERSUNK FLATHEAD SCREWS THROUGH
FACE PAINT TO MATCH FACE COLOR

(B) BACK FACE OF SIGN PAINTS ACCENT COLOR: (TBD)

(C) 2" SQUARE ALUMINUM POST PAINTS:
(TBD) ALL SURFACES; CAP TOP OF POST

DIRECT BURIAL OR PLATE MOUNT PER LOCATION
CONNDITIONS (VIF), COORDINATE WITH GC

Landscape Architect
howell & vancuren
601 S. Lewis Ave, Tulsa, OK 74104
918.592.1270 | howellvancuren.com

Architect
INTEGRATED ARCHITECTURE
P.O. Box 7806, Edmond, OK 73083
405.509.7800 | integratedarc.com

Civil Engineer
wallace
410 N. Walnut Ave. Ste 200, Oklahoma City, OK 73104
405.236.5858 | wallacesc.com

Electrical Engineer
HP ENGINEERING
205 NW 63rd Street, Oklahoma City, OK 73116
405.286.9945 | hpengineeringinc.com

Graphic Design
Hoffer Waska creative
1443 S. Norfolk Ave, Tulsa, OK 74120
281.704.9729 |

City of Norman
RUBY GRANT PARK
AMENDMENT ONE
3110 WEST FRANKLIN ROAD
NORMAN, OKLAHOMA 73072

REVISIONS:

PROFESSIONAL SEAL:
OKLAHOMA
Joe Howell
REGISTERED LANDSCAPE ARCHITECT
10
12/11/20

ISSUE DATE:
December 11, 2020

CONSTRUCTION DOCUMENTS

DRAWN BY: HW CHECKED BY: H&V

SHEET NAME:
CODE & INFORMATIONAL SIGNAGE

SHEET NUMBER:
W 8.00A

DRAWING IS NOT TO SCALE UNLESS PRINTED ON SHEET SIZE: 22"x34" (ARCH D)