60% Design Development
Westwood Family Aquatic Center

June 6/7, 2016

waters edge AQUATIC DESIGN

H&B HOSS & BROWN ENGINEERS

hfsd landscape architecture

Cover Sheet

NORMAN, OKLAHOMA
Westwood
Family Aquatic Center
2016
N
POOL LAYOUT
N
PROJECT AREA
N
PROJECT LOCATION
2400 Westport Drive
Norman, OK 73069
DATE: 06-02-16
ISSUE: DD SUBMITTAL SET
WEAD JOB #: 16-502

Project Budget – Westwood Family Aquatic Center – June 3, 2016

PROJECT ITEMS		PROPOSED LAYOUT	Alternates	layout
SITE WORK		$ 1,126,400	$ 118,600	ADDITIONAL PARKING
SITE FURNISHINGS		$ 94,000	$ -	
POOL BASIN AND DECK		$ 926,200	$ -	
POOL DECK EQUIPMENT		$ 303,000	$ 43,900	STARTING PLATFORMS
MAINTENANCE AND SAFETY EQUIPMENT		$ 26,800	$ -	
WATER FEATURES		$ 1,082,400	$ -	
SUNSHADES		$ 102,100	$ 23,500	ADDITIONAL SHADE
BATHHOUSE-CONCESSIONS		$ 1,288,100	$ -	
FILTER BUILDING		$ 423,100	$ -	
POOL CHEMICAL SYSTEMS		$ 117,800	$ -	
POOL MECHANICAL		$ 1,109,600	$ 72,000	LAP POOL HEATING
POOL FINISH		$ 73,800	$ -	
ELECTRICAL		$ 416,800	$ -	
ALLOWANCES		$ 50,000	$ -	
GENERAL CONDITIONS (Bonding, Insurance, Supervision)		$ 319,900	$ 9,000	
SUBTOTAL		$ 7,460,000	$ 267,000	
SALES TAX (see note below)	8.75%	$ 312,400	$ 11,300	
LOCATION FACTOR AND WAGE RATES	3%	$ 223,800	$ 8,000	
INFLATION FOR (year) BID	3%	$ 239,900	$ 8,600	
SUBTOTAL		PROPOSED LAYOUT $ 8,236,100	$ 294,900	
CONTRACTORS PROFIT AND OVERHEAD	15%	$ 1,235,400	$ 44,200	
BIDDING & CONSTRUCTION CONTINGENCIES	10%	$ 947,200	$ 33,900	
TOTAL OPINION OF CONSTRUCTION COST		PROPOSED LAYOUT $ 10,418,700	$ 373,000	
QUALITY CONTROL TESTING	0.5%	$ 52,100		
SOIL INVESTIGATION		$ 8,000		
TOTAL OPINION OF PROJECT COST		PROPOSED LAYOUT $ 10,478,800	$ 373,000	

Site Plan with Parking

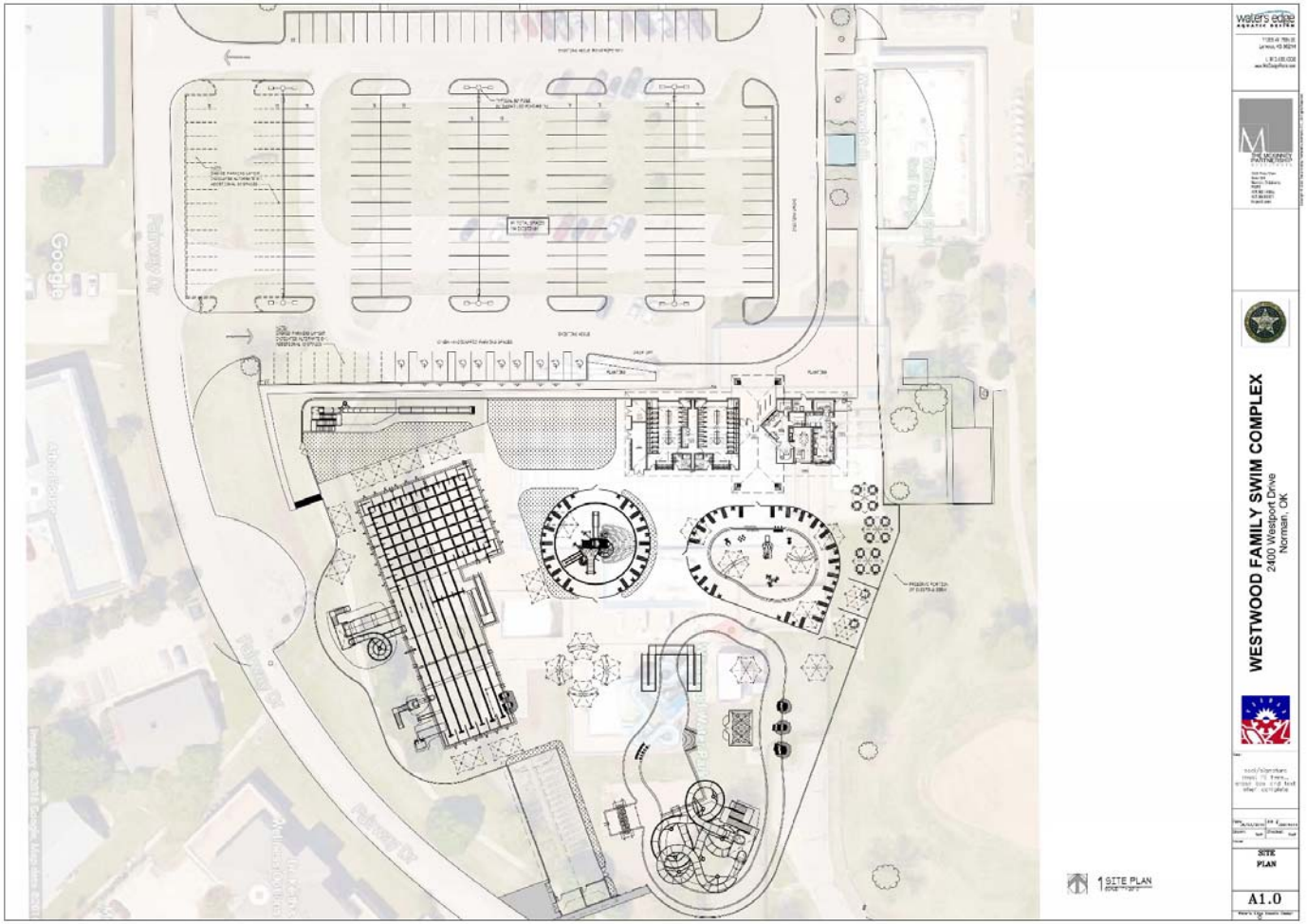

Bathhouse Front Elevation

Bathhouse Floor Plan

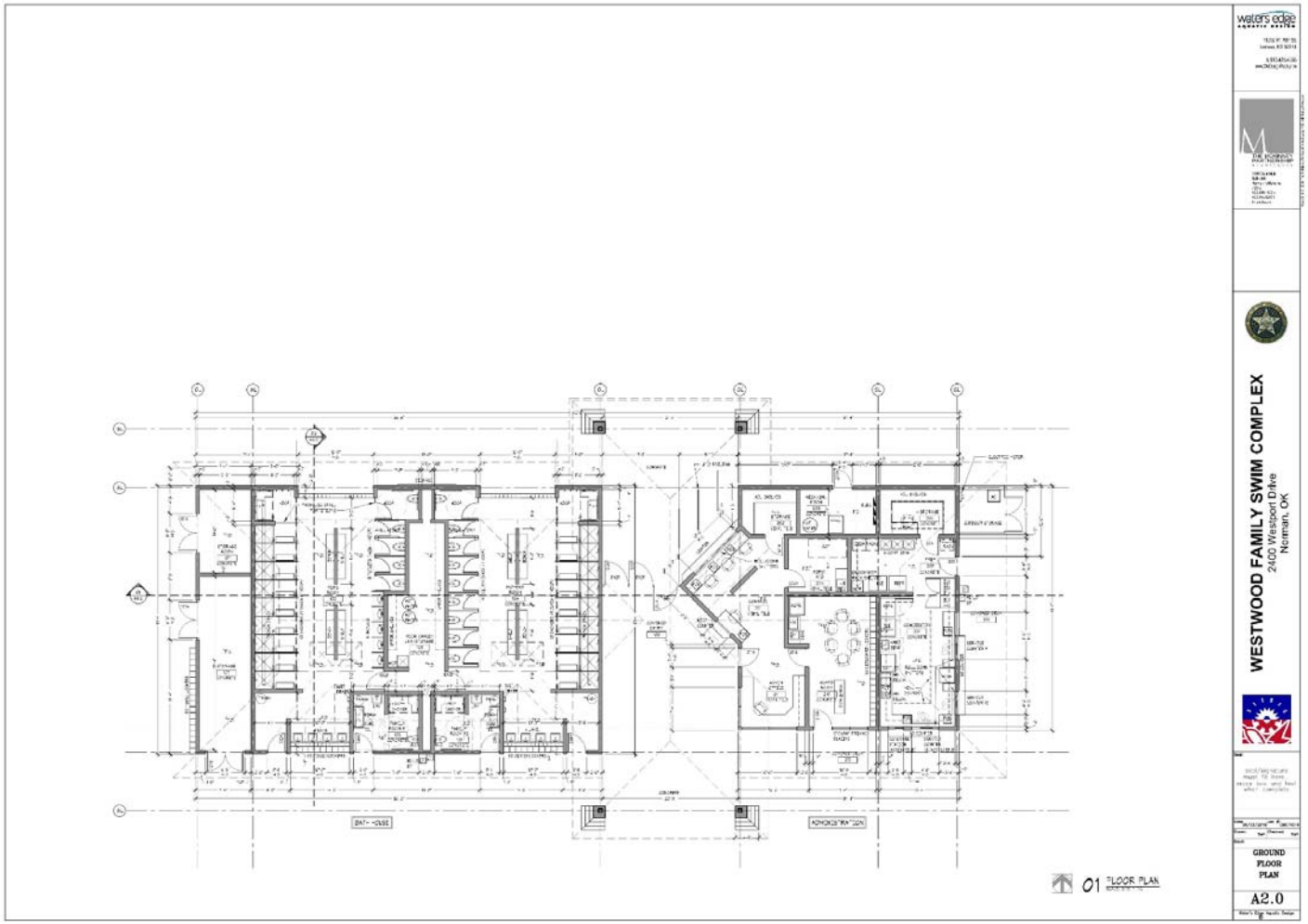

Bathhouse Elevations

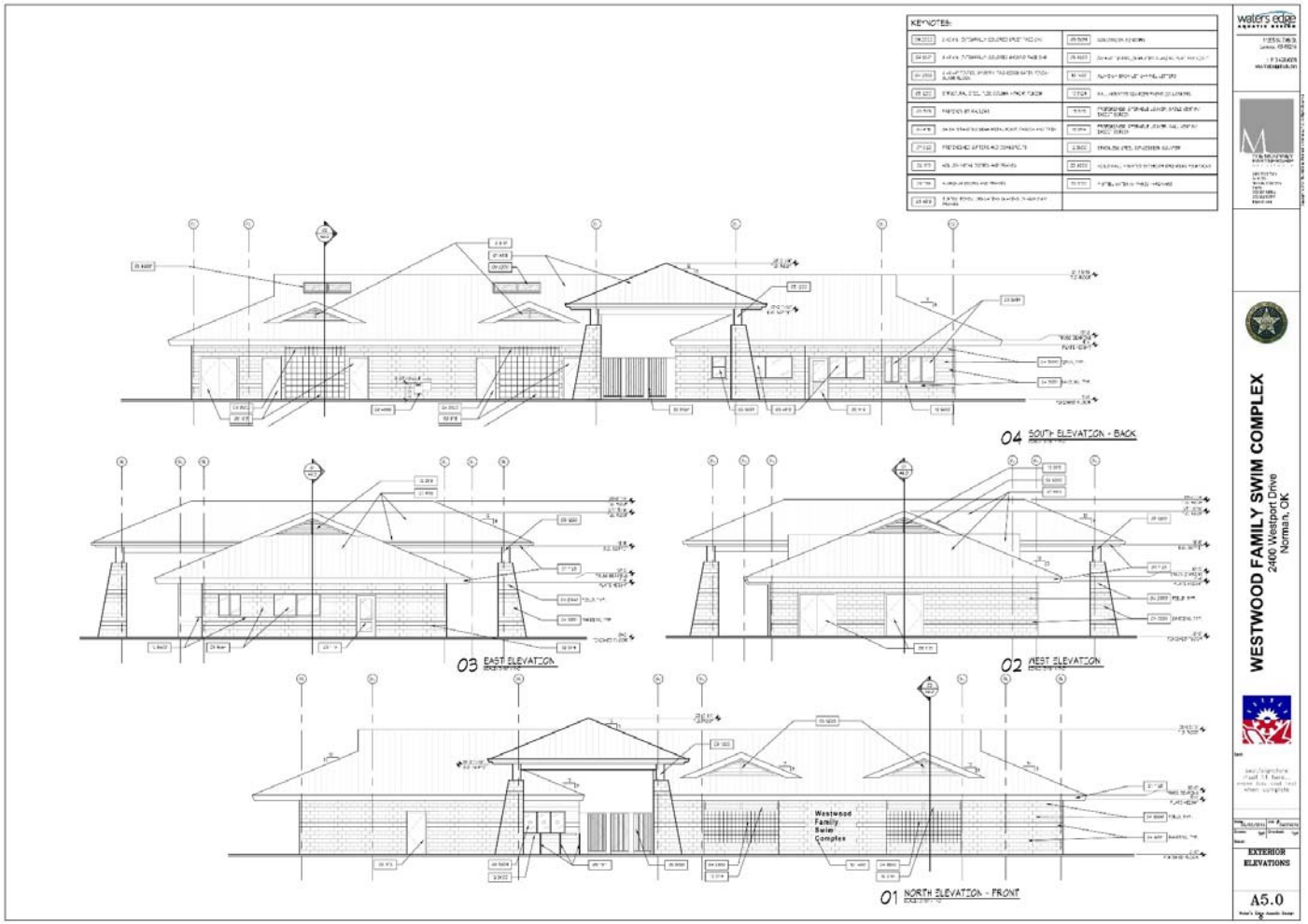

Bathhouse Elevations

6 VIEW LOOKING NORTH

5 VIEW LOOKING SOUTH

4 VIEW LOOKING N.E.

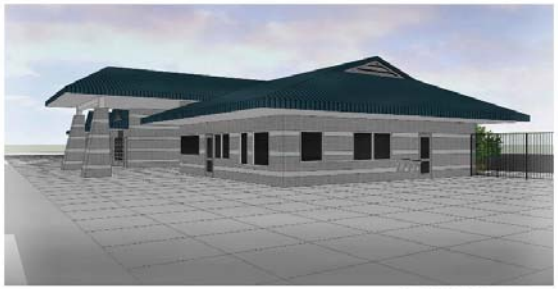

3 VIEW LOOKING N.W.

2 VIEW LOOKING S.W.

1 VIEW LOOKING S.E.

WESTWOOD FAMILY SWIM COMPLEX
2400 Westport Drive
Norman, OK

PERSPECTIVES

A10.0

Overall Pool Layout

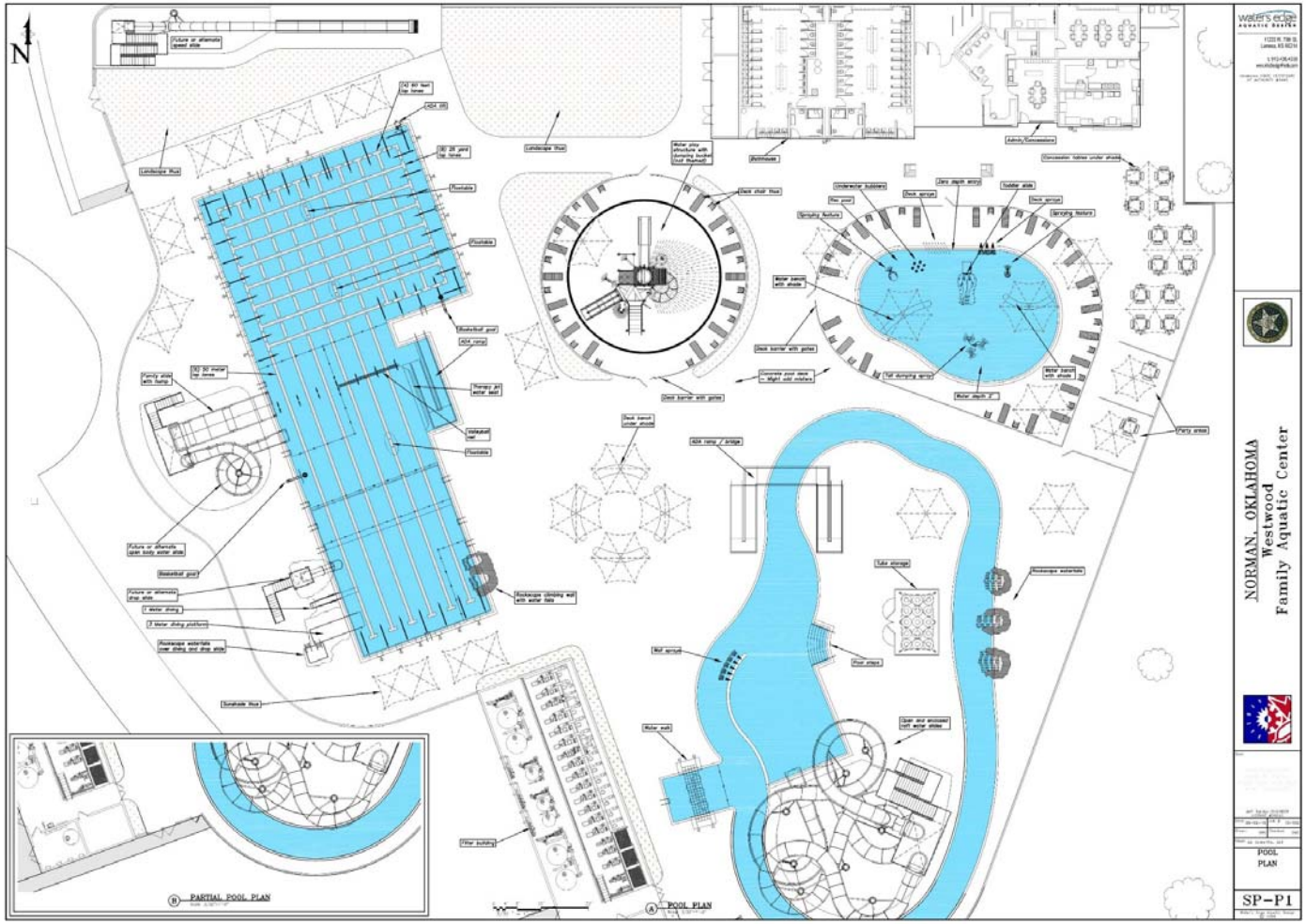

Lap Pool Layout

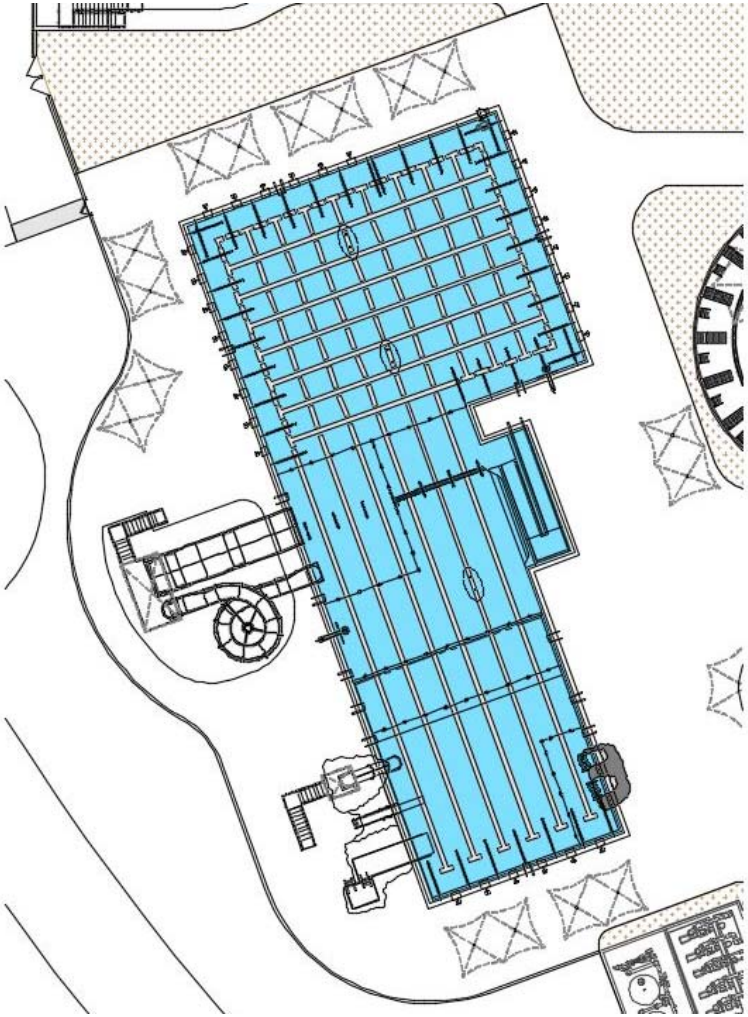

Lazy River and Slide Area Layout

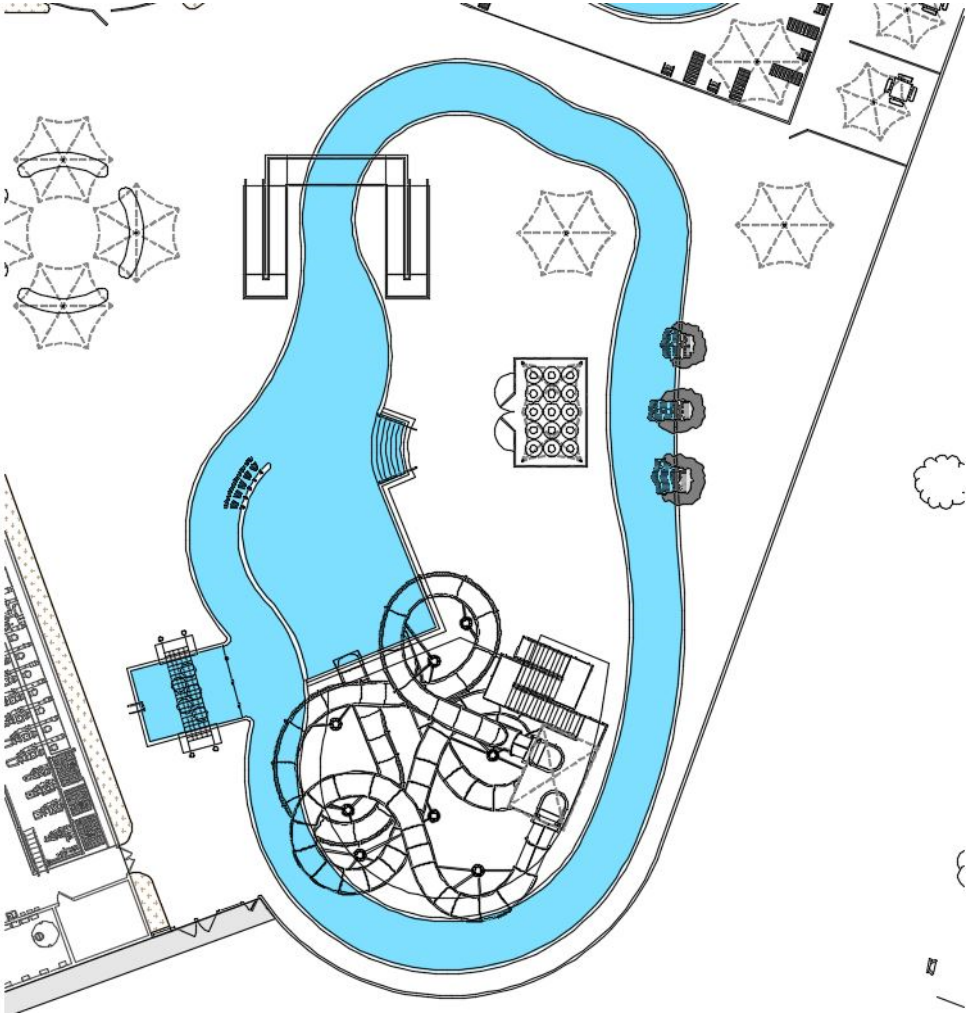

Shallow Pool and Play Structure Layout

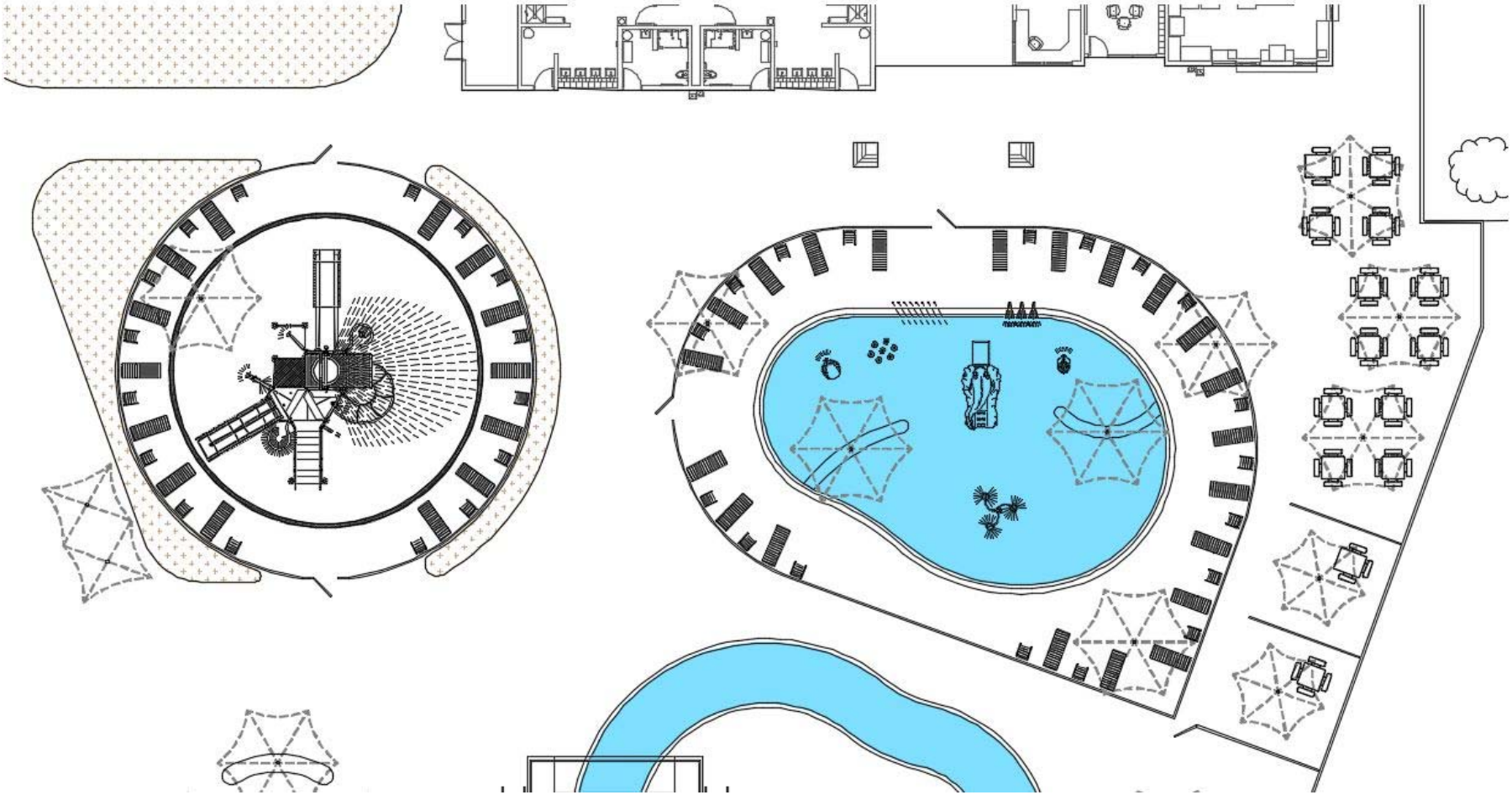

Filter Building Floor Plan

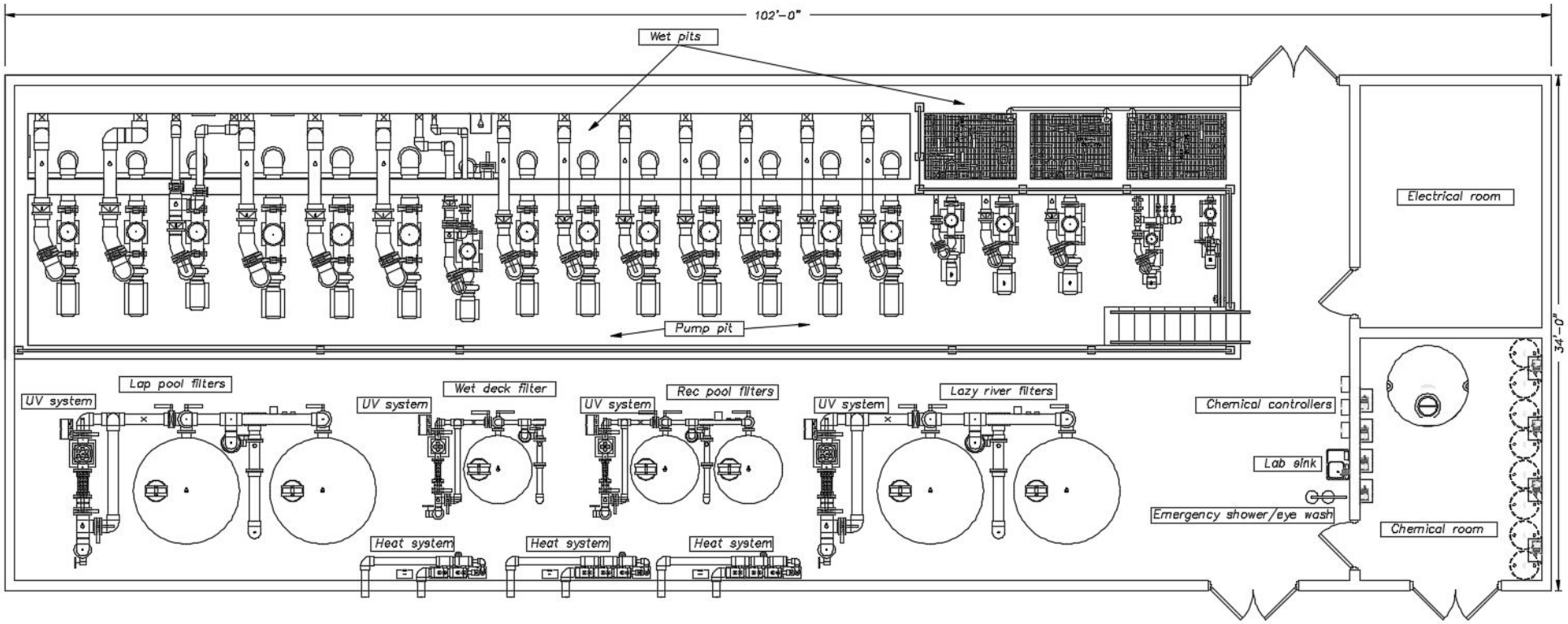

7 filters – 16 pumps now – 3 pumps future

Lazy River Rockscape Example

Proposed Lazy River Wall Sprays

Lazy River Example

Rockscape Climbing Wall Examples

Proposed ADA Ramp Bridge

Example Landscape Area with Seat Walls

Water Walk Example

Proposed Basketball Goal

Proposed Shade Structure

Proposed Tube Storage

Proposed Water Bench and Shade in Water

Proposed Large Water Slides

Proposed Family Slide and Possible Future Slide

Possible Alternate or Future Drop Slide

Proposed Play Structure

Example Therapy Jet Seat and Floatable

Proposed Volleyball

Generic Toddler Slide

Themed Toddler Slide (Option)

Example Aqua Spouts

Proposed Bubblers

Proposed Zero Depth Sprays

Vertical Play

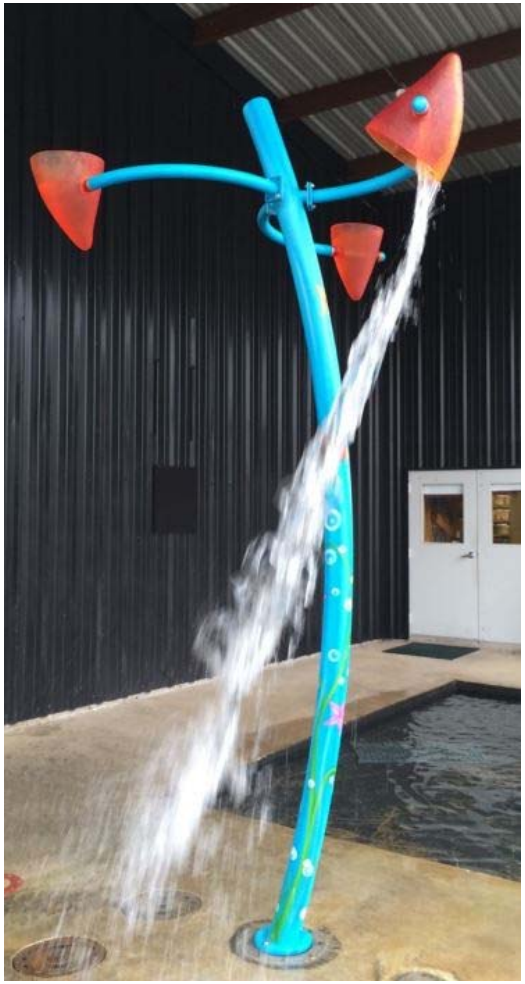

Example Filter Face Piping and UV

Example Filter Room Pumps

Sodium Hypochlorite Storage Example

Acid Feed Pumps and Storage Example

Chemical Controller Examples

Your Questions and Comments

Thank You

Norman OK Westwood Family Aquatic Center

06-03-16

Max Proposed layout - 6 @50m + 8@25 yd + 4 @20 yd	19,013	
	-	
	-	

PROJECT ITEMS	PROPOSED LAYOUT	Alternates	layout
SITE WORK	$ 1,126,400	$ 118,600	ADDITIONAL PARKING
SITE FURNISHINGS	$ 94,000	$ -	
POOL BASIN AND DECK	$ 926,200	$ -	
POOL DECK EQUIPMENT	$ 303,000	$ 43,900	STARTING PLATFORMS
MAINTENANCE AND SAFETY EQUIPMENT	$ 26,800	$ -	
WATER FEATURES	$ 1,082,400	$ -	
SUNSHADES	$ 102,100	$ 23,500	ADDITIONAL SHADE
BATHHOUSE-CONCESSIONS	$ 1,288,100	$ -	
FILTER BUILDING	$ 423,100	$ -	
POOL CHEMICAL SYSTEMS	$ 117,800	$ -	
POOL MECHANICAL	$ 1,109,600	$ 72,000	LAP POOL HEATING
POOL FINISH	$ 73,800	$ -	
ELECTRICAL	$ 416,800	$ -	
ALLOWANCES	$ 50,000	$ -	
GENERAL CONDITIONS (Bonding, Insurance, Supervision)	$ 319,900	$ 9,000	
SUBTOTAL	$ 7,460,000	$ 267,000	
SALES TAX (see note below) 8.75%	$ 312,400	$ 11,300	
LOCATION FACTOR AND WAGE RATES 3%	$ 223,800	$ 8,000	
INFLATION FOR (year) BID 3%	$ 239,900	$ 8,600	
SUBTOTAL	PROPOSED LAYOUT $ 8,236,100	$ 294,900	
CONTRACTORS PROFIT AND OVERHEAD 15%	$ 1,235,400	$ 44,200	
BIDDING & CONSTRUCTION CONTINGENCIES 10%	$ 947,200	$ 33,900	
TOTAL OPINION OF CONSTRUCTION COST	PROPOSED LAYOUT $ 10,418,700	$ 373,000	
QUALITY CONTROL TESTING 0.5%	$ 52,100		
SOIL INVESTIGATION	$ 8,000		
TOTAL OPINION OF PROJECT COST	PROPOSED LAYOUT $ 10,478,800	$ 373,000	

THE MCKINNEY PARTNERSHIP
architects

3 June 2016

Westwood Family Aquatic Center

Site, Bath House and Filter Building

DESIGN DEVELOPMENT NARRATIVE

EXISTING CONDITIONS

- The site consists of the existing Westwood Pool complex constructed in the late 1960's. The pool building is connected to the golf clubhouse with a covered walkway and a confusing parking lot containing 94 spaces. The parking lot drains to an existing underground storm system along the east curb line.

- Site demolition consists of removing all of the existing pool, deck, building, structures, fencing and south parking lot.

NEW SITE CONSTRUCTION

- The site grading will typically follow the existing topography with gentle grades from the west side of the parking to the east side. Existing curb inlets are anticipated to transfer all new site drainage to the pond east of the golf cart barn.

- The new parking will provide 191 standard parking spots including the code-required handicap parking spaces and are planned to replace the 94 existing spaces within the south half of the Westwood parking lot. Space has been set aside for an additional forty (40) spaces when required. The new parking will be well illuminated with 25' poles with LED multi-fixture lights compliant with City ordinances. The handicap spaces to be provided on the north side of the building will be designed with no concrete curbs (Universal Design) to better facilitate access. Concrete parking blocks/bumpers will be utilized as wheel stops for the handicap parking spaces. The proposed parking lot will have two (2) driveways that connect to Fairway Drive to the west. All new parking and drives will be constructed as required per the geotechnical report.

3600 West Main
Suite 200
Norman, Oklahoma
73072
405.360.1400 p
405.364.8287 f
tmparch.com

- Parking areas shall consist of concrete curb and gutter and asphalt concrete. Reinforced concrete shall be utilized in all drive approaches, dumpster pads and within 10 feet of all grated street inlets.

- Sidewalks will be constructed of 5 inch reinforced concrete. Handicap accessible sidewalk ramps with the standard truncated dome warning pads will be installed at all pedestrian crossings as required. Standard Americans with Disabilities Act (ADA) guidelines for sidewalk grades and cross slopes will be strictly adhered too with the proposed design.

- The drainage for the site consists of overland flow to existing storm sewer structures. Storm sewer lines will consist of high density poly ethylene (HDPE) pipe and reinforced concrete pipe (RCP) connecting to existing storm sewer pipes or box culverts. Proposed storm sewer structures will consist of standard median drains, cast iron curb inlets, and grated street inlets. The storm sewer pipes will also be designed to transport runoff from the roof drains. Special details for the underground connections of the roof drains to the storm sewer pipes will be included with the final design.

NEW BUILDING CONSTRUCTION

- Westwood Family Aquatic Center (WFAC) shall be located on the existing Westwood Pool site immediately south of the Westwood Park parking area off of 24th Avenue NW in Norman, Oklahoma.

- The facility will contain approximately 18,000 square feet of water surface within a variety of pools and water features including a 50 meter x 25 yard lap pool, numerous slide features, a lazy river, sprays and shallow water pools.

- The complex will include a new 4,684 SF bath house/concessions/ administration building with support functions, lockers, showers and storage. Also included is a new 3,468 SF filter building with pumps, filters and chemical storage. Space will be included for future pumps as attractions are added.

- The Project shall be 100% handicap accessible including but not limited to signage, parking, path of access into the swim complex, shower facilities and swim facilities.

- The project will be landscaped and irrigated with an automated / zoned sprinkler system. The final design will meet or exceed City Ordinance. A plan for sleeves between all islands and planting areas will be coordinated with in the final Construction Documents.

- A dumpster shall be fully screened by masonry to match the buildings.

- A central wayfinding sign for the entire Westwood complex is proposed to include a component of public art as required as part of Norman Forward. Identifying signage shall also be located on the building along with wayfinding signage throughout WFAC.

- Bicycle racks and site amenities including aesthetic seating and waste cans shall be provided outside and inside the facility.

BUILDING EXTERIORS

- Low-maintenance integral-color split-face and ground-face concrete masonry units (CMU) with colored mortar shall be used for the exterior walls of all buildings. Standard CMU with radius corners shall be used on the interior

- 1” insulated and tinted “Low-E” glass within an aluminum glazing system shall be used for all vision windows. Obscured 8" x 8” glass block shall be used in portions of the bath house walls to allow natural light, insulation and security.

- The roof shall be a Kynar (or equal) finish standing lock-seam metal over a nailable fire retardant deck over 2” of rigid insulation over a metal deck spanning engineered light gauge metal trusses. Gutters will be provided where required with downspouts that connect to underground PVC piping to the face of curbs or storm system. Kynar finished fixed louvers with internal screens shall allow ventilation through architectural roof dormers.

- A composite wood screen enclosure near the concession deck shall contain the mechanical unit and miscellaneous exterior storage. 7’ tall steel entry gates shall be for secure entry and out-swinging for exit / emergency.

BATH HOUSE

- Toilet / shower facilities per Oklahoma State Department of Health (OSDH) code shall receive wall hung porcelain fixtures, push-button flush valves and enclosed shower valves with overhead service. Floor-mounted shower and toilet stalls shall be molded High Density Polyethylene (HDPE) Plastic for durability and cleaning. Integral benches and curtains provide privacy and convenience to each patron. Floor drains and a continuous trench drain beneath the showers will quickly drain the floor areas.

- A central plumbing / janitor’s chase shall provide ease of access for maintenance and repair of the wall fixtures and twin natural gas water heaters.

- A central exhaust system shall serve the toilets as well as exhaust the overall shower room by pulling air thru sidewall vents above the north glass block window wall and out the south gable vents

- Interior ceilings shall receive cement fiberboard panels with ¼” spacing. A vaulted section of the ceiling with two 4’x4’ skylights in each shower room shall receive ¾” composite wood, run across the slope.

- Interior CMU walls shall receive epoxy block filler and epoxy paint to 7’-4” above the floor. All other interior CMU surfaces shall receive primer and paint.

- Floor finish shall be uniform broom finished concrete.

- Exterior patron lockers shall be 12" x 12” x 5 high, non-metallic and mounted on a concrete curb above any standing water.

ADMINISTRATION - CONCESSIONS

- Mechanical system shall be a conventional split-system heat pump within a central M/E closet.
- Fire Sprinklers are not required for any of the buildings.
- Interior spaces shall receive radius corner CMU with paint finish. Concession sales and prep areas shall receive Fiberglass Reinforced Plastic (FRP) panels to 48” height.
- Ceilings shall be suspended acoustical tile with 6” batt insulation.
- Millwork shall be plastic laminate on water resistant substrate. Exterior counters and portions of the interior counters shall be stainless steel
- Flooring shall be vinyl in the offices and concrete elsewhere.
- Lockers shall be half-high and shared between life guards.

STRUCTURAL DATA

CODES

- 2015 International Building Code.
- ASCE 7-10, Minimum Design Loads for Buildings and Other Structures (American Society of Civil Engineers)
- AISC Specification for Structural Steel Buildings – Allowable Stress Design, 14th Edition (American Institute of Steel Construction)
- ACI 318-14, Building Code Requirements for Structural Concrete (American Concrete Institute)
- ACI 530-13, Building Code Requirements and Specifications for Masonry Structures
- AISI, Specifications of the Design of Cold Formed Steel Structural Members (American Iron and Steel Institute)
- AWS D1.1, Structural Welding Code by The American Welding Society

PROJECT DESCRIPTION

- The single story Bath House is 4,684 SF and constructed of load bearing concrete masonry unit walls with cold-formed steel roof trusses. The roof trusses are spaced at 5’-0” o.c. maximum with 1 1/2" x 20 gauge type-B steel roof deck.
- The single story Filter Building is approximately 3,468 SF and constructed of load bearing concrete masonry unit walls with cold-formed steel roof trusses. The roof trusses are spaced at 5'-0" o.c. maximum with 1 1/2" x 20 gauge type-B steel roof deck.
- A geotechnical report is not available at this time for the building site. The foundation will likely be constructed of shallow continuous and spread footings. The footings will be constructed of cast-in-place concrete having a minimum 28-day compressive strength of 3,000 psi and reinforcing bars having a minimum yield strength of Fy = 60,000 psi.
- The floor will be constructed of a 4 inch thick cast-in-place concrete slab-on-grade with reinforcing bars equally spaced in each direction. The subgrade will be properly compacted low volume change fill in accordance with the geotechnical report. Four inches of granular fill will be placed over the low volume change fill. A vapor barrier will be installed between the granular fill and the concrete slab.
- The load bearing CMU shear walls will support the structural steel roof framing. The exterior walls will be reinforced with vertical bars in grouted cells spaced at 24 inches on center. A continuous bond beam will be located along the tops of the walls with steel embed plates at each truss bearing location. Intermediate continuous bond beams will be spaced at 4 feet on center. Bond beams will have two continuous bars.

PROJECT DESIGN LOADS

- Roof live loads 20 psf
- Wind loads Per ASCE 7-10
  - V (Basic Wind Speed) = 115 mph
  - I (Wind Importance Factor) = 1.00
  - Wind Exposure Category = C
- Seismic loads Per ASCE 7-10
  - Seismic Risk Category II
  - Site Class D
  - Seismic acceleration coefficient SDS = 0.286
  - Seismic acceleration coefficient SD1 = 0.126
  - Seismic Design Category B
- The lateral load resisting system for the addition will be the load bearing CMU shear walls

MATERIAL STRESSES

- Structural Steel
- Structural Shapes (hot-rolled wide-flange shapes) ASTM A992 (American Society for Testing and Materials)
- Structural Steel Plates, Channels and Angles ASTM A36
- Structural Steel Tubes ASTM A500, Grade B
- Structural Steel Pipes ASTM A53, Grade B
- Structural Bolts ASTM A325
- Anchor and Erection Bolts ASTM A307
- Cold-formed steel trusses: ANSI/AISI COFS/S214-07 (American National Standards Institute Committee on Framing Standards)

CONCRETE

- Footings and slabs-on-grade: Standard minimum 28 day compressive strength shall be 3,000 psi.
- Concrete Reinforcing Steel ASTM A615, Grade 60
- Concrete Masonry Units (CMU) f'm = 1,500 psi minimum

waters edge
AQUATIC DESIGN

11205 W. 79th St.
Lenexa, KS 66214

t. 913.438.4338
www.WeDesignPools.com

Design Development Narrative

Westwood Family Aquatic Center

Norman, Oklahoma

Water's Edge Aquatic Design

June 3, 2016

A new outdoor pool facility is planned to replace the Westwood Pool. The same pool location will be used, along with a slight shift in pool and building placement. The following text provides a narrative of the planned facilities and features.

EXISTING POOL DEMOLITION

Complete demolition of the existing facilities is planned. Transite (asbestos cement) pipe was used in the pool piping and must carefully be removed. A demolition contract will precede the new pool bid.

PROPOSED POOL SITE

The existing pool site will be reused for the new pool facilities. Access will continue to be from the North. A portion of the current parking will be reused. Additional parking will be provided in the existing grass area north of the pool parking. The golf course area will be protected and remain in use throughout construction, as will the tennis area.

PROJECT BUDGET

A construction budget of $10.5 million is available for the aquatic facility project. This includes applicable sales tax, and contingencies for construction and inflation. A cost summary is attached.

KEY FACILITIES

The key aquatic facilities include a lap pool, a lazy river/plunge pool, a shallow pool and a wet deck play area. Support facilities include a bathhouse, additional parking, and a filter building.

KEY FEATURES

The community goals for this aquatic facility include providing diverse features that appeal to all ages and abilities, ranging from open play to lessons to athletic training and competition. In an effort to be cost efficient and yet meet the community goals, the design features focus on multi-use equipment and systems. This means that some preferences are partially modified to provide the best possible project while meeting the budget goal.

The largest feature is the lap pool, with six 50-meter swimming lanes and eight 25-yard swimming lanes. A summary of features for the lap pool follows:

… Water surface area of 9,588 square feet
… Volume of 440,530 gallons
… Recirculation rate of 1,600 gpm
… Water depths from 13.5 feet to 3.5 feet
… One-meter springboard and three-meter diving platform in rockscape
… Water depth of 13 feet for starting platform training
… Water depth of 4 feet for turns and entries
… Surrounded by overflow gutter system
… Rockscape climbing wall at the diving area
… ADA ramp entry to lap pool at water depth of 3.5 feet
… Family slide into water depth of 3.5 feet
… Basketball goal into water depth of 3.5 feet
… Underwater seat with therapy jets
… Volleyball net and anchors

Another large feature is the lazy river, which is combined with the water slide plunge pool. A summary of the features for this pool follows:

… Lazy river length of 445 feet
… Water surface area of 6,635 square feet (river and plunge area)
… Volume of 167,380 gallons
… Recirculation rate of 1,100 gpm
… Water depths of 3.0 feet to 3.5 feet
… Periodic gutter overflows on the river and continuous gutter for the plunge pool
… Stair entry with ADA transfer seat and handrail
… River width of 10 feet
… Sprays within river
… ADA ramp over river to island
… Rockscape with waterfalls
… Plunge area for two water slides
… Water walk alongside river

The shallow recreation pool is separate from the lazy river. Key features follow:

… Water surface area of 2,317 square feet

… Volume of 21,660 gallons
… Recirculation rate of 400 gpm
… Zero depth entry area
… Water depths of 0 ft to 2.5 feet
… Spray features and bubblers
… Play features
… Tall feature with dumping buckets
… Seats in pool with shade structures
… Toddler slide

A wet deck area is planned for an interactive play structure. Key features follow:

… No depth of standing water
… Water is recirculated and treated
… Play feature with several features (small slides with runouts, raised platforms, dumping bucket, sprays, and climbing features
… Surrounded by overflow gutter system
… Main drain also recirculates water

POOL STRUCTURE

All pool structures will be built with formed reinforced concrete (4,000 psi, air entrained, water reducer, no chert and no lignite). The pool walls and floors will be coated with three coats of epoxy paint. Non-slip surfaces will be provided on the gutter top surface, all stair treads and the floors to a depth of 2.5 feet.

WATER TREATMENT

Maintaining clean and clear pool water is critical to the health and safety of patrons and staff. This does not happen just during open hours, but must be maintained 24 hours a day and each day during the summer season. The large mass volume of pool water is slow to change, but if unbalanced, it is difficult to correct without draining and refilling the pool or pools. Frequent testing and constant observation is needed for safe operation.

The treatment systems and equipment are selected and sized to help the operator maintain your pools in good condition. A summary of the treatment facilities follows:

… Filters will be vertical pressure sand type, sized with surface loading rates of less than 12 gpm/square foot of filter area.
… Pool volume turnover rates will meet or exceed those required by the Oklahoma State Department of Health standards.
… The recirculation method is to return treated water to the pool floor or low walls. Overflow water will primarily flow over the perimeter gutters with lesser flow down through the main drains.

… UV (ultraviolet light) treatment will be used to oxidize chloramines and provide pathogen protection against cryptosporidium and giardia (protozoan cysts difficult to treat with chlorine).
… Disinfection with sodium hypochlorite (bleach) will happen with bulk liquid storage and feed pumps.
… Muriatic acid will provide pH control, also using bulk storage and feed pumps.
… Baking soda and calcium carbonate may be required for water balance control. These chemicals will be manually fed into the surge tanks and will be stored dry in bags in the filter room.
… Chemical controllers for each pool system will help monitor the chemical conditions and assist the operator in maintaining proper water quality.

PIPING

As you can imagine, pool piping will be extensive and will be mostly under the deck or under the pool floors. This makes pipe repairs challenging to locate and to repair. Many pool designers use Schedule 40 PVC piping, but we recommend Schedule 80 PVC piping, a significantly stronger pipe.

Deck drain piping will also be PVC, but will have lesser wall thickness because of lower pressure demands.

PUMPS

Nineteen pool pumps are planned for filter recirculation, water slides, river motive flow, play structure, spray features, and rockscape water falls. All pumps will be located in the filter building and will be set below grade to provide flooded suction, which eliminates the need to prime the pumps.

The pumps will be end suction centrifugal type with cast iron volutes and bronze impellers. They will have a maximum rpm of 1800. These pumps have readily maintained bearings and seals. The impellers can be replaced if needed in the future. Variable frequency drives will be provided for each of the main pumps. Suction and discharge pressure gages will help monitor pump performance. Flow meters on all pump discharge piping will also help the operator maintain the pools.

GUTTER SYSTEM

A formed concrete gutter will surround the lap pool, the shallow pool, the wet deck and the plunge pool. The lazy river will use periodic wall skimmers. The gutters and wall skimmers will be covered with PVC grating secured in place, but removable if needed. The gutters will be constructed level to provide uniform skimming all around the pools.

MAIN DRAINS

The pools will be designed to be drained during the off season so main drains will allow removal of the pool water. VGB compliant drain covers will be provided to prevent suction entrapment, hair entanglement and finger entrapment. The maximum water velocity through the drains will be less than 1.5 feet per second, a safe velocity for all patrons.

Main drains will be located in all pools, some with multiple drains.

UNDERDRAINS

We design our pools to be empty during the off season. This avoids a drowning potential for the nine months the pool is closed. It also reduces the cleanup efforts in the spring. To accomplish this, the pools must be protected from hydrostatic uplift while they are empty. This condition can occur when a saturated groundwater condition and an empty pool coincide. Either a relief valve must allow water to enter the empty pool or the groundwater must be removed.

Relief valves are prone to leaking, so our design removes the groundwater by using an underdrain system. A clean granular fill is placed under and around the pools. A perforated pipe system under the pools is wrapped with filter fabric to keep out soil and debris. Groundwater enters the piping and flows to a manhole for disposal.

SUBGRADE

Soil borings are underway and geotechnical testing is being performed for the pool site. This information will tell us how the subgrade must be constructed to protect the pools from expansion and settlement.

The gradation and type of backfill material will be identified by the geotechnical report.

POOL DECK

A reinforced concrete deck will surround each pool. The deck must be sloped away from the pools. Periodic deck drains will be use to remove rainwater from the site. A non-slip texture must be provided in the deck areas. All deck slopes will meet ADA accessible requirements (1:50 or 2%).

LANDSCAPING

This is yet to be determined.

FENCING

Fencing will be six foot tall black PVC coated chain link fencing with suitable gates.

LIGHTING

Overhead pool lighting is planned. Speakers will also be attached to the light poles.

HEATING

Pool water heating is currently budgeted as an alternate for the lap pool. Space is programmed in the filter building for future addition of heating all pools.

SHADE STRUCTURES

Multiple shade structures are planned all around the pool site. The shade skeleton will be powder coated steel and the fabric will be suitable for the wind and sun conditions.

NORMAN, OKLAHOMA

Westwood Family Aquatic Center

2016

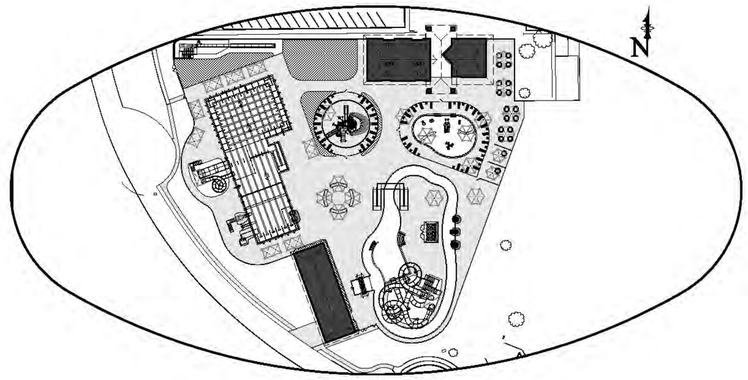

POOL LAYOUT

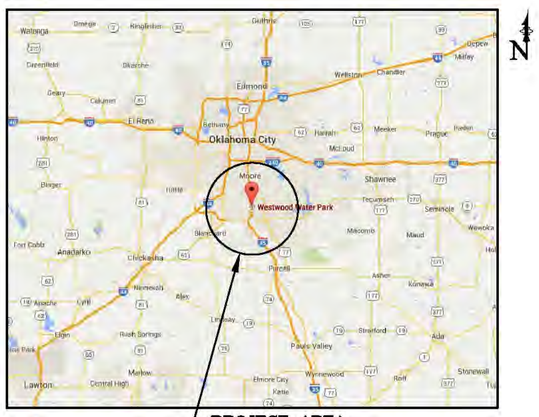

PROJECT AREA

PROJECT LOCATION
2400 Westport Drive
Norman, OK 73069

AQUATICS
Water's Edge Aquatic Design
11205 West 79th Street
Lenexa, KS 66214
Tel (913) 438-4338
www.WeDesignPools.com

SITE-CIVIL
Cabbiness Engineering
333 12th Avenue SE, Suite 200
Norman, OK 73071
Tel (405) 310-5435
www.CabbinessEngineering.com

LANDSCAPE
HFSD Landscape Architecture
3100 NW 149th Street
Oklahoma City, OK 73134
Tel (405) 752-8018
www.HFSDInc.com

ARCHITECT
TMP Architects
3500 West Main Street, Suite 200
Norman, OK 73072
Tel (405) 360-1400
www.TMPArch.com

MECHANICAL-ELECTRICAL-PLUMBING
Hoss & Brown Engineers, Inc.
11205 West 79th Street
Lenexa, KS 66214
Tel (913) 362-8090
www.H-BE.com

DATE: 06-03-16	ISSUE: DD SUBMITTAL SET	WEAD JOB #: 16-502

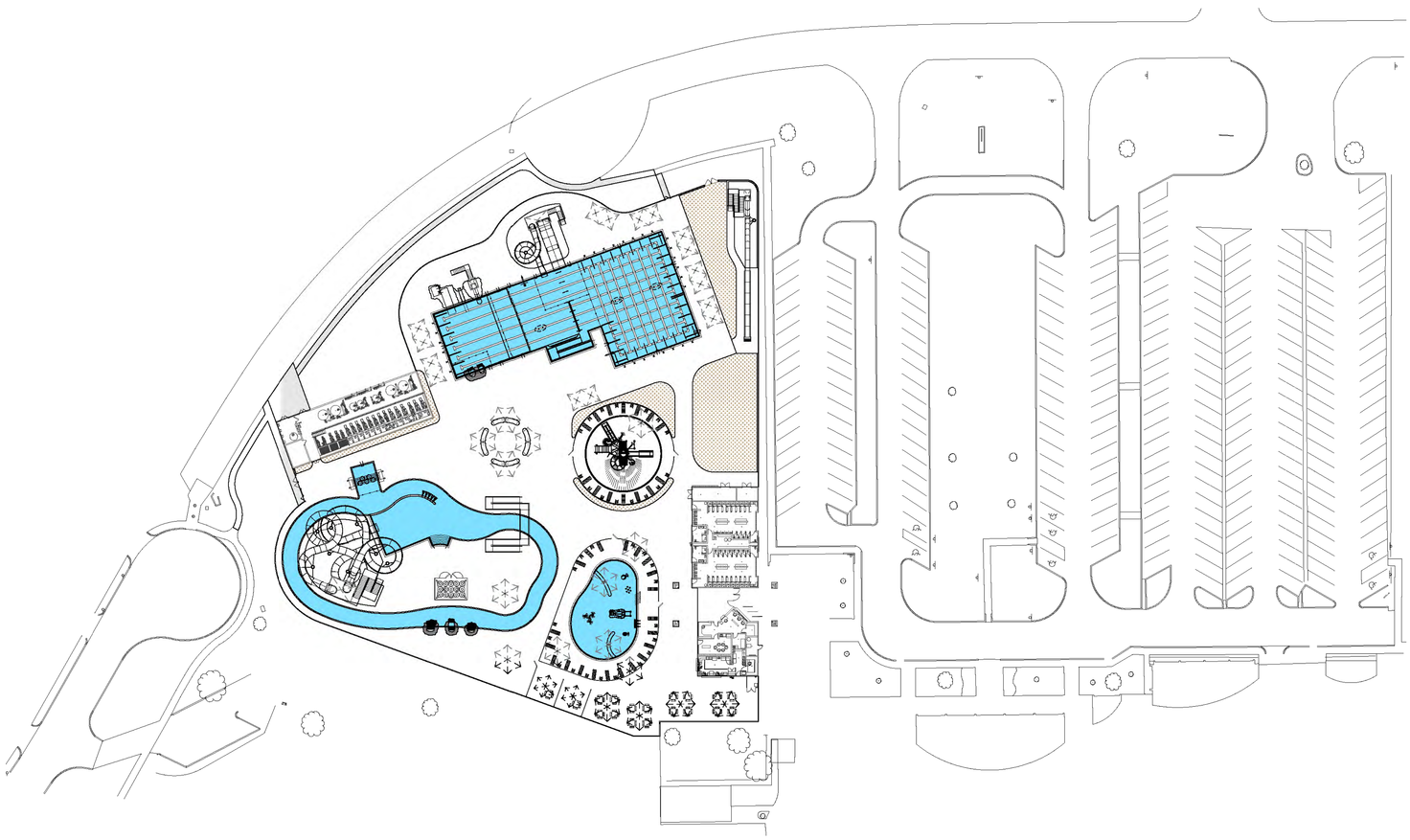

A POOL SITE PLAN
Scale: 1"=40'

0 20' 40' 80' 120'
1" = 40'-0"

NORMAN, OKLAHOMA
Westwood
Family Aquatic Center

waters edge AQUATIC DESIGN
11205 W. 79th St.
Lenexa, KS 66214
t. 913.438.4338
www.WaterEdgeProducts.com
Oklahoma STATE CERTIFICATE OF AUTHORITY #3853

Jeff Beeler-ENGINEER
LICENSE #20798
Date: 06-03-16 Job #: 16-502
Drawn: SBS Checked: DRB
Issue: DD SUBMITTAL SET

POOL SITE PLAN

SP-C1

Water's Edge Aquatic Design © 2016

SUBGRADE LIMITS SCHEDULE

Structure		Reference Detail	Minimum Thickness Below Structure: Structural Fill d_1	Minimum Thickness Below Structure: Granular Fill d_2	Minimum Horizontal Distance h_1	Comments
Pool Structures	5'-0" and greater water depth	A	–	–	–	–
	Less than 5'-0" water depth	B	–	–	–	–
Pits & Manholes	Remote valve or pump pit	C	–	–	–	–
	Surge pit	C	–	–	–	–
	Backwash pit	C	–	–	–	–
	Recirculation pump pit	C	–	–	–	–
	Manhole	C	–	–	–	–
Miscellaneous Structures	Water slide foundations	D	see comments	see comments	see comments	As req'd by mfr.
	Sunshade footings	D	see comments	see comments	see comments	As req'd by mfr.
Slabs	Pool deck slab	E	–	–	n/a	–
	Sidewalk	E	–	–	n/a	–
	Structural slab	E	–	–	n/a	–
	Floor slab – Other buildings	E	–	–	n/a	Ref. Arch. sheets for subgrade requirements
Parking Areas & Drives	Granular surface	F	–	–	n/a	–
	Asphalt surface	F	–	–	n/a	–
	Concrete surface	F	–	–	n/a	–
Retaining Walls	Retaining Walls	G	–	–	–	–
Building Foundations	Buildings	H	–	–	–	Ref. Arch. sheets for subgrade requirements
	Other buildings	H	–	–	–	–

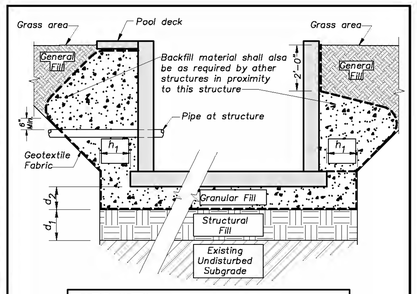

DETAIL NOTES:
1. Reference "SUBGRADE LIMITS SCHEDULE" and "GENERAL SUBGRADE NOTES" for additional information.

SUBGRADE LIMITS – PITS & MANHOLES
(C) N.T.S.

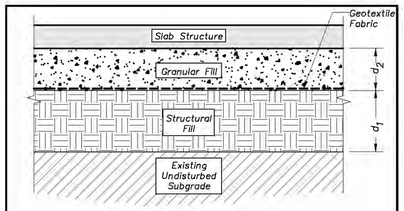

DETAIL NOTES:
1. Reference "SUBGRADE LIMITS SCHEDULE" and "GENERAL SUBGRADE NOTES" for additional information.
2. This detail applies only to the following structures: pool deck slabs, sidewalks, structural slabs, and filter building floor slabs.
3. For subgrade beneath slabs but in proximity to deeper structures or excavations reference the Subgrade Limits detail for the pertinent structure.
4. Minimum horizontal limits of subgrade can be limited to the extent of the structure unless otherwise noted.

SUBGRADE LIMITS – SLABS
(E) N.T.S.

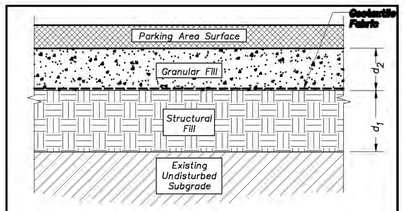

DETAIL NOTES:
1. Reference "SUBGRADE LIMITS SCHEDULE" and "GENERAL SUBGRADE NOTES" for additional information.
2. This detail applies only to the following parking area surfaces: granular surface, asphalt surface and concrete surface including concrete curb and gutter.
3. Horizontal limits of subgrade shall be limited to the extent of the parking area surface unless otherwise noted on another detail.

SUBGRADE LIMITS – PARKING AREAS & DRIVES
(F) N.T.S.

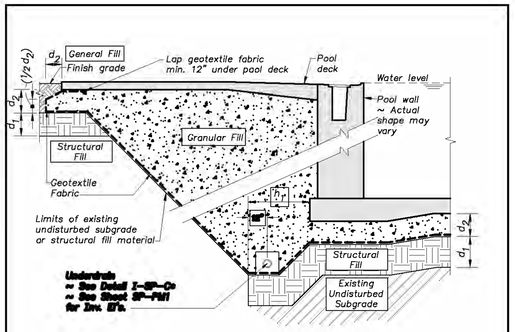

DETAIL NOTES:
1. Reference "SUBGRADE LIMITS SCHEDULE" and "GENERAL SUBGRADE NOTES" for additional information.

SUBGRADE LIMITS – POOL STRUCTURES – 5'-0" AND GREATER WATER DEPTH
(A) N.T.S.

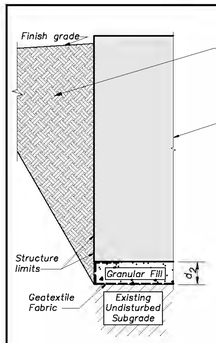

DETAIL NOTES:
1. Reference "SUBGRADE LIMITS SCHEDULE" and "GENERAL SUBGRADE NOTES" for additional information.
2. This detail applies only to the following structures: water slide foundations, sunshade footings
3. An excavation extending beyond the structure may not be required (such as a drilled earth formed foundation), backfill material requirements remain as noted.
4. Horizontal limits of subgrade beneath the structure shall be limited to the extent of the structure unless otherwise noted on another detail, schedule or required by manufacturer.

SUBGRADE LIMITS – MISCELLANEOUS STRUCTURES
(D) N.T.S.

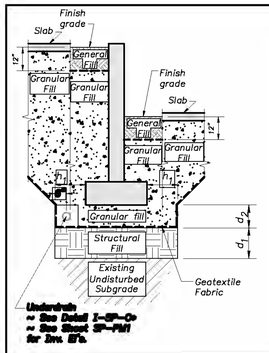

DETAIL NOTES:
1. Reference "SUBGRADE LIMITS SCHEDULE" and "GENERAL SUBGRADE NOTES" for additional information.

SUBGRADE LIMITS – RETAINING WALLS
(G) N.T.S.

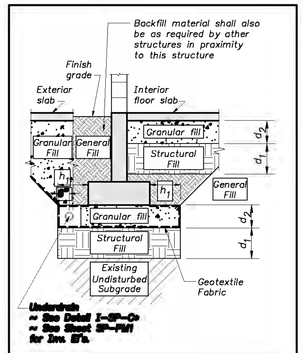

DETAIL NOTES:
1. Reference "SUBGRADE LIMITS SCHEDULE" and "GENERAL SUBGRADE NOTES" for additional information.

SUBGRADE LIMITS – BUILDING FOUNDATIONS
(H) N.T.S.

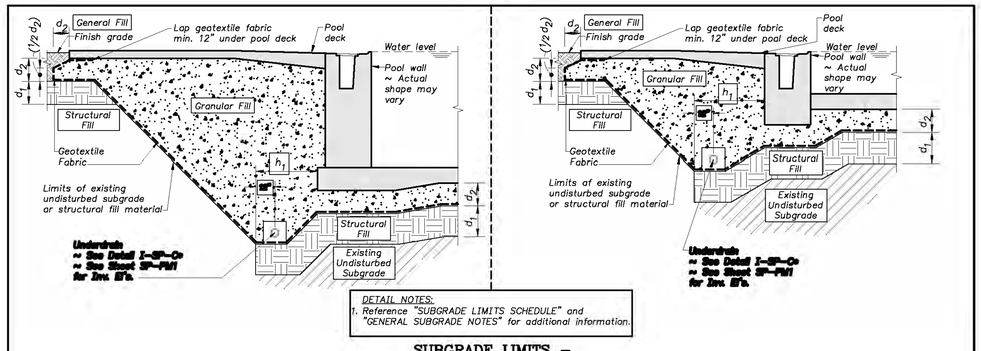

DETAIL NOTES:
1. Reference "SUBGRADE LIMITS SCHEDULE" and "GENERAL SUBGRADE NOTES" for additional information.

SUBGRADE LIMITS – POOL STRUCTURES – LESS THAN 5'-0" WATER DEPTH
(B) N.T.S.

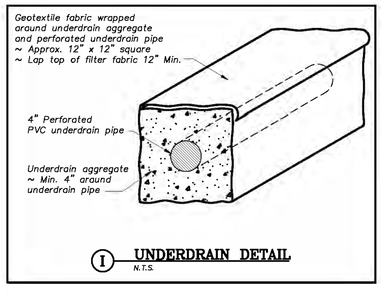

UNDERDRAIN DETAIL
(I) N.T.S.

GENERAL SUBGRADE NOTES

1. Slope all excavations for stability as required by OSHA.
2. In the event of a discrepancy of the subgrade limits between details, the larger limits shall prevail for granular fill and structural fill material.
3. Where trenches or other miscellaneous excavations occur within layers of subgrade material, the backfill of those excavations shall be of the same subgrade material as the corresponding layer it is installed in.
4. Granular fill shall be maintained clean and protected from contamination.

waters edge AQUATIC DESIGN
11205 W. 79th St.
Lenexa, KS 66214
t. 913.438.4338
www.WeDesignPools.com
Oklahoma STATE CERTIFICATE OF AUTHORITY #3893

NORMAN, OKLAHOMA
Westwood Family Aquatic Center

Seal:

Jeff Bartley–ENGINEER
LICENSE #20290

Date: 06-03-16 Job #: 16-502
Drawn: SRS Checked: DWS
Issue: DD SUBMITTAL SET

SUBGRADE DETAILS

SP–C3

Water's Edge Aquatic Design © 2016

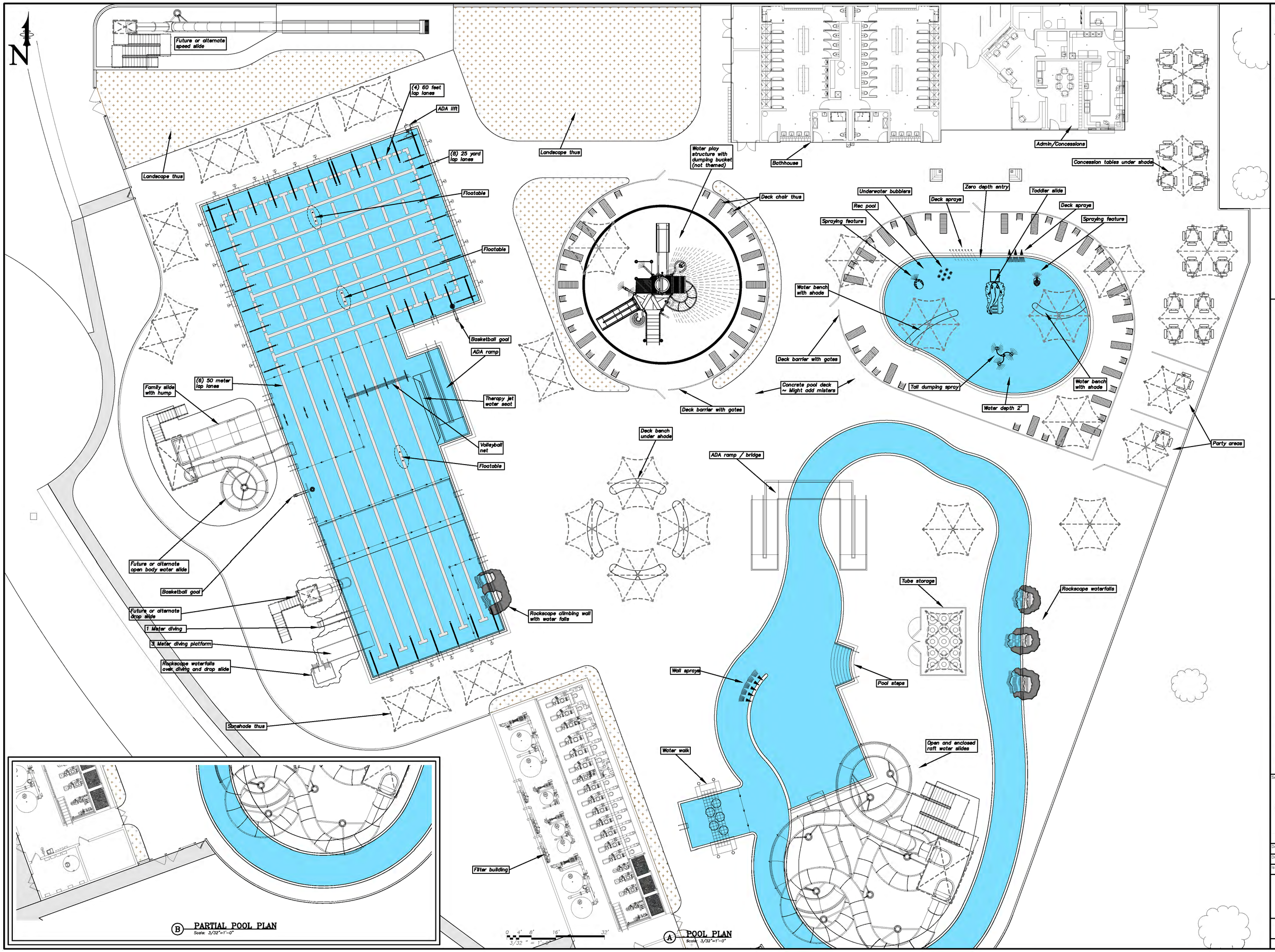

waters edge
AQUATIC DESIGN
11205 W. 79th St.
Lenexa, KS 66214
t. 913.438.4338
www.WeDesignPools.com
Oklahoma STATE CERTIFICATE OF AUTHORITY #3893

NORMAN, OKLAHOMA
Westwood Family Aquatic Center

Seal:

Jeff Bartley–ENGINEER
LICENSE #20292

Date: 06-03-16		Job #: 16-502	
Drawn: SRS		Checked: DWS	
Issue: DD SUBMITTAL SET			

POOL PLAN

SP–P1

Water's Edge Aquatic Design © 2016

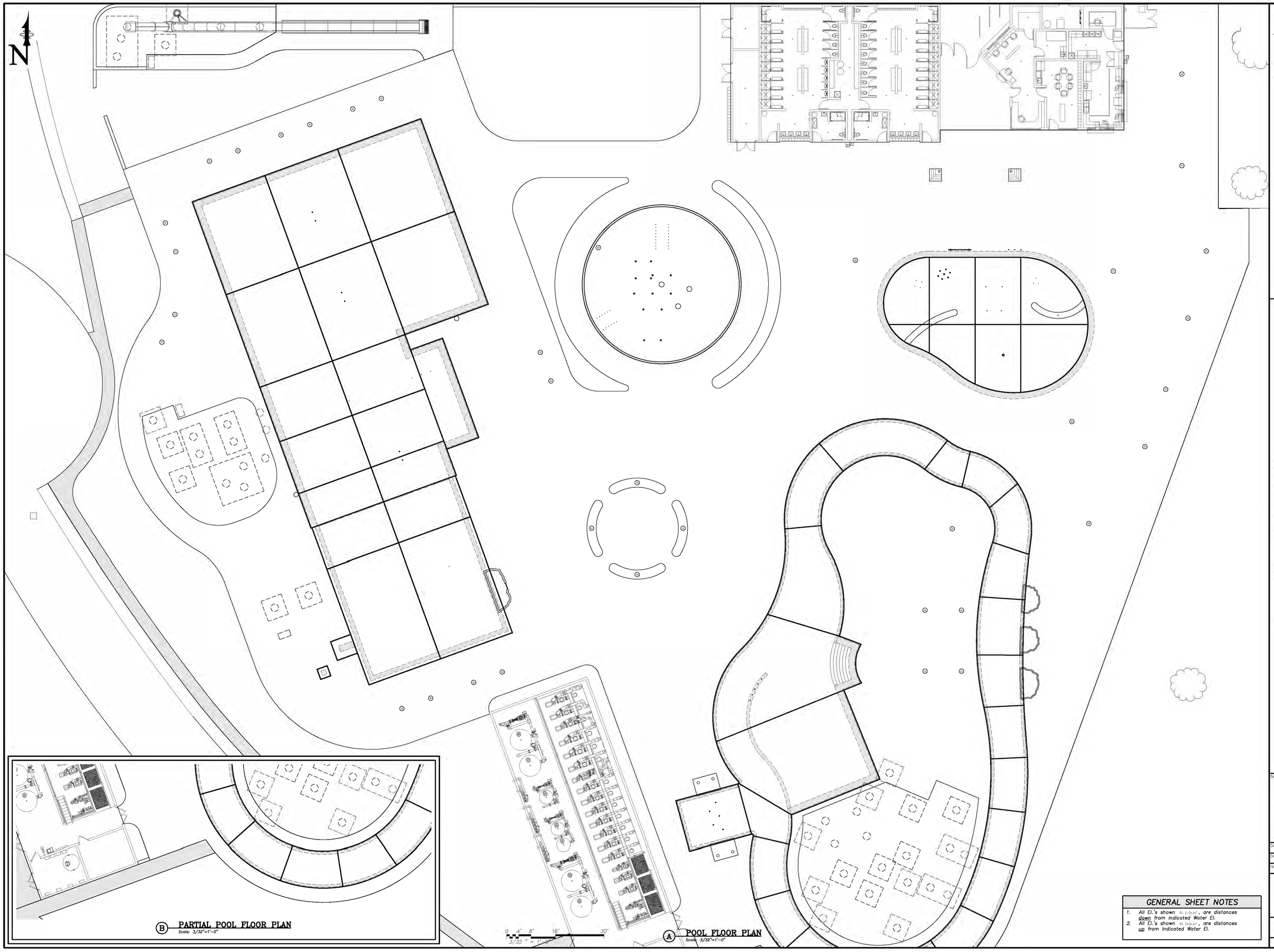

B PARTIAL POOL FLOOR PLAN
Scale: 3/32"=1'-0"

A POOL FLOOR PLAN
Scale: 3/32"=1'-0"

GENERAL SHEET NOTES

1. All El.'s shown El. (-)x.xx', are distances down from indicated Water El.
2. All El.'s shown El. (+)x.xx', are distances up from indicated Water El.

waters edge
AQUATIC DESIGN
11205 W. 79th St.
Lenexa, KS 66214
t. 913.438.4338
www.WeDesignPools.com
Oklahoma STATE CERTIFICATE OF AUTHORITY #3893

NORMAN, OKLAHOMA
Westwood Family Aquatic Center

Seal:

Jeff Bartley-ENGINEER
LICENSE #20292

Date: 06-03-16		Job #: 16-502	
Drawn: SRS		Checked: DWG	
Issue: DD SUBMITTAL SET			

POOL FLOOR PLAN

SP-P2

Water's Edge Aquatic Design © 2016

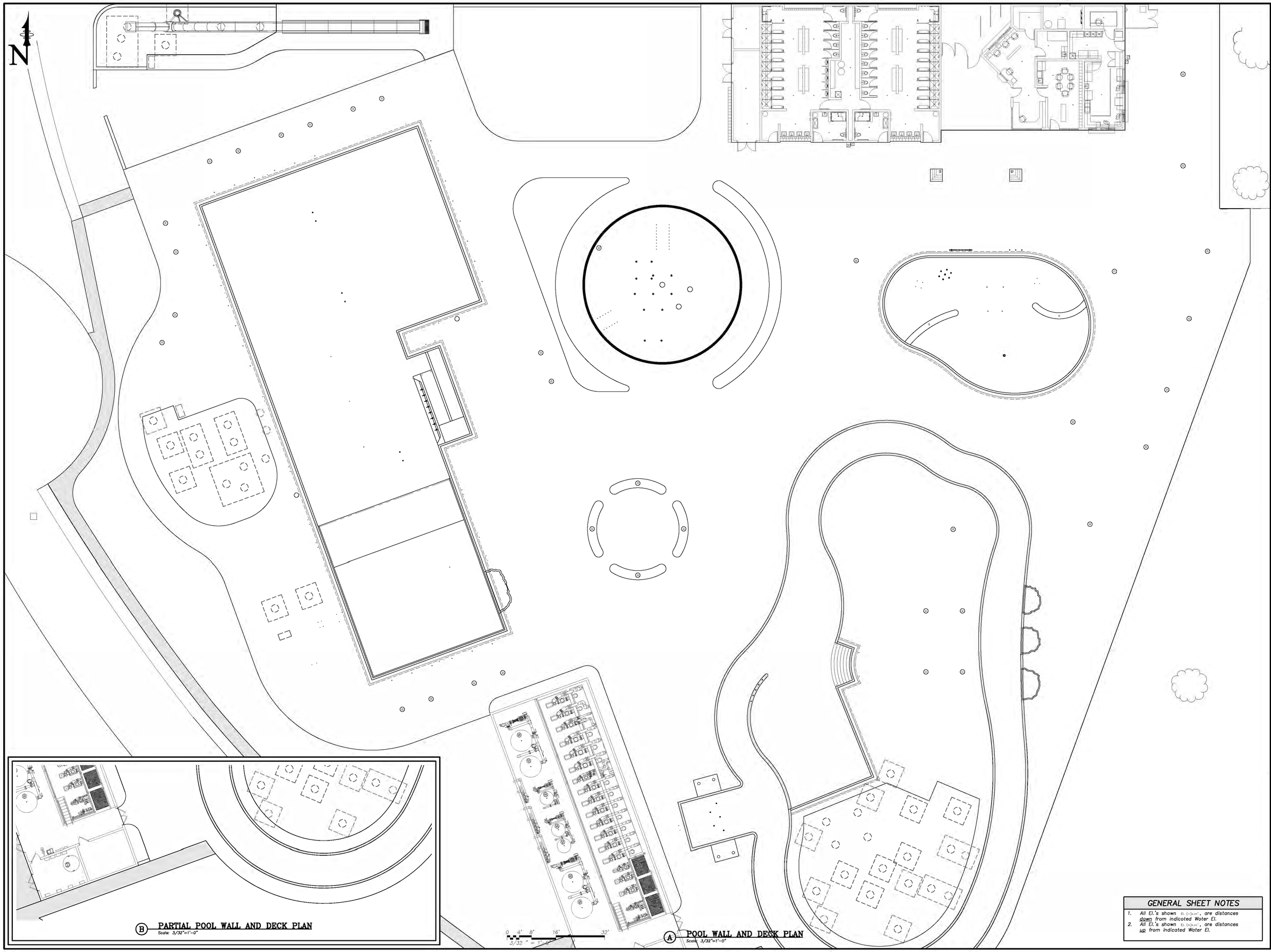

GENERAL SHEET NOTES

1. All El.'s shown EL (-)x.xx', are distances down from indicated Water El.
2. All El.'s shown EL (+)x.xx', are distances up from indicated Water El.

waters edge
AQUATIC DESIGN
11205 W. 79th St.
Lenexa, KS 66214
t. 913.438.4338
www.WeDesignPools.com
Oklahoma STATE CERTIFICATE OF AUTHORITY #3893

NORMAN, OKLAHOMA
Westwood
Family Aquatic Center

Seal:

Jeff Bartley–ENGINEER
LICENSE #20290

Date: 06-03-16	Job #: 16-502
Drawn: SRS	Checked: DWS
Issue: DD SUBMITTAL SET	

POOL
WALL
AND DECK
PLAN

SP–P3

Water's Edge Aquatic Design
© 2016

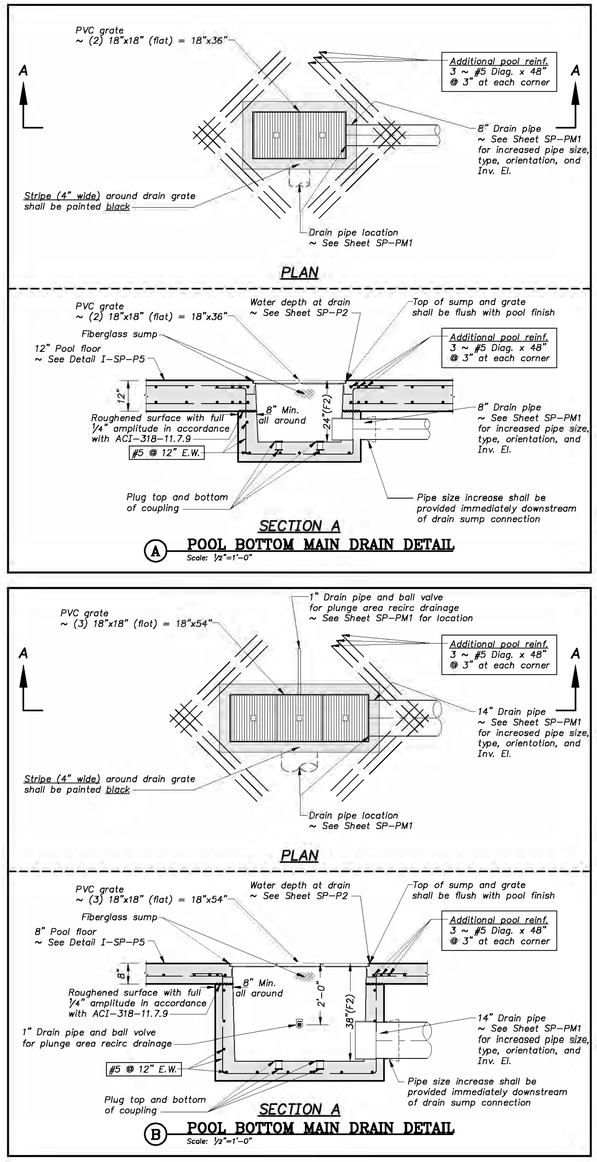

A POOL BOTTOM MAIN DRAIN DETAIL
Scale: 1/2"=1'-0"

B POOL BOTTOM MAIN DRAIN DETAIL
Scale: 1/2"=1'-0"

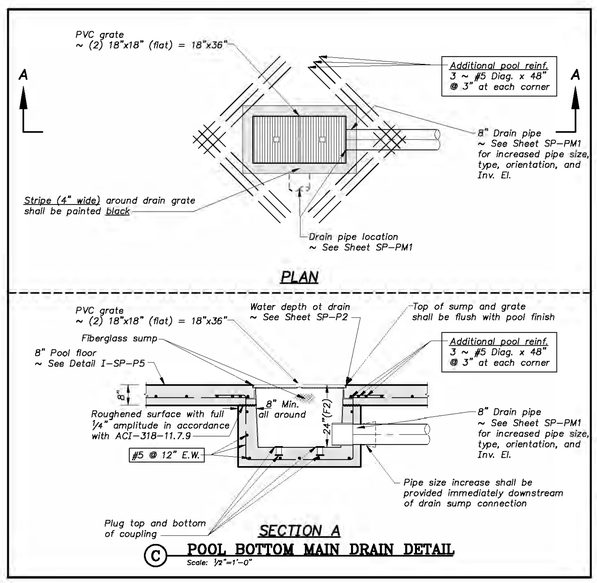

C POOL BOTTOM MAIN DRAIN DETAIL
Scale: 1/2"=1'-0"

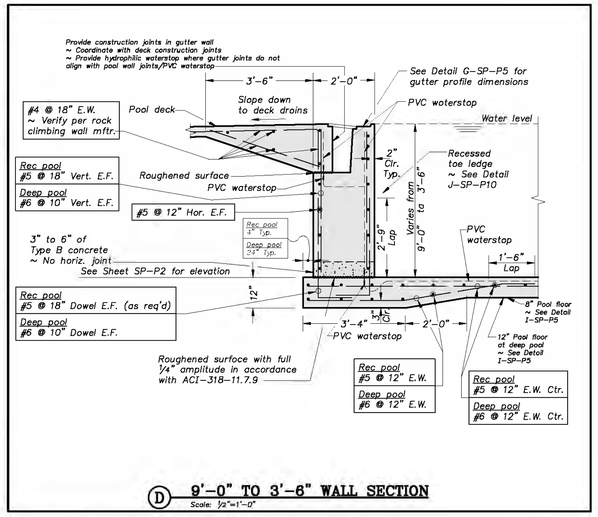

D 9'-0" TO 3'-6" WALL SECTION
Scale: 1/2"=1'-0"

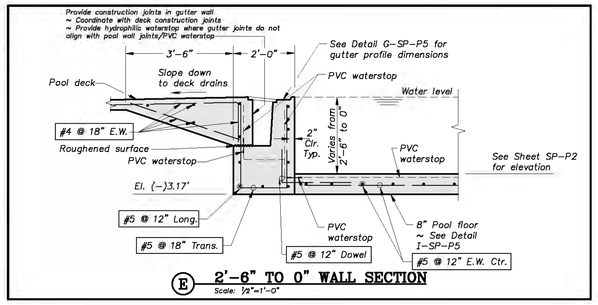

E 2'-6" TO 0" WALL SECTION
Scale: 1/2"=1'-0"

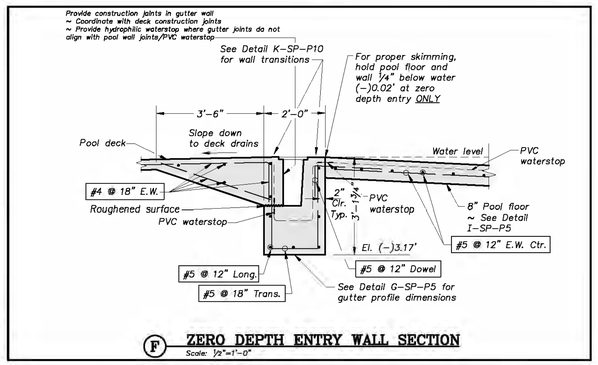

F ZERO DEPTH ENTRY WALL SECTION
Scale: 1/2"=1'-0"

NOTES:
1. All gutter grating corners shall be prefabricated per mftr.
2. Concrete seat for prefabricated gutter grating corners shall be held down as req'd for different depths and flush fit
3. Concrete seat shall slope uniformly as req'd for gutter grating slope

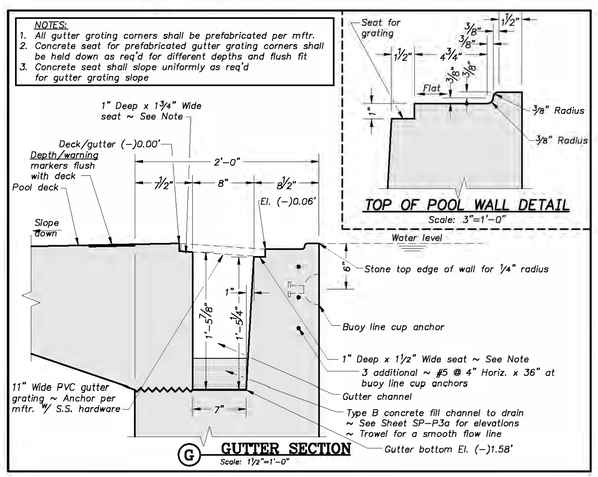

G GUTTER SECTION
Scale: 1 1/2"=1'-0"

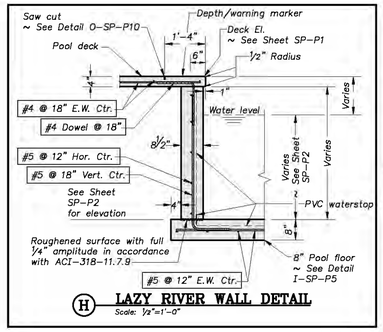

H LAZY RIVER WALL DETAIL
Scale: 1/2"=1'-0"

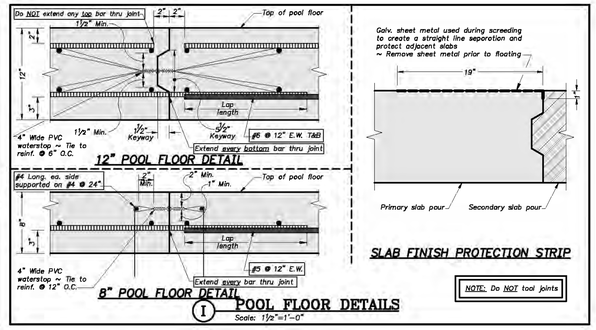

I POOL FLOOR DETAILS
Scale: 1 1/2"=1'-0"

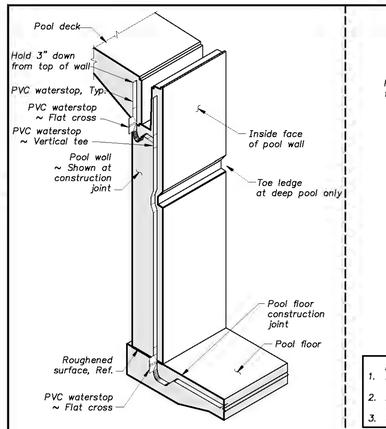

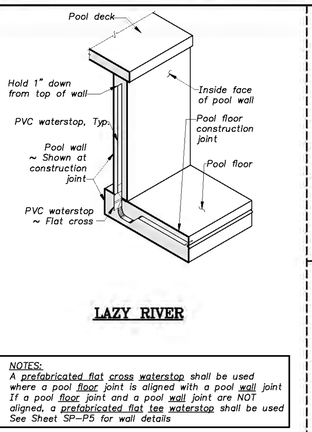

NOTES:
1. A prefabricated flat cross waterstop shall be used where a pool floor joint is aligned with a pool wall joint
2. If a pool floor joint and a pool wall joint are NOT aligned, a prefabricated flat tee waterstop shall be used
3. See Sheet SP-P5 for wall details

J WATERSTOP DETAILS
N.T.S.

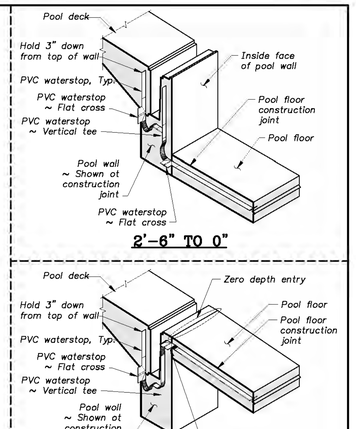

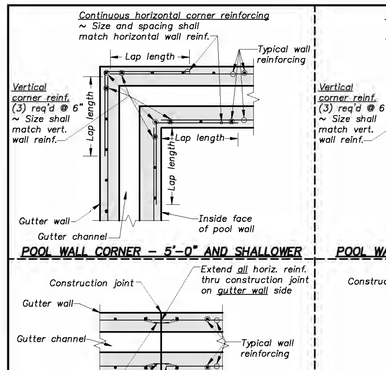

K WALL REINFORCING DETAILS
Scale: 1/2"=1'-0"

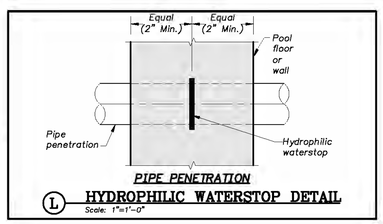

L HYDROPHILIC WATERSTOP DETAIL
Scale: 1"=1'-0"

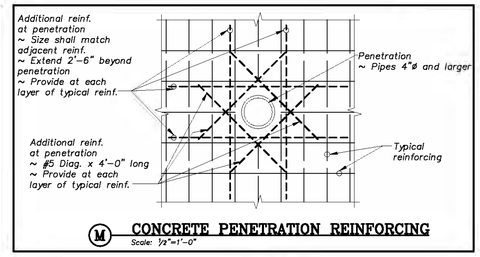

M CONCRETE PENETRATION REINFORCING
Scale: 1/2"=1'-0"

LAP LENGTH SCHEDULE

BAR SIZE	LAP LENGTH	HOOK LENGTH
#3	19"	7"
#4	26"	10"
#5	31"	12"
#6	37"	15"
#7	54"	17"
#8	62"	19"

NOTES:
1. Bar lap length of smaller diameter bar shall be used when splicing different size bars.
2. Lap splices shall be wired in contact.
3. Tabulated values are based on 4000 psi, normal weight concrete with Grade 60 reinf.

CONCRETE PROTECTION FOR REINFORCEMENT

CONDITION	MIN. COVER (INCHES)
Concrete cast against and permanently exposed to earth, subgrade, or granular fill	3"
Formed or top surfaces exposed to weather, submerged, or in contact with earth, including stirrups, ties, or spirals	2"
Formed concrete not exposed to earth, liquids, or weather:	
Slabs, walls, and joists	1 1/2"
Beams and columns primary reinforcement, ties, stirrups, and spirals	1 1/2"

NOTES:
1. The above minimum concrete cover shall be provided for reinforcement unless noted otherwise.
2. Placing reinforcement tolerances:
   a. For members less than or equal to 8" Tolerance = (±1/8")
   b. For members greater than 8" Tolerance = (±1/2")

GENERAL SHEET NOTES

1. All El.'s shown (-)x.xx', are distances down from indicated Water El.
2. All El.'s shown (+)x.xx', are distances up from indicated Water El.
3. Form savers may be used at Contractor's option
4. Hold waterstop 1" clear Min. from reinforcing. Tie to reinforcing/tie rod @ 6" O.C.
5. All form ties shall be 1 1/2" deep, cone snap type

waters edge AQUATIC DESIGN
11205 W. 79th St.
Lenexa, KS 66214
t. 913.438.4338
www.WeDesignPools.com
Oklahoma STATE CERTIFICATE OF AUTHORITY #3893

NORMAN, OKLAHOMA
Westwood
Family Aquatic Center

Seal:

Jeff Bartley-ENGINEER
LICENSE #20293

Date: 06-03-15	Job #: 15-502
Drawn: SRS	Checked: DWG
Issue: DD SUBMITTAL SET	

POOL FLOOR AND WALL DETAILS

SP-P5

Water's Edge Aquatic Design © 2015

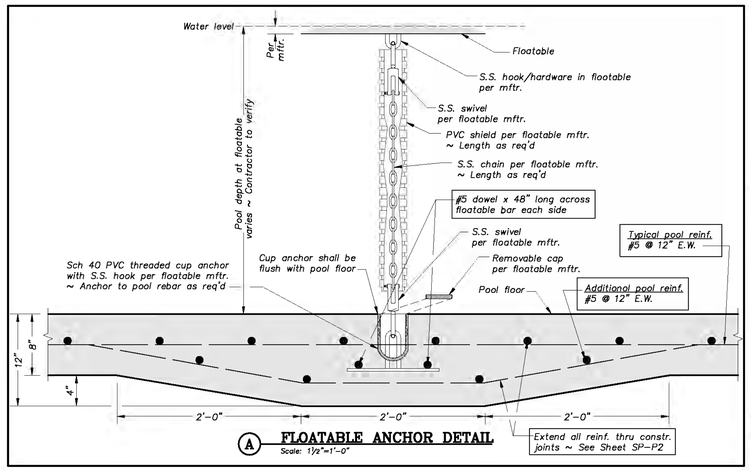

A FLOATABLE ANCHOR DETAIL
Scale: 1½"=1'-0"

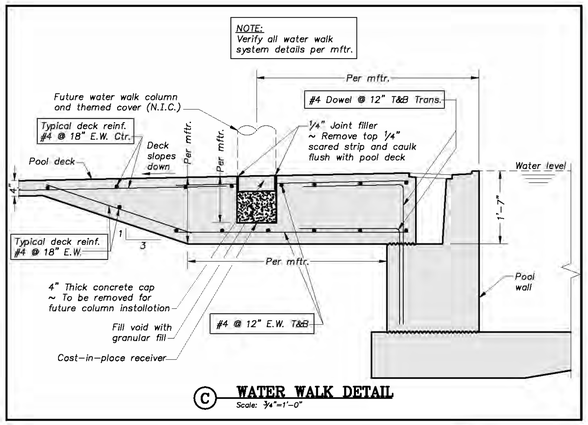

C WATER WALK DETAIL
Scale: ¾"=1'-0"

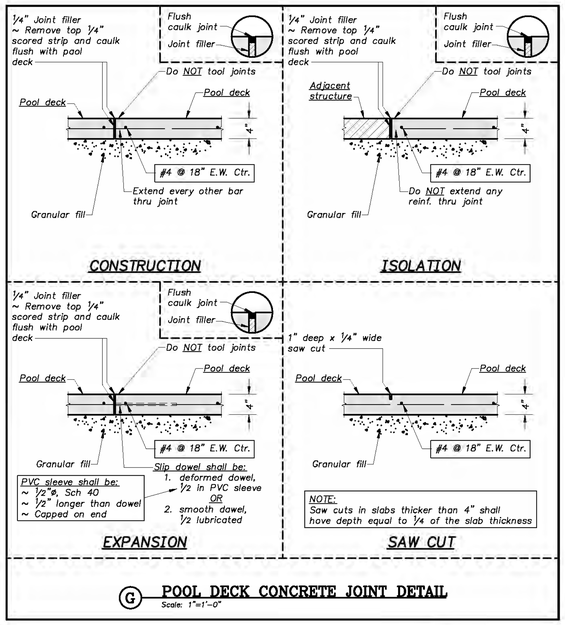

G POOL DECK CONCRETE JOINT DETAIL
Scale: 1"=1'-0"

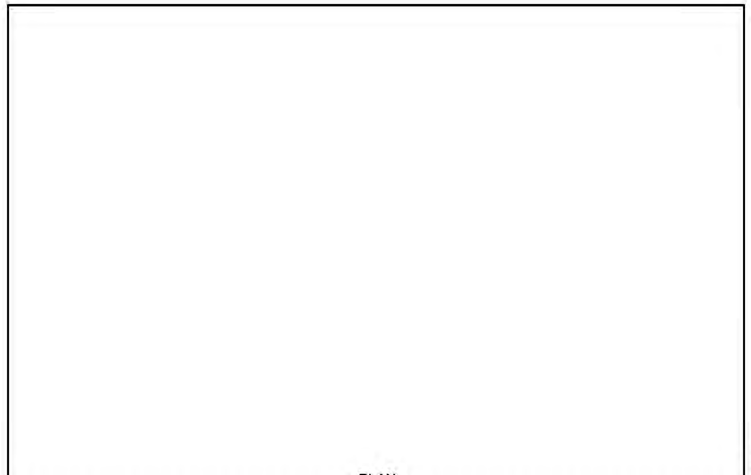

B ADA POOL STEPS DETAIL
Scale: ½"=1'-0"

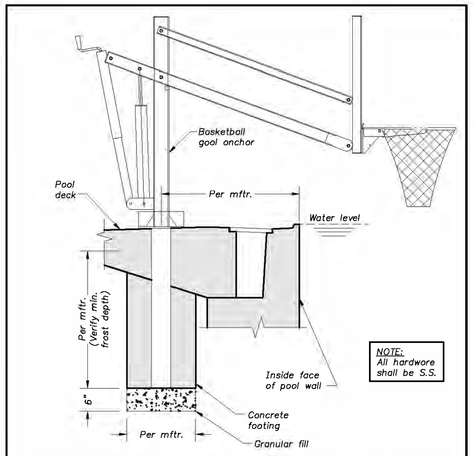

D BASKETBALL GOAL ANCHOR DETAIL
Scale: ¾"=1'-0"

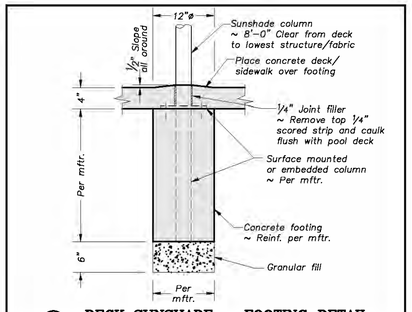

E DECK SUNSHADE – FOOTING DETAIL
Scale: 1"=1'-0"

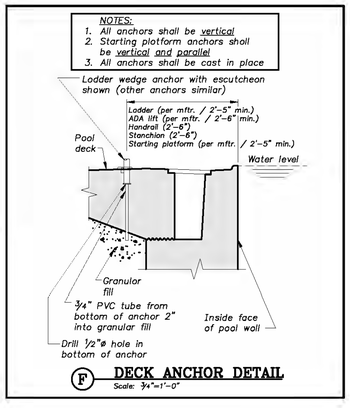

F DECK ANCHOR DETAIL
Scale: ¾"=1'-0"

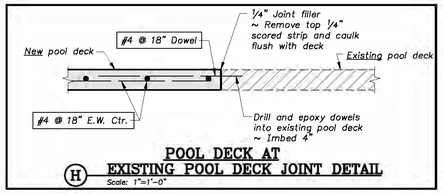

H POOL DECK AT EXISTING POOL DECK JOINT DETAIL
Scale: 1"=1'-0"

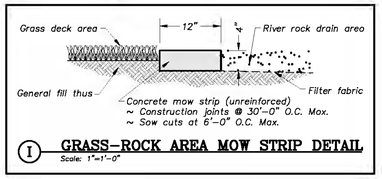

I GRASS-ROCK AREA MOW STRIP DETAIL
Scale: 1"=1'-0"

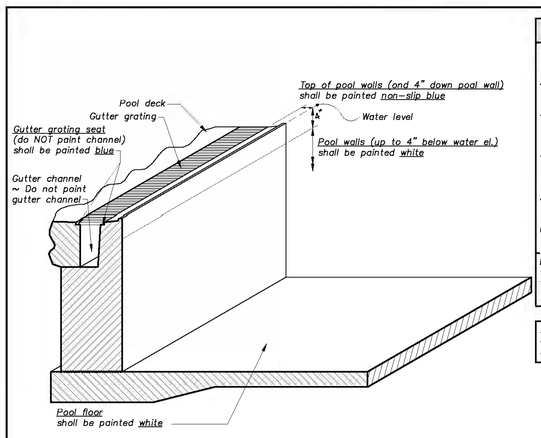

J POOL FINISH DETAIL
N.T.S.

POOL FINISH NOTES

1. Pool basin
   ~ See Detail at Left
2. Stripe around drain grate
   ~ See Detail A-SP-P5 for finish
3. Toe ledge at diving area (top and 1" down the side) shall be painted non-slip black
   ~ See Detail K-SP-P5 for finish
4. Warning stripe (4" wide) at 5'-0" depth on pool floor and walls shall be painted black
   ~ See Detail K-SP-P5 for finish
5. Pool steps
   ~ See Detail B-SP-P6 for finish
6. Therapy water seat
   ~ See Detail F-SP-PM2 for finish

Exposed formed surfaces shall have a grout cleaned finish. Surfaces include, but are not limited to, the above and below:
Water slide foundation columns, step risers

All colors indicated are approximate and will be selected by Owner and included in project color schedule

Contractor shall provide (3) coats of each color

waters edge AQUATIC DESIGN
11205 W. 79th St.
Lenexa, KS 66214
t. 913.438.4338
www.WeDesignPools.com
Oklahoma STATE CERTIFICATE OF AUTHORITY #3893

NORMAN, OKLAHOMA
Westwood Family Aquatic Center

Seal:

Jeff Bartley-ENGINEER
LICENSE #20290

Date:	06-03-16	Job #:	16-502
Drawn:	SRS	Checked:	DWS
Issue:	DD SUBMITTAL SET		

POOL AREA DETAILS

SP-P7

Water's Edge Aquatic Design © 2016

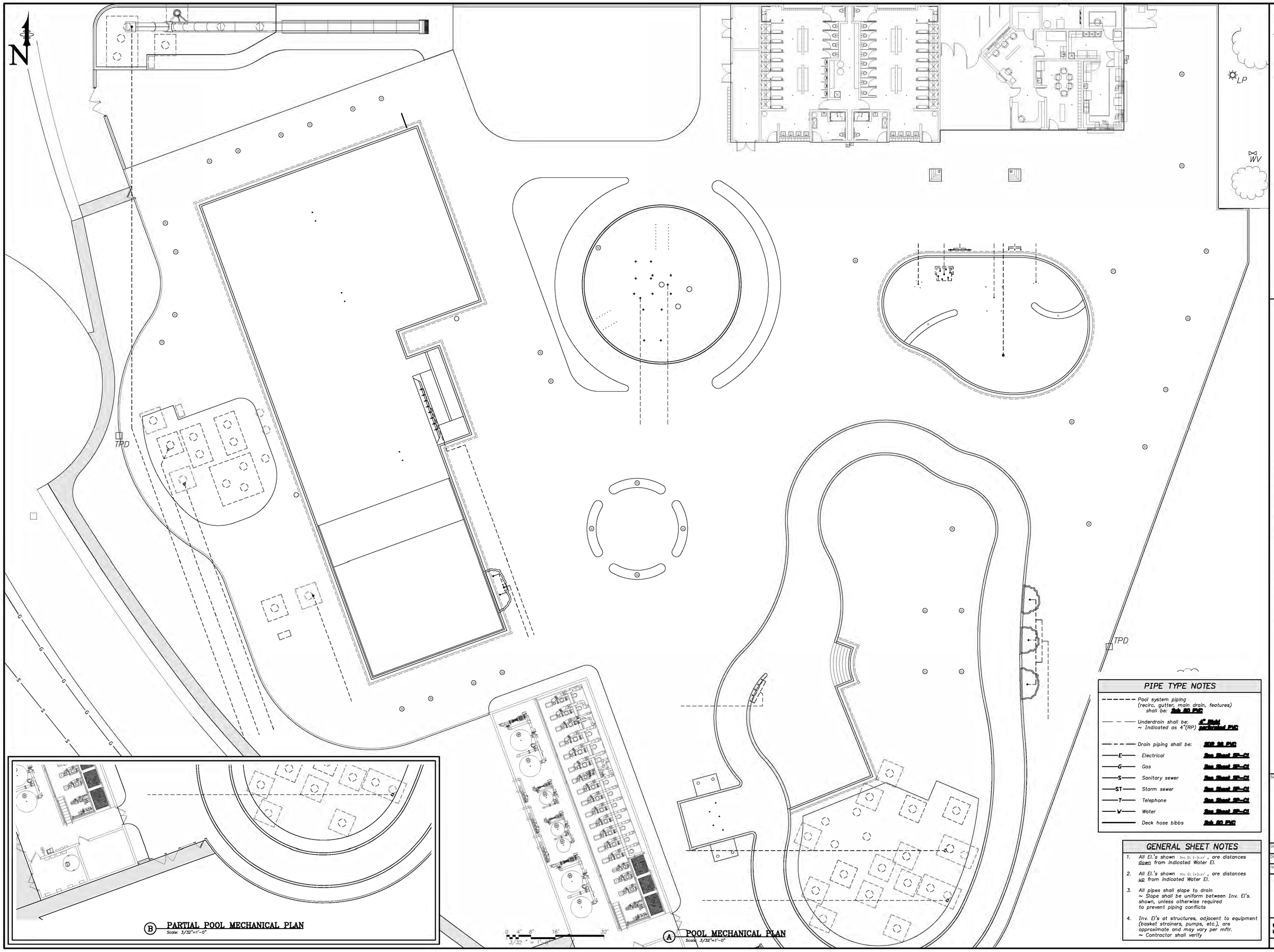

PIPE TYPE NOTES

Pool system piping (recirc, gutter, main drain, features) shall be:	Sch 80 PVC
Underdrain shall be: ~ Indicated as 4"(RP)	4" Rigid perforated PVC
Drain piping shall be:	SCH 36 PVC
E Electrical	See Sheet SP-C1
G Gas	See Sheet SP-C1
S Sanitary sewer	See Sheet SP-C1
ST Storm sewer	See Sheet SP-C1
T Telephone	See Sheet SP-C1
W Water	See Sheet SP-C1
Deck hose bibbs	Sch 80 PVC

GENERAL SHEET NOTES

1. All El.'s shown Inv. El. (-)x.xx', are distances down from indicated Water El.
2. All El.'s shown Inv. El. (+)x.xx', are distances up from indicated Water El.
3. All pipes shall slope to drain ~ Slope shall be uniform between Inv. El's. shown, unless otherwise required to prevent piping conflicts
4. Inv. El's at structures, adjacent to equipment (basket strainers, pumps, etc.), are approximate and may vary per mftr. ~ Contractor shall verify

waters edge AQUATIC DESIGN
11205 W. 79th St.
Lenexa, KS 66214
t. 913.438.4338
www.WeDesignPools.com
Oklahoma STATE CERTIFICATE OF AUTHORITY #3893

NORMAN, OKLAHOMA
Westwood Family Aquatic Center

Seal:

Jeff Bartley–ENGINEER
LICENSE #20292

Date: 06-03-16	Job #: 16-502		
Drawn: SRS	Checked: DWS		
Issue: DD SUBMITTAL SET			

POOL MECHANICAL PLAN

SP–PM1

Water's Edge Aquatic Design © 2016

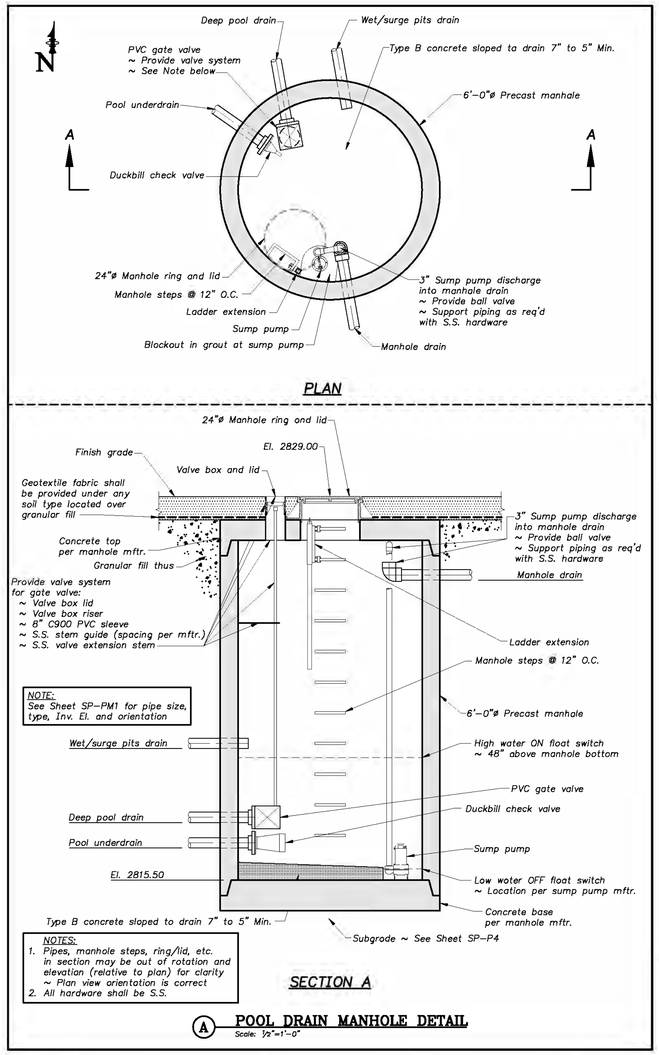

A POOL DRAIN MANHOLE DETAIL
Scale: 1/2"=1'-0"

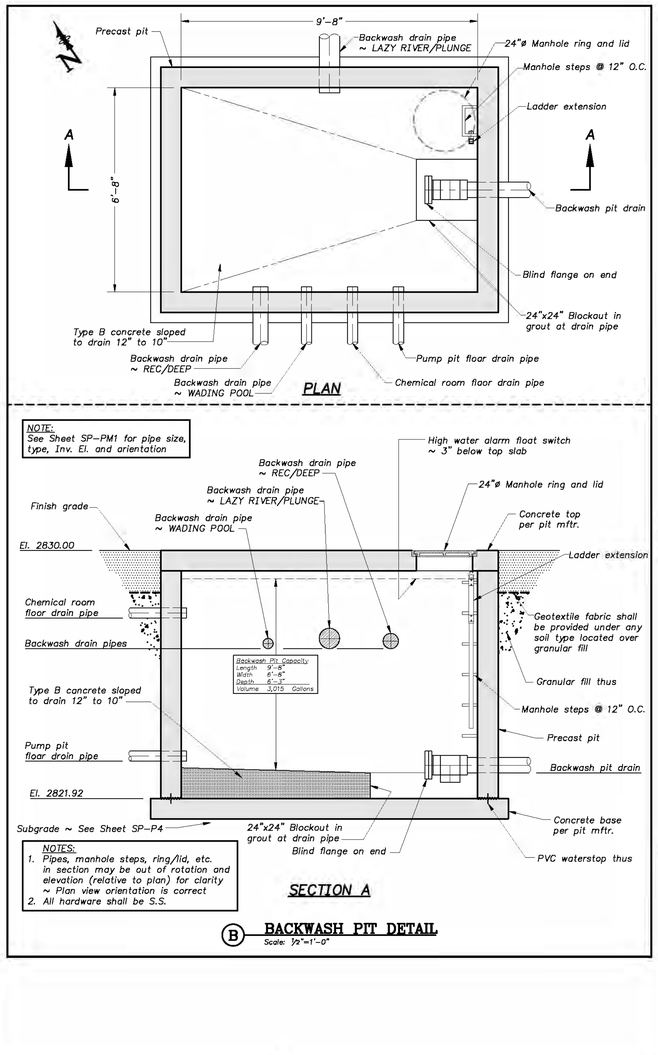

B BACKWASH PIT DETAIL
Scale: 1/2"=1'-0"

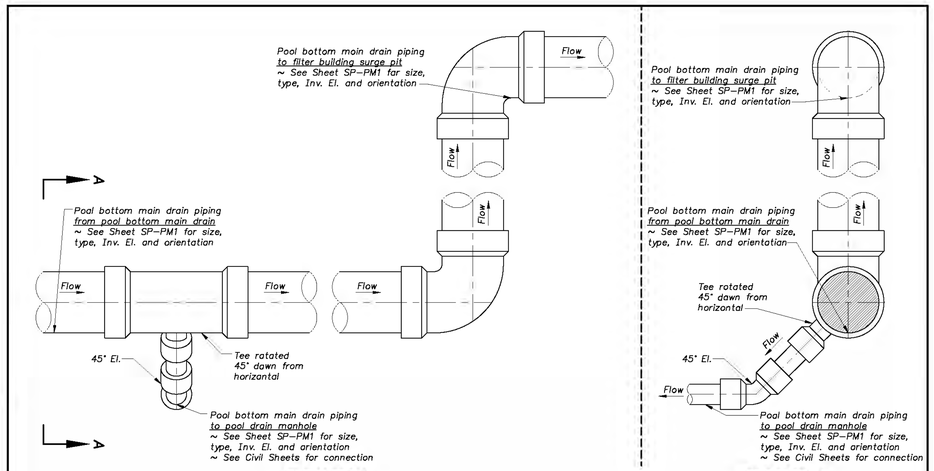

C POOL DRAIN PIPING DETAIL
Scale: 1"=1'-0"

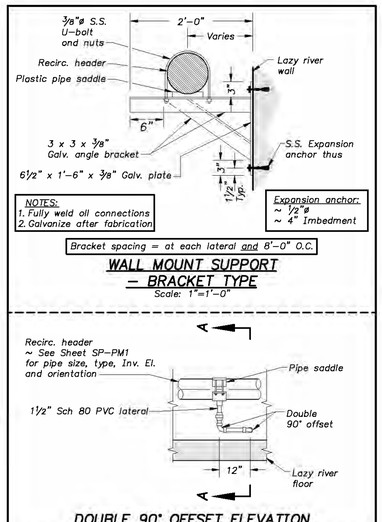

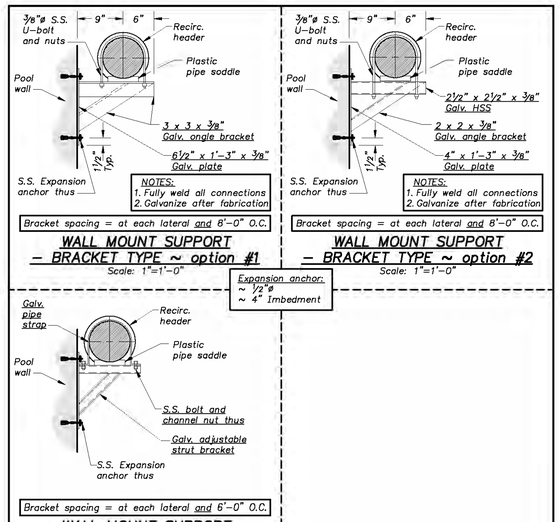

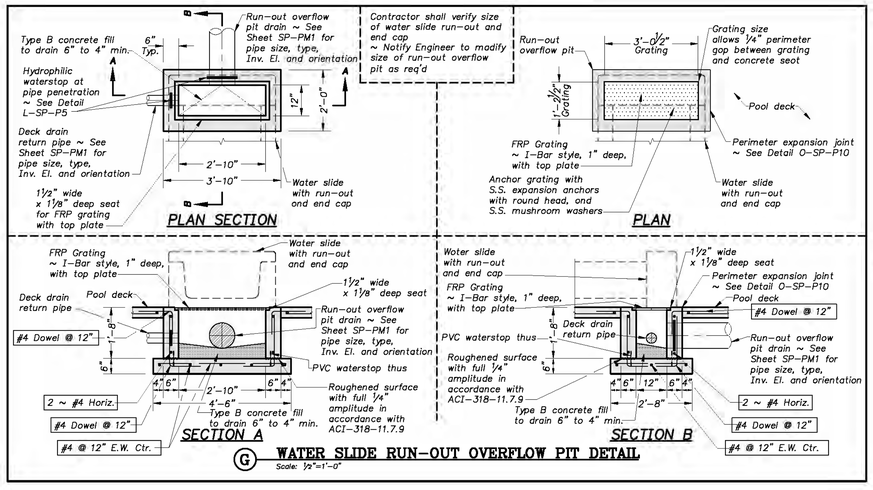

G WATER SLIDE RUN-OUT OVERFLOW PIT DETAIL
Scale: 1/2"=1'-0"

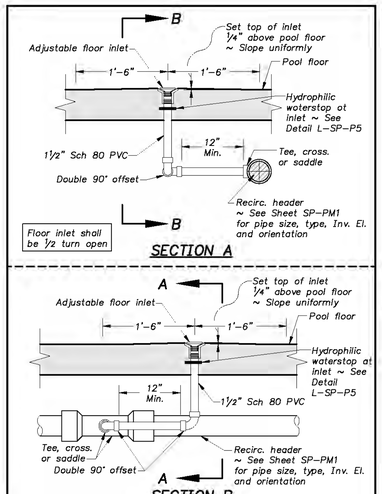

F FLOOR INLET DETAIL
Scale: 1"=1'-0"

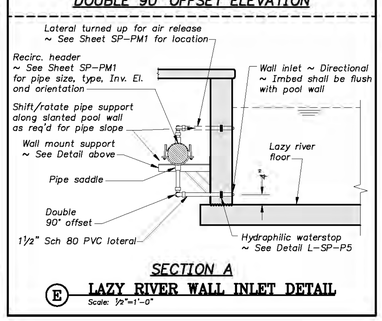

E LAZY RIVER WALL INLET DETAIL
Scale: 1/2"=1'-0"

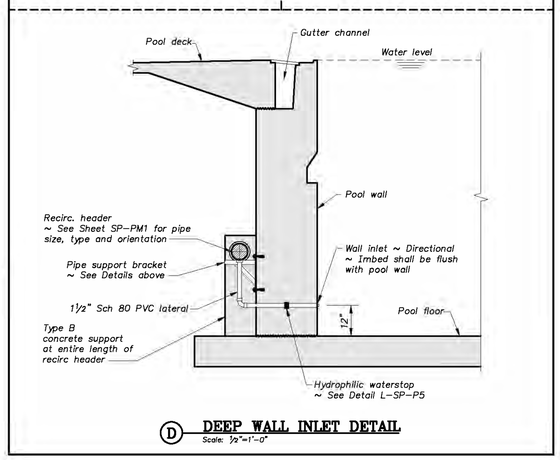

D DEEP WALL INLET DETAIL
Scale: 1/2"=1'-0"

waters edge
AQUATIC DESIGN
11205 W. 79th St.
Lenexa, KS 66214
t. 913.438.4338
www.WeDesignPools.com
Oklahoma STATE CERTIFICATE OF AUTHORITY #3893

NORMAN, OKLAHOMA
Westwood
Family Aquatic Center

Seal:

Jeff Bartley-ENGINEER
LICENSE #20292

Date: 06-03-15	Job #: 15-502
Drawn: SRS	Checked: DWG
Issue: DD SUBMITTAL SET	

POOL
MECHANICAL
STRUCTURE
DETAILS

SP-PM2

Water's Edge Aquatic Design
© 2015

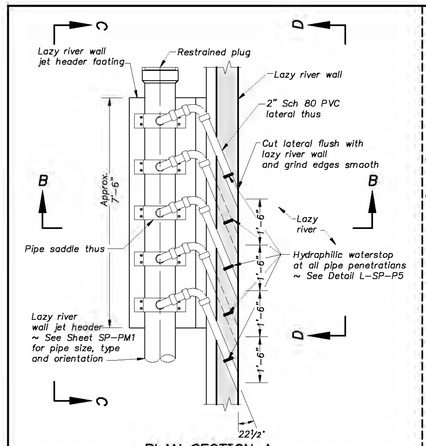

PLAN SECTION A

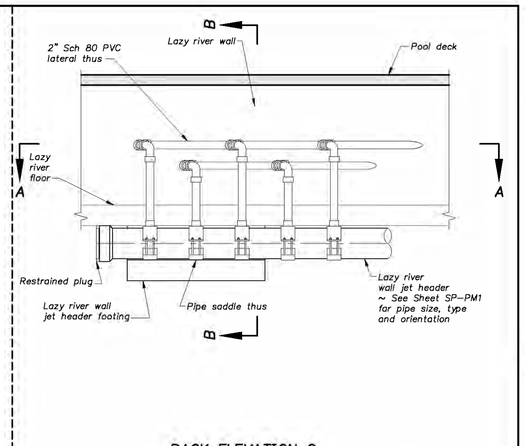

BACK ELEVATION C

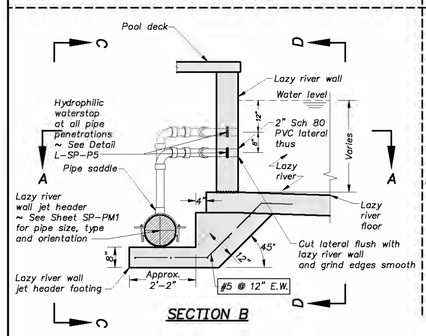

SECTION B

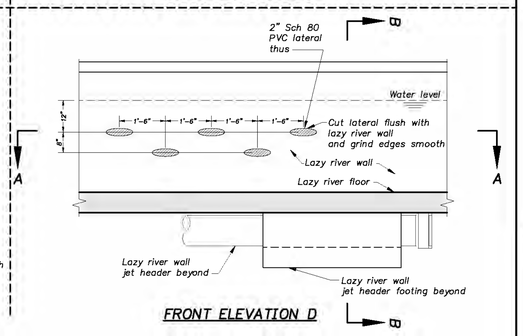

FRONT ELEVATION D

I LAZY RIVER WALL JET INLET DETAIL
Scale: ½"=1'-0"

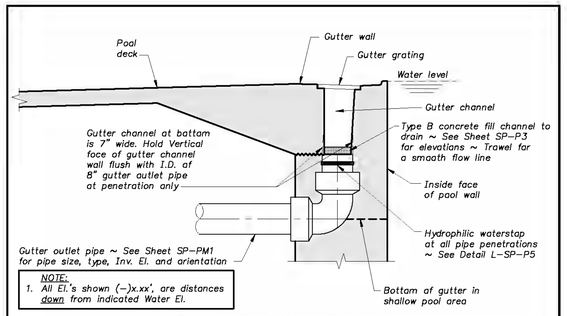

NOTE:
1. All El.'s shown (–)x.xx', are distances down from indicated Water El.

J GUTTER OUTLET DETAIL
Scale: ¾"=1'-0"

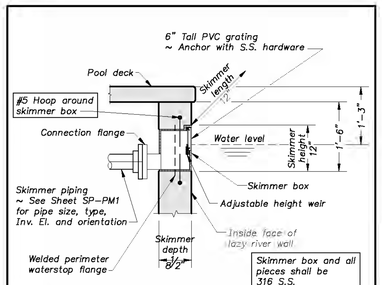

K LAZY RIVER SKIMMER DETAIL
Scale: ¾"=1'-0"

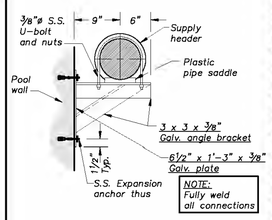

NOTES:
1. Fully weld all connections
2. Galvanize after fabrication

Bracket spacing = at each lateral and 8'-0" O.C.

WALL MOUNT SUPPORT – BRACKET TYPE ~ option #1
Scale: 1"=1'-0"

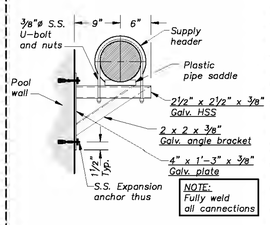

NOTES:
1. Fully weld all connections
2. Galvanize after fabrication

Bracket spacing = at each lateral and 8'-0" O.C.

WALL MOUNT SUPPORT – BRACKET TYPE ~ option #2
Scale: 1"=1'-0"

Expansion anchor:
~ ½"ø
~ 4" Imbedment

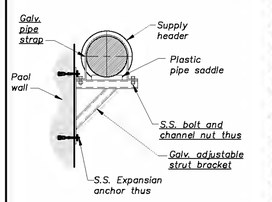

Bracket spacing = at each lateral and 6'-0" O.C.

WALL MOUNT SUPPORT – BRACKET TYPE ~ option #3
Scale: 1"=1'-0"

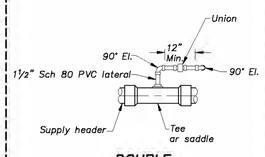

DOUBLE 90° OFFSET ELEVATION

PLAN SECTION
Scale: ⅜"=1'-0"

NOTES:
1. All El.'s shown (–)x.xx', are distances down from indicated Water El.

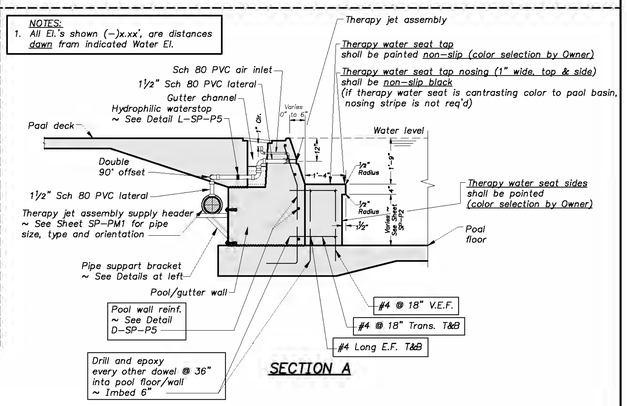

SECTION A

REINFORCING AND BONDING NOTE:
Reinforcing that is cast-in-place or drilled & epoxied, or other metallic items, shall be electrically bonded per: National Electrical Code, 680-26

L THERAPY WATER SEAT DETAIL
Scale: ½"=1'-0"

waters edge AQUATIC DESIGN
11205 W. 79th St.
Lenexa, KS 66214
t. 913.438.4338
www.WaDesignPools.com
Oklahoma STATE CERTIFICATE OF AUTHORITY # 3893.3

NORMAN, OKLAHOMA
Westwood Family Aquatic Center

Seal:

Jeff Bartley–ENGINEER
LICENSE #30290

Date: 06-03-16	Job #: 16-502
Drawn: SRS	Checked: DWS
Issue: 00 SUBMITTAL SET	

POOL MECHANICAL STRUCTURE DETAILS

SP–PM3

Water's Edge Aquatic Design © 2016

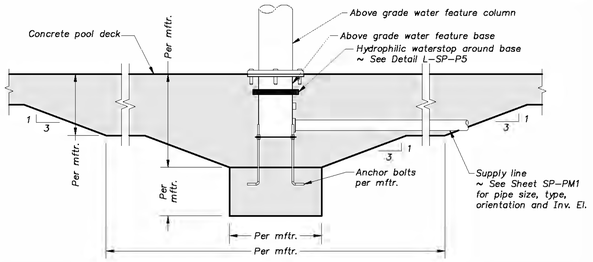

(O) "WATER ODYSSEY" ABOVE GRADE ANCHOR DETAIL
Scale: 1"=1'-0"

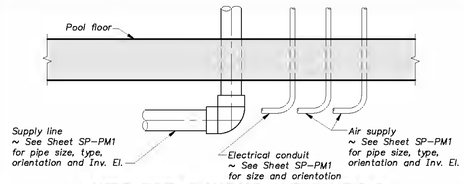

WATER SUPPLY ANCHOR AND CONTROLS

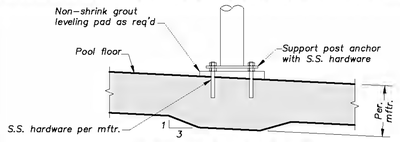

SUPPORT POST ANCHOR

(P) "SPLASHTACULAR" WATER PLAY STRUCTURE ANCHOR DETAIL
Scale: 1"=1'-0"

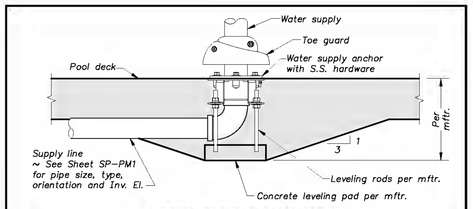

WATER SUPPLY ANCHOR

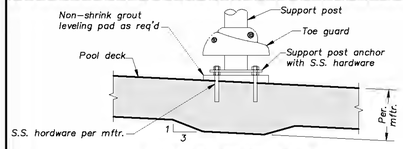

SUPPORT POST ANCHOR

(Q) "VORTEX" WATER PLAY STRUCTURE ANCHOR DETAIL
Scale: 1"=1'-0"

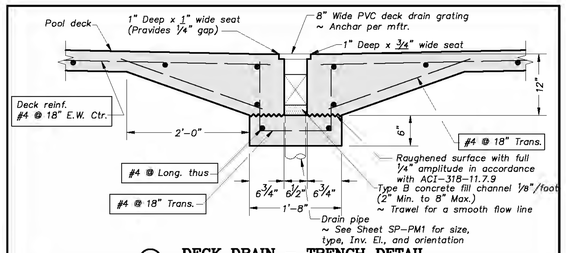

(R) DECK DRAIN - TRENCH DETAIL
Scale: 1"=1'-0"

waters edge
AQUATIC DESIGN
11205 W. 79th St.
Lenexa, KS 66214
t. 913.438.4338
www.WeDesignPools.com
Oklahoma STATE CERTIFICATE OF AUTHORITY # 3893.3

NORMAN, OKLAHOMA
Westwood
Family Aquatic Center

Seal:

Jeff Bartley-ENGINEER
LICENSE #30290

Date: 06-03-16	Job #: 16-502
Drawn: SRS	Checked: DWS
Issue: DD SUBMITTAL SET	

POOL MECHANICAL STRUCTURE DETAILS

SP-PM4

Water's Edge Aquatic Design
© 2016

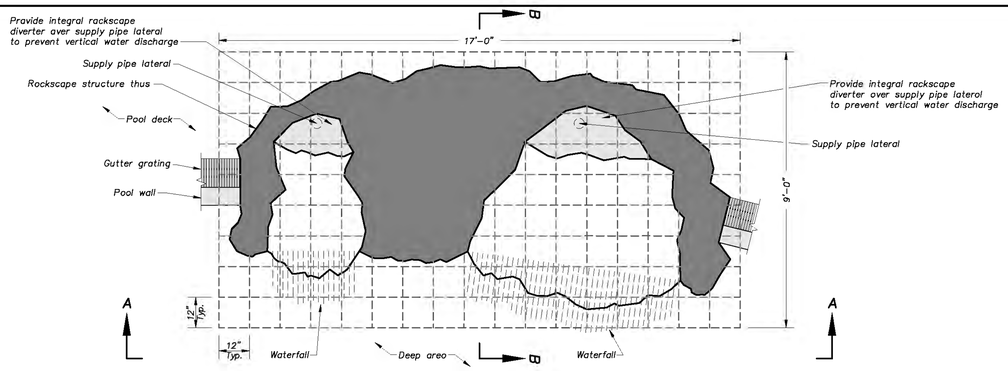

PLAN

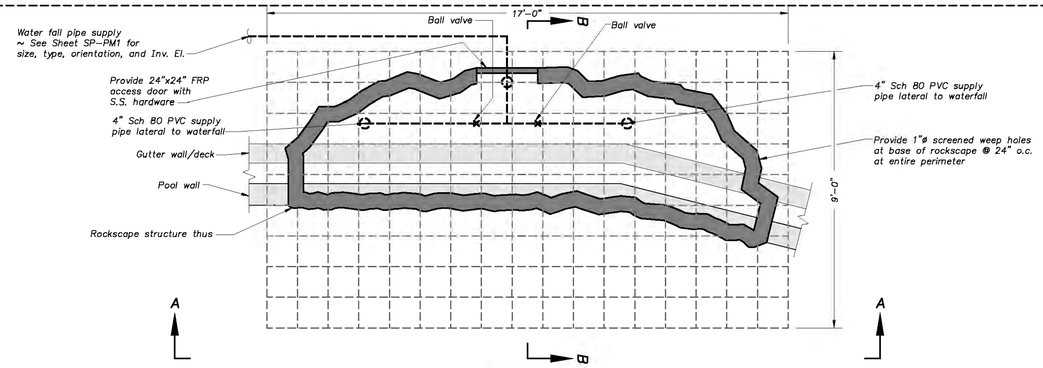

PLAN SECTION

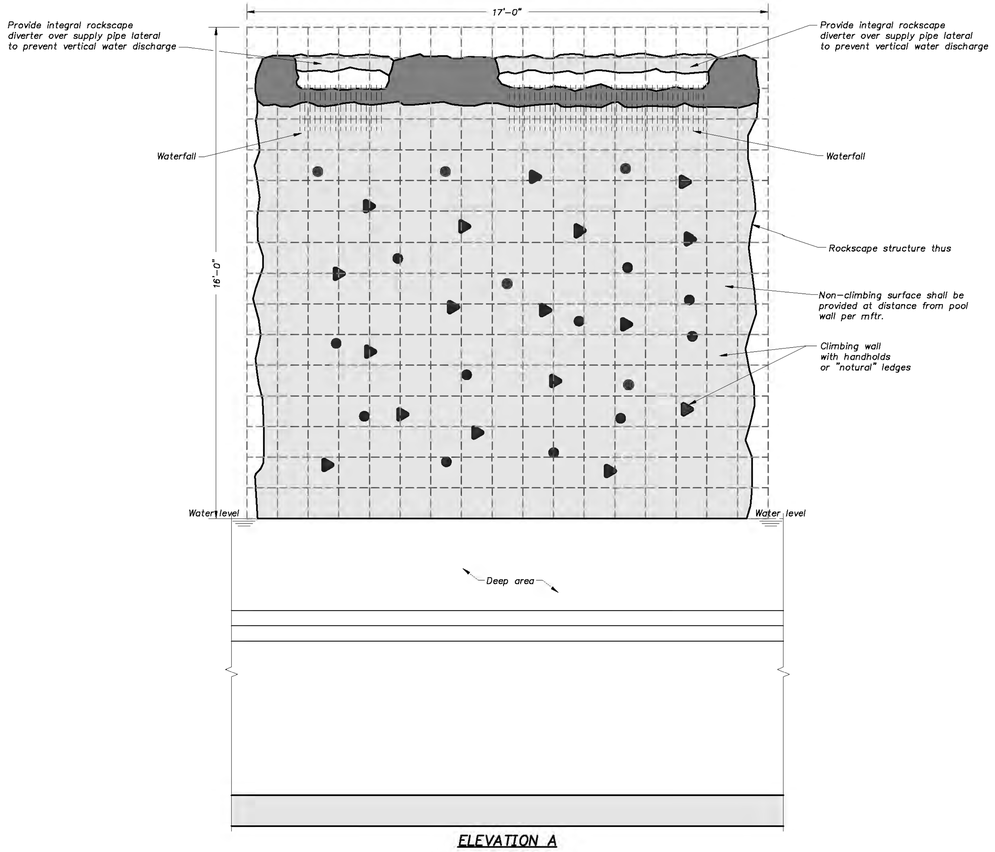

ELEVATION A

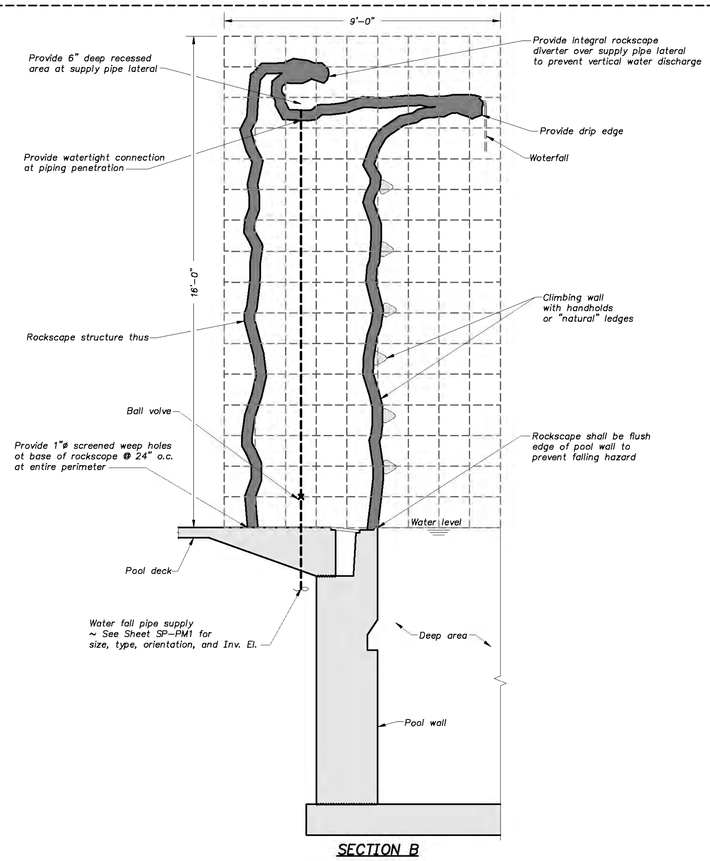

SECTION B

ROCKSCAPE FINISH NOTES:
1. Rockscape and climbing wall finishes shall be coordinated between different mftrs.
2. All finishes shall be selected by Owner

ROCKSCAPE NOTES:
Rockscaped structure shall be formed to:
1. Conceal all piping from view
2. Provide for surface drainage of rockscape and slab beneath
3. Prevent ponding of water
4. Contractor shall provide scaled model to be reviewed by Owner
5. Have a minimum thickness per mftr. of GRP
6. Prevent penetration of light and water through shell
7. Allow access to the interior via access panel

STRUCTURE NOTES:
1. Rockscape structure support and structural system shall be 316 S.S. or hot-dipped galvanized, and shall be as req'd by supplier
2. Any additional structural items (eg. S.S. plate over gutter channel) shall be provided by mftr.

PIPING NOTES:
1. Support all piping with 316 S.S. or FRP pipe supports
2. All ball valves shall be within 24" of access door

STRUCTURAL SLAB NOTES:
1. Slab beneath rockscape shall be thickened as required by supplier and shall be coordinated with Contractor

REINFORCING AND BONDING NOTE:
Reinforcing that is cast-in-place or drilled & epoxied, or other metallic items shall be electrically bonded per: National Electrical Code, 680-26

(X) ROCKSCAPE WATERFALL AND CLIMBING WALL – DEEP AREA DETAIL
Scale: 1/2"=1'-0"

waters edge AQUATIC DESIGN
11205 W. 79th St.
Lenexa, KS 66214
t. 913.438.4338
www.WeDesignPools.com
Oklahoma STATE CERTIFICATE OF AUTHORITY #3893

NORMAN, OKLAHOMA
Westwood Family Aquatic Center

Seal:

Jeff Bartley–ENGINEER
LICENSE #20290

Date: 06-03-16	Job #: 16-502
Drawn: SRS	Checked: DWS
Issue: DD SUBMITTAL SET	

POOL MECHANICAL STRUCTURE DETAILS

SP-PM5

Water's Edge Aquatic Design © 2016

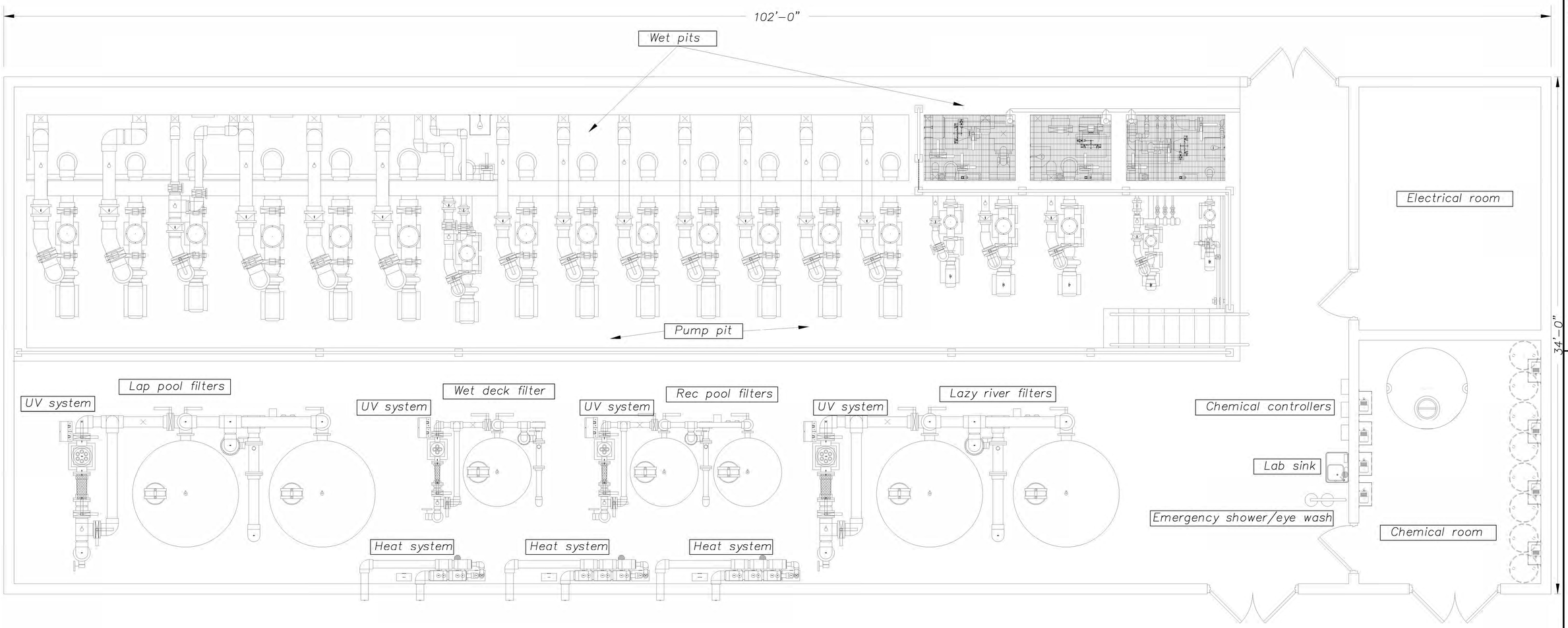

A FILTER AREA PLAN
Scale: 3/8"=1'-0"

Proposed pumps...

1. Lap/diving pool recirc
2. Family slide
3. Open body slide (future)
4. Drop slide (alternate or future)
5. Diving area rockscape waterfalls
6. Rockscape climbing wall waterfalls
7. Therapy seat water jets
8. Speed slide (future)

9. Lazy river recirc
10. Lazy river motive jets
11. Lazy river motive jets
12. Lazy river motive jets
13. Open raft water slide
14. Enclosed raft water slide
15. Lazy river water features

16. Rec pool recirc
17. Rec pool features
18. Water play structure
19. Wet deck recirc

PUMP DATA table
~ Open: \\SERVER02\Wecad\ACAD – Settings – WEAD\CommonName_PumpData.xls
~ Save to: \\SERVER02\Projects\project (yy-xxx)\3.0 Drawings
~ Highlight cells to be pasted into drawing
~ Edit / Paste Special / Paste Link

MAXIMUM PIPE SUPPORT SPACING (Feet) **

Pipe Size	Sch 80 PVC	Ductile Iron	Copper (L&K)	
1/2"	4.5	–	5.0	
3/4"	4.5	–	5.0	
1"	5.0	–	6.0	
1 1/4"	5.0	–	7.0	
1 1/2"	5.5	–	8.0	
2"	6.0	–	8.0	
2 1/2"	6.0	–	9.0	
3"	7.0	–	10.0	
4"	7.5	*	12.0	
5"	–	–	13.0	
6"	9.0	*	14.0	
8"	9.5	*	16.0	
10"	10.0	*	18.0	
12"	11.5	*	19.0	
14"	–	*	–	
16"	–	*	–	

* Maximum support spacing of 20 Ft. Provide a minimum of 1 hanger as close as practical to the joint behind the bell, and at changes of direction and branch connections.

** Unless shown or noted otherwise

PIPING NOTES

1. Pipe type shall be Sch 80 PVC unless noted otherwise
2. Refer to Pool Mechanical Sheets for pipe types beyond the building
3. Pipe sizes are identified in inches on the drawings
4. Pipe connection hardware shall be S.S. within Pool Mechanical Room
5. Contractor shall provide and install uniflanges/unions as req'd
6. Sch 80 PVC fittings may be solvent weld or flanged at Contractor's option
7. All piping and fittings at equipment (filters, pumps, valves, etc.) shall be flanged
   ~ PVC flanges at fittings shall be male type as shown
8. Refer to Maximum Pipe Support Spacing Schedule for frequency and spacing of pipe supports
   ~ At minimum, Contractor shall support piping as indicated on schedule which may require more supports than indicated on drawings
9. All hardware shall be S.S.
10. Provide air release valve at all high loops in piping
11. Provide drain valve at all low points in piping

waters edge AQUATIC DESIGN
11205 W. 79th St.
Lenexa, KS 66214
t. 913.438.4338
www.WeDesignPools.com
Oklahoma STATE CERTIFICATE OF AUTHORITY #3893

NORMAN, OKLAHOMA
Westwood Family Aquatic Center

Seal:

Jeff Bartley–ENGINEER
LICENSE #20290

Date: 08-03-16	Job #: 16-502
Drawn: CJB	Checked: DWS
Issue: DD SUBMITTAL SET	

FILTER AREA PLAN

SP–F1

Waters Edge Aquatic Design © 2016

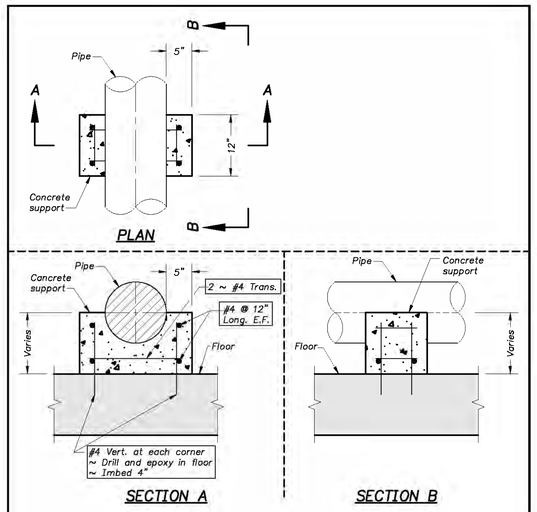

A PIPE SUPPORT – CONCRETE DETAIL
Scale: 1"=1'-0"

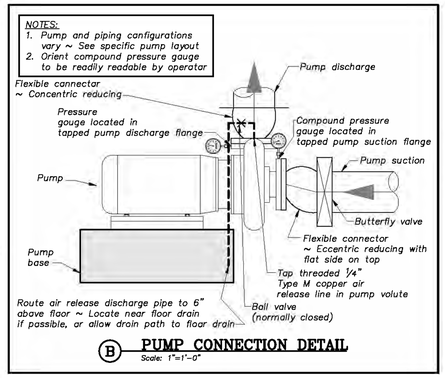

B PUMP CONNECTION DETAIL
Scale: 1"=1'-0"

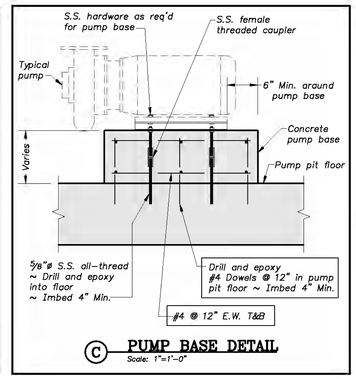

C PUMP BASE DETAIL
Scale: 1"=1'-0"

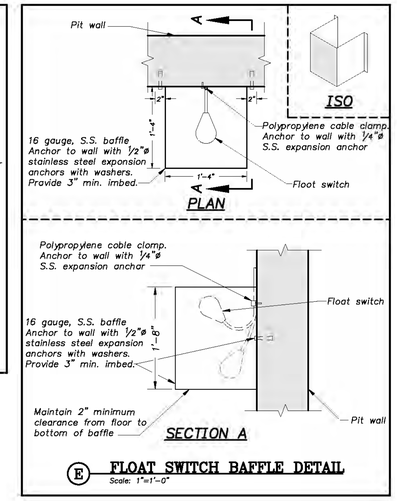

E FLOAT SWITCH BAFFLE DETAIL
Scale: 1"=1'-0"

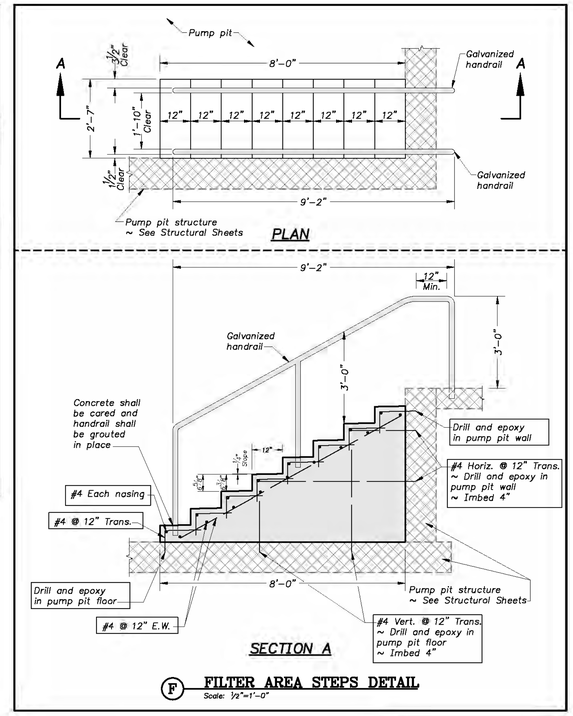

F FILTER AREA STEPS DETAIL
Scale: 1/2"=1'-0"

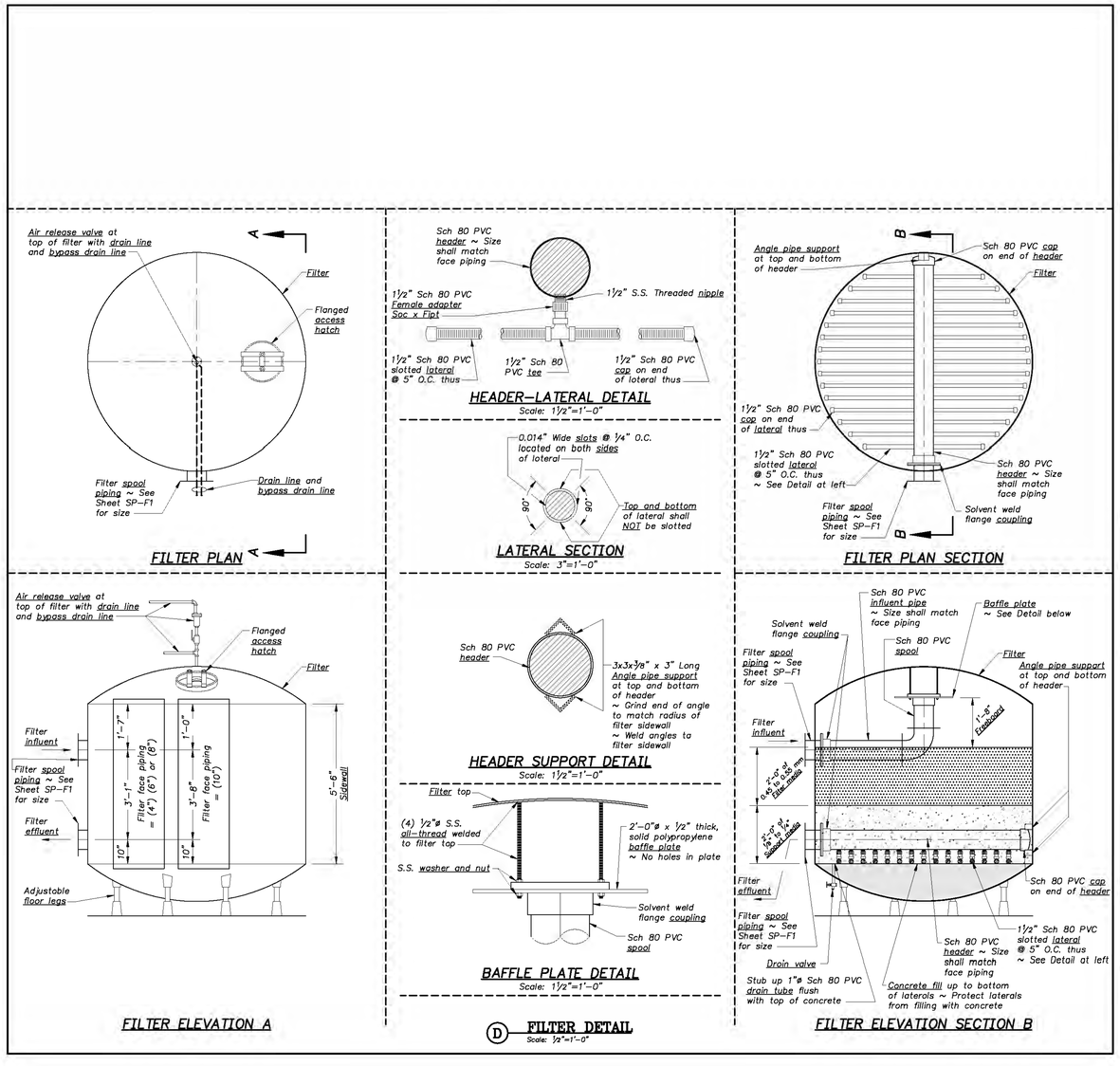

D FILTER DETAIL
Scale: 1/2"=1'-0"

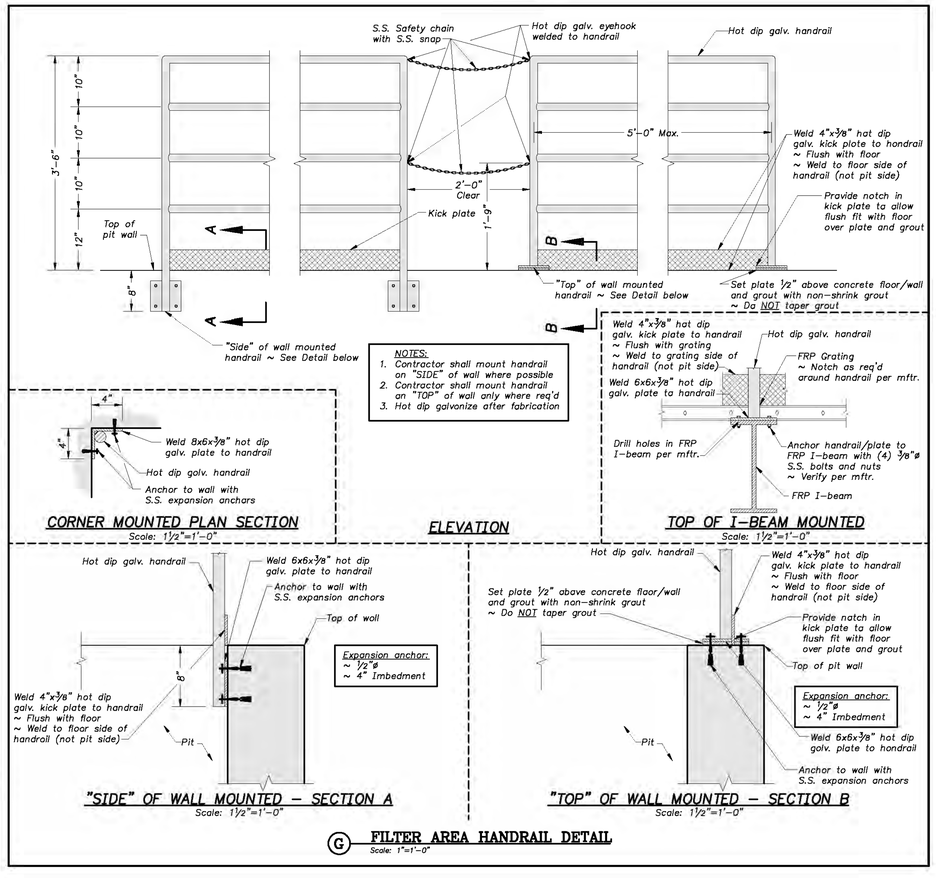

G FILTER AREA HANDRAIL DETAIL
Scale: 1"=1'-0"

waters edge AQUATIC DESIGN
11205 W. 79th St.
Lenexa, KS 66214
t. 913.438.4338
www.WeDesignPools.com
Oklahoma STATE CERTIFICATE OF AUTHORITY #3893.3

NORMAN, OKLAHOMA
Westwood Family Aquatic Center

Seal:

Jeff Bartley-ENGINEER LICENSE #20290

Date: 06-03-16	Job #: 16-502
Drawn: CJB	Checked: DWG
Issue: DD SUBMITTAL SET	

FILTER AREA DETAILS

SP-F5

Water's Edge Aquatic Design © 2016

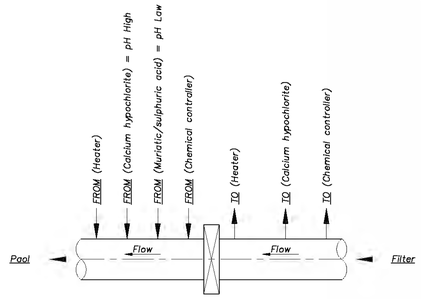

(H) CHEMICAL FEED SEQUENCE DETAIL
N.T.S.

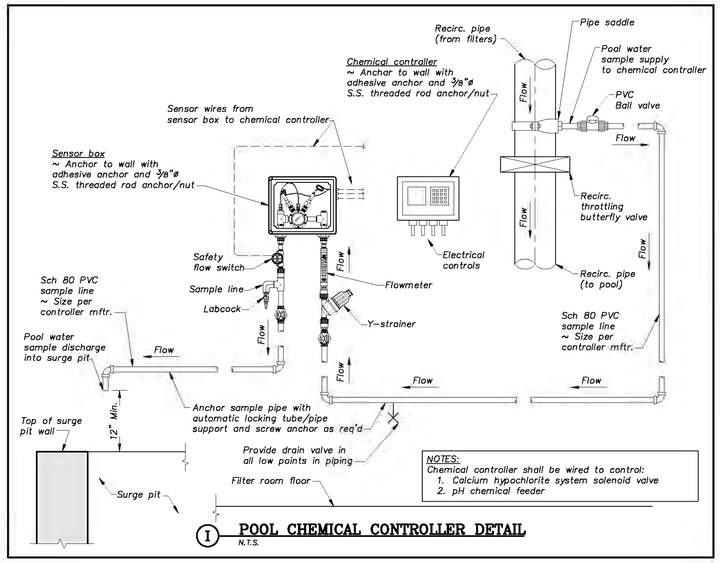

NOTES:
Chemical controller shall be wired to control:
1. Calcium hypochlorite system solenoid valve
2. pH chemical feeder

(I) POOL CHEMICAL CONTROLLER DETAIL
N.T.S.

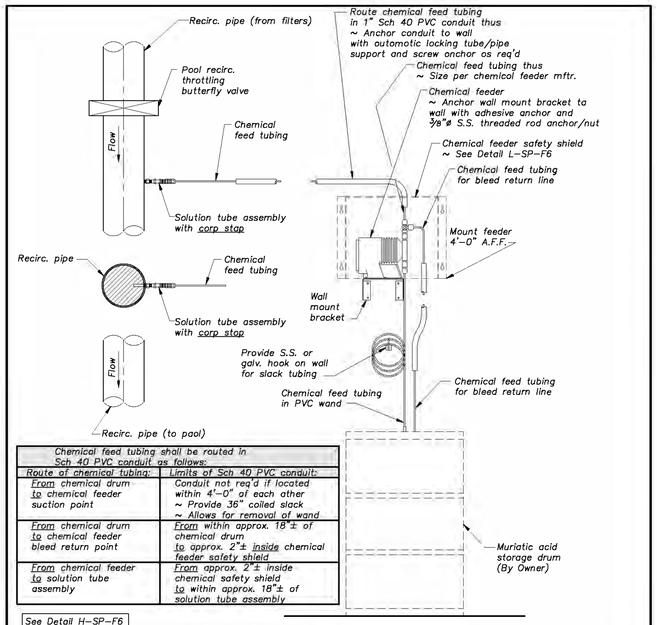

Chemical feed tubing shall be routed in Sch 40 PVC conduit as follows:	
Route of chemical tubing:	Limits of Sch 40 PVC conduit:
From chemical drum to chemical feeder suction point	Conduit not req'd if located within 4'-0" of each other ~ Provide 36" coiled slack ~ Allows for removal of wand
From chemical drum to chemical feeder bleed return point	From within approx. 18"± of chemical drum to approx. 2"± inside chemical feeder safety shield
From chemical feeder to solution tube assembly	From approx. 2"± inside chemical safety shield to within approx. 18"± of solution tube assembly

See Detail H-SP-F6 for chemical feed point sequence

(K) "MURIATIC ACID" FEED SYSTEM DETAIL
N.T.S.

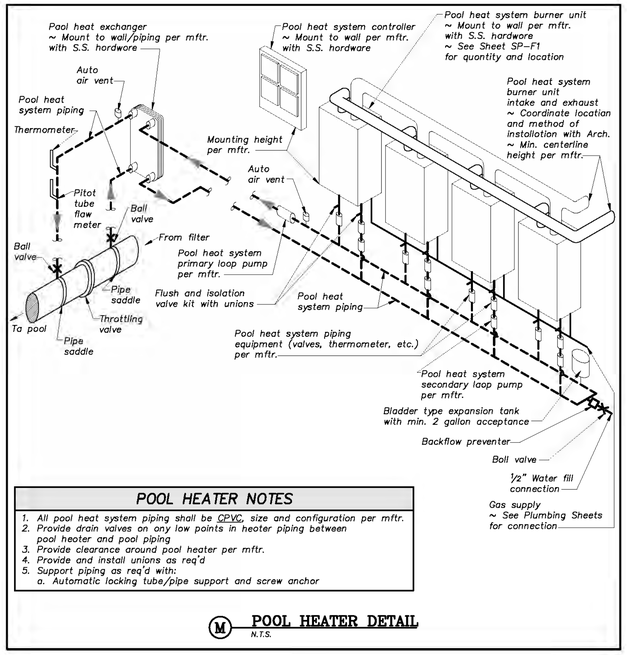

POOL HEATER NOTES
1. All pool heat system piping shall be CPVC, size and configuration per mftr.
2. Provide drain valves on any low points in heater piping between pool heater and pool piping
3. Provide clearance around pool heater per mftr.
4. Provide and install unions as req'd
5. Support piping as req'd with:
   a. Automatic locking tube/pipe support and screw anchor

(M) POOL HEATER DETAIL
N.T.S.

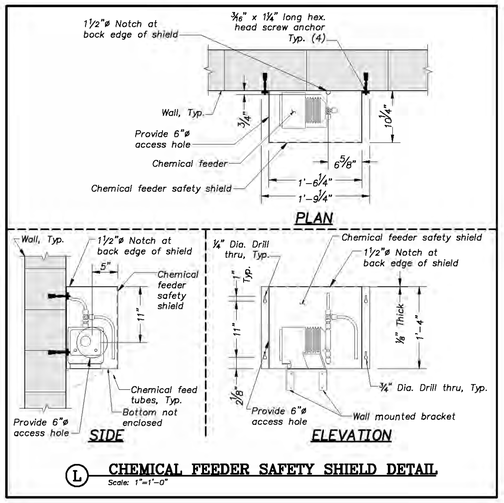

(L) CHEMICAL FEEDER SAFETY SHIELD DETAIL
Scale: 1"=1'-0"

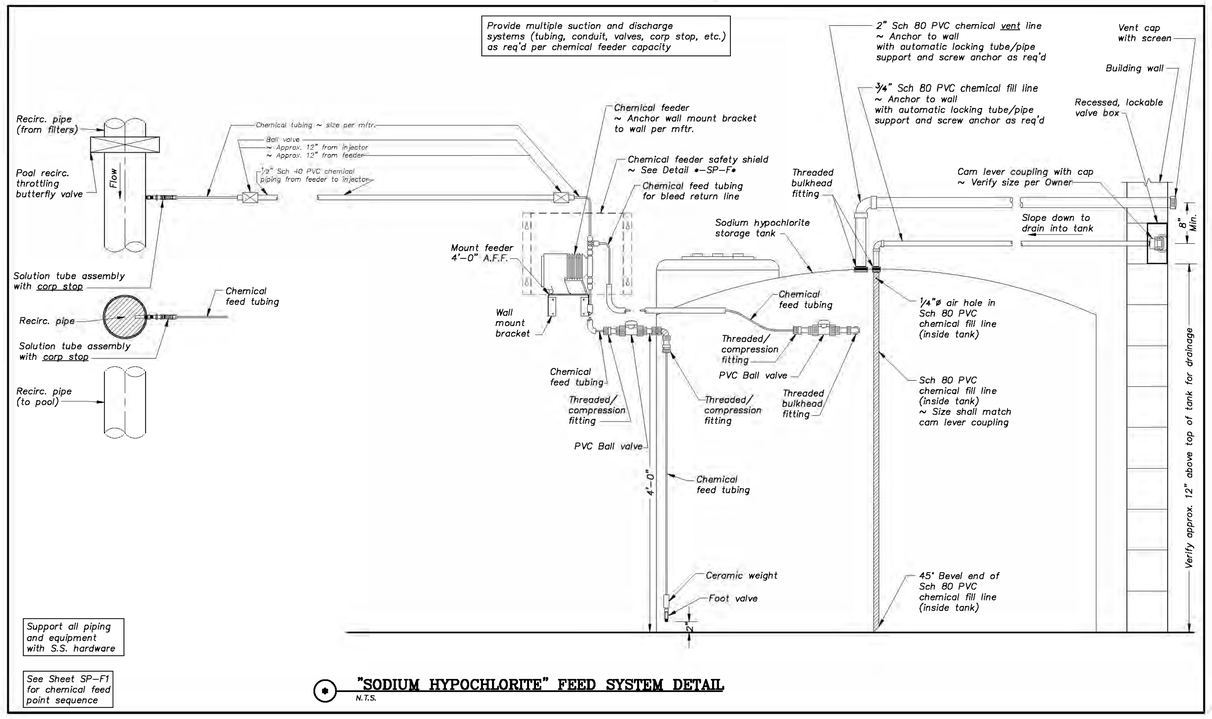

Support all piping and equipment with S.S. hardware

See Sheet SP-F1 for chemical feed point sequence

(*) "SODIUM HYPOCHLORITE" FEED SYSTEM DETAIL
N.T.S.

waters edge AQUATIC DESIGN
11205 W. 79th St.
Lenexa, KS 66214
t. 913.438.4338
www.WeDesignPools.com
Oklahoma STATE CERTIFICATE OF AUTHORITY # 3893.3

NORMAN, OKLAHOMA
Westwood Family Aquatic Center

Seal:

Jeff Bartley-ENGINEER
LICENSE #30290

Date: 06-03-16	Job #: 16-502
Drawn: CJB	Checked: DWS
Issue: DD SUBMITTAL SET	

FILTER AREA DETAILS

SP-F6

Water's Edge Aquatic Design © 2016

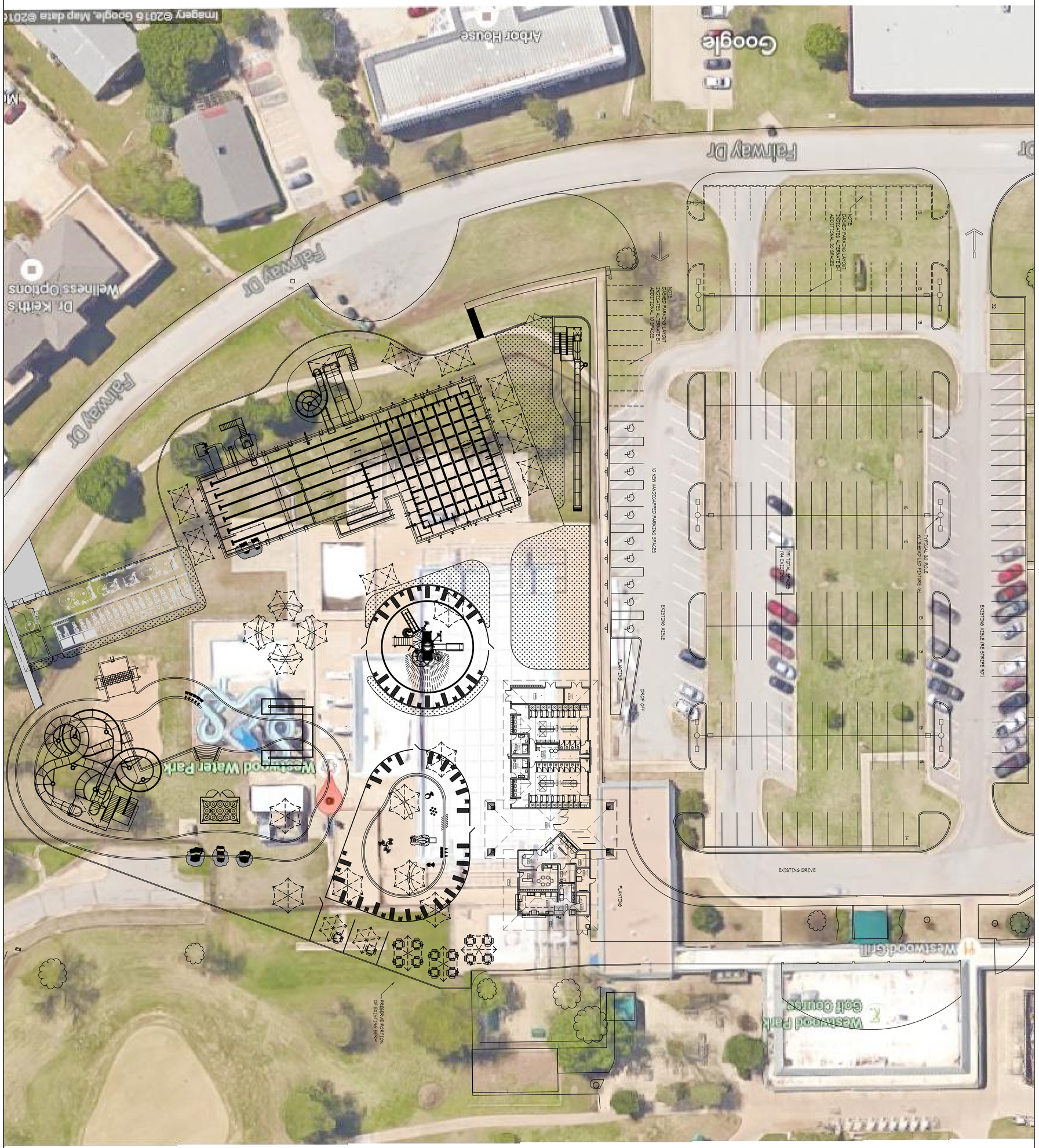

1 SITE PLAN
SCALE: 1" = 20'-0"

WESTWOOD FAMILY AQUATIC CENTER

2400 Westport Drive
Norman, OK

waters edge AQUATIC DESIGN
12205 W. 79th St.
Lenexa, KS 66214
t. 913.438.4338
www.WeDesignPools.com

THE MCKINNEY PARTNERSHIP architects
300 West Main
Suite 200
Norman, Oklahoma
73069
405.329.1400 p
405.364.8287 f
tmpartnr.com

Seal:

seal/signature must fit here, enclosed by text when complete

Date:	06/03/2016
Job #:	Kw07-4516
Drawn:	TMP
Checked:	TMP
Issue:	SITE PLAN

A1.0

Water's Edge Aquatic Design

Copyright © 2008 The McKinney Partnership Architects, P.C., All Rights Reserved

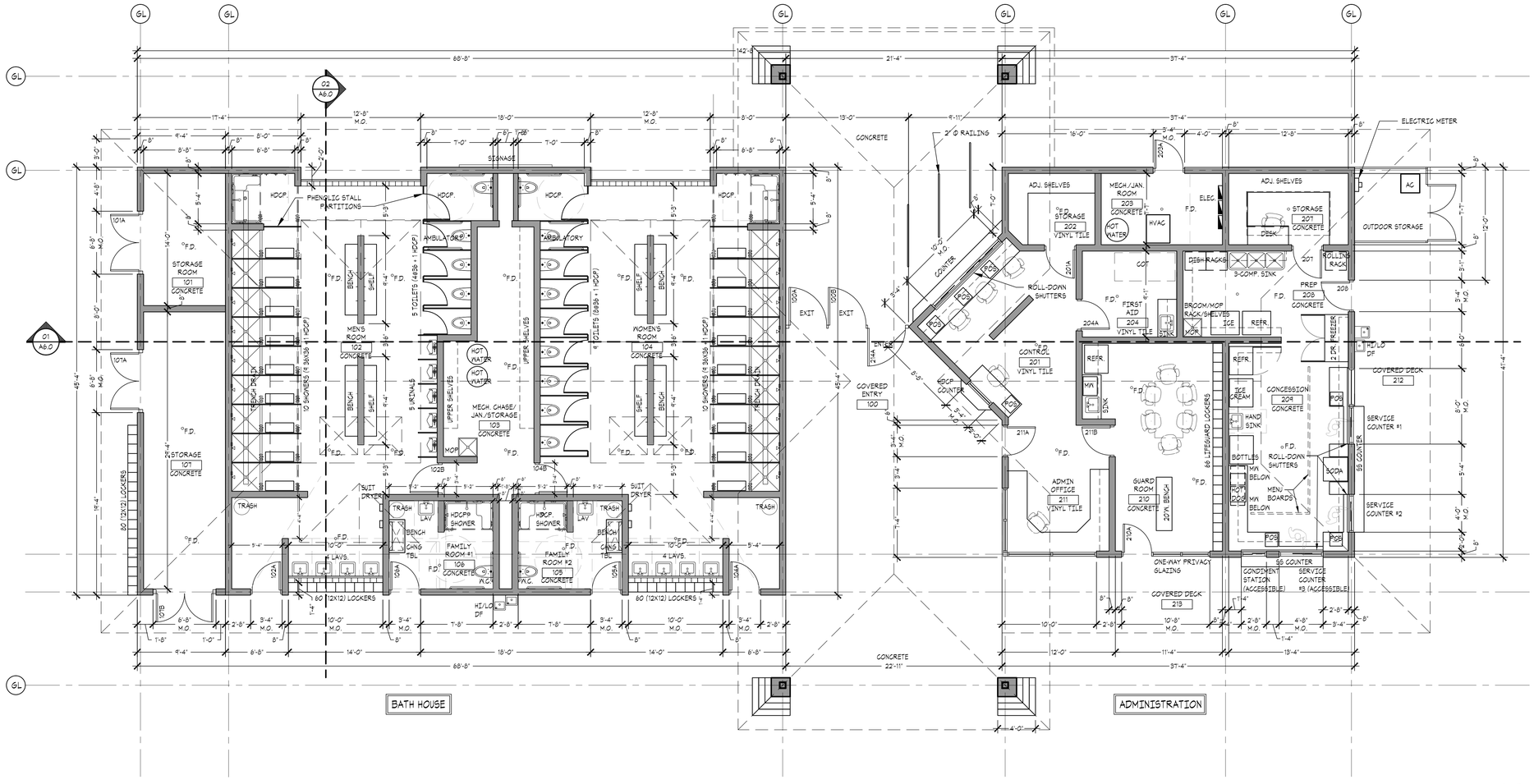

01 FLOOR PLAN
SCALE: 3/16" = 1'-0"

waters edge
AQUATIC DESIGN
11205 W. 79th St.
Lenexa, KS 66214
t. 913.438.4338
www.WeDesignPools.com

THE MCKINNEY PARTNERSHIP
ARCHITECTS
3600 West Main
Suite 200
Norman, Oklahoma
73072
405.360.1400 p
405.364.8287 f
tmparch.com

Copyright © 2008 The McKinney Partnership Architects, P.C., All Rights Reserved

WESTWOOD FAMILY AQUATIC CENTER

2400 Westport Drive
Norman, OK

Seal:

seal/signature must fit here... erase box and text when complete

Date: 06/03/2016	Job #: CM074516
Drawn: TMP	Checked: TMP
Issue:	

GROUND FLOOR PLAN

A2.0

Water's Edge Aquatic Design

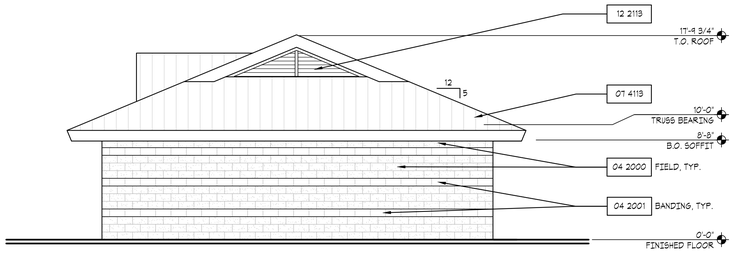

05 NORTHWEST ELEVATION
SCALE: 3/16" = 1'-0"

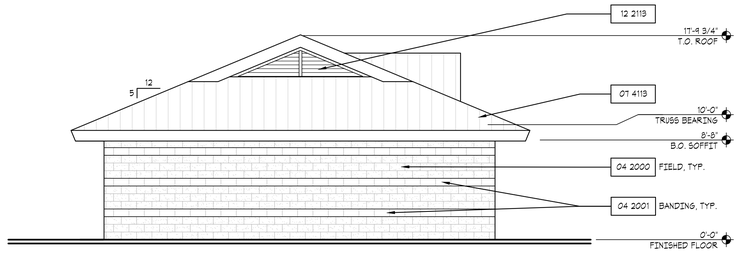

04 SOUTHEAST ELEVATION
SCALE: 3/16" = 1'-0"

KEYNOTES:	
04 2000	8"x8"x16" INTEGRALLY COLORED SPLIT FACE CMU
04 2001	8"x8"x16" INTEGRALLY COLORED GROUND FACE CMU
07 4113	24 GA. STANDING SEAM METAL ROOF, FASCIA AND TRIM
08 1113	HOLLOW METAL DOORS AND FRAMES
08 1613	FIBERGLASS DOORS AND FRAMES
12 2113	PREFINISHED, OPERABLE LOUVER, GABLE VENT W/ INSECT SCREEN

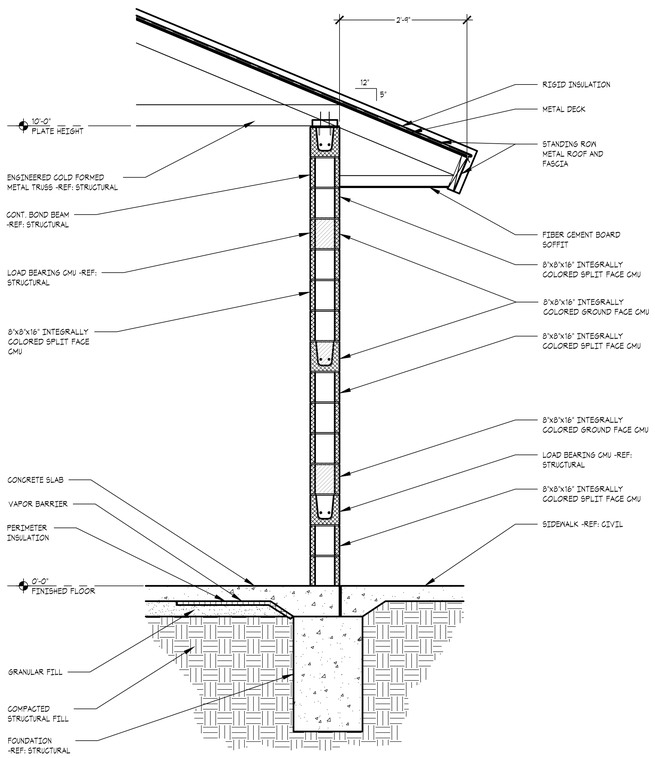

07 WALL SECTION
SCALE: 3/4" = 1'-0"

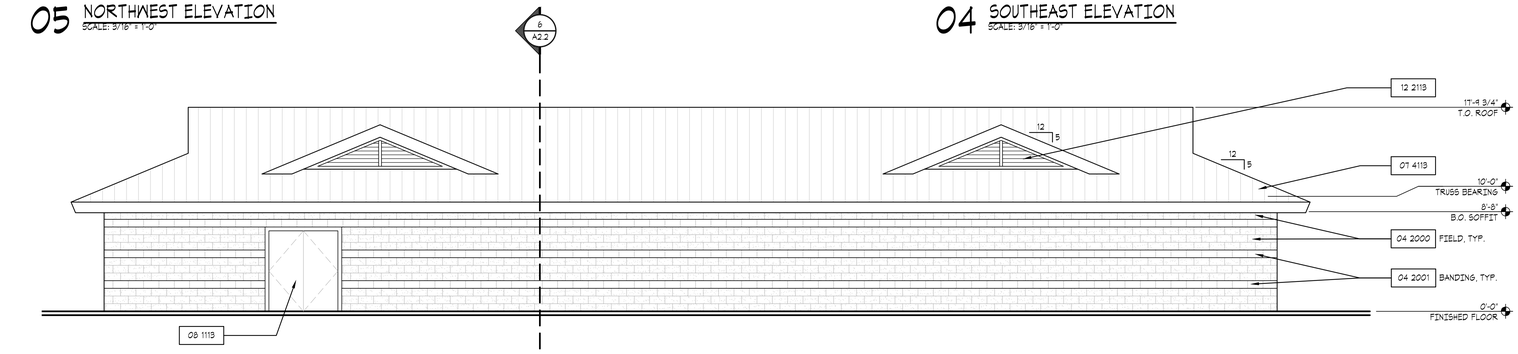

03 NORTHEAST ELEVATION
SCALE: 3/16" = 1'-0"

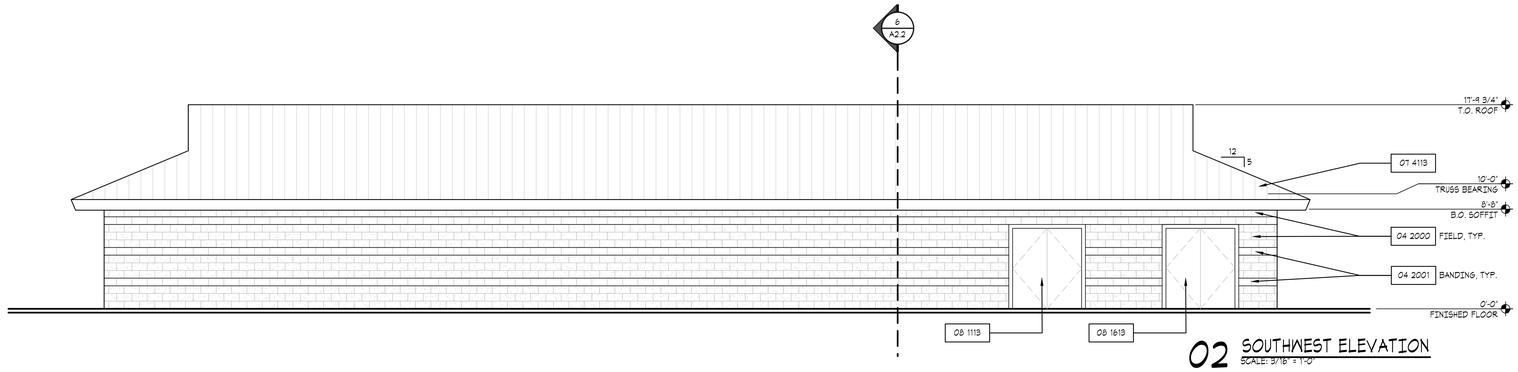

02 SOUTHWEST ELEVATION
SCALE: 3/16" = 1'-0"

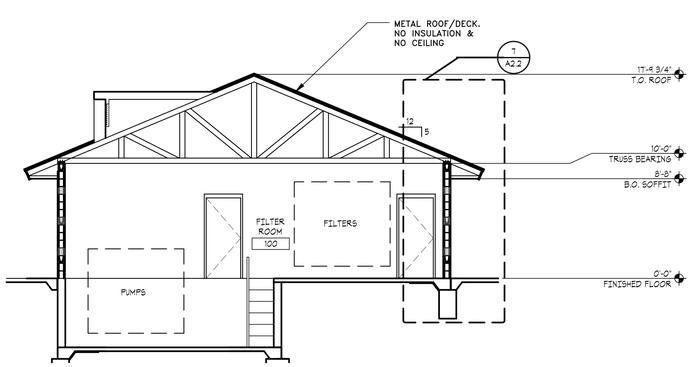

06 BUILDING SECTION
SCALE: 3/16" = 1'-0"

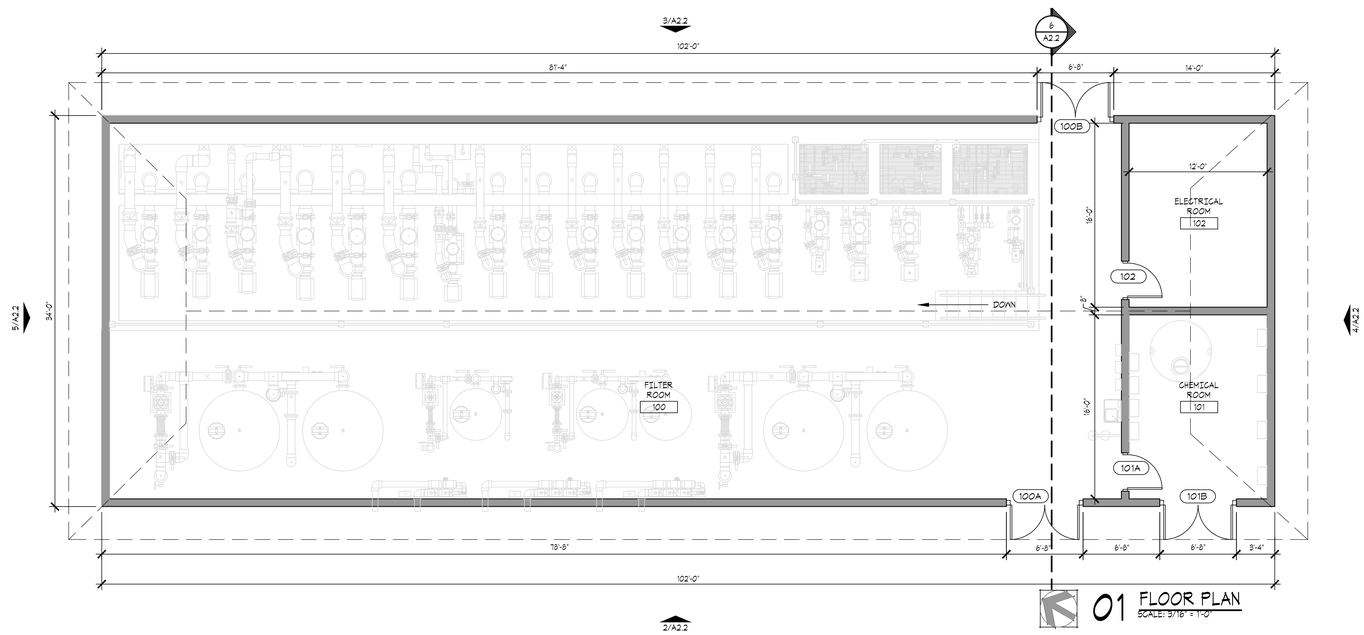

01 FLOOR PLAN
SCALE: 3/16" = 1'-0"

waters edge
AQUATIC DESIGN
11205 W. 79th St.
Lenexa, KS 66214
t. 913.438.4338
www.WeDesignPools.com

THE MCKINNEY PARTNERSHIP
A R C H I T E C T S
3600 West Main
Suite 200
Norman, Oklahoma
73072
405.360.1400 p
405.364.8287 f
tmparch.com

Copyright © 2016 The McKinney Partnership Architects, P.C. All Rights Reserved

WESTWOOD FAMILY AQUATIC CENTER

2400 Westport Drive
Norman, OK

Seal:

seal/signature must fit here... erase box and text when complete

Date: 06/03/2016	Job #: CM074516
Drawn: TMP	Checked: TMP
Issue:	

FILTER BUILDING FLOOR PLAN, ELEVATIONS, SECTION

A2.2

Water's Edge Aquatic Design

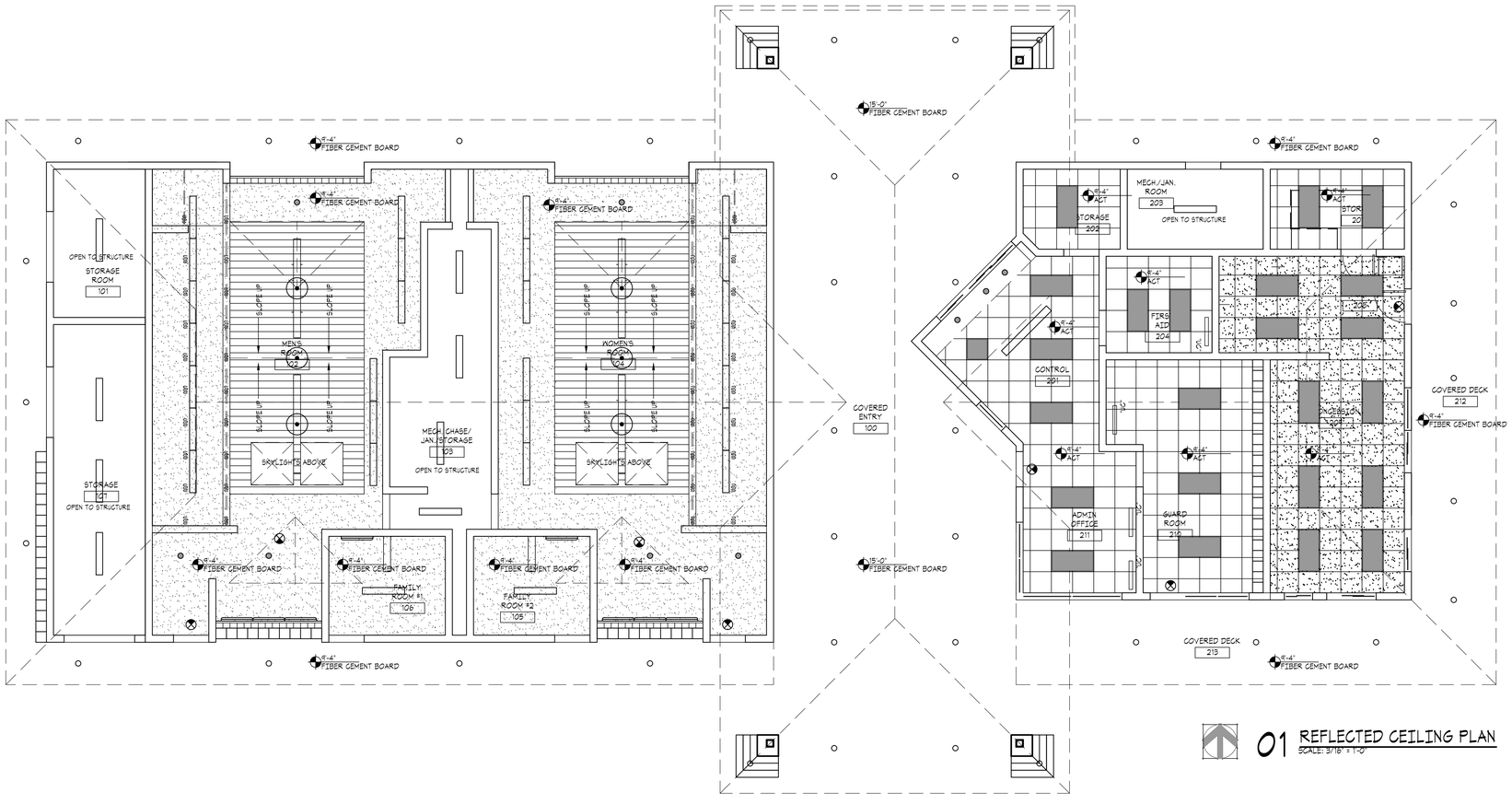

01 REFLECTED CEILING PLAN
SCALE: 3/16" = 1'-0"

REFLECTED CEILING PLAN LEGEND

- RECESSED FIXTURE — 4" RECESSED LED CAN LIGHT
- 2 X 2 TEGULAR EDGE SUSPENDED CEILING AND GRID — SUSP. TEGULAR CEILING w/15/16" WHITE GRID
- 2 X 4 TEGULAR EDGE SUSPENDED CEILING AND GRID — SUSP. TEGULAR CEILING w/15/16" WHITE GRID
- 2 X 2 VINYL COVERED CEILING TILES
- SURFACE MOUNT LINEAR LED STRIP
- SUSPENDED HIGH BAY FIXTURE
- EXTERIOR SOFFIT LIGHT — 6" EXTERIOR RECESSED LED CAN FIXTURE
- RECESSED 2 X 2 LED
- RECESSED 2 X 4 LED
- TOILET VANITY FIXTURE — TOILET VANITY FIXTURE, LOCATED ABOVE MIRROR
- SURFACE MOUNT 2 LAMP LED — W/ WRAP AROUND DIFFUSER
- EXIT LIGHT — EXIT LIGHT, EDGE LIT
- "UC" UNDER CABINET LIGHT FIXTURE — STRIP LIGHT FIXTURES UNDER UPPER CABINETS AS SHOWN
- ACCESS PANEL — PAINT ACCESS PANELS TO MATCH ADJACENT CLG.
- LIGHT FIXTURE SWITCH. REFER RCP FOR SWITCH LOCATIONS & FIXTURE WIRING
- D DIMMER SWITCH: ALL LIGHT SWITCHES TO BE ON DIMMER SWITCHES
- EM EMERGENCY LIGHTING: LIGHT ON BACK UP SYSTEM & SHALL BE INSTALLED ON A SEPARATE CIRCUIT
- OS OCCUPANCY SENSOR: LIGHT SWITCH WITH O.S. DEVICE

GENERAL NOTES

1. ALL ELEMENTS IN CEILING TO BE CENTERED IN CEILING OR ALIGN. ELEMENTS ARE TO BE EQUALLY SPACED AND BE SYMMETRICAL IN A ROOM AS MUCH AS POSSIBLE. SUPPLY AIR & DIFFUSERS WILL NEED TO BE COORDINATED WITH CEILING PLAN TO AVOID CONFLICTS WITH LIGHT FIXTURE PLACEMENT.
2. PROVIDE ALL REQUIRED ACCESSORIES TO FINISH THE APPLICATION / INSTALLATION COMPLETE.
3. REFER ELECTRICAL FOR ALL LIGHTING AND DESIGNATIONS AND TYPES. ARCHITECTURAL PLANS ILLUSTRATE LAYOUT AND ALIGNMENT.
4. VERIFY ALL LIGHTING ROUGH-INS WITH OWNER PRIOR TO DRYWALL INSTALLATION.
5. THE ARCHITECTURAL DRAWINGS TAKE PRECEDENCE OVER THE ENGINEERING PLANS FOR THE LOCATION OF ALL ITEMS. NOTIFY ARCHITECT OF ANY DISCREPANCIES IMMEDIATELY.
6. EMERGENCY LIGHTING SHALL BE INSTALLED ON A SEPARATE CIRCUIT.
7. PAINT ALL DIFFUSERS AND RETURNS IN CEILING TO MATCH ADJACENT CEILING.
8. THE GENERAL CONTRACTOR SHALL PROVIDE FLUSH MOUNTED ACCESS DOORS AS NECESSARY PER CODE FOR ACCESS TO ELECTRICAL AND MECHANICAL EQUIPMENT. IF NOT SPECIFICALLY NOTED ON THE CEILING PLAN, CONFIRM THE PROPOSED LOCATION WITH THE ARCHITECT.
9. ALL EQUIPMENT SHALL BEAR UL LABELS
10. TELEPHONE, DATA, SECURITY & FIRE PER OWNER DIRECTION.

waters edge AQUATIC DESIGN
11205 W. 79th St.
Lenexa, KS 66214
t. 913.438.4338
www.WeDesignPools.com

THE MCKINNEY PARTNERSHIP
ARCHITECTS
3600 West Main
Suite 200
Norman, Oklahoma
73072
405.360.1400 p
405.364.8287 f
tmparch.com

Copyright © 2008 The McKinney Partnership Architects, P.C., All Rights Reserved

WESTWOOD FAMILY AQUATIC CENTER

2400 Westport Drive
Norman, OK

Seal:

seal/signature must fit here... erase box and text when complete

Date: 06/03/2016	Job #: CM074516
Drawn: TMP	Checked: TMP

Issue:

REFLECTED CEILING PLAN

A3.0

Water's Edge Aquatic Design

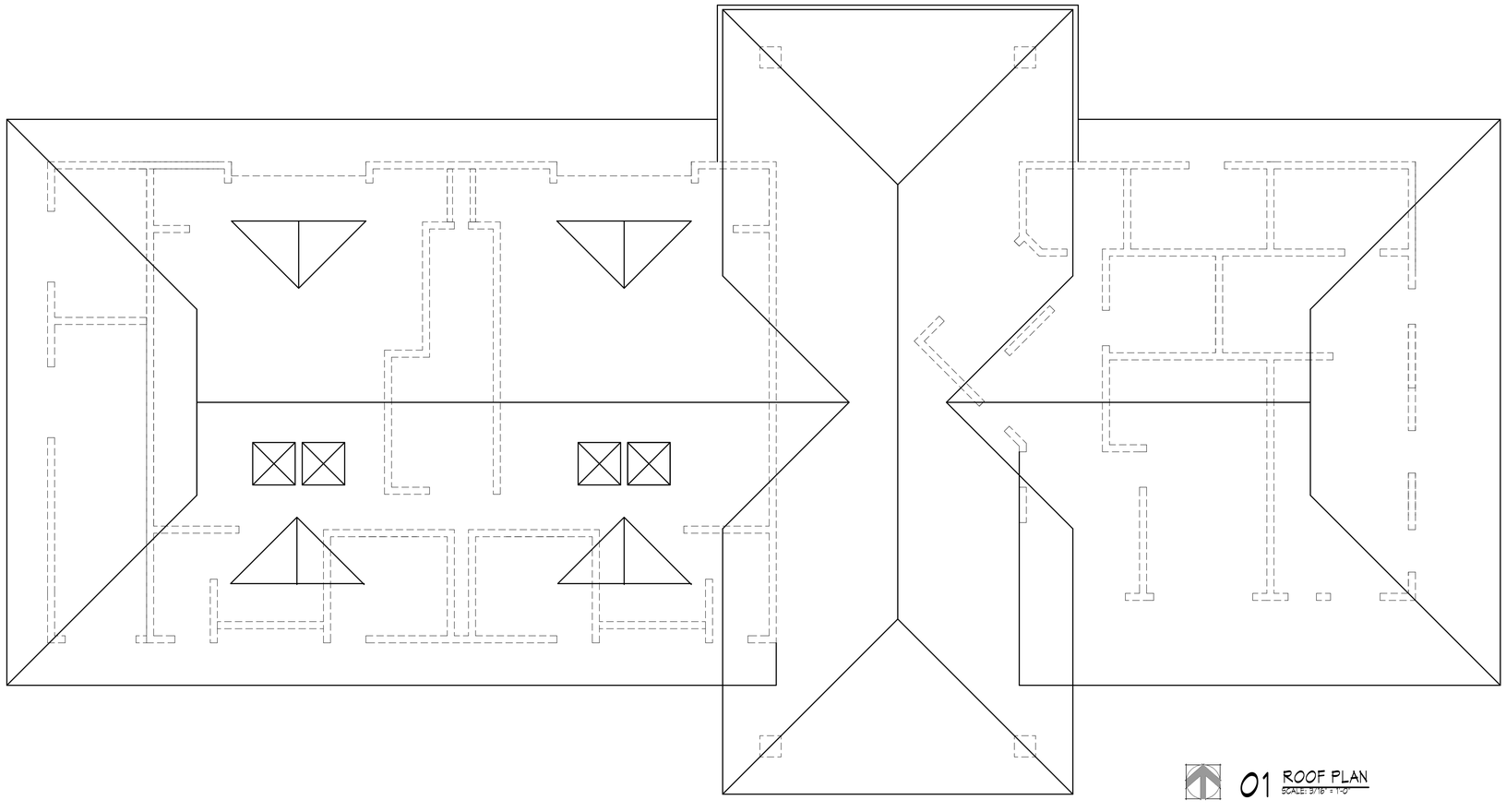

01 ROOF PLAN
SCALE: 3/16" = 1'-0"

waters edge
AQUATIC DESIGN

11205 W. 79th St.
Lenexa, KS 66214

t. 913.438.4338
www.WeDesignPools.com

THE MCKINNEY PARTNERSHIP
ARCHITECTS

3600 West Main
Suite 200
Norman, Oklahoma
73072
405.360.1400 p
405.364.8287 f
tmparch.com

Copyright © 2008 The McKinney Partnership Architects, P.C., All Rights Reserved

WESTWOOD FAMILY AQUATIC CENTER

2400 Westport Drive
Norman, OK

Seal:

seal/signature must fit here... erase box and text when complete

Date: 06/03/2016	Job #: CM074516
Drawn: TMP	Checked: TMP
Issue:	

ROOF PLAN

A4.0

Water's Edge Aquatic Design

KEYNOTES:

04 2000	8"x8"x16" INTEGRALLY COLORED SPLIT FACE CMU	08 5659	CONCESSION WINDOWS
04 2001	8"x8"x16" INTEGRALLY COLORED GROUND FACE CMU	08 6200	(2) 4'-0" TINTED, INSULATED GLAZING, FLAT SKY LIGHT
04 2300	8"x8"x4" TINTED, SMOOTH, TWO-SIDES SATIN FINISH GLASS BLOCK	10 1400	ALUMINUM BACK-LIT CHANNEL LETTERS
05 1200	STRUCTURAL STEEL TUBE COLUMN - PAINT FINISH	10 5129	WALL-MOUNTED SIX-TIER PHENOLIC LOCKERS
05 7311	PREFINISHED RAILING	12 2113	PREFINISHED, OPERABLE LOUVER, GABLE VENT W/ INSECT SCREEN
07 4113	24 GA. STANDING SEAM METAL ROOF, FASCIA AND TRIM	12 2114	PREFINISHED, OPERABLE LOUVER, WALL VENT W/ INSECT SCREEN
07 7123	PREFINISHED GUTTERS AND DOWNSPOUTS	12 3600	STAINLESS STEEL CONCESSION COUNTER
08 1113	HOLLOW METAL DOORS AND FRAMES	22 4000	HI/LO WALL MOUNTED EXTERIOR DRINKING FOUNTAINS
08 1116	ALUMINUM DOORS AND FRAMES	32 3120	'T' STEEL GATES W/ PANIC HARDWARE
08 4313	TINTED, FIXED, INSULATING GLAZING IN ALUMINUM FRAMES		

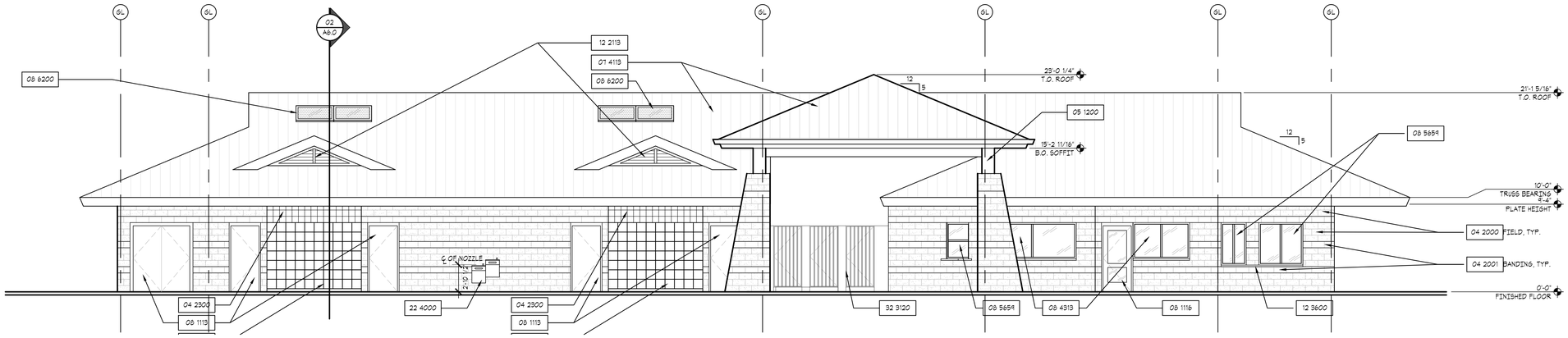

04 SOUTH ELEVATION - BACK
SCALE: 3/16" = 1'-0"

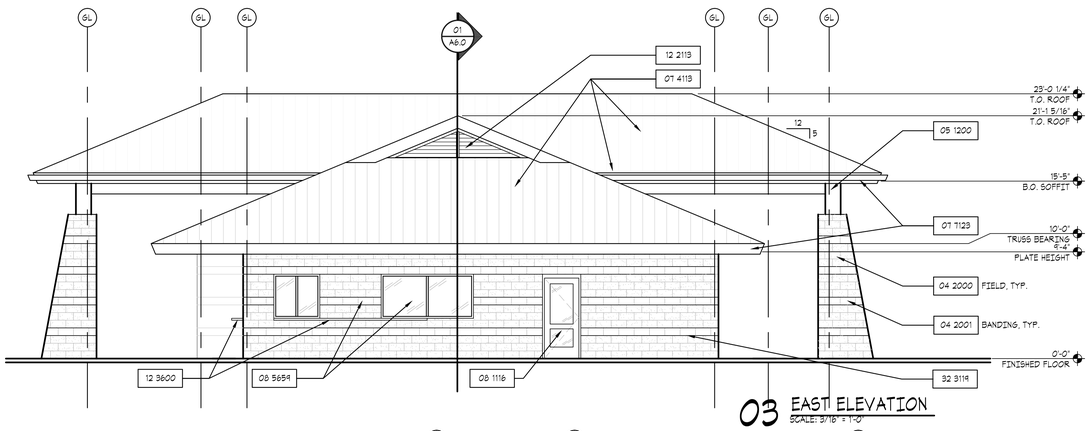

03 EAST ELEVATION
SCALE: 3/16" = 1'-0"

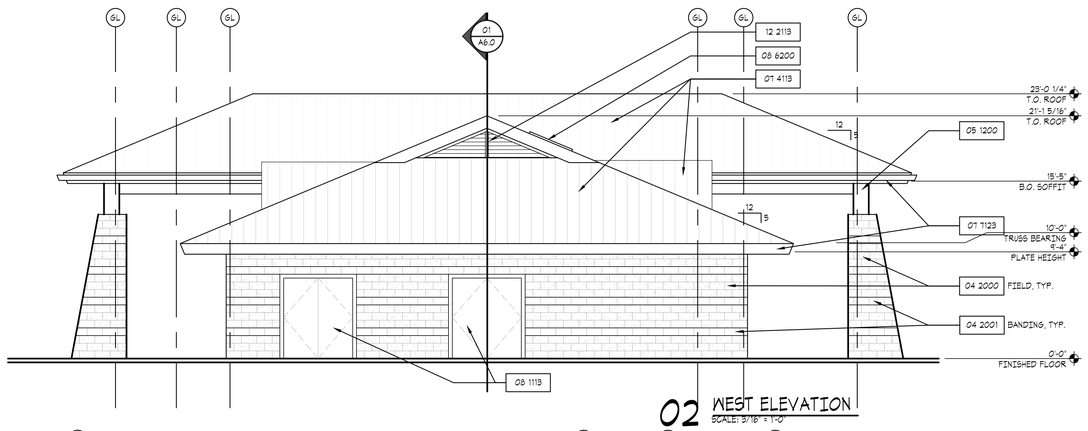

02 WEST ELEVATION
SCALE: 3/16" = 1'-0"

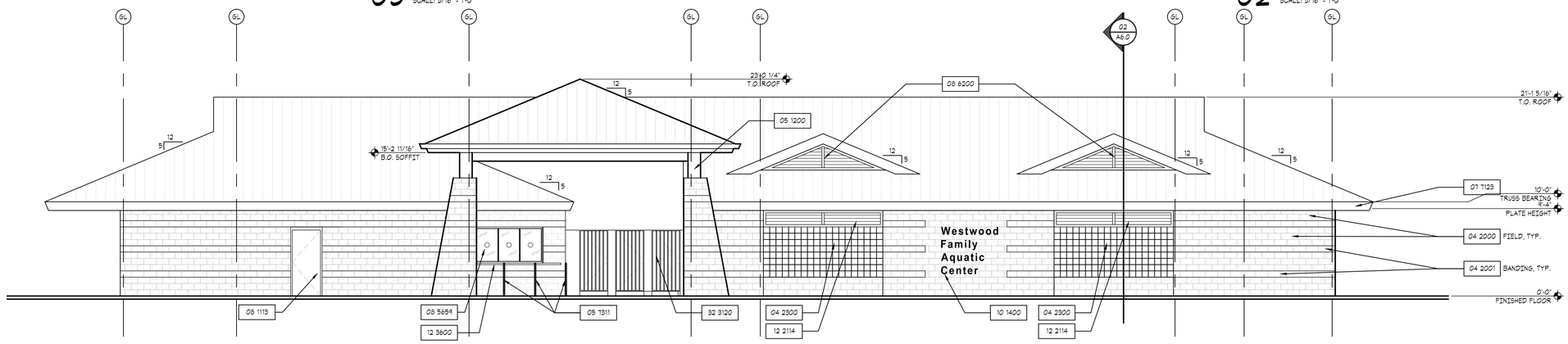

01 NORTH ELEVATION - FRONT
SCALE: 3/16" = 1'-0"

waters edge AQUATIC DESIGN
11205 W. 79th St.
Lenexa, KS 66214
t. 913.438.4338
www.WeDesignPools.com

THE MCKINNEY PARTNERSHIP
ARCHITECTS
3600 West Main
Suite 200
Norman, Oklahoma
73072
405.360.1400 p
405.364.8287 f
tmparch.com

Copyright © 2008 The McKinney Partnership Architects, P.C. All Rights Reserved

WESTWOOD FAMILY AQUATIC CENTER
2400 Westport Drive
Norman, OK

Seal:
seal/signature must fit here... erase box and text when complete

Date: 06/03/2016	Job #: CM074516
Drawn: TMP	Checked: TMP
Issue:	

EXTERIOR ELEVATIONS

A5.0

Water's Edge Aquatic Design

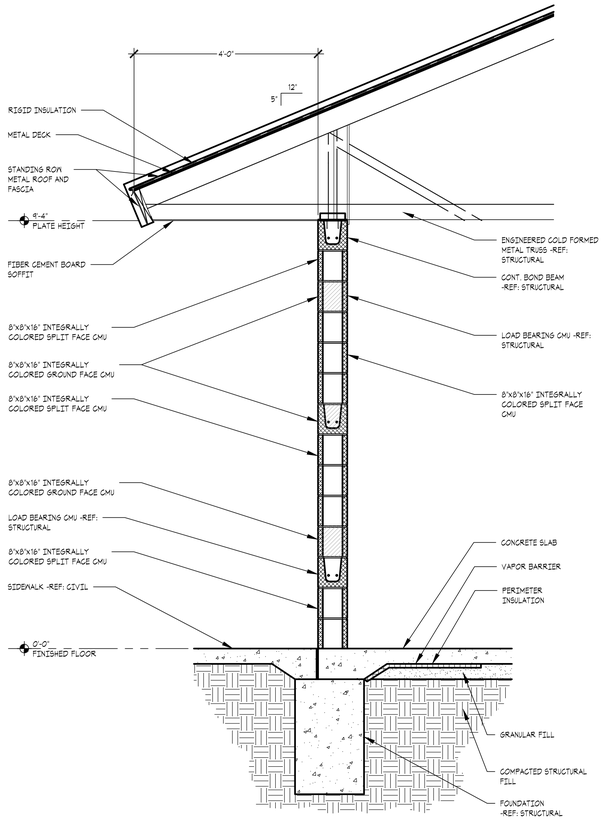

04 WALL SECTION
SCALE: 3/4" = 1'-0"

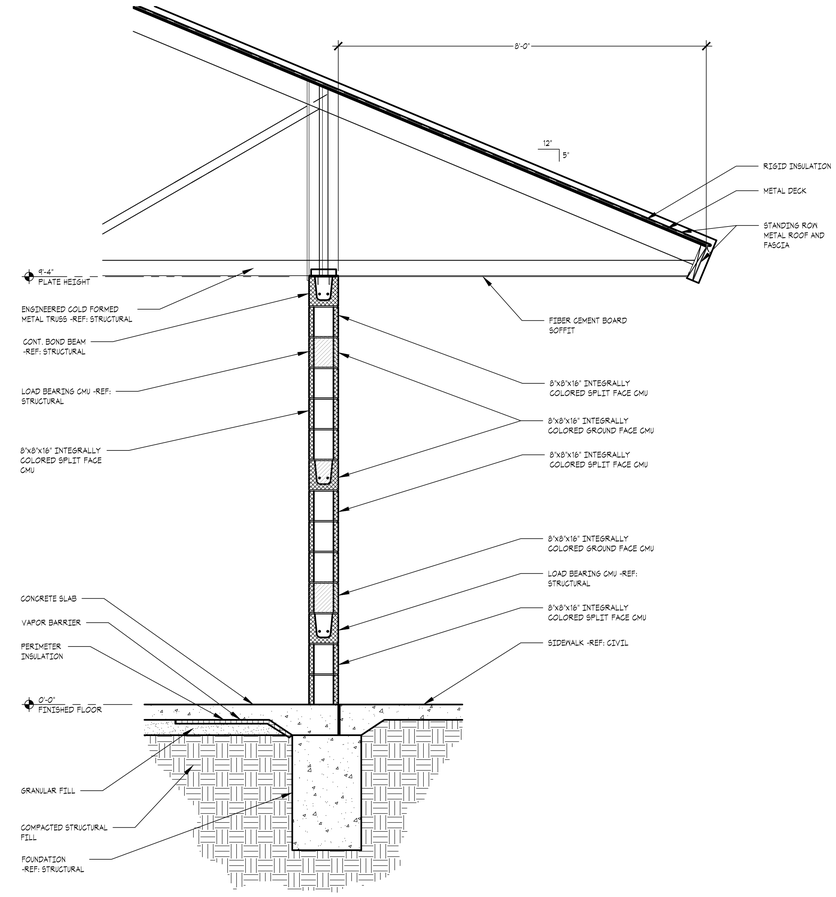

03 WALL SECTION
SCALE: 3/4" = 1'-0"

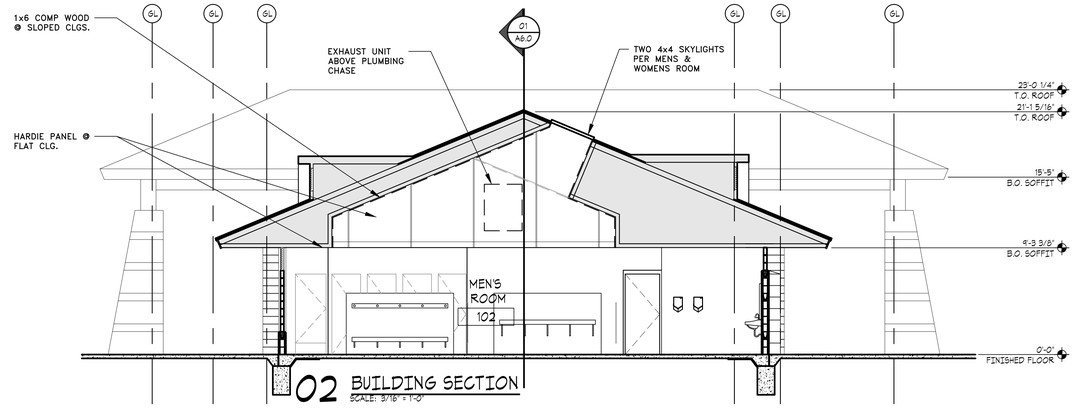

02 BUILDING SECTION
SCALE: 3/16" = 1'-0"

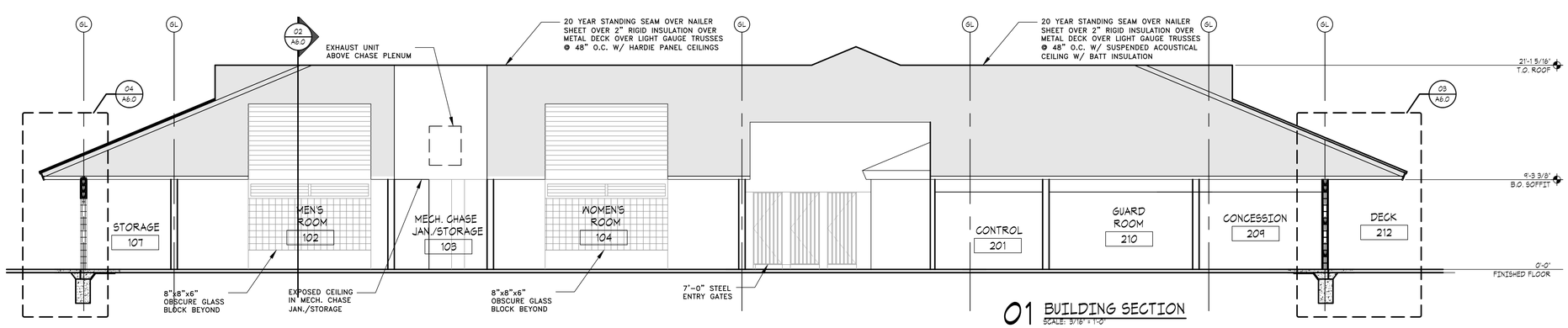

01 BUILDING SECTION
SCALE: 3/16" = 1'-0"

waters edge AQUATIC DESIGN
11205 W. 79th St.
Lenexa, KS 66214
t. 913.438.4338
www.WeDesignPools.com

THE MCKINNEY PARTNERSHIP
A R C H I T E C T S
3600 West Main
Suite 200
Norman, Oklahoma
73072
405.360.1400 p
405.364.8287 f
tmparch.com

Copyright © 2008 The McKinney Partnership Architects, P.C. - All Rights Reserved

WESTWOOD FAMILY AQUATIC CENTER
2400 Westport Drive
Norman, OK

Seal:
seal/signature must fit here... erase box and text when complete

Date: 06/03/2016	Job #: CM074516
Drawn: TMP	Checked: TMP
Issue:	

BUILDING SECTIONS

A6.0

Water's Edge Aquatic Design

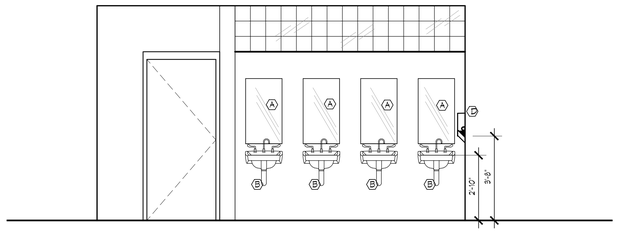

06 WOMENS SHOWERS
SCALE: 3/8" = 1'-0"

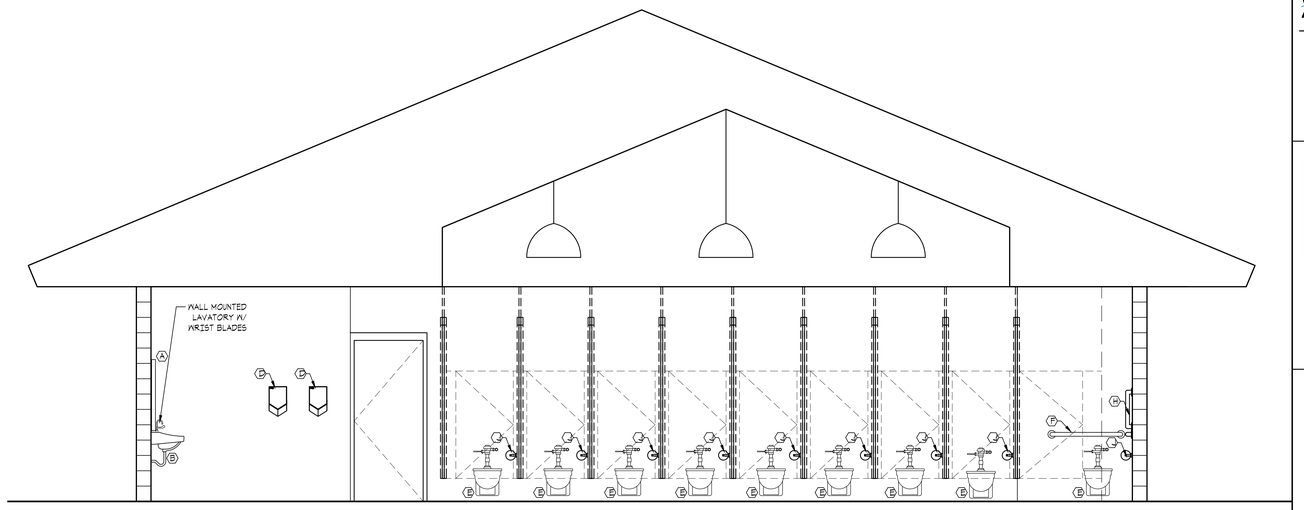

05 WOMENS SHOWERS
SCALE: 3/8" = 1'-0"

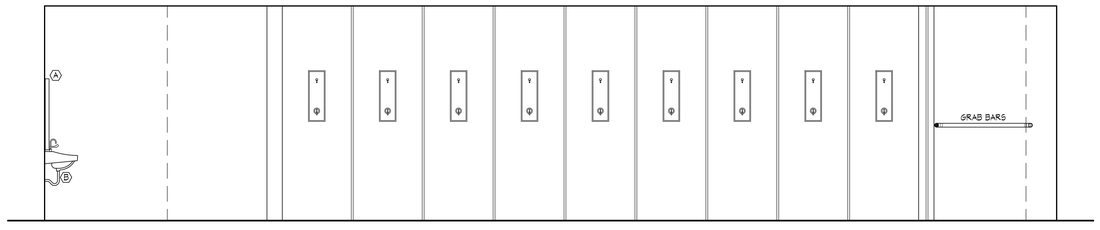

04 WOMENS SHOWERS
SCALE: 3/8" = 1'-0"

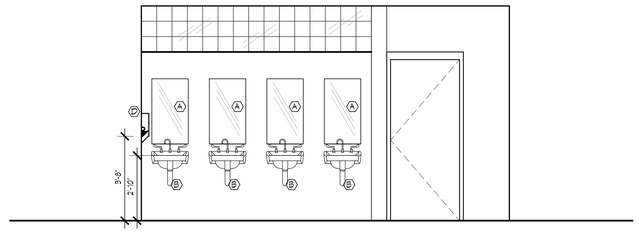

03 MENS SHOWERS
SCALE: 3/8" = 1'-0"

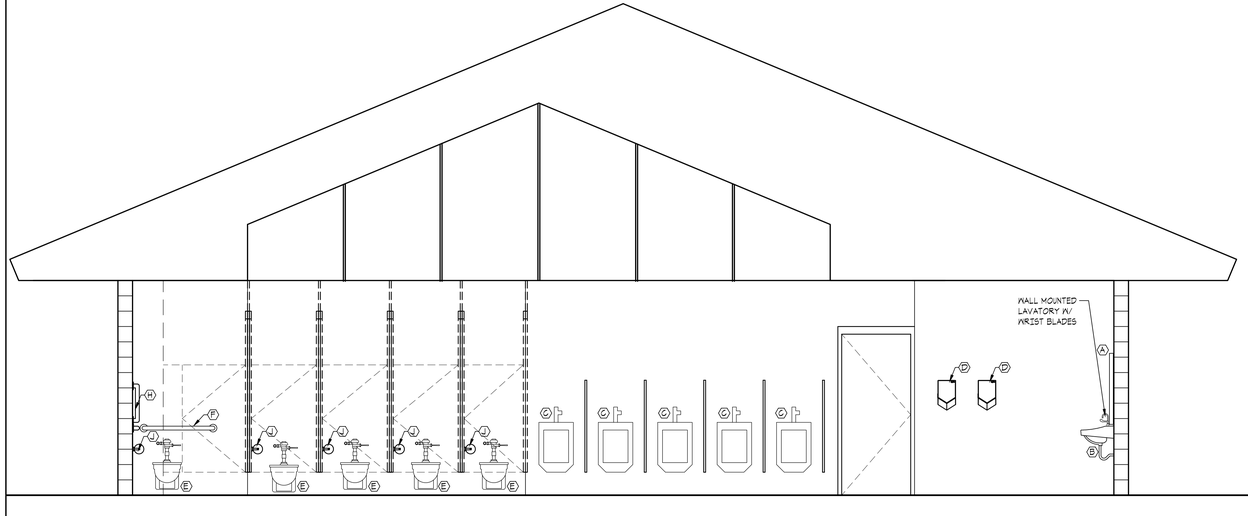

02 MENS SHOWERS
SCALE: 3/8" = 1'-0"

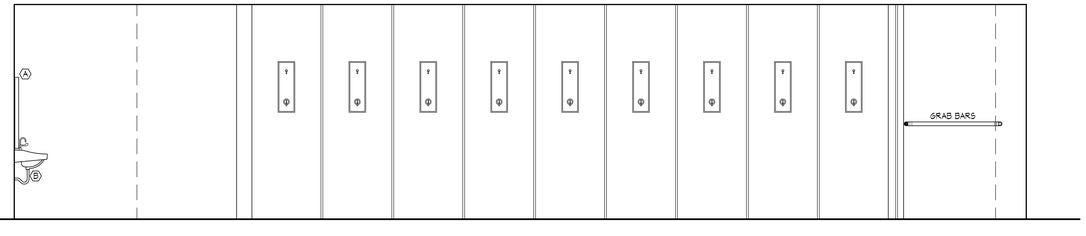

01 MENS SHOWERS
SCALE: 3/8" = 1'-0"

waters edge
AQUATIC DESIGN

11205 W. 79th St.
Lenexa, KS 66214

t. 913.438.4338
www.WeDesignPools.com

THE MCKINNEY PARTNERSHIP
A R C H I T E C T S

3600 West Main
Suite 200
Norman, Oklahoma
73072
405.360.1400 p
405.364.8287 f
tmparch.com

Copyright © 2008 The McKinney Partnership Architects, P.C., All Rights Reserved

WESTWOOD FAMILY AQUATIC CENTER

2400 Westport Drive
Norman, OK

Seal:

seal/signature must fit here... erase box and text when complete

Date: 06/03/2016	Job #: GM074516
Drawn: TMP	Checked: TMP

Issue:

INTERIOR ELEVATIONS

A7.0

Water's Edge Aquatic Design

6 VIEW LOOKING NORTH
SCALE: NTS

5 VIEW LOOKING SOUTH
SCALE: NTS

4 VIEW LOOKING N.E.
SCALE: NTS

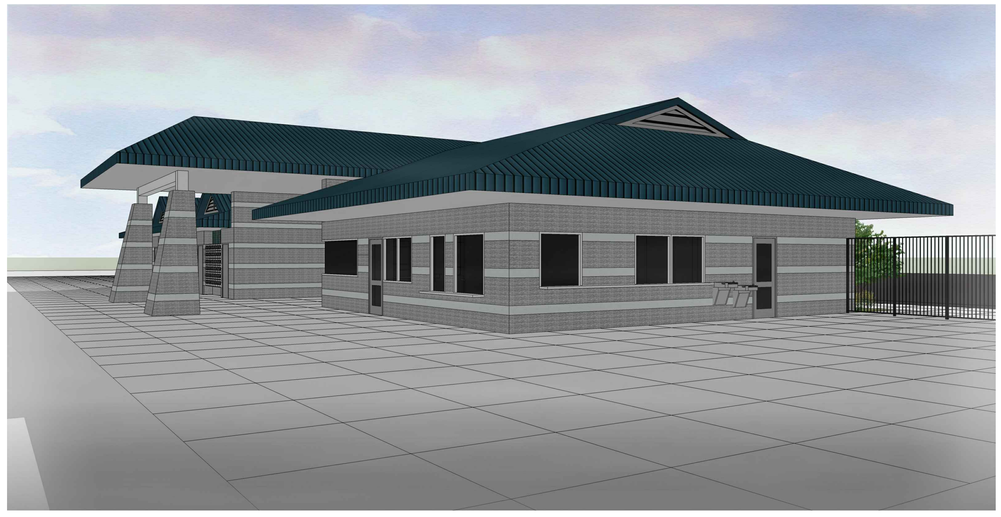

3 VIEW LOOKING N.W.
SCALE: NTS

2 VIEW LOOKING S.W.
SCALE: NTS

1 VIEW LOOKING S.E.
SCALE: NTS

waters edge
AQUATIC DESIGN
11205 W. 79th St.
Lenexa, KS 66214
t. 913.438.4338
www.WeDesignPools.com

THE MCKINNEY PARTNERSHIP
ARCHITECTS
3600 West Main
Suite 200
Norman, Oklahoma
73072
405.360.1400 p
405.364.8287 f
tmparch.com

Copyright © 2008 The McKinney Partnership Architects, P.C., All Rights Reserved

WESTWOOD FAMILY AQUATIC CENTER

2400 Westport Drive
Norman, OK

Seal:

seal/signature must fit here... erase box and text when complete

Date: 06/03/2016	Job #: CM074516
Drawn: TMP	Checked: TMP
Issue:	

PERSPECTIVES

A10.0

Water's Edge® Aquatic Design

GENERAL STRUCTURAL NOTES

1. GENERAL NOTES
   A. THE STRUCTURAL DRAWINGS ARE INTENDED TO BE USED CONCURRENTLY WITH THE ARCHITECTURAL DRAWINGS. IF ANY DISCREPANCY EXISTS BETWEEN THE STRUCTURAL DOCUMENTS AND THE ARCHITECTURAL DOCUMENTS, THE CONTRACTOR SHALL IMMEDIATELY NOTIFY THE ARCHITECT FOR CLARIFICATION BEFORE PROCEEDING WITH CONSTRUCTION.
   B. GENERAL NOTES ARE AN INTEGRAL PART OF THE CONSTRUCTION DOCUMENTS AND DESCRIBE CONDITIONS THAT APPLY GENERALLY THROUGHOUT THE STRUCTURAL DRAWINGS.
   C. THE STRUCTURE IS DESIGNED AS A STABLE UNIT AFTER ALL COMPONENT ARE IN PLACE. TEMPORARILY BRACE THE STRUCTURE FOR LATERAL STABILITY UNTIL ALL PERMANENT BRACING SYSTEMS ARE COMPLETE. THE CONTRACTOR SHALL PROVIDE ALL TEMPORARY SHORING AND BRACING NECESSARY TO ENSURE THE STABILITY OF ANY AND ALL PARTS OF THE BUILDING DURING CONSTRUCTION.

2. DESIGN CRITERIA
   A. DESIGN CODE: 2015 INTERNATIONAL BUILDING CODE
   B. DESIGN LIVE LOADS:
      - ROOF .... 20 PSF
      - FLOOR - BATH HOUSE .... 50 PSF
      - FLOOR - FILTER BUILDING .... 100 PSF
   C. LATERAL LOADS:
      - BASIC WIND SPEED .... 115 MPH
        - IMPORTANCE FACTOR (I) 1.00
        - EXPOSURE C
      - SEISMIC
        - SEISMIC USE GROUP ii
        - SEISMIC DESIGN CATEGORY .... B
        - SPECTRAL RESPONSE COEFFICIENTS .... S_{DS} = 0.286g, S_{D1} = 0.126g
        - SITE CLASS .... D
      - MAINTENANCE AND UTILITY BUILDINGS
        - RESPONSE FACTOR - MASONRY SHEAR WALLS 2.0
        - BASIC SEISMIC FORCE RESISTING SYSTEM: ORDINARY REINFORCED MASONRY SHEAR WALLS

3. GENERAL
   A. CONTRACTOR SHALL VERIFY ALL DIMENSIONS IN THE FIELD. THE ARCHITECT SHALL BE NOTIFIED IMMEDIATELY UPON DISCOVERY OF ANY DISCREPANCY BETWEEN THE STRUCTURAL DRAWINGS AND THE ARCHITECTURAL DRAWINGS, OR OTHER CONSULTANT'S DRAWINGS.
   B. PLANS, SECTIONS AND DETAILA ARE NOT TO BE SCALED FOR DETERMINATION OF QUANTITIES, LENGTHS, OR FIT OF MATERIALS.
   C. VERIFY FLOOR SLAB DEPRESSIONS AND OFFSETS WITH ARCHITECTURAL DRAWINGS.
   D. THE SIZE AND LOCATION OF ALL MECHANICAL EQUIPMENT, EQUIPMENT PADS, AND ALL DUCT AND PIPE OPENINGS THROUGH SLABS AND WALLS SHALL BE VERIFIED WITH MECHANICAL AND ELECTRICAL DRAWINGS PRIOR TO FABRICATION OF MATERIALS.
   E. SHOP DRAWINGS SHALL BE ORIGINAL DRAWINGS PREPARED BY CONTRACTOR'S SUBCONTRACTOR, SUPPLIER, OR DISTRIBUTOR. REPRODUCTION OF STRUCTURAL CONTRACT DOCUMENTS AS ERECTION PLANS AND DETAILS SHALL NOT BE PERMITTED.
   F. SHOP DRAWINGS SHALL BE CHECKED BY GENERAL CONTRACTOR PRIOR TO BEING SUBMITTED TO THE STRUCTURAL ENGINEER FOR REVIEW.
   G. SHOP DRAWING SUBMITTALS SHALL CONTAIN THREE (3) PHOTOCOPIES OF EACH SHEET OF THE SUBMITTAL. ELECTRONIC COPIES (PDFs) OF EACH SUBMITTAL ARE ACCEPTABLE.

4. FOUNDATION
   A. THE FOUNDATION DESIGN IS BASED ON AN ALLOWABLE SOIL BEARING CAPACITY OF 1500 PSF. THE CONTRACTOR SHALL RETAIN A QUALIFIED GEOTECHNICAL ENGINEER LICENSED IN THE STATE OF OKLAHOMA TO VERIFY THE EXISTING SOIL CONDITIONS PROVIDE AT LEAST 1,500 PSF BEARING CAPACITY FOR FOOTINGS. SOIL UNDER THE FOOTINGS AND INTERIOR SLAB-ON-GRADE SHALL HAVE LOW VOLUME CHANGE CHARACTERISTICS WITH A LIQUID LIMIT LESS THAN 35 AND A PLASTICITY INDEX BETWEEN 5 AND 15. THE LOW VOLUME CHANGE SOILS SHALL BE A COHESIVE MATERIAL PROVIDING A POST-CONSTRUCTION VERTICAL FOOTING MOVEMENT OF 3/4" OR LESS BASED ON AN ACTIVE ZONE DEPTH OF 8 FEET. SOIL UNDER FOOTINGS AND SLABS SHALL BE FREE OF ORGANIC MATERIAL AND DEBRIS. THE EXISTING SOILS SHALL BE MODIFIED AS REQUIRED BY THE GEOTECHNICAL ENGINEER TO ACHIEVE THE ALLOWABLE SOIL BEARING CAPACITY LISTED AND LOW VOLUME CHANGE CHARACTERISTICS NOTED. IF THE ALLOWABLE SOIL BEARING CAPACITY IS FOUND TO BE LESS THAN 1,500 PSF, CONTACT THE ARCHITECT AND STRUCTURAL ENGINEER OF RECORD IMMEDIATELY FOR A FOOTING RE-DESIGN.
   B. GRANULAR FILL SHALL BE UNWASHED SIZE NO. 10 (SCREENINGS) PER ASTM D448, LATEST EDITION, HAVING A NOMINAL AGGREGATE SIZE NO. 4 (4.75mm) AND PERCENTAGES OF PARTICLE SIZES PASSING THRU A NO. 4 SIEVE IN ACCORDANCE WITH TABLE 1 OF D448:
      - 3/8" (9.5mm) 100%
      - NO. 4 (4.75mm) 85% TO 100%
      - NO. 100 (150micrometers) 10% TO 30%

      THE GRANULAR FILL NOTED ABOVE CAN BE SUBSTITUTED WITH ODOT TYPE "A" SCREENINGS. SAND IS NOT AN ACCEPTABLE SUBSTITUTE

5. CONCRETE AND CONCRETE REINFORCING
   A. CONCRETE MIX SCHEDULE:

CONC CLASS	STRENGTH (PSI)	AGG TYPE	AGG SIZE	SLUMP INCHES	MAX W/C
A	3000	HRC	1 1/2"	5-7	0.64
B	3000	HRC	1"	3-5	0.64

   NOTE: THE STRENGTH LISTED SHALL BE THE MINIMUM COMPRESSIVE STRENGTH AT 28 DAYS. THE REQUIRED AVERAGE COMPRESSIVE STRENGTH f'cr SHALL CONFORM TO A.C.I. STANDARD 318-14
   NOTE: "HRC" REFERS TO HARDROCK CONCRETE HAVING AN AIR DRY UNIT WEIGHT OF APPROXIMATELY 145 POUNDS PER CUBIC FOOT (PCF).
   NOTE: WHERE WATER-TO-CEMENT RATIO IS NOT INDICATED ON THE DRAWINGS OR IN THE PROJECT SPECIFICATIONS, IT SHALL BE DETERMINED BY THE CONTRACTOR TO MEET OTHER REQUIREMENTS.
   B. CONCRETE USAGE SCHEDULE:

DESCRIPTION OF USE	CONC CLASS	AIR CONTENT
-FOOTINGS, WALLS	A	---
-INTERIOR SLABS-ON-GRADE	B	---

   C. CLEAR DISTANCES FROM CONCRETE SURFACES TO REINFORCING STEEL SHALL NOT BE LESS THAN AS FOLLOWS, UNLESS NOTED OTHERWISE:
      - -FOOTINGS -3 INCHES ALL SIDES
      - -WALLS -VERTICAL BARS CENTERED IN WALL
      - -INTERIOR SLABS-ON-GRADE -2 INCHES FROM TOP OF SLAB
   D. CONCRETE REINFORCEMENT DETAILS SHALL CONFORM TO A.C.I. STANDARD 318-14, UNLESS NOTED OTHERWISE
   E. ALL REINFORCEMENT, #3 BARS AND LARGER, SHALL BE ASTM A615, GR 60
   F. LAP ALL REINFORCING BARS 45 BAR DIAMETERS, UNLESS NOTED OTHERWISE
   G. PROVIDE CORNER BARS IN BOTH FACES OF ALL FOOTINGS AND WALLS EXTENDED A MINIMUM OF 45 BAR DIAMETERS IN EACH DIRECTION. QUANTITY, SIZE AND SPACING OF CORNER BARS SHALL BE EQUAL TO QUANTITY, SIZE AND SPACING OF HORIZONTAL REINFORCING BARS WITH WHICH THEY LAP, EXCEPT THAT MAXIMUM CORNER BAR SIZE SHALL BE #6.
   H. REINFORCING SHALL BE ADEQUATELY SUPPORTED USING CHAIRS, BOLSTERS OR PRECAST CONCRETE BRICKS HAVING MINIMUM COMPRESSIVE STRENGTH EQUAL TO OR GREATER THAN THE CONCRETE. USE BOLSTERS OR OTHER SPACING DEVICES AS REQUIRED TO MAINTAIN PROPER SIDE CLEARANCES BETWEEN FORMS AND REINFORCING BARS.
   I. EARTH FORMED FOOTINGS ARE ACCEPTABLE AS LONG AS THE SIDES OF THE EXCAVATIONS CAN MAINTAIN A REASONABLY VERTICAL CUT WITHOUT SLOUGHING SOIL INTO THE EXCAVATION DURING REBAR PLACEMENT, DURING CONCRETE PLACEMENT AND THE EXCAVATION CAN MAINTAIN THE FOOTING SHAPE SPECIFIED ON THE DRAWINGS.
   J. EXTERIOR SLABS SHALL SLOPE AWAY FROM THE BUILDING 1/8" PER FOOT, UNLESS DIRECTED OTHERWISE BY THE ARCHITECT OR CIVIL ENGINEER.
   K. DO NOT WET PLACE DOWELS, ANCHOR BOLTS OR ANY EMBEDDED ITEMS INTO THE CONCRETE. USE TEMPLATES AS REQUIRED FOR ANCHOR BOLTS.
   L. DO NOT WELD REINFORCING BARS UNLESS BARS ARE PER ASTM A706.
   M. DO NOT HEAT AND BEND REINFORCING BARS.
   N. ALL BAR BENDING SHALL BE IN ACCORDANCE WITH A.C.I. 315-99 AND SP-66 (04), ACI DETAILING MANUAL.
   O. DO NOT FLAME CUT REINFORCING BARS.

6. CONCRETE MASONRY UNIT (STRUCTURAL)
   A. STRUCTURAL PROPERTIES:
      - REQUIRED PRISM STRENGTH OF STRUCTURAL ASSEMBLY 1500 PSI
      - REQUIRED 28-DAY COMPRESSIVE STRENGTH, MORTAR 1800 PSI
      - REQUIRED 28-DAY COMPRESSIVE STRENGTH, GROUT 2000 PSI
   B. ALL LOAD BEARING CMU WALLS SHALL BE 8 INCH (NOMINAL), NORMAL WEIGHT BLOCK.
   C. TYPICAL VERTICAL REINFORCING IN SOLID GROUTED CELL FULL HEIGHT OF WALL, UNLESS NOTED OTHERWISE:
      - LOAD BEARING EXTERIOR SHEAR WALLS #4 AT 24 INCHES O.C.
      - NON-LOAD BEARING INTERIOR 8 INCH CMU WALLS #4 VERT AT 48 INCHES O.C.
      - NON-LOAD BEARING INTERIOR 6 INCH CMU WALLS #3 VERT AT 48 INCHES O.C.
   D. PROVIDE A.C.I. STANDARD HOOK IN BOND BEAM ALONG TOP OF WALLS FOR ALL VERTICAL BARS. REFER 7/S3.1.
   E. PROVIDE TROUGH BLOCK BEAM (BOND BEAM) COURSES IN CMU WALLS FILLED WITH GROUT AT DOOR HEADS, WINDOW HEADS, BELOW WINDOWS, AND AT EVERY SIXTH COURSE REINFORCED WITH 2-#4 CONTINUOUS, UNLESS NOTED OTHERWISE.
   F. HORIZONTAL REINFORCING IN BOND BEAMS SHALL BE LAPPED 36 BAR DIAMETERS AT SPLICES. STAGGER SPLICES IN ADJACENT BARS AT LEAST 4'-0".
   G. VERTICAL REINFORCING IN GROUTED CELLS SHALL BE LAPPED 40 BAR DIAMETERS AND WIRE TIED AT SPLICES, UNLESS NOTED OTHERWISE. DO NOT SPLICE REINFORCING ONE-FOURTH (1/4) OF WALL HEIGHT ABOVE OR BELOW MID-HEIGHT.
   H. PROVIDE VERTICAL CONTROL JOINTS IN ALL MASONRY WALLS AT LOCATIONS INDICATED BY THE ARCHITECT. CONTROL JOINTS MAY BE EITHER RUBBER OR PVC CONFORMING TO ASTM D-2000 2AA-805 OR D-2287 AND TESTED IN ACCORDANCE WITH ASTM D-2240 WITH A MINIMUM DUROMETER HARDNESS OF 70.
   I. USE HECKMAN NO. 374 REBAR POSITIONERS OR APPROVED EQUAL TO LOCATE VERTICAL BARS IN CENTER OF CELLS. REFER 5/S3.1.
   J. CONTRACTOR SHALL PROVIDE TEMPORARY LATERAL BRACING FOR ALL CMU WALLS UNTIL AFTER ROOF FRAMING AND ROOF DECK INSTALLATION IS COMPLETE. LATERAL BRACING SHALL BE ADEQUATE TO RESIST WIND AND ANY CONTRUCTION LOADS.

7. STRUCTURAL STEEL
   A. STRUCTURAL STEEL SHALL MEET THE FOLLOWING ASTM SPECIFICATIONS:
      - STRUCTURAL WIDE FLANGE SHAPES .... ASTM A992 (Fy=50 ksi MIN)
      - STRUCTURAL STEEL PLATES, CHANNELS, ANGLES .... ASTM A36 (Fy=36 ksi MIN)
      - TUBULAR HSS SHAPES .... ASTM A500, GRADE B
      - PIPE .... ASTM A53, GRADE B
      - COMMON BOLTS .... ASTM A307
      - HIGH STRENGTH BOLTS .... ASTM A325
   B. BOLTS SHALL BE AS FOLLOWS:
      - BEARING CONNECTIONS FOR STEEL CONNECTIONS .... 3/4" DIA, HIGH STRENGTH
      - ANCHOR BOLTS .... ASTM F1554, GRADE 36
      - ERECTION BOLTS .... COMMON
   C. STRUCTURAL STEEL SHALL BE FABRICATED AND ERECTED IN ACCORDANCE WITH A.I.S.C. "SPECIFICATIONS FOR THE DESIGN, FABRICATION AND ERECTION OF STRUCTURAL STEEL."
   D. ALL STRUCTURAL STEEL CONNECTIONS NOT DETAILED OR OTHERWISE NOTED SHALL BE STANDARD A.I.S.C. WELDED OR BOLTED USING ALLOWABLE STRESS DESIGN. DETAIL BOLTED OR WELDED CONNECTIONS TO SUPPORT ONE-HALF THE TOTAL UNIFORM LOAD CAPACITY SHOWN IN THE ALLOWABLE UNIFORM LOAD TABLES OF THE A.I.S.C. MANUAL OF STEEL CONSTRUCTION.
   E. ALL BOLTS USED IN STEEL CONNECTIONS SHALL BE SNUG-TIGHT AS DEFINED BY A.I.S.C. UNLESS NOTED OTHERWISE. TENSION CONTROL BOLTS ARE ACCEPTABLE SUBSTITUTES FOR SNUG-TIGHT BOLTS AT FABRICATOR'S AND ERECTOR'S DISCRETION.
   F. STANDARD HOLE SIZES SHALL BE USED FOR STEEL BEARING CONNECTIONS. SHORT SLOTTED HOLES ARE NOT ACCEPTABLE FOR BEARING CONNECTIONS.
   G. OVERSIZED HOLES ARE ACCEPTABLE FOR COLUMN BASEPLATES. WHEN OVERSIZED HOLES ARE USED FOR BASEPLATES, STEEL WASHERS SHALL BE USED BETWEEN THE NUTS AND BASEPLATE. THE WASHERS SHALL BE WELDED TO THE BASEPLATES. REFER ANCHOR BOLT DETAIL.
   H. ALL WELDING SHALL COMPLY WITH A.W.S. STANDARD D1.1.
   I. WELDING ELECTRODES SHALL BE E70 UNLESS OTHERWISE NOTED OR REQUIRED BY THE WELDING PROCEDURE SPECIFICATIONS FOR THE WORK BEING PERFORMED. ALL ELECTRODES USED ON THE PROJECT SHALL BE STORED AS REQUIRED BY A.W.S. D1.1.
   J. ALL FIELD WELDS SHALL BE VISUALLY INSPECTED BY A CERTIFIED WELD INSPECTOR. THE WELD INSPECTOR CAN SPECIFY OTHER WELD TESTING METHODS AT THE INSPECTOR'S DISCRETION.
   K. ALL FIELD BOLTED CONNECTIONS SHALL BE VISUALLY INSPECTED BY A SPECIAL INSPECTOR TO VERIFY ALL BOLTS ARE INSTALLED AND TIGHTENED IN ACCORDANCE WITH THE PROJECT SPECIFICATIONS.
   L. DO NOT FLAME CUT HOLES IN THE FIELD FOR FRAMED CONNECTIONS.

8. METAL ROOF DECK
   A. STEEL ROOF DECK SHALL BE 20 GA., TYPE B DECK CONFORMING TO THE STANDARDS OF THE STEEL DECK INSTITUTE. MINIMUM SECTION PROPERTIES SHALL BE I=0.212 IN4/FT, Sn=0.247 IN3/FT, Sp=0.234 IN3/FT, D=1.5 IN
   B. METAL ROOF DECK CONNECTION SCHEDULE:

MARK	CONN AT SUPPORTS (W/N)	CONN AT PARALLEL EDGE SUPPORTS SPACING	SIDELAP CONN NO. PER SPAN
1	36/7	12 INCHES	3

   W/N = SHEET WIDTH AND NUMBER OF CONNECTIONS PER SHEET
   C. SUPPORT AND PARALLEL EDGE CONNECTIONS SHALL BE NO. 12 SELF-DRILLING SCREWS THROUGH THE DECK INTO THE ROOF FRAMING. SIDELAP CONNECTIONS SHALL BE NO. 10 SELF-DRILLING SCREWS.
   D. ROOF DECK SHALL BE CONNECTED AS INDICATED FOR MARK 1 THROUGHOUT

9 FABRICATED, ENGINEERED COLD-FORMED METAL TRUSSES
   A. TRUSSES SHALL BE DESIGNED IN ACCORDANCE WITH THESE SPECIFICATIONS AND WHERE ANY APPLICABLE DESIGN FEATURE IS NOT SPECIFIED HEREIN, DESIGN SHALL BE IN ACCORDANCE WITH THE APPLICABLE PROVISIONS OF THE LATEST EDITION OF THE AISI "SPECIFICATIONS FOR THE DESIGN OF COLD-FORMED STEEL STRUCTURAL MEMBERS" AND THE BUILDING CODE SHOWN ON THESE DRAWINGS.
   B. COLD-FORMED METAL TRUSSES SHALL BE SHOP FABRICATED BY A QUALIFIED COLD-FORMED METAL TRUSS FABRICATOR. TRUSSES SHALL BE DESIGNED BY A QUALIFIED STRUCTURAL ENGINEER LICENSED IN THE STATE OF OKLAHOMA. THE TRUSS FABRICATOR SHALL FURNISH SHOP DRAWINGS BEARING THE PROFESSIONAL ENGINEER'S SEAL AND SIGNATURE OF THE STRUCTURAL ENGINEER RESPONSIBLE FOR THE TRUSS DESIGN.
   C. TRUSSES SHALL BE DESIGNED TO SUPPORT 20 PSF ROOF LIVE LOAD AND 10 PSF ROOF DEAD LOAD ON THE TOP CHORD AND 10 PSF DEAD LOAD ON THE BOTTOM CHORD.
   D. TRUSSES SHALL BE ATTACHED TO SUPPORTS USING TRUSS MANUFACTURER'S STANDARD GALVANIZED METAL FRAMING ANCHORS. THE SUPPORT CONNECTORS SHALL BE SIZED TO RESIST UPLIFT FORCES CALCULATED BY THE TRUSS DESIGN ENGINEER. SUPPORT CONNECTORS SHALL BE SPECIFIED ON THE TRUSS SHOP DRAWINGS.
   E. TRUSS FABRICATOR SHALL PRODUCE AND SUBMIT FOR REVIEW DESIGN DRAWINGS FOR EACH TRUSS REQUIRED FOR THE PROJECT.
   F. TRUSS DESIGN DRAWINGS SHALL INCLUDE:
      1. ERECTION PLAN SHOWING LOCATIONS AND PIECE MARKS OF EACH TRUSS TYPE.
      2. TEMPORARY BRACING PLANS REQUIRED FOR TRUSS ERECTION.
      3. SPAN, DEPTH, SLOPE AND SPACING OF TRUSSES.
      4. REQUIRED BEARING WIDTH AND LENGTH.
      5. DESIGN LIVE, DEAD, WIND AND SEISMIC LOADS.
      6. REACTIVE FORCES, THEIR POINTS OF OCCURRENCE AND DIRECTION.
      7. SIZE, QUANTITY AND TYPE OF ALL CONNECTIONS FOR TRUSS MEMBERS.
      8. LOCATIONS OF ANY REQUIRED PERMANENT, CONTINUOUS BRACING FOR BOTTOM CHORDS AND WEB MEMBERS.
      9. CALCULATED DEFLECTIONS FOR LIVE AND TOTAL LOADS.
      10. MAXIMUM AXIAL COMPRESSIVE AND TENSILE FORCES IN TRUSS MEMBERS.
      11. LOCATION OF JOINTS.
      12. CONNECTION REQUIREMENTS FOR:
          a. TRUSS-TO-TRUSS.
          b. TRUSS PLY-TO-PLY.
          c. FIELD SPLICES.
      13. TRUSS FABRICATOR'S STANDARD CONNECTORS FOR TRUSS-TO-TRUSS, FIELD SPLICES AND TRUSS PLY-TO-PLY.
   G. TRUSS MEMBERS SHALL BE COLD-FORMED STEEL CONFORMING TO ASTM A653, MINIMUM G-60 COATING AND ASTM A500. MATERIAL THICKNESSES SHALL BE DETERMINED BY MANUFACTURER BASD ANALYSIS TO ADEQUATELY SUPPORT ALL DEAD AND LIVE LOADS.
   H. LOAD COMBINATIONS SHALL BE IN ACCORDANCE WITH ASCE 7-05. ONE-THIRD INCREASE IN ALLOWABLE STEEL STRESSES IS NOT ALLOWED.
   I. HANDLING, INSTALLATION AND BRACING
      1. TRUSSES SHALL BE HANDLED DURING FABRICATION, DELIVERY AND AT THE JOBSITE DO AS NOT TO BE SUBJECTED TO EXCESSIVE BENDING IN ANY DIRECTION.
      2 TRUSSES SHALL BE UNLOADED ON SMOOTH GROUND TO AVOID LATERAL STRAIN.
      3. TRUSSES SHALL BE PROTECTED FROM DAMAGE THAT MIGHT RESULT FROM ON-SITE ACTIVITIES AND ENVIRONMENTAL CONDITIONS.
      4. PREVENT TOPPLING WHEN BANDING IS REMOVED.
      5. APPARENT DAMAGE TO TRUSSES SHALL BE REPORTED IMMEDIATELY TO THE ARCHITECT AND TRUSS FABRICATOR PRIOR TO INSTALLATION. ALL DAMAGE SHALL BE REPAIRED AT FABRICATOR'S DIRECTION PRIOR TO INSTALLATION.
      6. TRUSSES SHALL BE SET AND SECURED LEVEL AND PLUMB, AND IN THE CORRECT LOCATION. TRUSSES SHALL BE HELD IN CORRECT ALIGNMENT UNTIL SPECIFIED PERMANENT BRACING IS INSTALLED. PERMANENT BRACING SHALL BE EITHER AS SPECIFIED ON THE CONSTRUCTION DOCUMENTS OR LATERAL BRACING SPECIFIED ON TRUSS FABRICATOR'S DESIGN DRAWINGS.
      7. CUTTING AND ALTERING TRUSSES IS NOT PERMITTED WITHOUT WRITTEN APPROVAL FROM STRUCTURAL ENGINEER OF RECORD AND TRUSS FABRICATOR'S DESIGN ENGINEER.
      8. CONCENTRATED LOADS SHALL NOT BE PLACED ATOP TRUSSES UNTIL ALL SPECIFIED BRACING AND ROOF DECK IS PERMANENTLY FASTENED IN PLACE. SPECIFICALLY AVOID STACKING BUNDLES OF DECKING, SHINGLES OR OTHER MATERIALS ON UNSHEATHED AND UNBRACED TRUSSES.
      9. ERECTION BRACING IS ALWAYS REQUIRED. TRUSS FABRICATOR SHALL PROVIDE ERECTION BRACING DRAWINGS.
      10. THE CONTRACTOR IS RESPONSIBLE FOR OBTAINING AND FURNISHING THE MATERIALS USED FOR INSTALLATION OF ERECTION AND PERMANENT BRACING.
      12. UNLESS NOTED OTHERWISE ON THE FABRICATOR'S DESIGN DRAWINGS, PROVIDE CONTINUOUS HORIZONTAL BRACING AT 8'-0" O.C. MAX FOR BOTTOM CHORDS.
   J. ALL TRUSSES SHALL BE SHOP FABRICATED AND SHOP ASSEMBLED UNLESS NOTED ON THE TRUSS FABRICATOR'S SHOP DRAWINGS FOR MULTI-PLY TRUSSES, TRUSSES TO BE FIELD-SPLICED OR PIGGY-BACK TRUSSES.
   K. TRUSSES SHALL NOT BE FABRICATED USING COLD-FORMED CEE-SHAPES USED FOR LOAD BEARING WALL CONSTRUCTION.
   L. APPROVED TRUSS FABRICATORS:
      1. AEGIS METAL FRAMING www.aegismetalframing.com
         14515 N. OUTER 40, SUITE 110
         CHESTERFIELD, MO 43017
      2. TRUSSTEEL (ALPINE) - DIV. OF ITW BUILDING COMPONENTS GROUP www.trussteel.com
      3. MANUFACTURER SUBSTITUTIONS SHALL BE SUBMITTED FOR APPROVAL BY THE ARCHITECT AND STRUCTURAL ENGINEER OF RECORD BEFORE THE MANUFACTURER IS RETAINED BY THE CONTRACTOR.

10. IN ACCORDANCE WITH THE REQUIREMENTS OF CHAPTER 17 OF THE 2015 INTERNATIONAL BUILDING CODE, THE OWNER SHALL PROVIDE QUALIFIED PERSONNEL TO PERFORM THE FOLLOWING SPECIAL INSPECTIONS AND SHALL FURNISH COPIES OF THE SPECIAL INSPECTOR'S WRITTEN INSPECTION REPORTS TO THE ARCHITECT, STRUCTURAL ENGINEER OF RECORD AND THE BUILDING OFFICIAL. THE SPECIAL INSPECTIONS DO NOT RELIEVE TEH CONTRACTOR OF ANY RESPONSIBILITY TO PERFORM THE WORK IN ACCORDANCE WITH THE CONTRACT DOCUMENTS. THE CONTRACTOR SHALL COOPERATE WITH THE SPECIAL INSPECTOR TO ALLOW ACCESS TO THE WORK FOR THE REQUIRED INSPECTIONS. THE CONTRACTOR SHALL NOTIFY THE INSPECTOR AT LEAST 24 HOURS IN ADVANCE OF ALL WORK REQUIRING INSPECTIONS.

   A. SOILS AND FOUNDATIONS:

1. CONTROLLED STRUCTURAL FILL	PEFORM SIEVE TESTS (ASTM D422 & D1140) AND MODIFIED PROCTOR TESTS (ASTM D1557) OF EACH SOURCE OF FILL MATERIAL INSTALLED UNDER THE BUILDING FOOTPRINT. VERIFY FILL MEETS REQUIREMENTS OF GEOTECH REPORT. INSPECT PLACEMENT, LIFT THICKNESS AND COMPACTION OF STRUCTURAL FILL. TEST DENSITY OF EACH LIFT OF FILL BY NUCLEAR MATERIALS (ASTM D2922). VERIFY EXTENT OF SLOPE OF FILL PLACEMENT.

   B. CAST-IN-PLACE CONCRETE:

1. MIX DESIGN	REVIEW BATCH TICKETS & VERIFY COMPLIANCE WITH CONTRACT DOCUMENTS FOR EACH READY-MIX TRUCK DELIVERY. VERIFY WATER ADDED AT SITE DOES NOT EXCEED WATER ALLOWED BY MIX DESIGN
2. REINFORCEMENT INSTALLATION	PRIOR TO PLACEMENT OF CONCRETE FOR DRILLED PIERS, GRADE BEAMS, STEM WALLS AND SLABS-ON-GROUND: INSPECT AND VERIFY SIZE, SPACING, SPLICE LAPS, COVER, POSITIONING AND GRADE OF REINFORCING STEEL. VERIFY REBARS AND DOWELS ARE CLEAN, ADEQUATELY SUPPORTED AND SECURED.
3. WELDING OF REINFORCING	VISUALLY INSPECT ALL WELDED REBAR. VERIFY WELDABLE REINFORCING USED.
4. ANCHORS AND EMBEDDED ITEMS	INSPECT AND VERIFY SIZE, POSITIONING AND AND EMBEDMENT OF ALL ANCHOR BOLTS AND EMBEDDED ITEMS PRIOR TO CONCRETE PLACEMENT. VERIFY CONCRETE CONSOLIDATION AROUND ANCHORS AND EMBEDS
5. CONCRETE PLACEMENT	INSPECT CONCRETE PLACEMENT FOR DRILLED PIERS, GRADE BEAMS, STEM WALLS AND SLABS-ON-GROUND. VERIFY PROPER CONVEYANCE AND CONSOLIDATION PROCEDURES USED
6. SAMPLING AND TESTING OF CONCRETE	PREPARE TEST SAMPLES AND PERFORM TESTS FOR COMPRESSIVE STRENGTH (ASTM C31 AND C39), SLUMP (ASTM C143), AIR CONTENT (ASTM C231 OR C173) AND TEMPERATURE (ASTM C1064). QUANTITY AND FREQUENCY OF TEST SAMPLES SHALL BE IN ACCORDANCE WITH CONTRACT DOCUMENTS.
7. CURING AND PROTECTION	INSPECT AND VERIFY PROPER CURING, COLD WEATHER, HOT WEATHER PROTECTION IN ACCORDANCE WITH CONTRACT DOCUMENTS AND ACI STANDARDS.

   11. FABRICATED, ENGINEERED WOOD TRUSSES

   C. CMU - LEVEL 1 INSPECTION.

1. MATERIAL CERTIFICATION	VERIFY COMPLIANCE WITH CONTRACT DOCUMENTS REQUIREMENTS
2. MIXING OF MORTAR AND GROUT	INSPECT PROPORTIONING, MIXING AND RETEMPERING OF MORTAR AND GROUT
3. INSTALLATION OF MASONRY	INSPECT SIZE, LAYOUT, BONDING AND PLACEMENT OF CMU
4. MORTAR JOINTS	INSPECT CONSTRUCTION OF TOOLING AND FILLING OF HEAD JOINTS
5. REINFORCEMENT INSTALLATION	INSPECT SIZE, PLACEMENT, POSITIONING, AND LAPPING OF ALL REINFORCING. INSPECT WELDING OF REINFORCING.
6. GROUTING OPERATIONS	INSPECT PLACEMENT AND CONSOLIDATION OF GROUT FOR ALL BOND BEAMS AND VERTICAL CELLS CONTAINING REINFORCING
7. WEATHER PROTECTION	VERIFY COLD WEATHER AND HOT WEATHER PROTECTION OF CLAY MASONRY
8. EVALUATION OF MASONRY STRENGTH	REVIEW CERTIFICATES FOR MORTAR AND GROUT SATISFY PROJECT SPECIFICATIONS
9. ANCHORS AND TIES	INSPECT AND VERIFY SIZE, LOCATION, SPACING AND EMBEDMENT OF ALL DOWELS, ANCHORS, TIES AND BEARING PLATES FOR BEAMS AND JOISTS

   D. STRUCTURAL FRAMING:

1. FABRICATOR CERTIFICATION/ QUALITY CONTROL PROCEDURES	AT BEGINNING OF PROJECT AND WEEKLY DURING FABRICATION: REVIEW SHOP FABRICATION AND QUALITY CONTROL PROCEDURES
2. MATERIAL CERTIFICATION	AT BEGINNING OF PROJECT AND WEEKLY THEREAFTER: REVIEW MILL TEST REPORTS AND I.D. MARKINGS
3. BOLTING	INSPECT INSTALLATION AND TIGHTENING OF ALL BOLTS. VERIFY ALL BOLTS INSTALLED
4. WELDING	VISUALLY INSPECT ALL SHOP AND FIELD WELDS
5. STRUCTURAL DETAILS	INSPECT FRAMING FOR COMPLIANCE WITH DRAWINGS DURING INSPECTION OF WELDS AND BOLTED CONNECTIONS
6. METAL ROOF DECK.	VISUALLY INSPECT ALL SCREWS USED FOR ROOF DECK ATTACHMENT TO VERIFY THE SCREWS ARE INSTALLED IN THE PATTERN SHOWN IN THE GENERAL NOTES, INSTALLED INTO THE FRAMING, PROPERLY TIGHTENED AND IN FULL CONTACT WITH THE DECK.
7. STEEL JOISTS	VERIFY ALL JOIST BRIDGING IS INSTALLED IN ACCORDANCE WITH THE JOIST MANUFACTURER'S ERECTION PLANS AND DETAILS
	VERIFY ALL JOIST SEATS ARE WELDED OR BOLTED TO SUPPORTS IN ACCORDANCE WITH THE DRAWINGS AND JOIST MANUFACTURER'S ERECTION PLANS AND DETAILS
	VERIFY ALL JOISTS ARE INSTALLED STRAIGHT BETWEEN SUPPORTS

THIS DOCUMENT IS RELEASED WITH THE LIMITATIONS OF NOT FOR CONSTRUCTION FOR THE PURPOSE OF DESIGN DEVELOPMENT REVIEW UNDER THE AUTHORITY OF ROY C. DEAN, OKLAHOMA P.E. No. 19792, ON 6-1-16. THIS MEDIA IS NOT A SEALED DOCUMENT AND SHALL NOT BE USED FOR ANY PURPOSE EXCEPT THAT STATED ABOVE.

waters edge
AQUATIC DESIGN
11205 W. 79th St.
Lenexa, KS 66214
t. 913.438.4338
www.WeDesignPools.com

THE MCKINNEY PARTNERSHIP
architects
3600 West Main
Suite 200
Norman, Oklahoma
73072
405.360.1400 p
405.364.8287 f
tmparch.com

TRUMBLE DEAN LLC
STRUCTURAL ENGINEERS
8512 S. PENNSYLVANIA AVE, SUITE A
OKLAHOMA CITY, OKLAHOMA 73159
(405) 848-9202 FAX 848-9204
CERTIFICATE OF AUTHORIZATION NO. 3667
EXPIRATION DATE: JUNE 30, 2017

Copyright © 2008 The McKinney Partnership Architects, P.C., All Rights Reserved
COPYRIGHT TRUMBLE DEAN LLC 2016

WESTWOOD FAMILY SWIM COMPLEX
2400 Westport Drive
Norman, OK

Seal:

Date: 06/1/2016	Job #: CM074516
Drawn: RD	Checked: RCD
Issue: DD_REVIEW_SET	

GENERAL STRUCTURAL NOTES

Water's Edge Aquatic Design ©

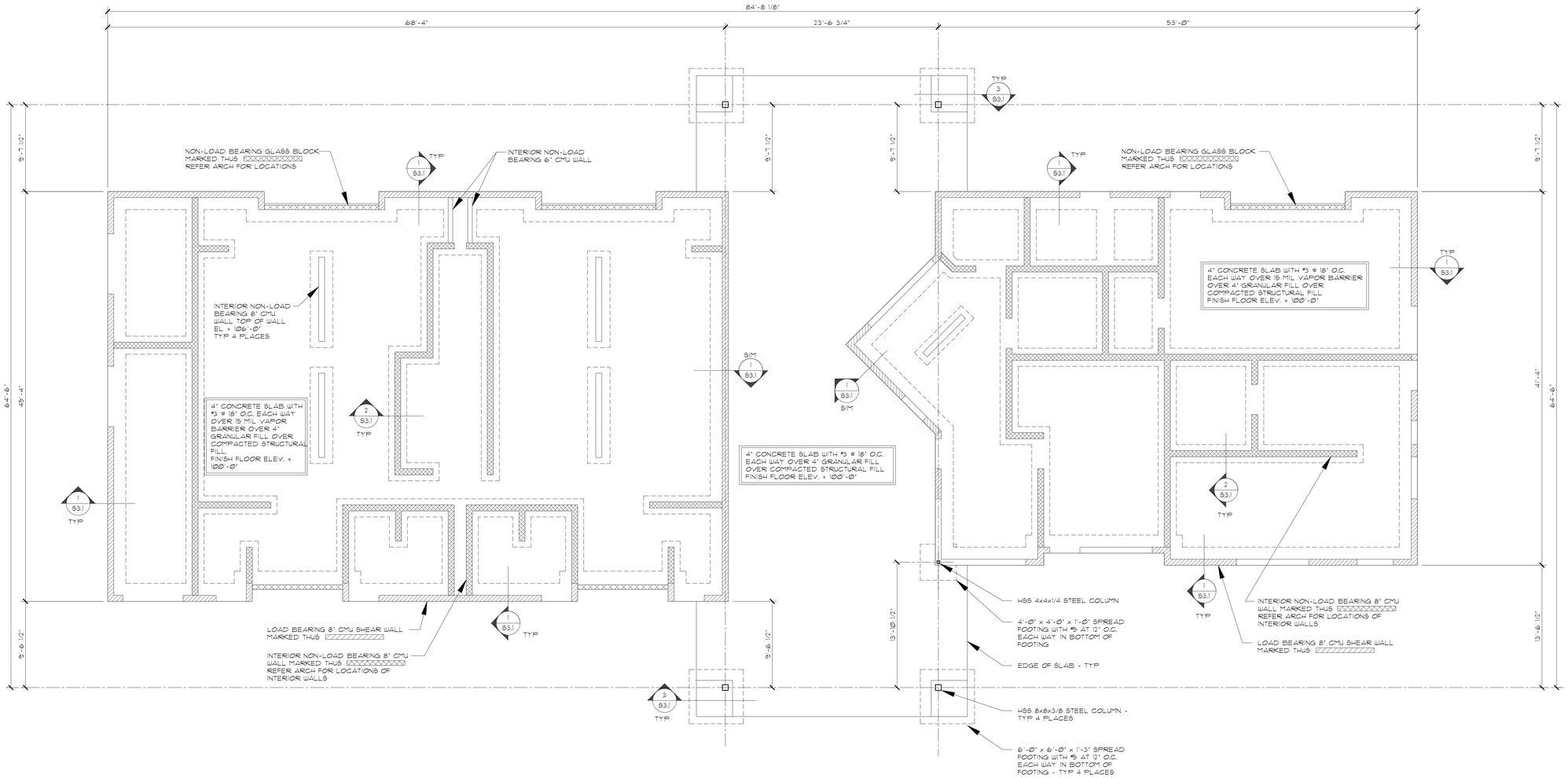

1 S2.0 FOUNDATION PLAN – BATH HOUSE
SCALE: 3/16"= 1'-0"

THIS DOCUMENT IS RELEASED WITH THE LIMITATIONS OF NOT FOR CONSTRUCTION FOR THE PURPOSE OF DESIGN DEVELOPMENT REVIEW UNDER THE AUTHORITY OF ROY C. DEAN, OKLAHOMA P.E. No. 19792, ON 6-1-16. THIS MEDIA IS NOT A SEALED DOCUMENT AND SHALL NOT BE USED FOR ANY PURPOSE EXCEPT THAT STATED ABOVE.

TRUMBLE DEAN LLC
STRUCTURAL ENGINEERS
8512 S. PENNSYLVANIA AVE, SUITE A
OKLAHOMA CITY, OKLAHOMA 73159
(405) 848-9202 FAX 848-9204
CERTIFICATE OF AUTHORIZATION NO. 3667
EXPIRATION DATE: JUNE 30, 2017
COPYRIGHT TRUMBLE DEAN LLC 2016

waters edge AQUATIC DESIGN
11205 W. 79th St.
Lenexa, KS 66214
t. 913.438.4338
www.WeDesignPools.com

THE MCKINNEY PARTNERSHIP architects
3600 West Main
Suite 200
Norman, Oklahoma
73072
405.360.1400 p
405.364.8287 f
tmparch.com

Copyright © 2006 The McKinney Partnership Architects, P.C., All Rights Reserved

WESTWOOD FAMILY SWIM COMPLEX

2400 Westport Drive
Norman, OK

Seal:

Date: 06/1/2016	Job #: CM074516
Drawn: RD	Checked: RCD
Issue: DD_REVIEW_SET	

FOUNDATION PLAN

S2.0

Water's Edge Aquatic Design ©

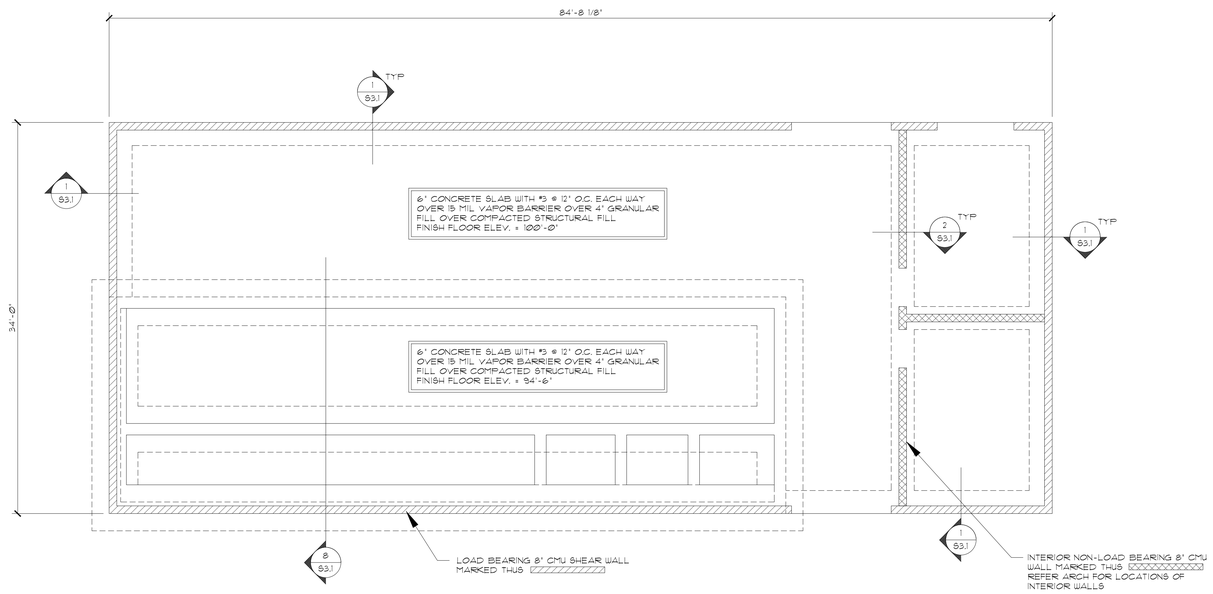

N

1 S2.1 FOUNDATION PLAN – FILTER BUILDING

SCALE: 3/16"= 1'-0"

THIS DOCUMENT IS RELEASED WITH THE LIMITATIONS OF NOT FOR CONSTRUCTION FOR THE PURPOSE OF DESIGN DEVELOPMENT REVIEW UNDER THE AUTHORITY OF ROY C. DEAN, OKLAHOMA P.E. No. 19792, ON 6-1-16. THIS MEDIA IS NOT A SEALED DOCUMENT AND SHALL NOT BE USED FOR ANY PURPOSE EXCEPT THAT STATED ABOVE.

TRUMBLE DEAN LLC
STRUCTURAL ENGINEERS
8512 S. PENNSYLVANIA AVE, SUITE A
OKLAHOMA CITY, OKLAHOMA 73159
(405) 848-9202 FAX 848-9204
CERTIFICATE OF AUTHORIZATION NO. 3667
EXPIRATION DATE: JUNE 30, 2017
COPYRIGHT TRUMBLE DEAN LLC 2016

waters edge
AQUATIC DESIGN
11205 W. 79th St.
Lenexa, KS 66214
t. 913.438.4338
www.WeDesignPools.com

THE MCKINNEY PARTNERSHIP
architects
3600 West Main
Suite 200
Norman, Oklahoma
73072
405.360.1400 p
405.364.8287 f
tmparch.com

Copyright © 2006 The McKinney Partnership Architects, P.C., All Rights Reserved

WESTWOOD FAMILY SWIM COMPLEX

2400 Westport Drive
Norman, OK

Seal:

Date: 06/1/2016	Job #: CM074516
Drawn: RD	Checked: RCD
Issue: DD_REVIEW_SET	

FOUNDATION PLAN

S2.1

Water's Edge Aquatic Design

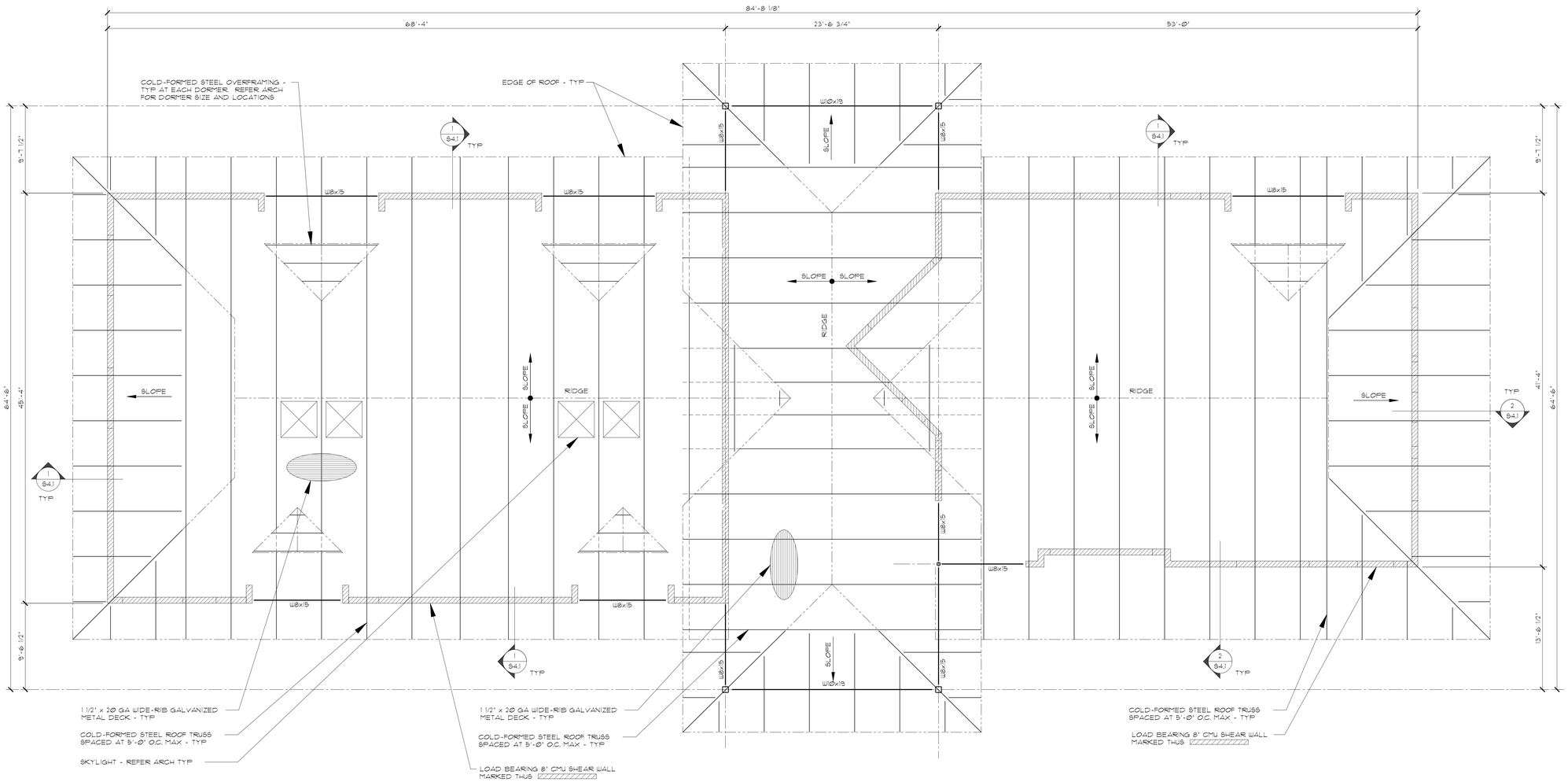

N

1 S2.2 ROOF FRAMING PLAN – BATH HOUSE

SCALE: 3/16"= 1'-0"

THIS DOCUMENT IS RELEASED WITH THE LIMITATIONS OF NOT FOR CONSTRUCTION FOR THE PURPOSE OF DESIGN DEVELOPMENT REVIEW UNDER THE AUTHORITY OF ROY C. DEAN, OKLAHOMA P.E. No. 19792, ON 6-1-16. THIS MEDIA IS NOT A SEALED DOCUMENT AND SHALL NOT BE USED FOR ANY PURPOSE EXCEPT THAT STATED ABOVE.

TRUMBLE DEAN LLC
STRUCTURAL ENGINEERS
8512 S. PENNSYLVANIA AVE. SUITE A
OKLAHOMA CITY, OKLAHOMA 73159
(405) 848-9202 FAX 848-9204
CERTIFICATE OF AUTHORIZATION NO. 3667
EXPIRATION DATE: JUNE 30, 2017
COPYRIGHT TRUMBLE DEAN LLC 2016

waters edge AQUATIC DESIGN
11205 W. 79th St.
Lenexa, KS 66214
t. 913.438.4338
www.WeDesignPools.com

THE MCKINNEY PARTNERSHIP architects
3600 West Main
Suite 200
Norman, Oklahoma
73072
405.360.1400 p
405.364.8287 f
tmparch.com

Copyright © 2006 The McKinney Partnership Architects, P.C. All Rights Reserved

WESTWOOD FAMILY SWIM COMPLEX

2400 Westport Drive
Norman, OK

Seal:

Date: 06/1/2016	Job #: CM074516
Drawn: RD	Checked: RCD
Issue: DD_REVIEW_SET	

ROOF FRAMING PLAN

S2.2

Water's Edge Aquatic Design ©

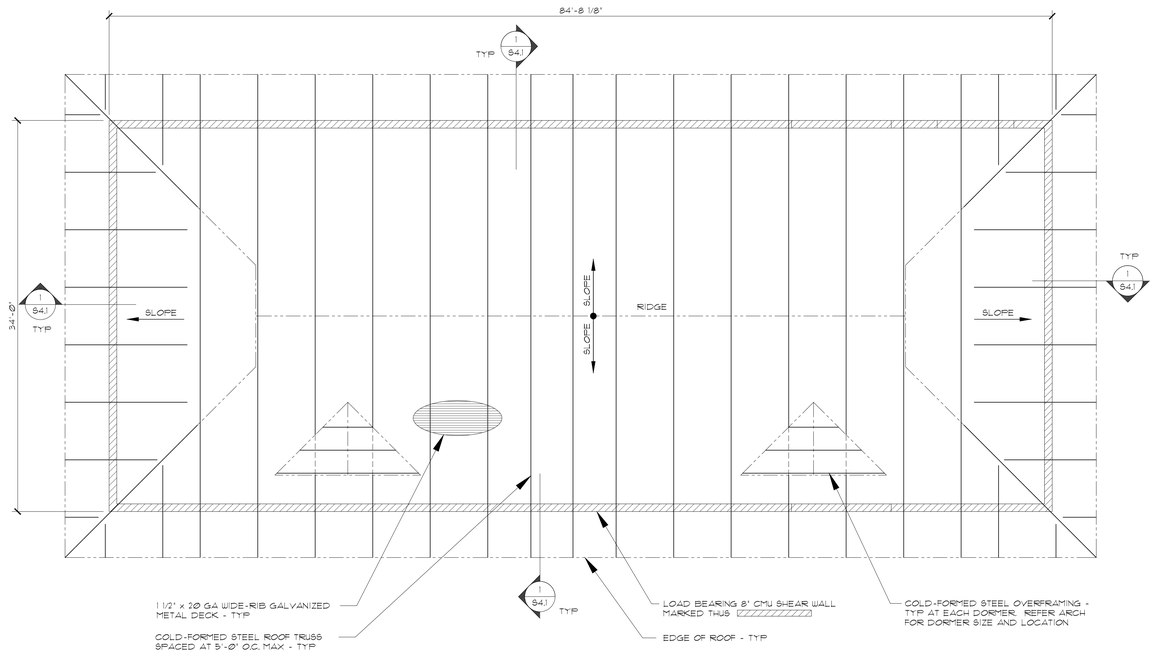

N

1 S2.3 ROOF FRAMING PLAN – FILTER BUILDING

SCALE: 3/16"= 1'-0"

THIS DOCUMENT IS RELEASED WITH THE LIMITATIONS OF NOT FOR CONSTRUCTION FOR THE PURPOSE OF DESIGN DEVELOPMENT REVIEW UNDER THE AUTHORITY OF ROY C. DEAN, OKLAHOMA P.E. No. 19792, ON 6-1-16. THIS MEDIA IS NOT A SEALED DOCUMENT AND SHALL NOT BE USED FOR ANY PURPOSE EXCEPT THAT STATED ABOVE.

TRUMBLE DEAN LLC
STRUCTURAL ENGINEERS
8512 S. PENNSYLVANIA AVE, SUITE A
OKLAHOMA CITY, OKLAHOMA 73159
(405) 848-9202 FAX 848-9204
CERTIFICATE OF AUTHORIZATION NO. 3667
EXPIRATION DATE: JUNE 30, 2017
COPYRIGHT TRUMBLE DEAN LLC 2016

waters edge
AQUATIC DESIGN
11205 W. 79th St.
Lenexa, KS 66214
t. 913.438.4338
www.WeDesignPools.com

THE MCKINNEY PARTNERSHIP
architects
3600 West Main
Suite 200
Norman, Oklahoma
73072
405.360.1400 p
405.364.8287 f
tmparch.com

Copyright © 2006 The McKinney Partnership Architects, P.C., All Rights Reserved

WESTWOOD FAMILY SWIM COMPLEX

2400 Westport Drive
Norman, OK

Seal:

Date: 06/1/2016	Job #: CM074516
Drawn: RD	Checked: RCD
Issue: DD_REVIEW_SET	

ROOF FRAMING PLAN

S2.3

Water's Edge Aquatic Design

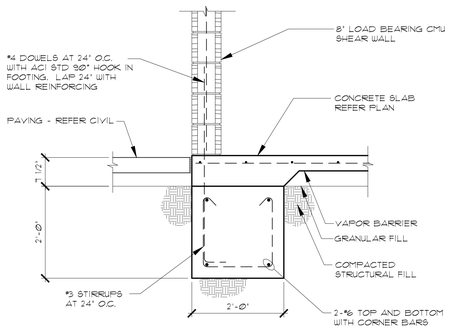

1 S3.1 SECTION

SCALE: 3/4"= 1'-0"

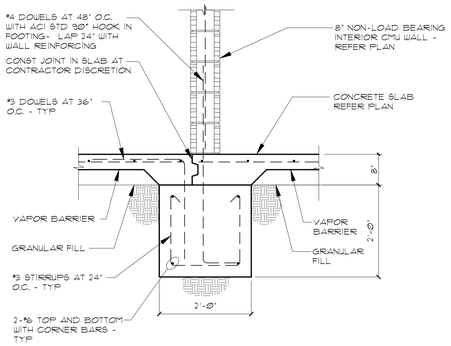

2 S3.1 SECTION

SCALE: 3/4"= 1'-0"

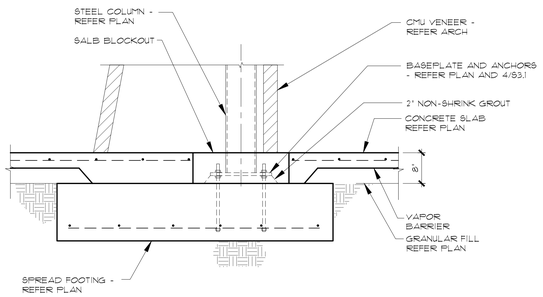

3 S3.1 SECTION

SCALE: 3/4"= 1'-0"

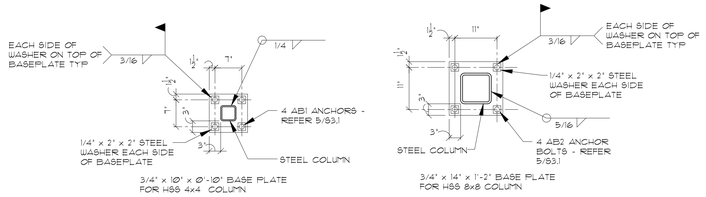

4 S3.1 DETAILS - BASEPLATES

SCALE: 3/4"= 1'-0"

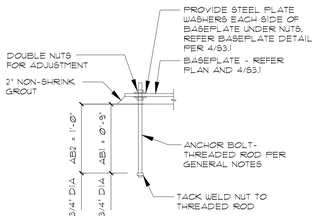

5 S3.1 DETAIL - ANCHOR BOLT

SCALE: 3/4"= 1'-0"

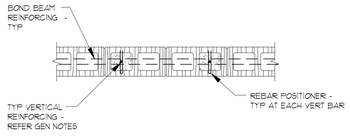

VERTICAL BARS AND REBAR POSITIONERS REQUIRED IN EACH CELL OF SOLID GROUTED WALL

6 S3.1 PLAN DETAIL - TYPICAL 8" CMU

SCALE: 3/4"= 1'-0"

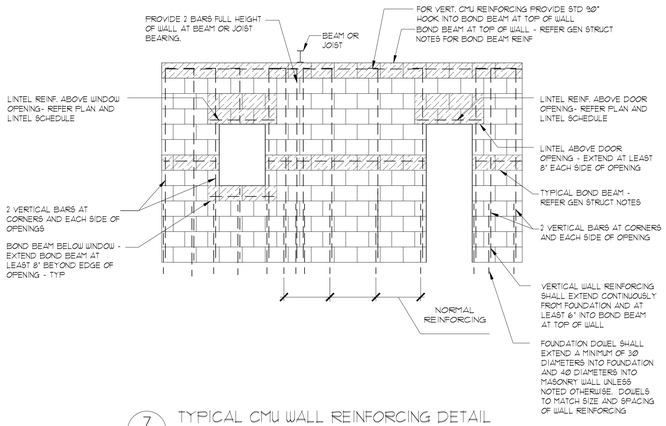

7 S3.1 TYPICAL CMU WALL REINFORCING DETAIL

SCALE: 3/4"= 1'-0"

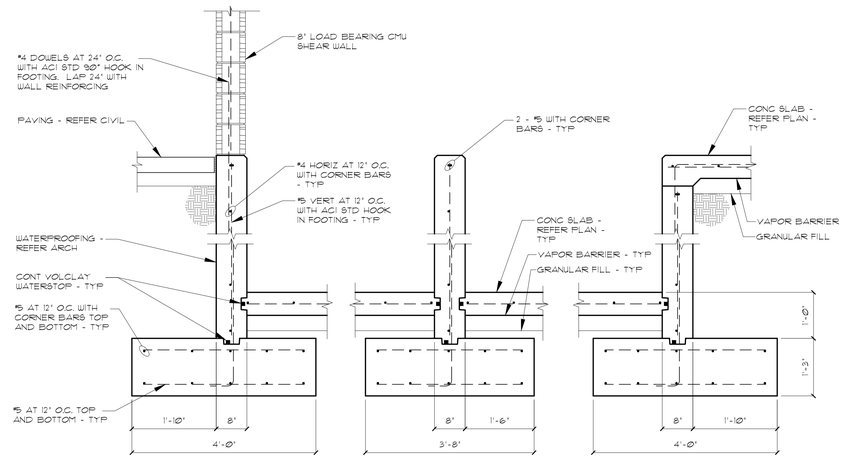

8 S3.1 SECTION

SCALE: 3/4"= 1'-0"

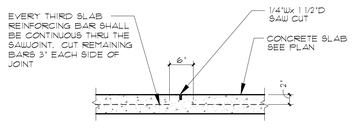

CONTRACTOR NOTE:
SAWCUT JOINTS MAY BE USED ONLY IF CUTS ARE MADE WITH "SOFF CUT" SAW AND CUT AS SOON AS CONCRETE WILL SUPPORT THE WEIGHT OF A MAN AND EQUIPMENT WITHOUT LEAVING IMPRINTS IN CONCRETE.

MARK "SJ." ON PLAN

9 S3.1 SAWCUT JOINT DETAIL

SCALE: NOT TO SCALE

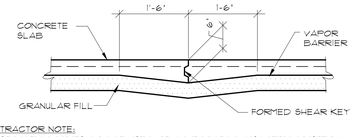

CONTRACTOR NOTE:
CONSTRUCTION JOINTS CAN BE USED AT CONTRACTOR DISCRETION INSTEAD OF SAWCUT JOINTS.

10 S3.1 KEYED CONSTRUCTION JOINT DETAIL

SCALE: NOT TO SCALE

THIS DOCUMENT IS RELEASED WITH THE LIMITATIONS OF NOT FOR CONSTRUCTION FOR THE PURPOSE OF DESIGN DEVELOPMENT REVIEW UNDER THE AUTHORITY OF ROY C. DEAN, OKLAHOMA P.E. No. 19792 ON 6-1-16. THIS MEDIA IS NOT A SEALED DOCUMENT AND SHALL NOT BE USED FOR ANY PURPOSE EXCEPT THAT STATED ABOVE.

TRUMBLE DEAN LLC
STRUCTURAL ENGINEERS
8512 S. PENNSYLVANIA AVE, SUITE A
OKLAHOMA CITY, OKLAHOMA 73159
(405) 848-9202 FAX 848-9204
CERTIFICATE OF AUTHORIZATION NO. 3667
EXPIRATION DATE: JUNE 30, 2017
COPYRIGHT TRUMBLE DEAN LLC 2016

waters edge AQUATIC DESIGN
11205 W. 79th St.
Lenexa, KS 66214
t. 913.438.4338
www.WeDesignPools.com

THE MCKINNEY PARTNERSHIP architects
3600 West Main
Suite 200
Norman, Oklahoma
73072
405.360.1400 p
405.364.8287 f
tmparch.com

Copyright © 2008 The McKinney Partnership Architects, P.C. All Rights Reserved

WESTWOOD FAMILY SWIM COMPLEX

2400 Westport Drive
Norman, OK

Seal:

Date: 06/1/2016	Job #: CM074516
Drawn: RD	Checked: RCD
Issue: DD_REVIEW_SET	

FOUNDATION SECTIONS AND DETAILS

S3.1

Water's Edge Aquatic Design

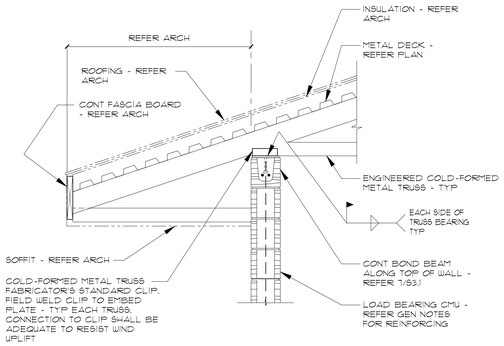

1 S4.1 SECTION

SCALE: 3/4"= 1'-0"

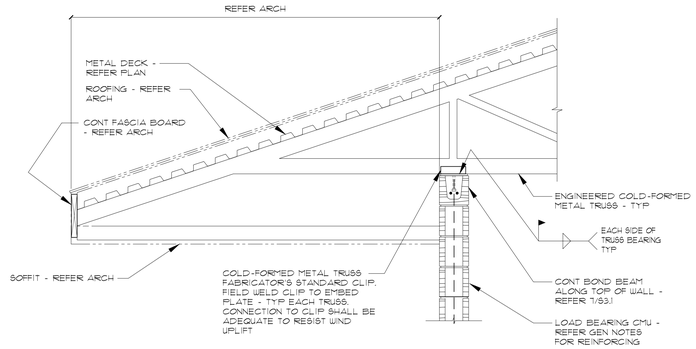

2 S4.1 SECTION

SCALE: 3/4"= 1'-0"

THIS DOCUMENT IS RELEASED WITH THE LIMITATIONS OF NOT FOR CONSTRUCTION FOR THE PURPOSE OF DESIGN DEVELOPMENT REVIEW UNDER THE AUTHORITY OF ROY C. DEAN, OKLAHOMA P.E. No. 19792, ON 6-1-16. THIS MEDIA IS NOT A SEALED DOCUMENT AND SHALL NOT BE USED FOR ANY PURPOSE EXCEPT THAT STATED ABOVE.

TRUMBLE DEAN LLC
STRUCTURAL ENGINEERS
8512 S. PENNSYLVANIA AVE, SUITE A
OKLAHOMA CITY, OKLAHOMA 73159
(405) 848-9202 FAX 848-9204
CERTIFICATE OF AUTHORIZATION NO. 3667
EXPIRATION DATE: JUNE 30, 2017
COPYRIGHT TRUMBLE DEAN LLC 2016

waters edge
AQUATIC DESIGN
11205 W. 79th St.
Lenexa, KS 66214
t. 913.438.4338
www.WeDesignPools.com

THE MCKINNEY PARTNERSHIP
architects
3600 West Main
Suite 200
Norman, Oklahoma
73072
405.360.1400 p
405.364.8287 f
tmparch.com

Copyright © 2006 The McKinney Partnership Architects, P.C. All Rights Reserved

WESTWOOD FAMILY SWIM COMPLEX

2400 Westport Drive
Norman, OK

Seal:

Date: 06/1/2016	Job #: CM074516
Drawn: RD	Checked: RCD
Issue: DD_REVIEW_SET	

FRAMING SECTIONS AND DETAILS

S4.1

Water's Edge Aquatic Design ©