office memorandum

TO: Chairman and Members of the Community Planning and Transportation Committee

FROM: Susan F. Connors, AICP SFC
Director of Planning and Community Development

RE: Development of High Density Zoning District

DATE: January 28, 2013

BACKGROUND

At the December 17, 2012 Community Planning and Transportation (CPT) Committee meeting, members discussed the content of a draft high density residential zoning district that staff is developing at the committee's request. The content of the district is based on public input gathered during the high density summer discussion series and on continuing staff research and CPT committee comment.

During the discussion, members weighed potential conflict between honoring public input favoring less high density and lower building heights with developer's stated requirements for economic viability if design parameters were too restrictive. During public comment, residents of neighborhoods adjacent to Campus Corner spoke of the importance of not allowing new development to overwhelm the existing sense of place of Campus Corner and surrounding areas. Members of Norman's development and business community and developers seeking to build high density residential in the Campus Corner area asked for a specific height limit of 75 feet as opposed to defining height by number of stories. They advocated for the use of Floor-to-Area Ratio (FAR) as a flexible method for regulating building height and mass.

Committee members asked staff to research a numerical definition for the height of a story, to continue investigation of density or FAR as a regulatory technique, and to continue research on issues surrounding the economic viability of high density development in Norman. Lastly the committee asked staff to develop a map for the next meeting more clearly defining a boundary for Campus Corner.

In order to provide City Council with a broader picture from which to make future policy decisions, during the past month staff has consulted with development professionals to gather information about what works and what doesn't when building high density residential developments. We consulted with the firm Ochsner Hare and Hare (OHH), asking them to prepare detailed economic analyses of potential development scenarios that are discussed in detail below.

We toured Richard McKown's Level Urban Apartments in Oklahoma City, a high density, mixed use development he has nearly completed near Bricktown and Deep Deuce. On the 2.66-acre site, which includes 228 studio, 1BR and 2BR

units, McKown found that a four-story building that wraps around an interior parking structure was most economically feasible to build and also created the most attractive streetscape for this urban setting. Level also includes two 2,700-square foot ground-floor commercial units: Native Roots Grocery and a restaurant space that is under construction. Though the development is not yet complete, Level is fully leased with a waiting list of prospective tenants.

Staff also interviewed former two-term Austin, Texas City Council member Brewster McCracken, who was on Council during the time that high density developments targeting students were first being considered in the area west of the University of Texas campus.

McKracken touted the success of multiple West Campus high density developments in Austin, but stressed that before they were built, the city developed an overlay district for high density infill with broad citizen participation and support. The plan established which areas were suitable for higher density redevelopment and which lower density residential areas would be protected. McKracken concludes that having this plan and the overlay zone has allowed strategic redevelopment to proceed with community support and has given property owners confidence that single-family neighborhoods will be protected.

The research outlined in this memo deals most specifically with issues related to development of high density in Campus Corner rather than in other parts of central Norman. This is because recent interest in high density development in Norman has focused in and around Campus Corner so that is the area for which data on development costs is most readily available.

CAMPUS CORNER AREA

Committee members asked staff to provide a map of Campus Corner as a basis for discussion. Campus Corner has never been defined as a district with specific boundaries. Rather it is a district defined by local custom, land use and zoning. Exhibit A is a map depicting two views of Campus Corner boundaries: the Norman 2025 Land Use Plan and Campus Corner as defined by land use as observed by City staff (Exhibit A).

The residential area east of Campus Corner between DeBarr east to the railroad tracks is often referred to as the DeBarr Neighborhood. For CDBG purposes the area is also included in the Larsh-Miller Neighborhood. Though not a locally designated historic district, the DeBarr District was listed on the National Register of Historic Places in 1991. It is an area influenced by Campus Corner and staff is suggesting that regulations that pertain to Campus Corner should be extended to this area.

OHH ANALYSIS

Staff asked the firm OHH to analyze the economic viability of high density residential development in Campus Corner because they are very familiar with Norman having worked with the City on the Porter Avenue Corridor planning

effort in 2008-2010. With a 30+-year track record working with developers throughout the region and the country, OHH was able to serve as a neutral analyst of data provided to staff by developers currently seeking to build high density residential developments in the Campus Corner area.

OHH established a set of assumptions as a basis to perform cash-flow analyses of data provided to City staff by B3 Group, the Elsey Brothers and BLW Architects. These assumptions were tested against achievable rents and amenities demonstrated at Crimson Park, an existing apartment development in Norman. Using those assumptions, OHH conducted a variety of multi-year cash flow analyses based on building heights of four and five stories.

Assumptions

- Land acquisition costs based on developer-provided information
- One-acre site
- Building at 100% lot coverage
- Unit sizes and rents based on developer-provided projections
- A unit mix of roughly 1/3 each of studio, 1BR and 2BR units based on developer-provided projections
- Parking all in a garage; one stall per bedroom
- Financing between 3.5-4.5%
- Seeking industry standard internal rate of return (IRR) of 18% over 18 years as "reasonable", understanding that some projects can/do work with lesser IRR

Why Four-to-Five Stories?

Four and five stories were tested because that is the maximum feasible height for "stick" or wood construction which could include a concrete podium. A concrete podium can be the base of a building or it can serve as a ground floor parking structure. Buildings above five stories require concrete and steel construction which changes the cost dynamics of a project, adding between $5-$12/square-foot to total construction costs.

There was a request made by developers that the allowed height be 75 feet. This is the height allowed before a building is designated as a "High-Rise Building" in the International Building Code (IBC). A "High-Rise Building" must comply with additional regulations in the IBC such as construction type, emergency systems, and elevator installation.

How Tall is a Story?

In most cases, a ground story is between 12-16 feet tall. Upper stories are between 10-13 feet tall. Using these assumptions, the tallest 4-story building would be a maximum of 55 feet high. The tallest 5-story building would be 68 feet high.

OHH created 18 multi-year cash flow scenarios based on data provided to City staff by the three developers, with reference to achievable rents at an existing

Norman apartment development, Crimson Park. Among the 18 scenarios, OHH identified seven that generated positive cash flow or IRR.

Scenario #	Stories	Units/acre	IRR	Finance	Other
12	4	148	13.3%	3.5%	30-year mortgage
12A	4	148	22.2%	3.5%	Assumes $1 land acquisition
13	4	148	9.5%	4.5%	Sale at end of year 10
14	5	175	12.7%	3.5%	30-year mortgage
15	4	148	11.5%	3.5%	30-year mortgage
16A	4	60	11.5%	3.5%	Assumes $1 land acquisition
17A	4	80	12.5%	3.5%	Assumes $1 land acquisition

OHH Findings

- By surveying many developments in many US markets over the past several years, OHH found that an assumed IRR of 18% is the industry standard of economic viability for high density residential/mixed use projects.
- OHH found that the number of units and the height of buildings affect a project's economic viability to a point but beyond that point do not generate higher IRR. e.g. Scenarios 12 and 14 are both financed with 30-year mortgages at 3.5%. Scenario 12 with 148 units generates 13.3% IRR; Scenario 14 with 175 units generates IRR of 12.7%.
- On otherwise identical scenarios, selling at the 10-year mark generates a lower IRR than holding onto the property for 18 years.
- Only Scenario 12A generated an IRR above 18%, making identical assumptions to Scenario 12, with an IRR of 13.3% except that Scenario 12A assumed land acquisition cost of $1.
- Scenarios 16A and 17A demonstrate that it is possible to generate a modest positive cash flow with fewer dwelling units per acre (du/ac)—60 or 80, respectively, roughly half the density of the other scenarios—if land costs are set at $1.

OHH Observations Regarding High Density Development

Informed by the economic analysis, OHH staff made several observations about the prospect of high density development:

- Four primary factors drive the of cost of development, particularly in Campus Corner:
  - Parking garage construction ($13,000-$17,000/stall-$350,000/ level)
  - Land costs

- Density
- Height

- A building height of 55-60 feet (4 stories) would be the minimum height in Campus Corner allowing projects that could be economically viable.
- If 100% lot coverage is allowed so that developers can reach economic goals, then open space requirements can only be met through the use of elevated devices such as balconies and roof-top gardens.
- If the community is to gain any benefit from higher density development at 100% coverage, the architecture must be high quality. Developers themselves also gain value from high quality design.
- The use of stepbacks as a technique to allow additional height while preserving the street wall will negatively effect the overall economic viability of a project.
- Scenario 12A suggests that a unit total between 120-148 units could be economically viable at 18% or above IRR and could be realistic in the current market provided that land costs could be removed from the transaction.
- OHH recommends the administration of higher density zoning in Norman through the use of community-supported design guidelines administered by a Council-appointed Design Review Committee or Architectural Review Board.

PROS AND CONS OF FLOOR-TO-AREA (FAR) VERSUS SPECIFIC DEFINITION OF DENSITY

What is FAR?

Floor-to-Area Ratio is a ratio of a building's floor space compared to total area of a site. It is primarily used to control the overall bulk of buildings and to determine how much of a lot can be covered relative to the height of a building on that lot (Exhibits B-1--B-10). For example, an allowable FAR of 2.0 could mean any of the following are possible development scenarios:

- 2-story building over entire site
- 4-story building over half the site
- 8-story building over one-quarter of the site

The use of FAR began in the early 20th Century in cities with many tall buildings as a way to preserve sunlight into adjacent buildings and onto adjacent streets.

What is a Specific Definition of Density?

Specific definitions of density—e.g. 30 du/ac —is a method of setting limits on the density in a specific area or zoning district. Currently in Norman only the MUD zoning district defines density limits to 30 du/acre.

Since the 1920s, conventional zoning wisdom has held that limiting the density of a district preserves quality of life in that place. However using du/acre can convey a false sense of control over actual density because this measurement addresses neither the number of bedrooms per unit nor the number of cars associated with those bedrooms.

As the table below demonstrates, both methods have strengths and limitations. Neither method addresses height limits for buildings nor do they control any issues related to the compatibility of the building with its surrounding context.

FAR		Density Definition	
Pros	**Cons**	**Pros**	**Cons**
Provides straightforward limits for developers	Does not address form, design or compatibility	Straightforward; measurement is easily understood	Does not address form, design or compatibility
Controls massing of buildings	Encourages stacking of mass in corners to gain height, especially when used with traditional setbacks	Creates predictable environment and development rhythm, particularly in single-family neighborhoods	Does not limit number of bedrooms per unit
Requires fairly basic calculations	Calculations of gross allowable floor area vs. mechanical space can be complex to determine and administer	Establishes predictable setback requirements	Contributes to sprawl by requiring more land to satisfy demand as well as regulatory requirements
Allows flexibility in how a site can be developed	Treats all parcels equally—e.g. a corner parcel is given same visual importance as an interior parcel		Does not limit traffic congestion; instead pushes development further from city center which generates more car trips
Sets height limit of building relative to mass	Does not include explicit height limits		Treats all parcels equally—e.g. a corner parcel is given same visual importance as an interior parcel
			Limits investors' ability to maximize IRR

CONCLUSIONS

1. The minimum height for a higher density building is four stories in order for the project to be economically viable.

2. A building taller than four stories could potentially add amenities such as ground floor retail or enhanced architectural detailing.

3. Density is used more commonly than FAR in ordinances. Neither is perfect and both need to be accompanied by design guidelines to achieve high quality, compatible development.

4. Design guidelines should be flexible to allow for varied architectural styles.

5. Densities at or above 100 du/acre are more likely to achieve a reasonable IRR.

6. Parking garages are necessary to make projects compact on smaller parcels.

7. Given the right location, residents will walk more to surrounding amenities and adding density will attract additional amenities.

8. Density should be located in the right place and locations should be chosen to protect the surrounding area.

9. The four primary drivers of the cost of high density development are:
    a. The cost of land
    b. The density of the project
    c. The height of the buildings
    d. The requirement for the parking garage

EXHIBIT A

High Density Residential: Campus Corner and DeBarr Neighborhood

Map produced by the City of Norman Geographic Information System.

The City of Norman assumes no responsibility for errors or omissions in the information presented.

January 24, 2013

N W E S

0 250 500 Feet

- Campus Corner
- DeBarr Neighborhood
- Parcels

- Proposed Outer Loop
- Very Low Density Residential
- Low Density Residential
- Medium Residential
- High Density Residential
- Office
- Commercial
- Industrial
- Institutional
- County Residential
- Open
- Flood Plain
- park
- Lakepool / Floodway
- Mixed Use

G:\JMcIntosh\Requests\SusanAtkinson\011513_CampusCornerPlanningAreaMap\CampusCornerAndDeBarrNeighborhood_012413.mxd

EXHIBIT B-1

Subject Property

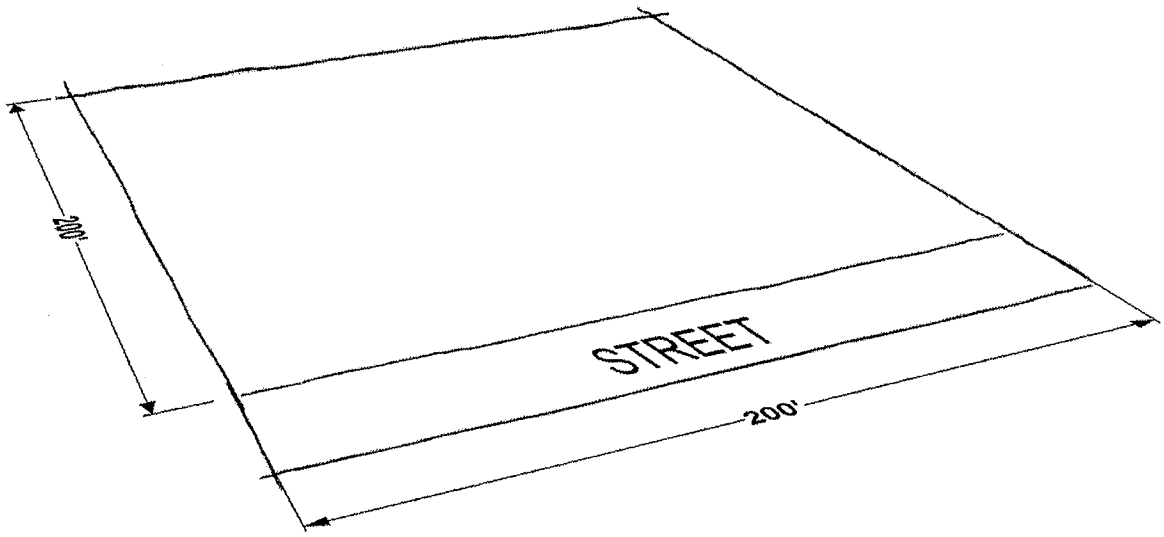

EXHIBIT B-2

FAR 1.0

1 Story Over Entire Site

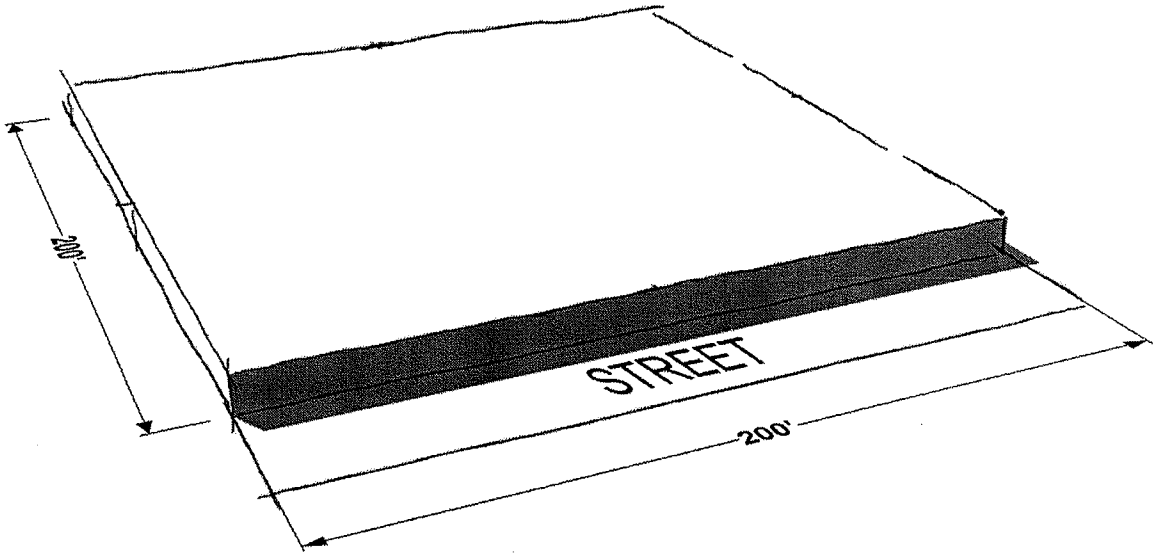

EXHIBIT B-3

FAR 1.0

2 Story on (1/2) Half of Site

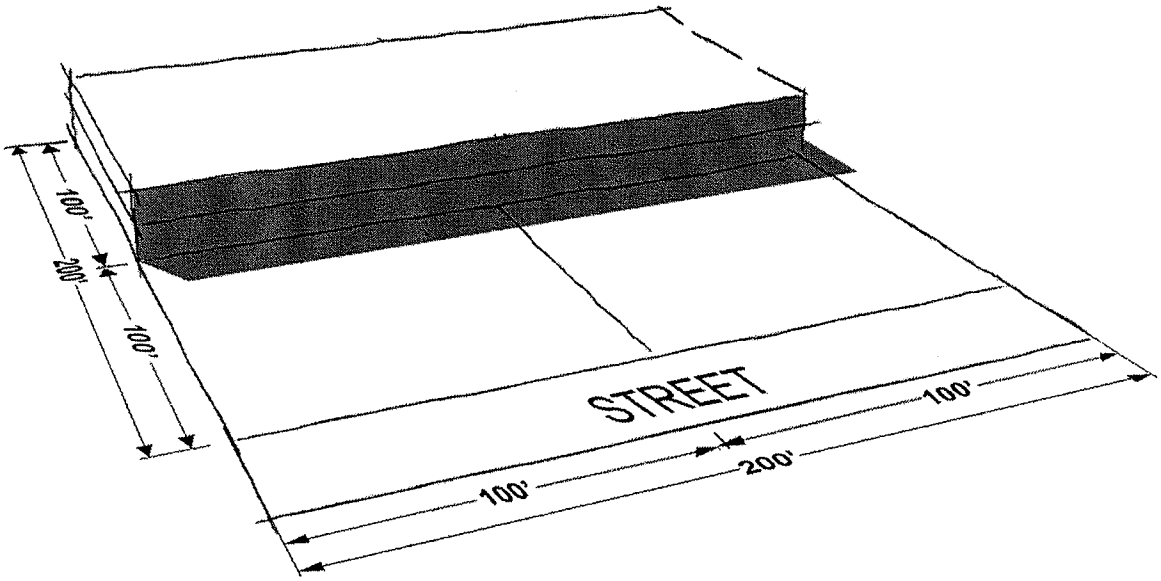

EXHIBIT B-4

FAR 1.0

4 Story on (1/4) One Quarter of Site

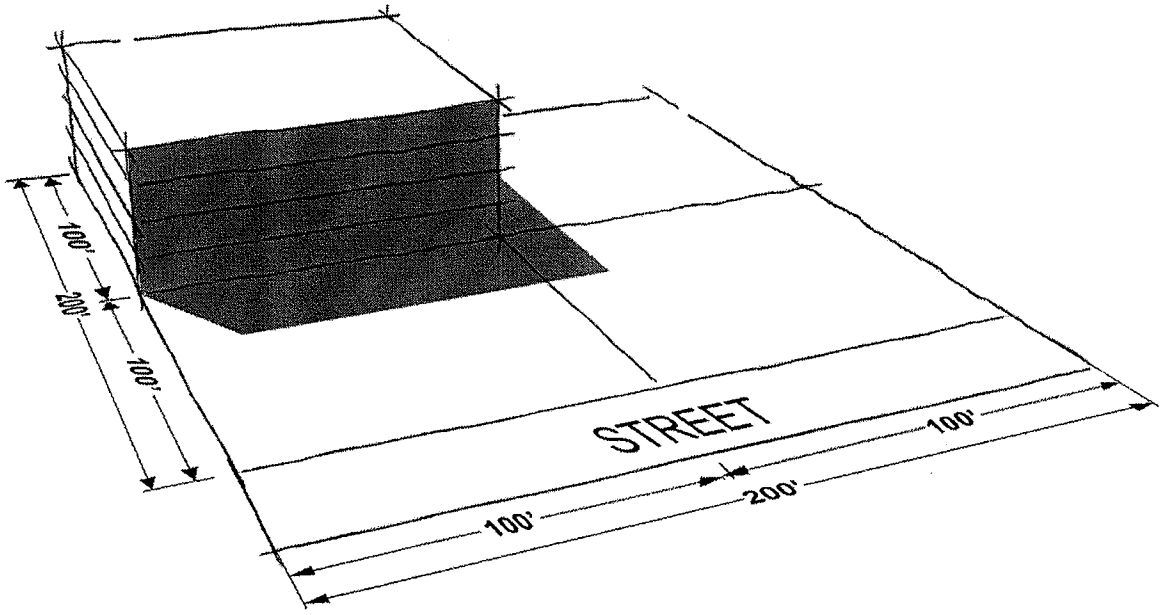

EXHIBIT B-5

FAR 2.0

2 Story Over Entire Site

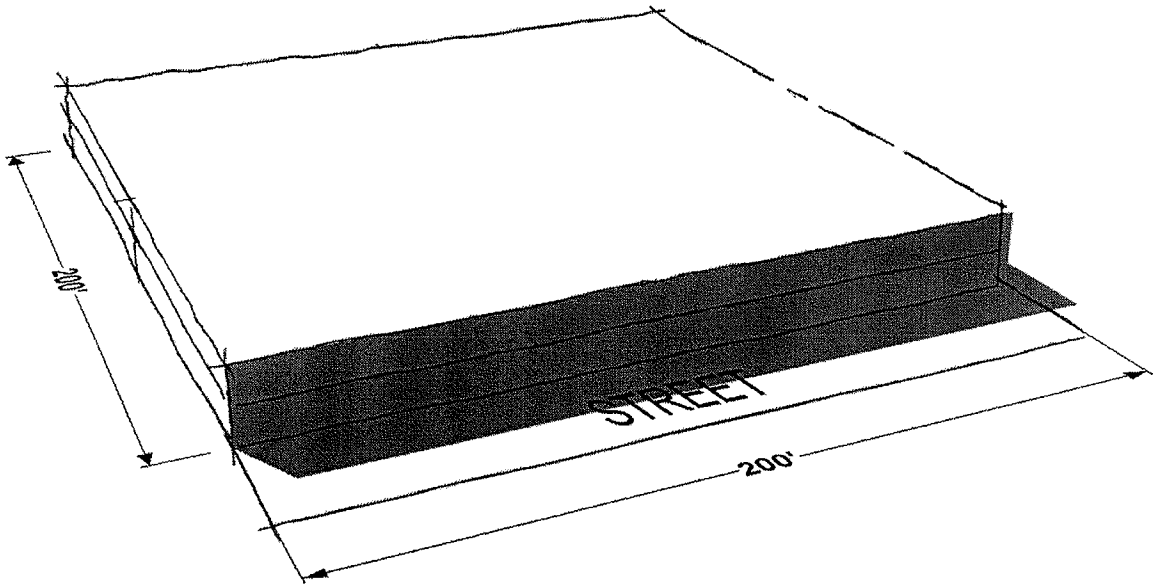

EXHIBIT B-6

FAR 2.0

4 Story Over (1/2) Half of Site

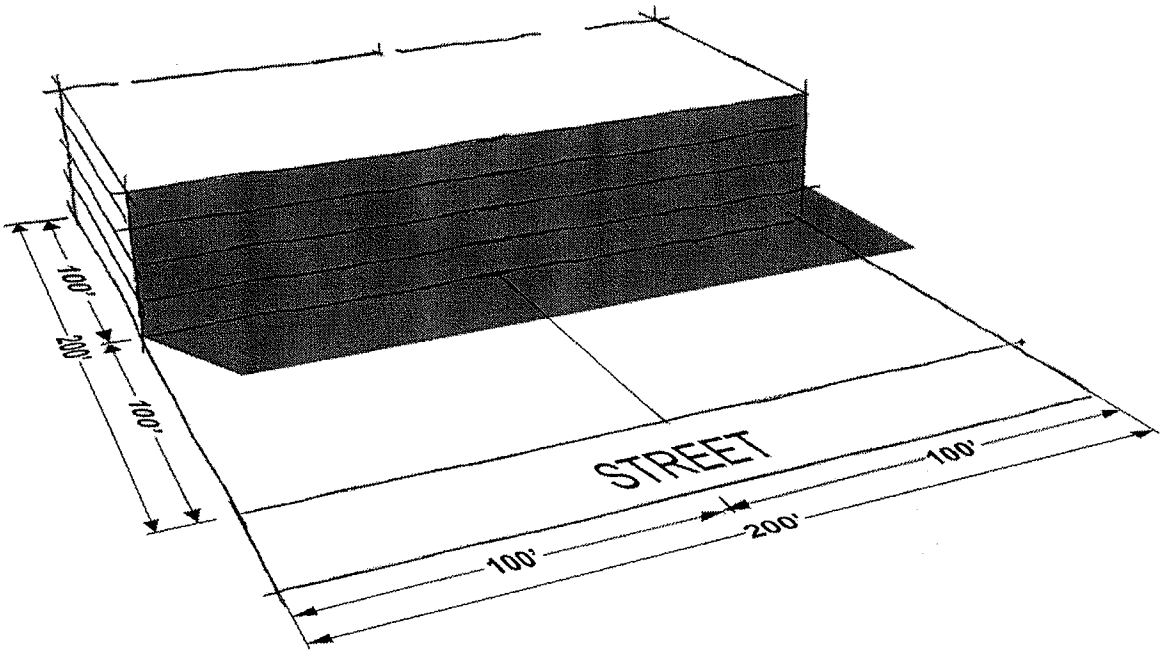

EXHIBIT B-7

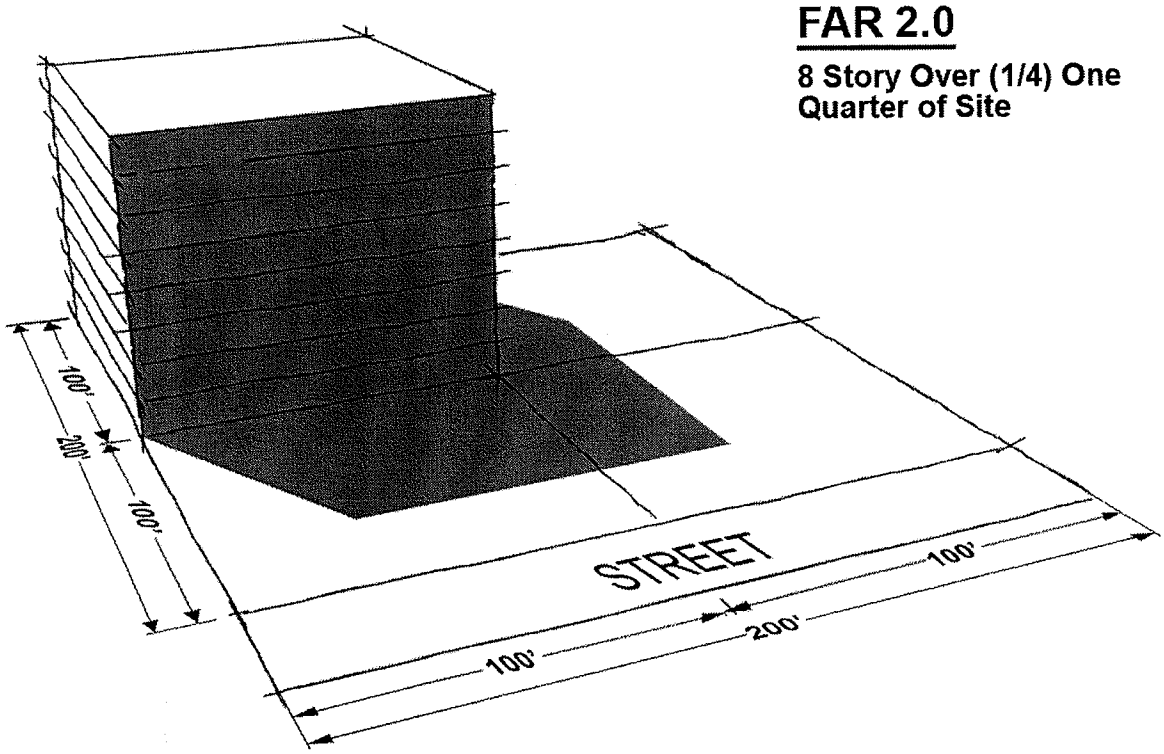
FAR 2.0
8 Story Over (1/4) One Quarter of Site
100'
200'
100'
STREET
100'
200'
100'

EXHIBIT B-8

FAR 4.0

4 Story Over Entire Site

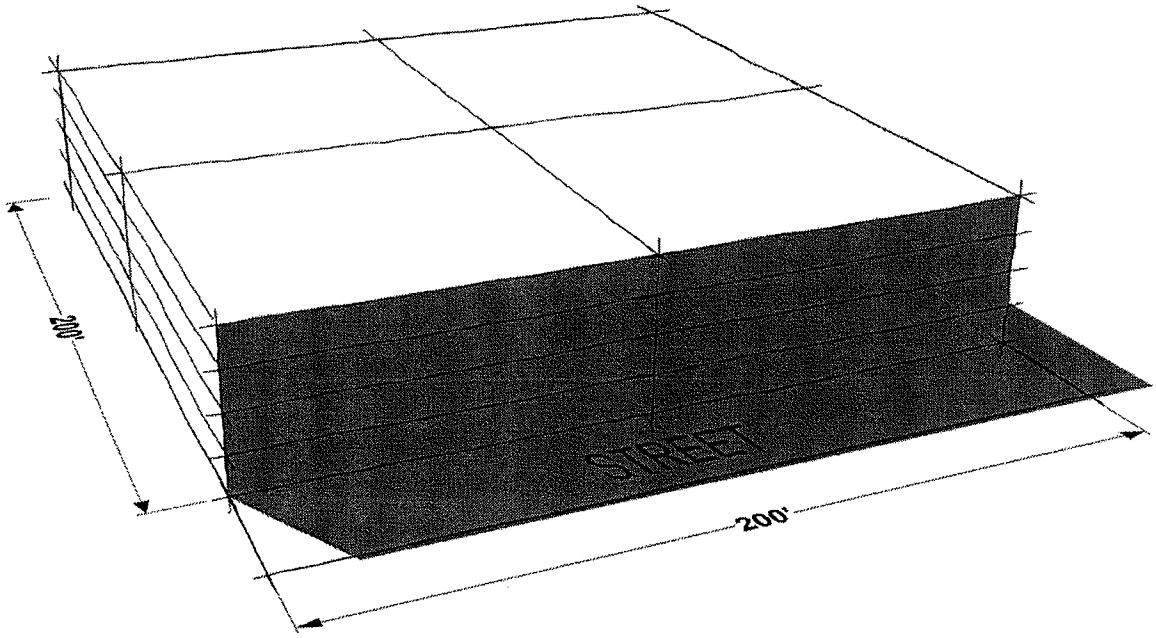

EXHIBIT B-9

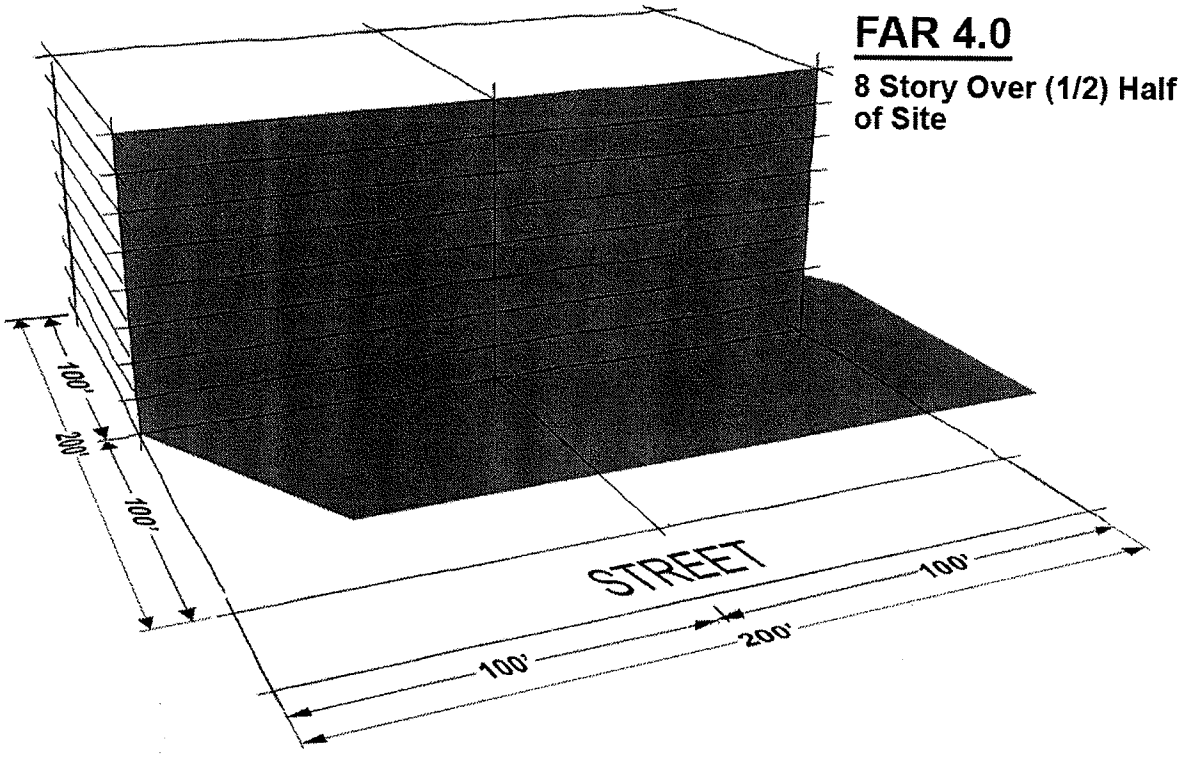
FAR 4.0
8 Story Over (1/2) Half of Site
100'
200'
100'
STREET
100'
200'
100'

EXHIBIT B-10

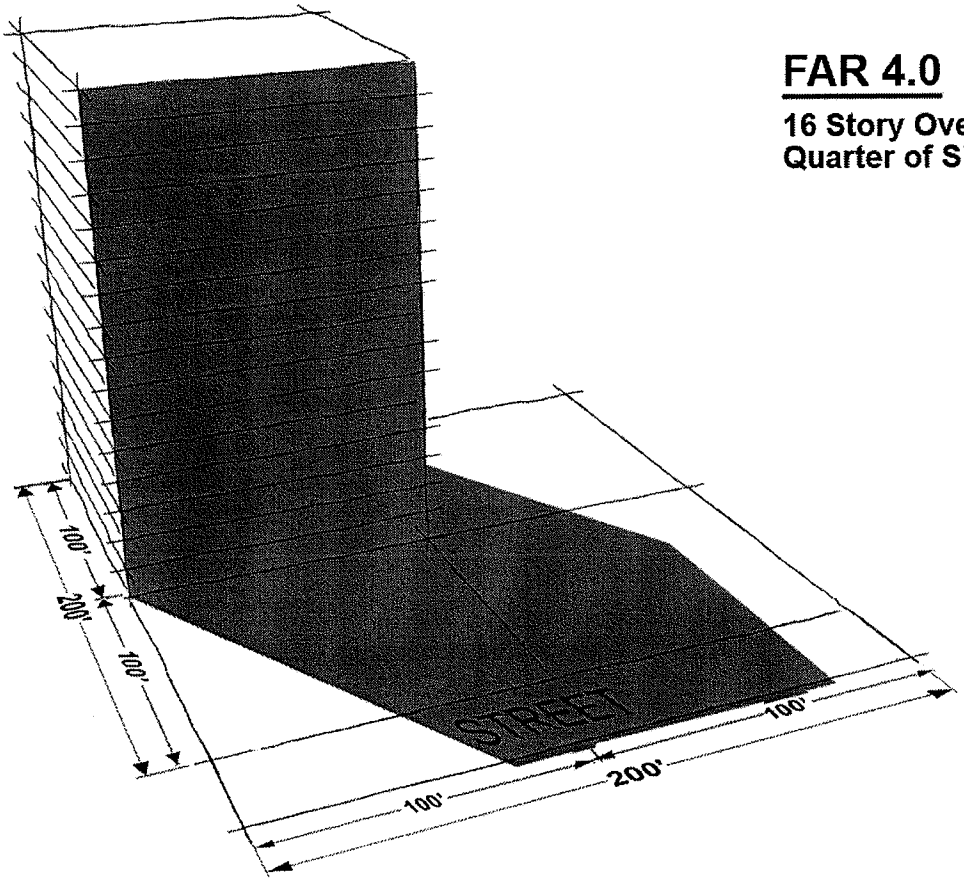

FAR 4.0

16 Story Over (1/4) One Quarter of Site