PIPE INSIDE DIAMETER		STANDARD TRENCH WIDTH	
MM	IN.	MM	IN.
≤375	≤15	900	36
450	18	900	36
525	21	1,050	42
600	24	1,050	42
675	27	1,200	48
750	30	1,200	48
900	36	1,350	54
1,050	42	1,500	60
1,200	48	1,650	66
1,350	54	1,800	72
1,500	60	1,950	78
1,650	66	2,100	84

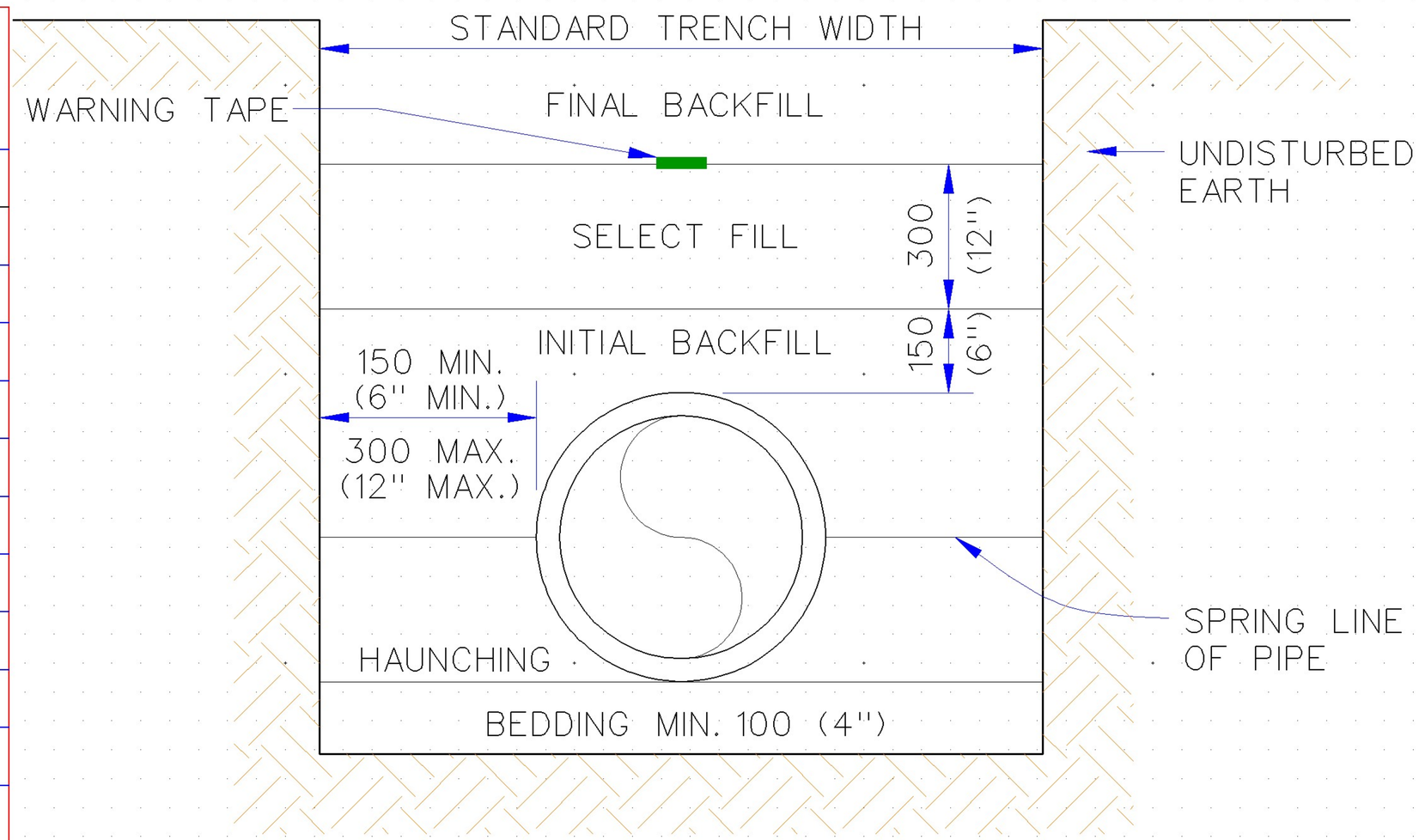

BEDDING MATERIALS

BACKFILL DESCRIPTION	NON-PAVED AREAS			PAVED AREAS (See Note 7)		
	PVC	DIP	HDPE	PVC	DIP	HDPE
FINAL BACKFILL	EXCAVATED MATERIAL	EXCAVATED MATERIAL	EXCAVATED MATERIAL	SBM	SBM	SBM
SELECT BACKFILL	SELECT FILL (SF)	SELECT FILL	SELECT FILL	SBM	SBM	SBM
INITIAL BACKFILL	COVER ≤10' SF >10' SBM	COVER ≤10' SF >10' SF	COVER ≤10' SF >10' SBM	SBM	SBM	SBM
HAUNCHING	COVER ≤10' SBM >10' SBM	COVER ≤10' SF >10' SBM	COVER ≤10' SBM >10' SBM	SBM	SBM	SBM
BEDDING	See Note 5	See Note 5	See Note 5	See Note 5	See Note 5	See Note 5

NOTES:

1. BACK FILLING FOR PVC PIPE SHALL MEET THE REQUIREMENTS OF ASTM D 2321.
2. SELECT FILL CONSISTS OF EXCAVATED MATERIALS CONTAINING NO ROCKS LARGER THAN 50 MM (2").
3. STANDARD BEDDING MATERIAL (SBM) SHALL CONFORM TO ODOT 703.01, TYPE A AGGREGATE BASE, OR FLOWABLE FILL PER SECTION 501.02(B).
4. COMPACTION REQUIREMENTS:
   a. NON- PAVED AREAS: 90% MAXIMUM STANDARD PROCTOR DENSITY FOR COHESIONLESS SOILS AND 85% FOR COHESIVE SOILS.
   b. PAVED AREAS: 95% MAXIMUM STANDARD PROCTOR DENSITY FOR COHESIONLESS SOILS.
5. IF TRENCH IS DRY BEDDING SHALL BE 100 MM (4") TYPE A AGGREGATE BASE, AND IF WET SHALL BE NO. 57 OR NO. 67 ROCK PER SECTION 701.06(C).
6. NO WATER JETTING ALLOWED UNDER PAVEMENT.
7. THE BACKFILL MATERIAL SHALL EXTEND A MINMUM OF 2-FEET BEHIND THE BACK OF CURB, OR THE EDGE OF PAVEMENT WHERE NO CURB EXISTS.
8. WARNING TAPE SHALL BE INSTALLED ABOVE ALL NEW AND REHABILITATED UNDERGROUND PIPING AFTER PLACEMENT OF SELECT BACKFILL AS PER SECTION 2506.1(J).

METRIC UNITS ARE IN MM WITH ENGLISH UNITS IN PARENTHESIS, UNLESS INDICATED OTHERWISE.

SANITARY SEWER PIPE TRENCHING AND BEDDING

City Engineer Approval:		CITY OF NORMAN, OKLAHOMA	
Approval Date:	Revision Date: 1-30-2006	Rev. No. 6	DRAWING NO. SS 01

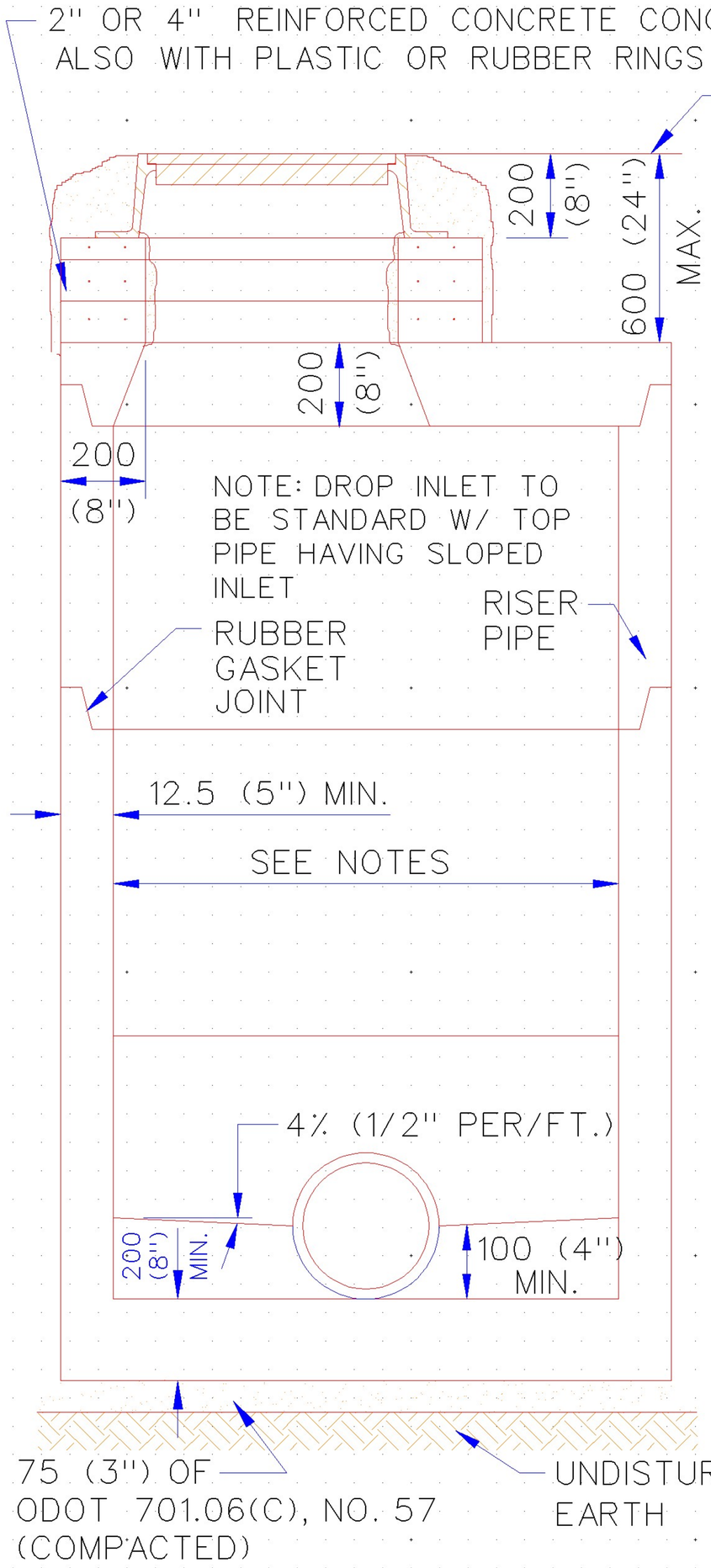

PRECAST MANHOLE
FLAT TOP

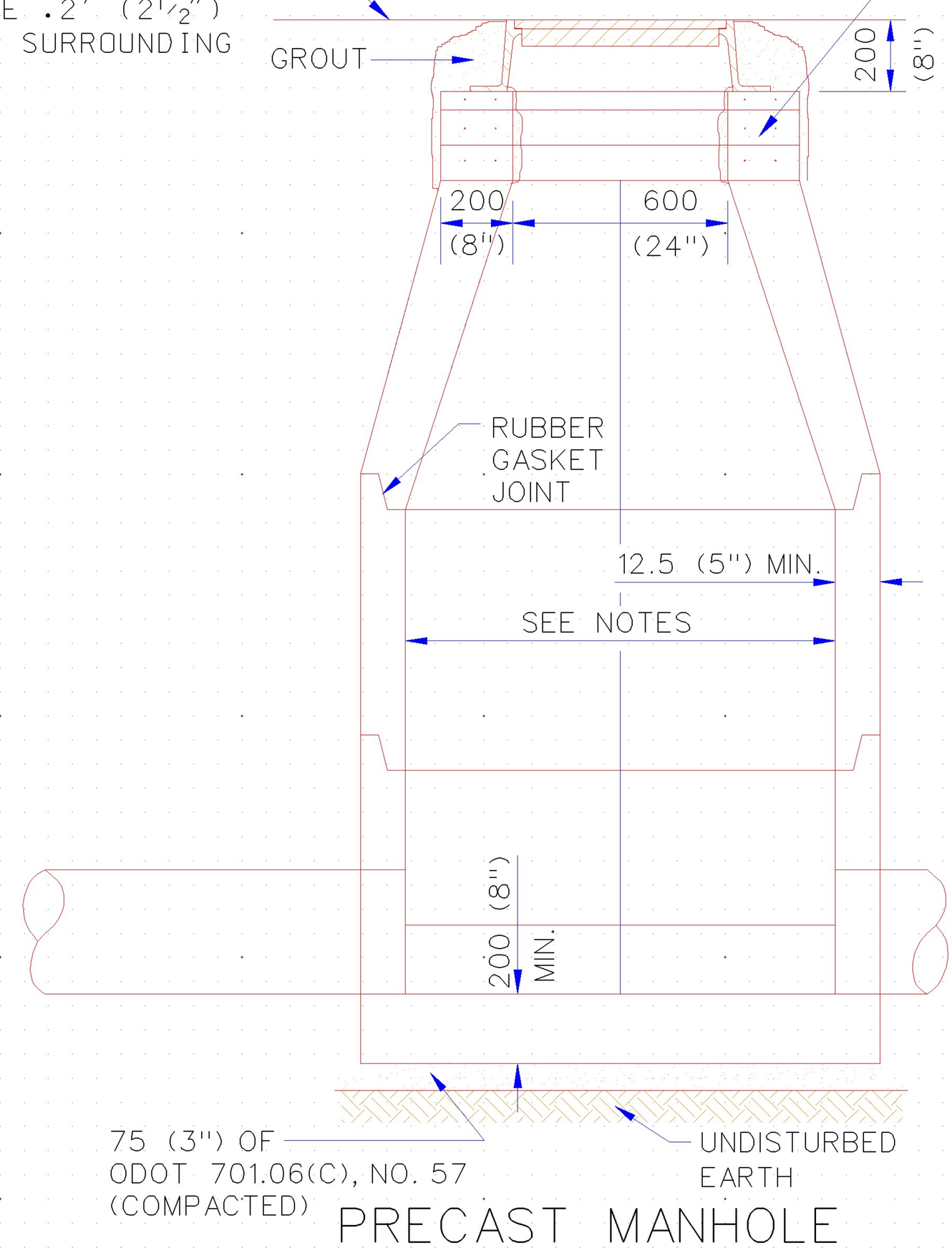

PRECAST MANHOLE
TAPERED TOP

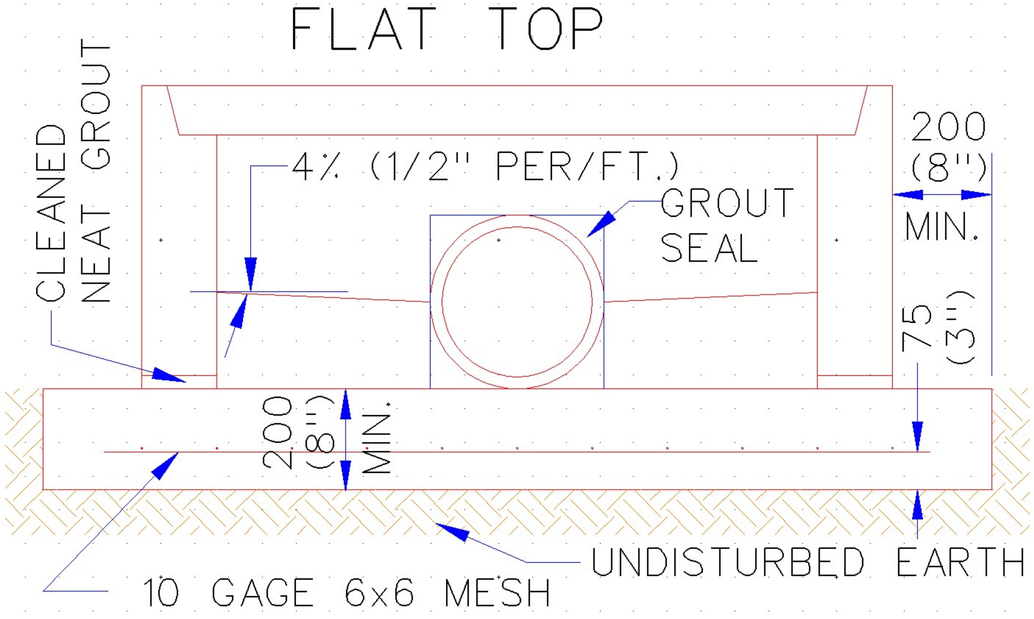

CAST-IN-PLACE BASE

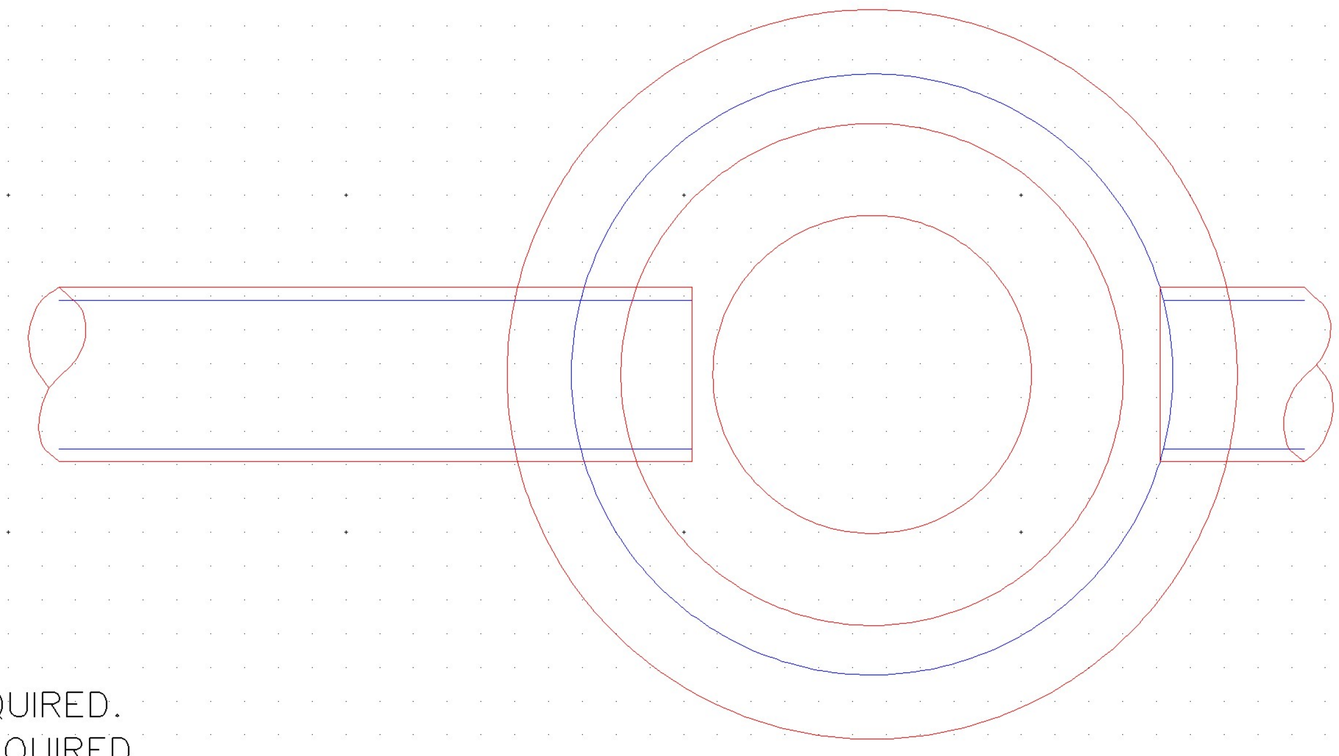

STANDARD MANHOLE

NOTES:

1. MH SHALL CONFORM TO CURRENT ASTM C478.
2. 200 (8") TO 450 (18") PIPE, 1200 (4') ID MANHOLE REQUIRED.
3. 525 (21") TO 675 (27") PIPE, 1500 (5') ID MANHOLE REQUIRED.
4. OVER 675 (27") PIPE MANHOLE ID AS SPECIFIED BY ENGINEER.
5. MANHOLES LESS THAN 1350 (4'-6") IN HEIGHT SHALL HAVE A FULL 1200 (4') ID OR LARGER FROM TOP TO BOTTOM.
6. MIN. CONCRETE STRENGTH TO BE ODOT CLASS A, 20.7 MPa (3000 PSI).
7. IN ASPHALT STREETS, MANHOLES SHALL HAVE 1200 X 1200 X 200 (4'X4'X8") CONCRETE COLLARS W/4-#6 REINFORCING BARS.

METRIC UNITS ARE IN MM WITH ENGLISH UNITS IN PARENTHESIS, UNLESS INDICATED OTHERWISE.

PRECAST MANHOLE

City Engineer Approval:		CITY OF NORMAN, OKLAHOMA	
Approval Date:	Revision Date: 6-09-2006	Rev. No. 1	DRAWING NO. SS 02

M.H. TOP ADJUSTMENT SHALL BE ACCOMPLISHED BY THE USE OF 50 (2") OR 100 (4") REINFORCED CONCRETE CONCENTRIC RINGS PLASTERED WITH 6 MM (1/4") GROUT, OR RUBBER RINGS WITH SEALER AS FINISH GRADE REQUIRES.

TOP OF MANHOLE RING TO BE 0.2' (2½") ABOVE THE SURROUNDING GROUND

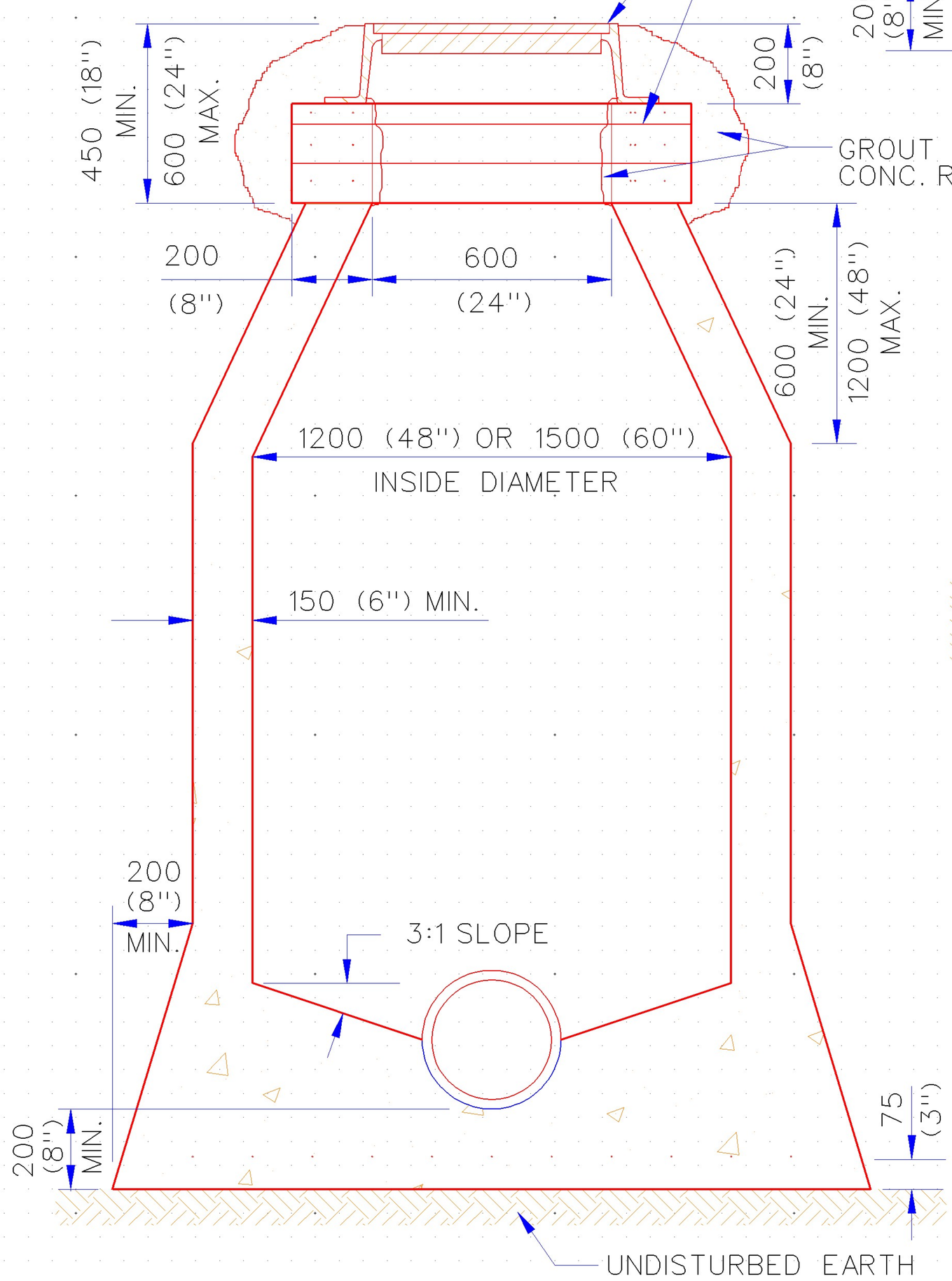

MONOLITHIC CONSTRUCTION

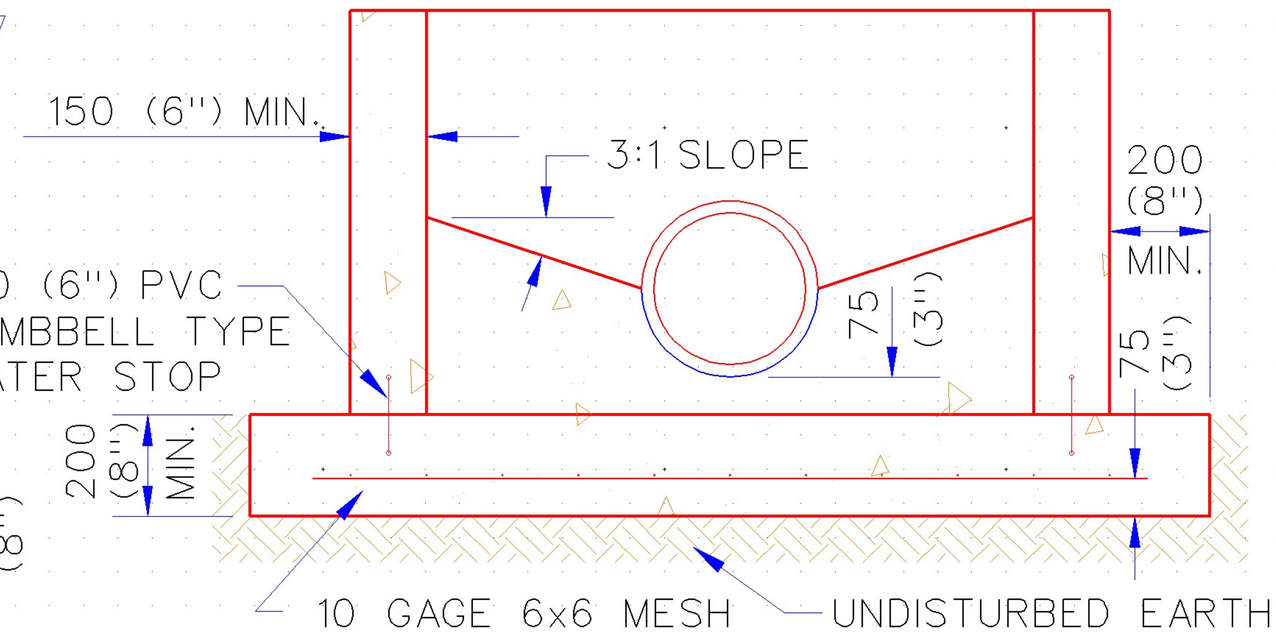

STAGE CONSTRUCTION
ALTERNATE 1

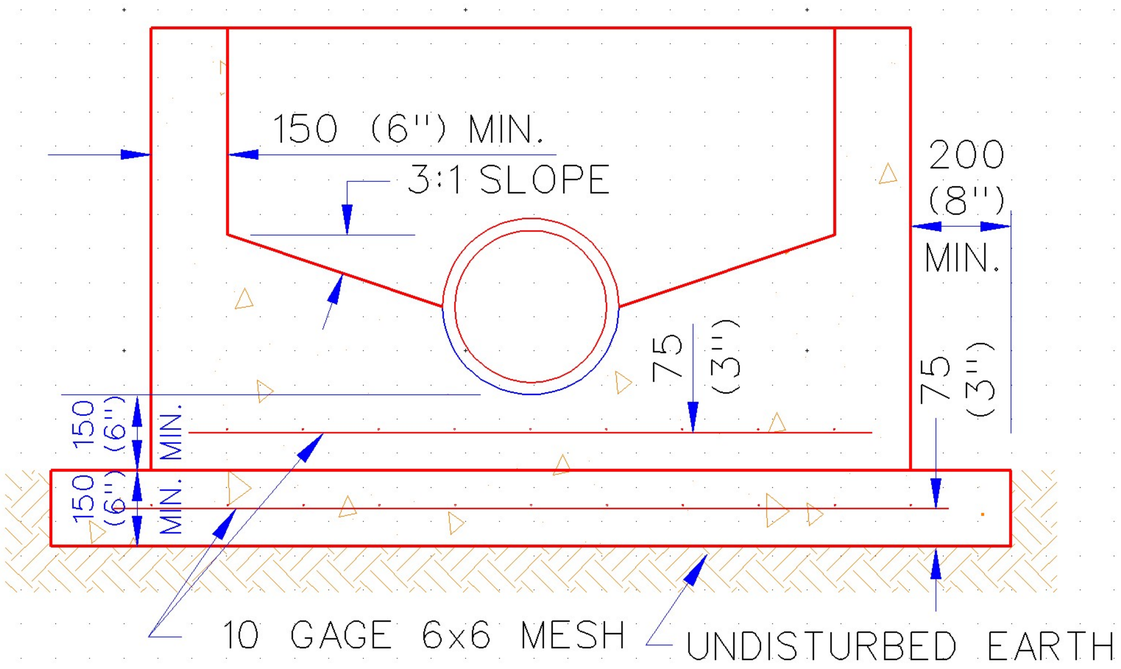

STAGE CONSTRUCTION
ALTERNATE 2

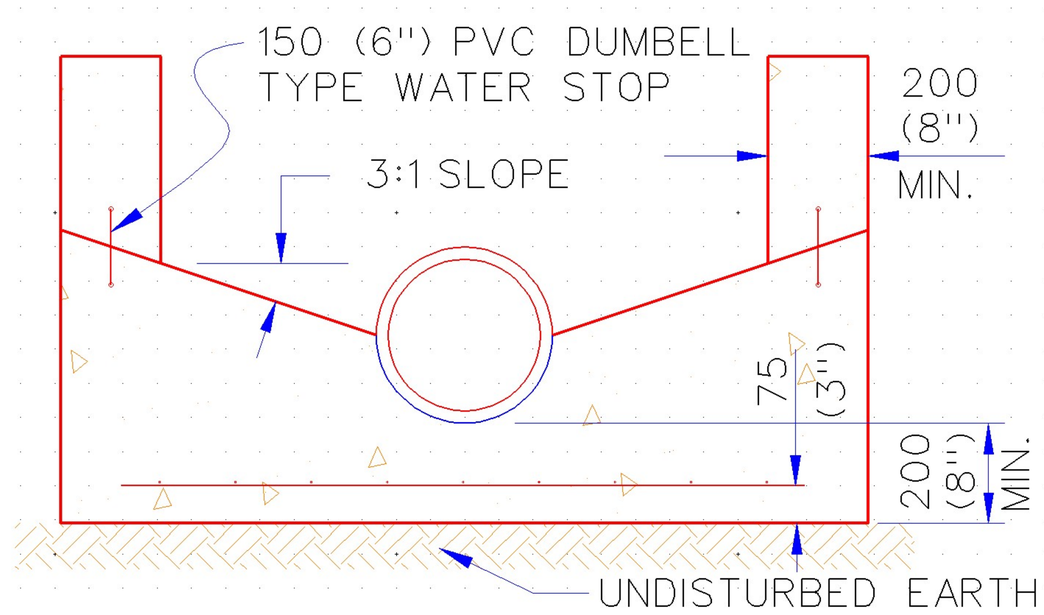

STAGE CONSTRUCTION
ALTERNATE 3

NOTES:

1. LOW SLUMP CONCRETE SHALL BE PLACED IN THE FOOTINGS AND LOWER WALLS, AND SHALL BE PLACED AND VIBRATED IN 300 MM (1') LIFTS.
2. AN INSPECTOR MUST BE PRESENT BEFORE AND DURING THE PLACING OF THE CONCRETE.
3. THIS MANHOLE SHALL NOT BE USED IN PAVED STREETS OR OTHER TRAVELED AREAS.
4. THE CONCRETE MUST SET FOR 48 HOURS BEFORE PIPE INSIDE OF MANHOLE IS TRIMMED.
5. ALTERNATE 3 INVERT MUST BE FORMED AT TIME OF BOTTOM POUR.
6. WATER STOPS MAY BE ELIMINATED IF BARREL OF MANHOLE IS POURED WITHIN 4 HOURS AFTER BASE IS CLEANED OF ALL MUD, SILT AND DEBRIS.
7. MIN. CONCRETE STRENGTH TO BE ODOT CLASS A, 20.7 MPa (3000 PSI).
8. IN ASPHALT STREETS, MANHOLES SHALL HAVE 1200X1200X200 (4'X4'X8") CONCRETE COLLAR W/4-#6 REINFORCING BARS.
9. 200 (8") TO 450 (18") PIPE, 1200 (4') MANHOLE REQUIRED.
10. 525 (21") TO 675 (27") PIPE, 1500 (5') MANHOLE REQUIRED.
11. OVER 675 (27") PIPE, MANHOLE I.D. SPECIFIED BY ENGINEER.

METRIC UNITS ARE IN MM WITH ENGLISH UNITS IN PARENTHESIS, UNLESS INDICATED OTHERWISE.

CAST IN PLACE MANHOLE

City Engineer Approval:		CITY OF NORMAN, OKLAHOMA	
Approval Date:	Revision Date: 6-09-2006	Rev. No. 4	DRAWING NO. SS 03

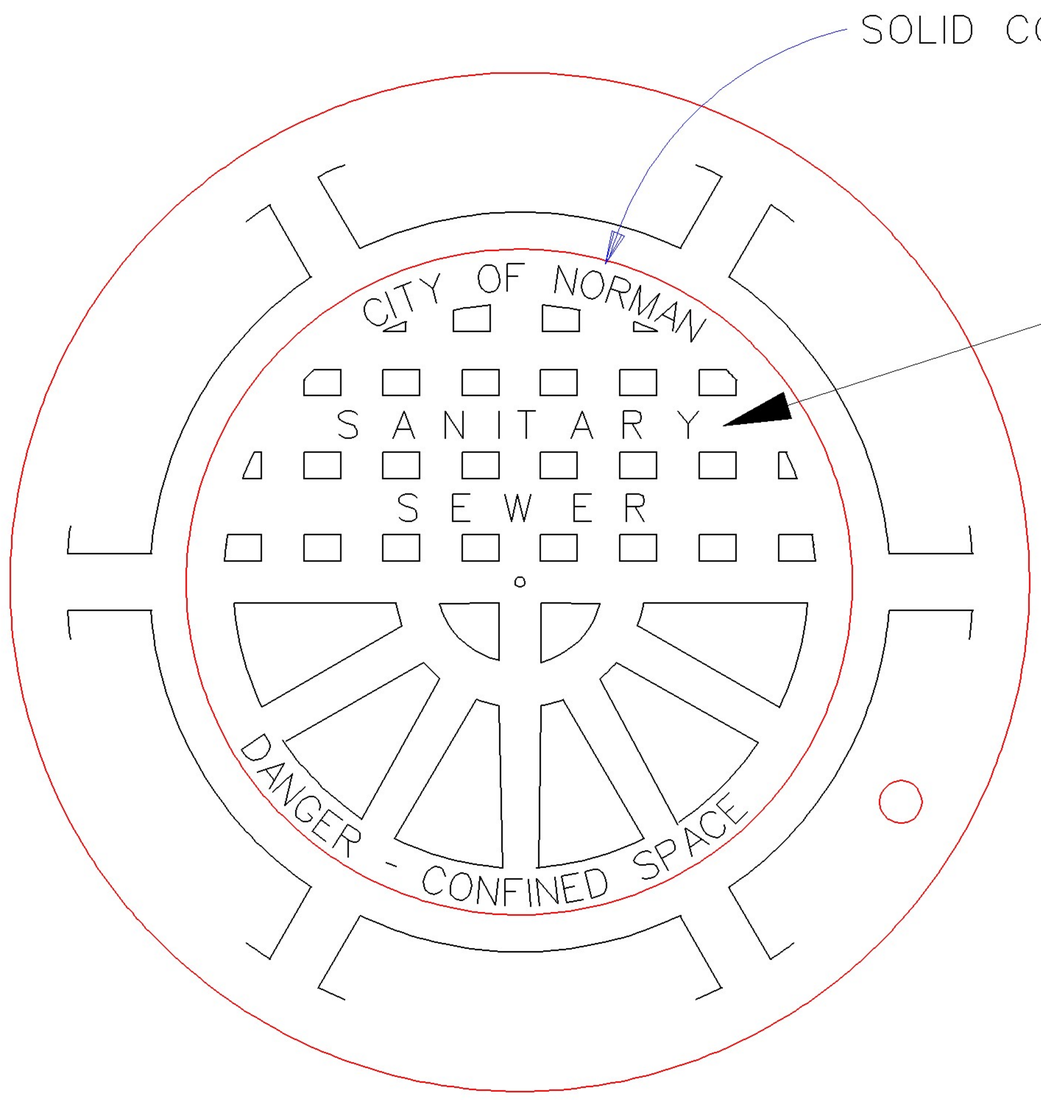

LETTERING

* CITY OF NORMAN (OPTIONAL)
* SANITARY SEWER
* CONFINED SPACE ADVISORY

PLAN

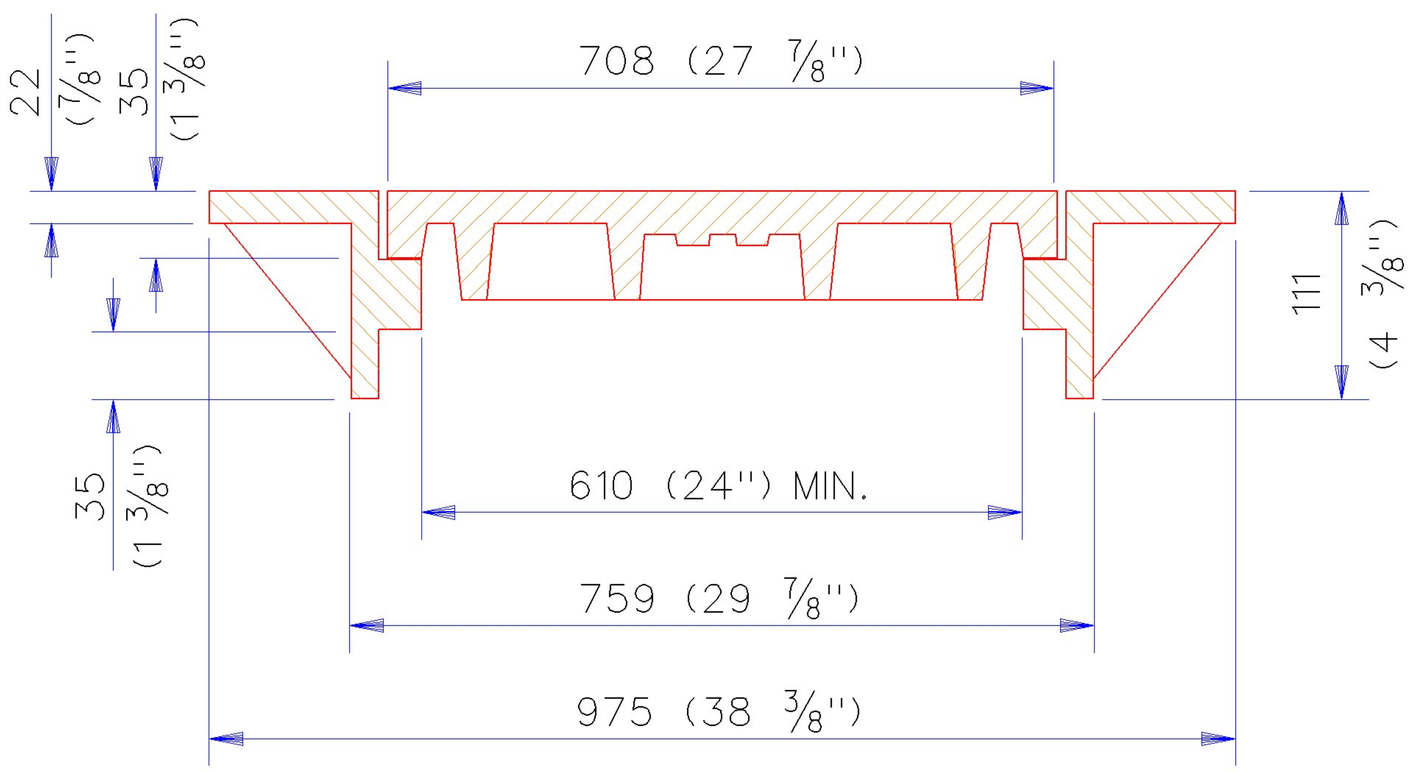

SECTION

NOTES:

1. ACCEPTABLE UNITS:
   - NEENAH NO. R-1682
   - WESTERN NO. 100
   - PONT-A-MOUSSON NO. GTS, CLASS 400
   - EAST JORDAN IRON WORKS 2100 CSE

METRIC UNITS ARE IN MM WITH ENGLISH UNITS IN PARENTHESIS, UNLESS INDICATED OTHERWISE.

MANHOLE FRAME AND COVER

City Engineer Approval:		CITY OF NORMAN, OKLAHOMA	
Approval Date:	Revision Date: 2-08-2006	Rev. No. 2	DRAWING NO. SS 04

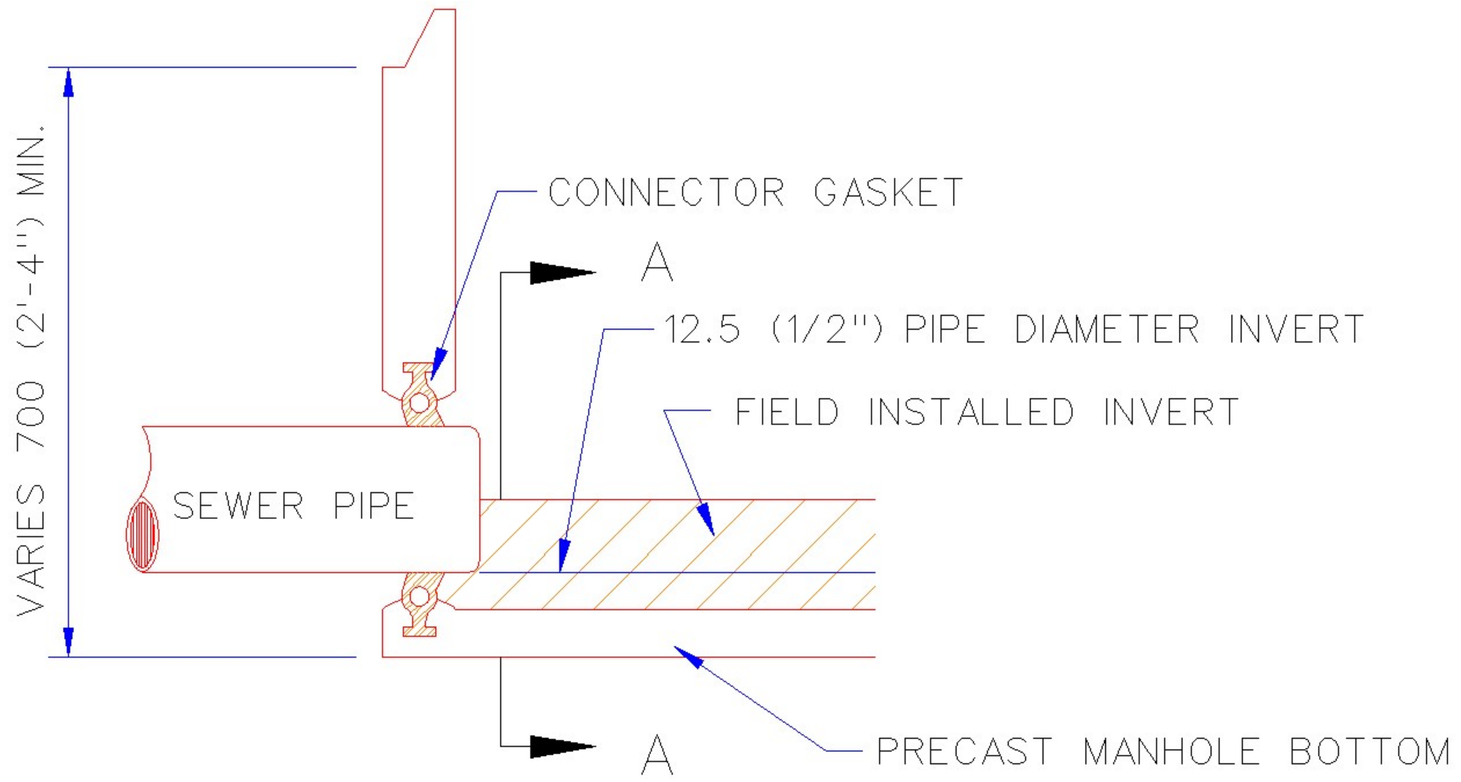

TYPE A MANHOLE

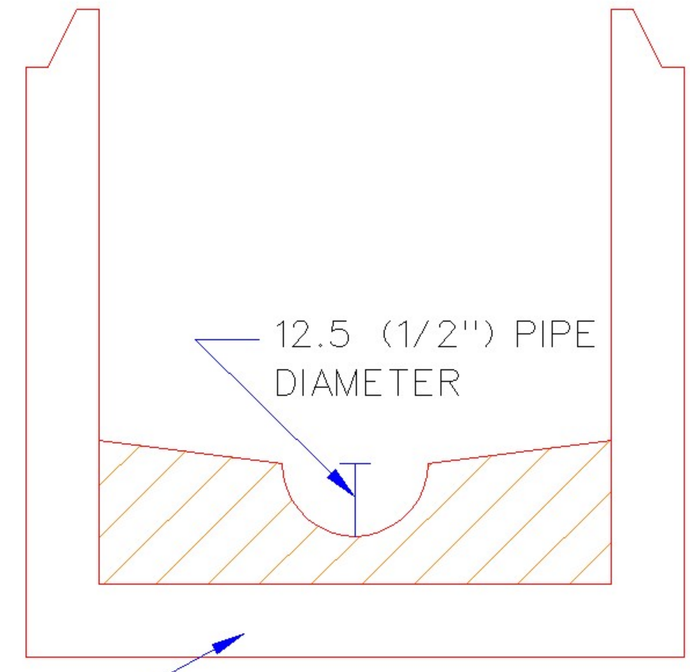

SECTION A-A

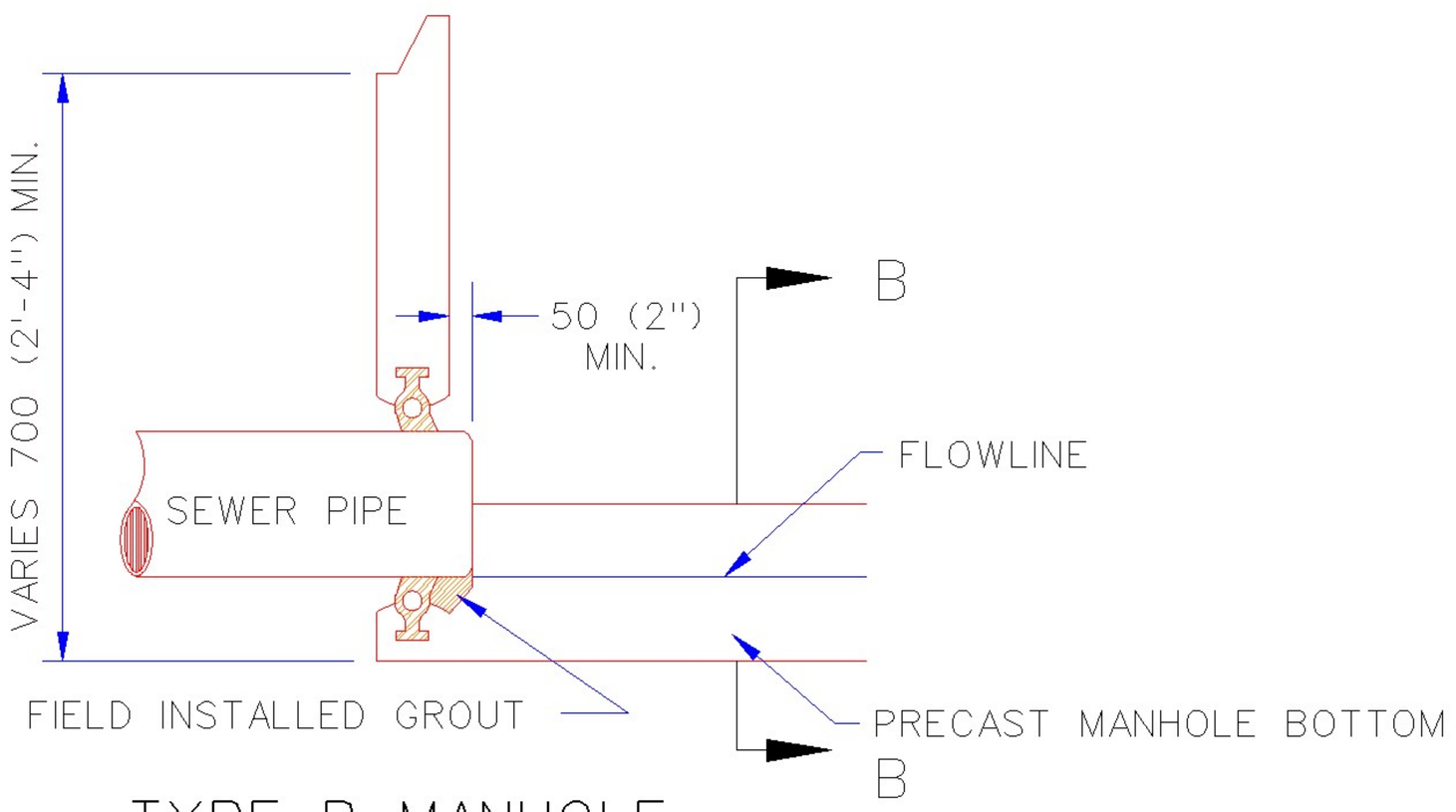

TYPE B MANHOLE

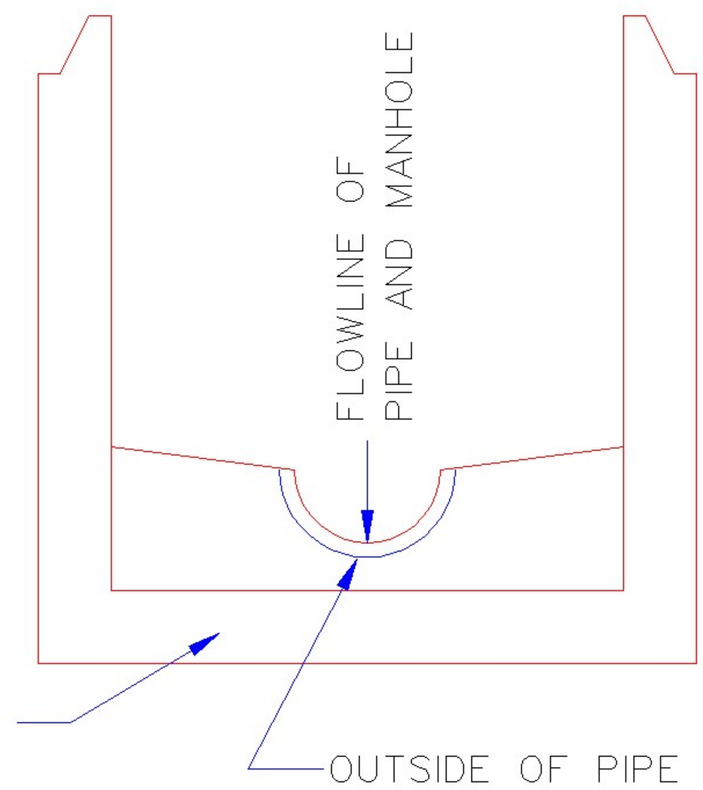

SECTION B-B

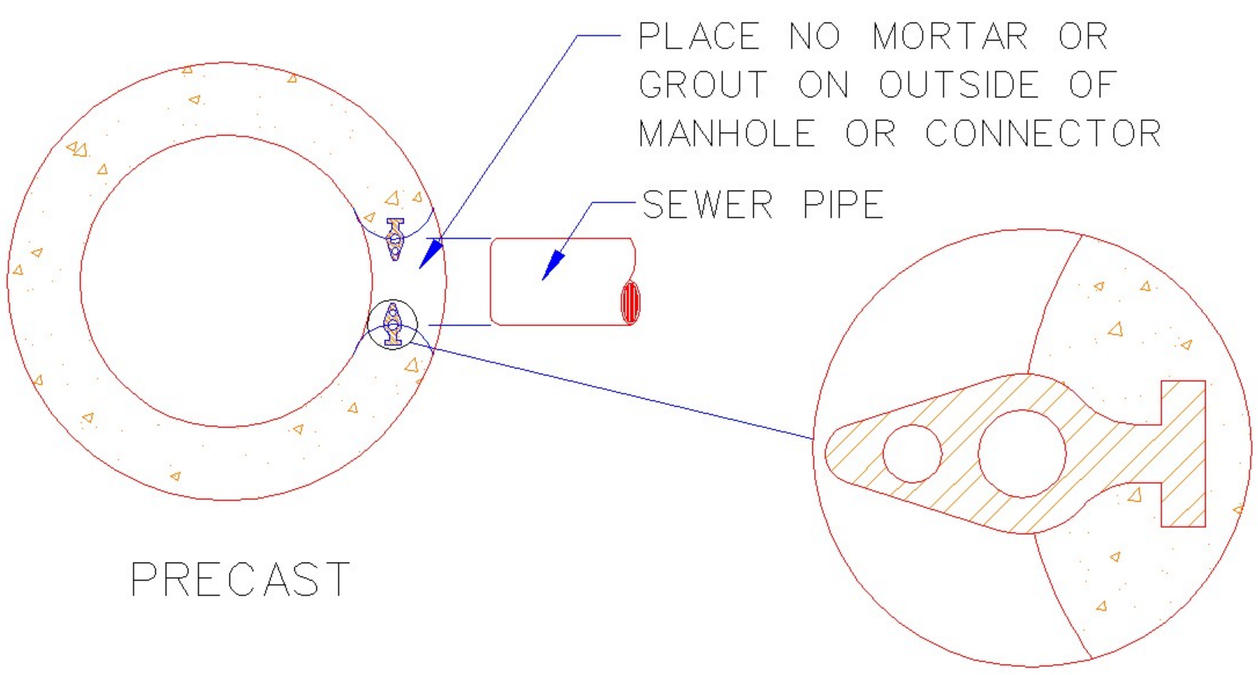

PRECAST

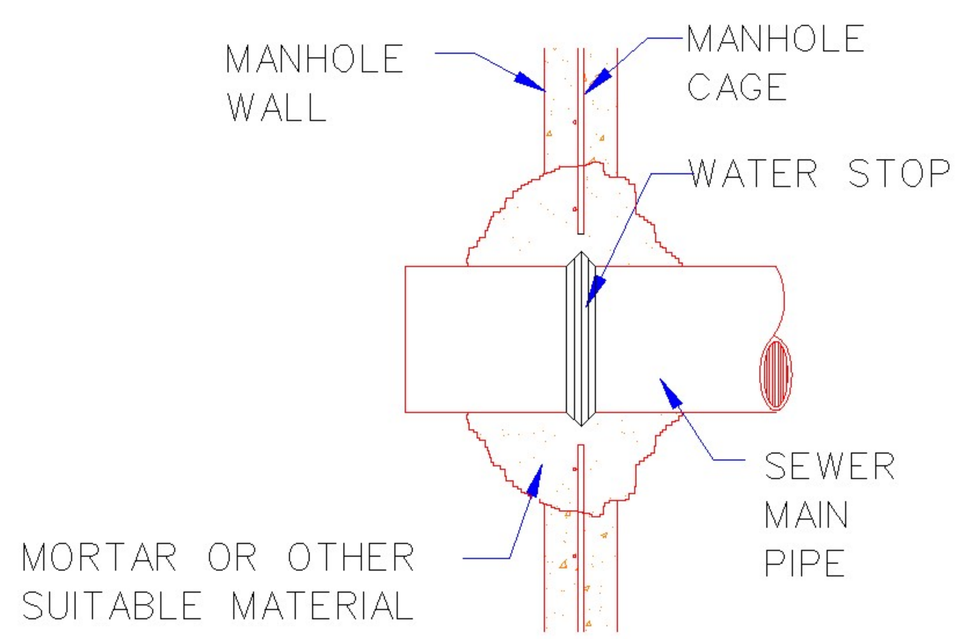

INSTALLED IN THE FIELD

METRIC UNITS ARE IN MM WITH ENGLISH UNITS IN PARENTHESIS, UNLESS INDICATED OTHERWISE.

MANHOLE CONNECTIONS

City Engineer Approval:		CITY OF NORMAN, OKLAHOMA	
Approval Date:	Revision Date:	Rev. No. 0	DRAWING NO. SS 05

NOTES:
1. SLIDING TRENCH SUPPORTS SHALL NOT BE PLACED BELOW THE TOP OF PIPE.
2. WATER TABLE CRADLE SHALL BE INSTALLED FOR THE FULL WITH OF THE TRENCH EXCAVATION.
3. FOR RIGID PIPES USE THE STD. TRENCH WIDTH (SS 01). SEE TABLE FOR FLEXIBLE PIPES

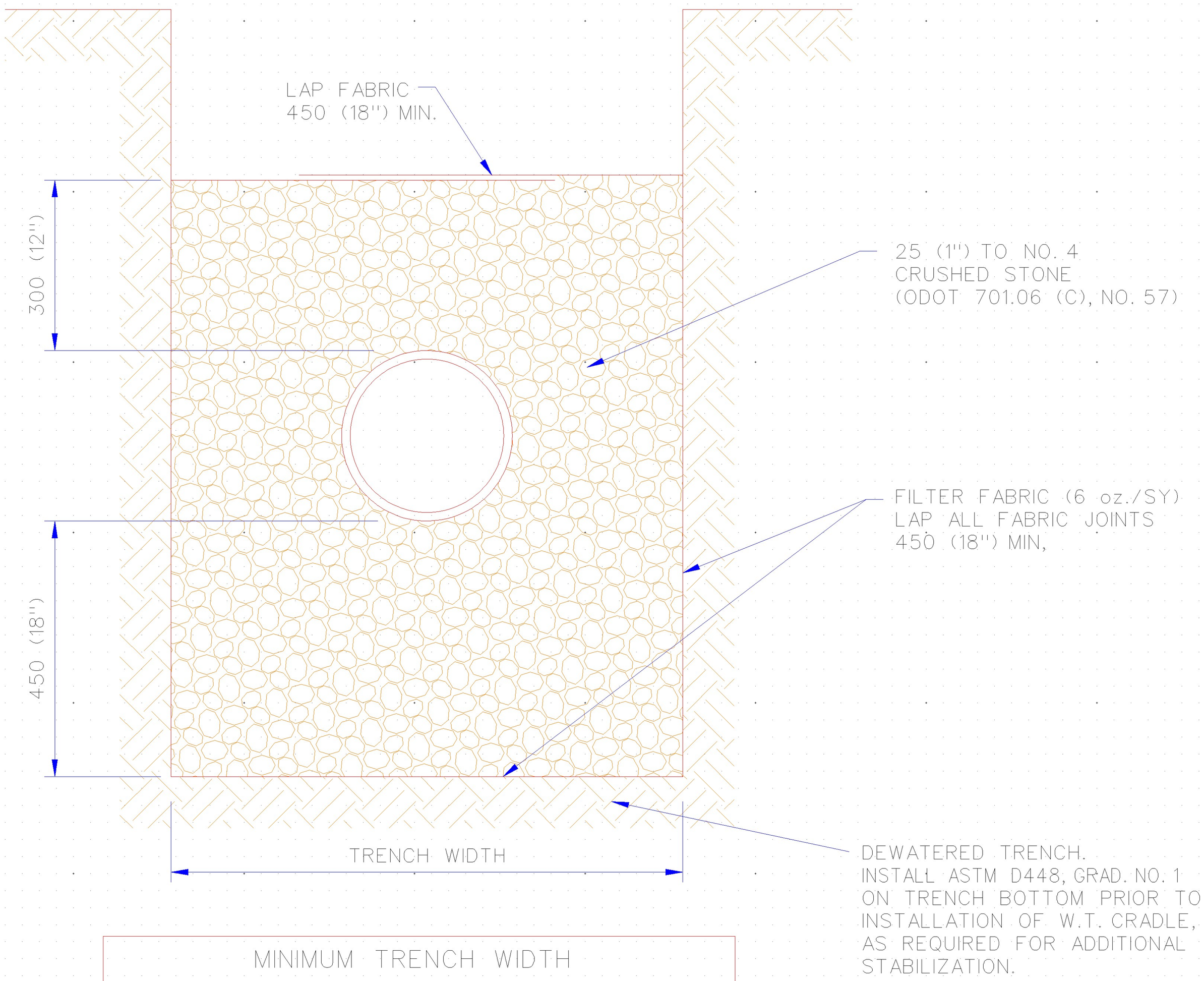

MINIMUM TRENCH WIDTH
FOR FLEXIBLE PIPES

PIPE I.D.		MIN. TRENCH WIDTH	
MM	IN.	M	FT.
200 - 300	8" - 12"	0.9	3' - 0"
350 - 450	14" - 18"	1.4	4' - 6"
500 - 600	20" - 24"	1.8	6' - 0"
650 - 750	26" - 30"	2.3	7' - 6"
800 - 900	32" - 36"	2.7	9' - 0"

NOTE:
FLEXIBLE PIPES ARE PVC.
FOR ALL OTHER PIPES USE THE
STANDARD TRENCH WIDTH (SS 01).

METRIC UNITS ARE IN MM WITH ENGLISH UNITS IN PARENTHESIS, UNLESS INDICATED OTHERWISE.

WATER TABLE CRADLE FOR FLEXIBLE PIPE

City Engineer Approval:		CITY OF NORMAN, OKLAHOMA	
Approval Date:	Revision Date: 1-30-2006	Rev. No. 1	DRAWING NO. SS 06

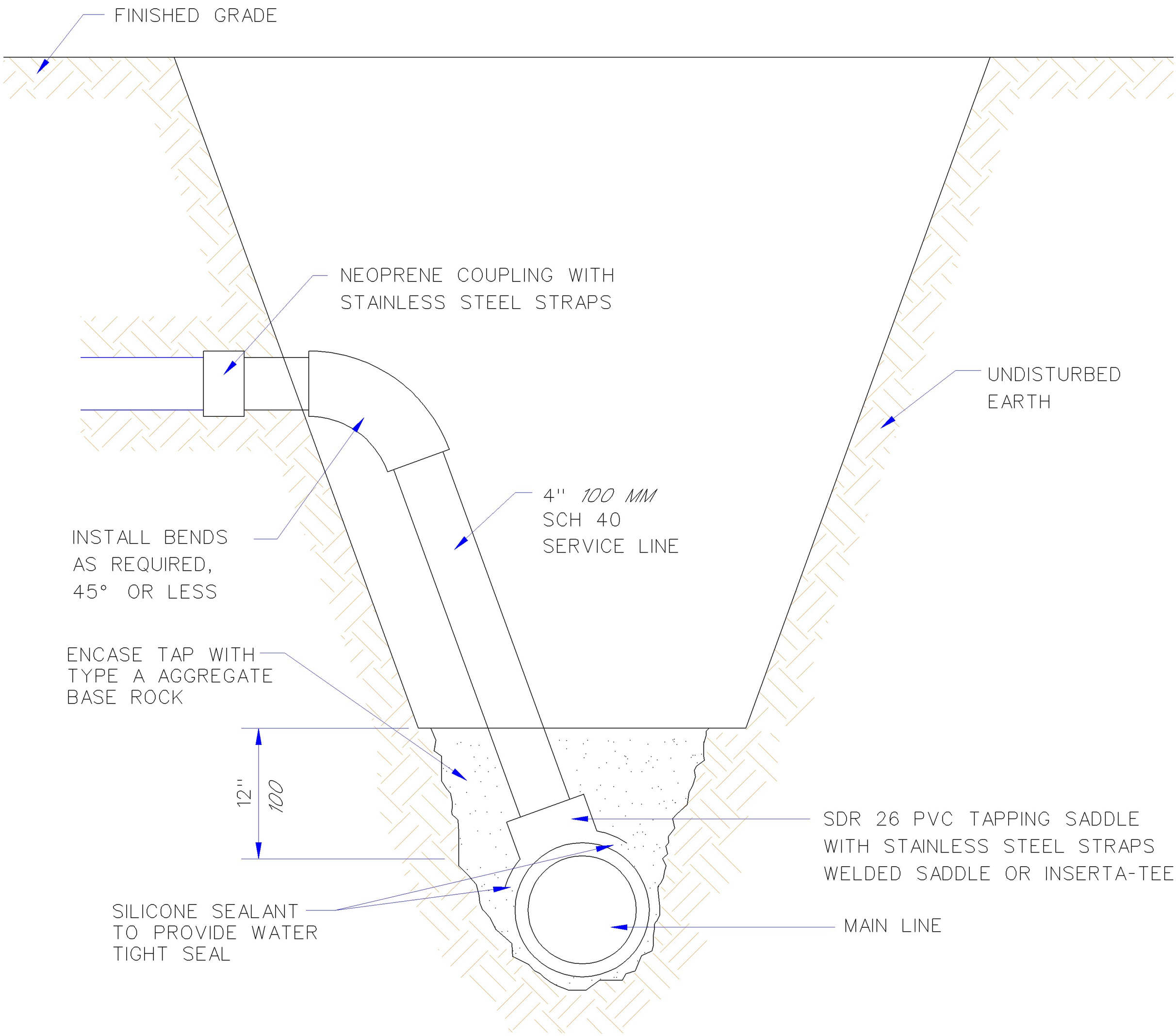

NOTES:

1. ALL MAIN LINE HOLES TO BE SAWED OR DRILLED AND COUPON PRESENTED AT TIME OF INSPECTION.
2. TAPS SHALL BE LEFT UNCOVERED UNTIL TAP IS INSPECTED.
3. THE CONTRACTOR SHALL DRILL OR SAW A 4" DIAMETER HOLE INTO THE EXISTING SEWER MAIN.
4. THERE SHALL BE A MINIMUM OF 2" FROM THE EDGE OF THE HOLE TO THE OUTSIDE EDGE OF THE TAPPING SADDLE.
5. ON AN EXISTING TAP THAT IS BEING REPAIRED, IF THE HOLE IS LARGER THAN 4" DIAMETER OR THE PIPE IS IN POOR CONDITION, THEN THAT SECTION OF SANITARY SEWER PIPE SHALL BE REPLACED. SAID PIPE SHALL BE REPLACED WITH SDR 35 PVC TO A POINT UNTIL SOUND PIPE IS FOUND. THE MINIMUM LENGTH OF PIPE TO BE REPLACED IS 4 FEET.
6. FOR CLAY PIPE ONLY, A FLEXIBLE SADDLE MAY BE USED. THE SADDLE SHALL BE A DFW/HPI FLEXIBLE SADDLE AS MANUFACTURED BY "DFW QUALITY PRODUCTS BY NDS" OR EQUAL. WHEN INSTALLING A FLEXIBLE SADDLE, THE ABOVE REQUIREMENTS STILL APPLY.

METRIC UNITS ARE IN MM AND SHOWN IN ITLALICS, UNLESS INDICATED OTHERWISE.

TAPPING AN EXISTING SANITARY SEWER LINE

City Engineer Approval:		CITY OF NORMAN, OKLAHOMA	
Approval Date:	Revision Date: 5-01-2001	Rev. No. 3	DRAWING NO. SS 07a

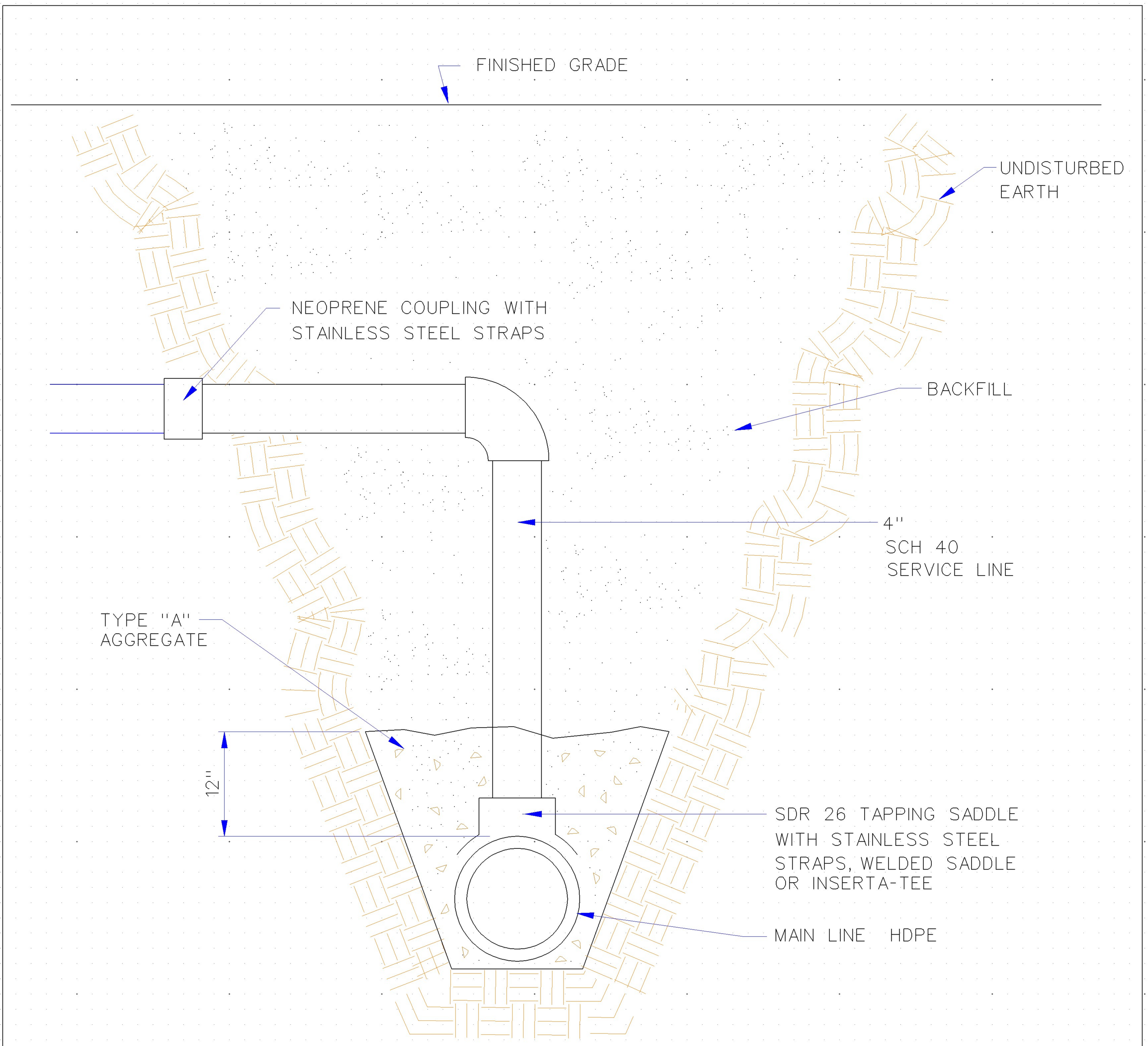

NOTES:

1. ALL MAIN LINE HOLES TO BE SAWED OR DRILLED AND COUPON PRESENTED AT TIME OF INSPECTION.
2. TAPS SHALL BE LEFT UNCOVERED UNTIL TAP IS INSPECTED.
3. TAPS SHALL BE MADE VERTICAL.

TAPPING A HDPE SANITARY SEWER LINE (VERTICAL)

City Engineer Approval:		CITY OF NORMAN, OKLAHOMA	
Approval Date:	Revision Date: 4-24-2006	Rev. No. 1	DRAWING NO. SS 07b

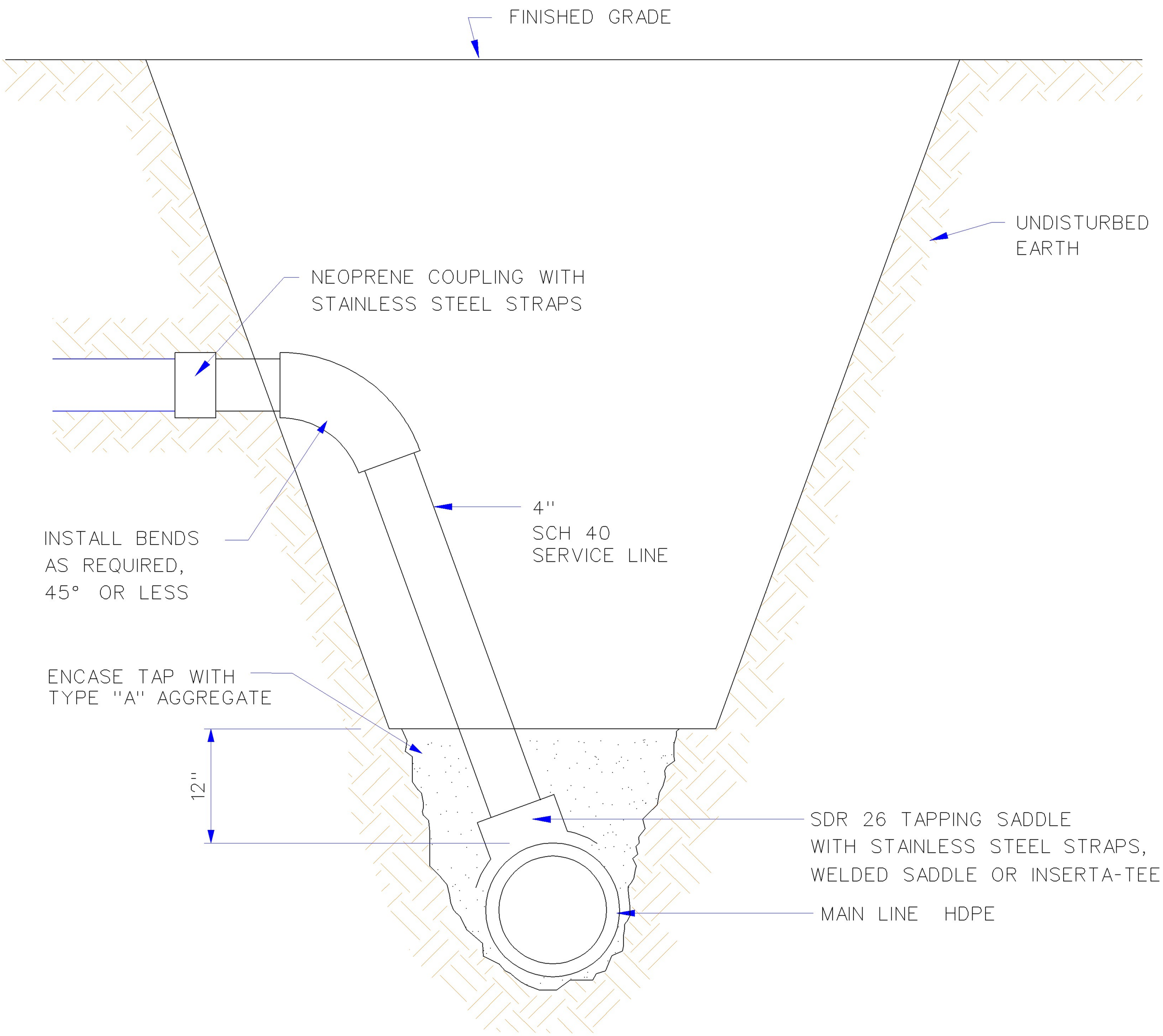

NOTES:

1. ALL MAIN LINE HOLES TO BE SAWED OR DRILLED AND COUPON PRESENTED AT TIME OF INSPECTION.
2. TAPS SHALL BE LEFT UNCOVERED UNTIL TAP IS INSPECTED.

TAPPING A HDPE SANITARY SEWER LINE

City Engineer Approval:		CITY OF NORMAN, OKLAHOMA	
Approval Date:	Revision Date: 4-17-2006	Rev. No. 1	DRAWING NO. SS 07c

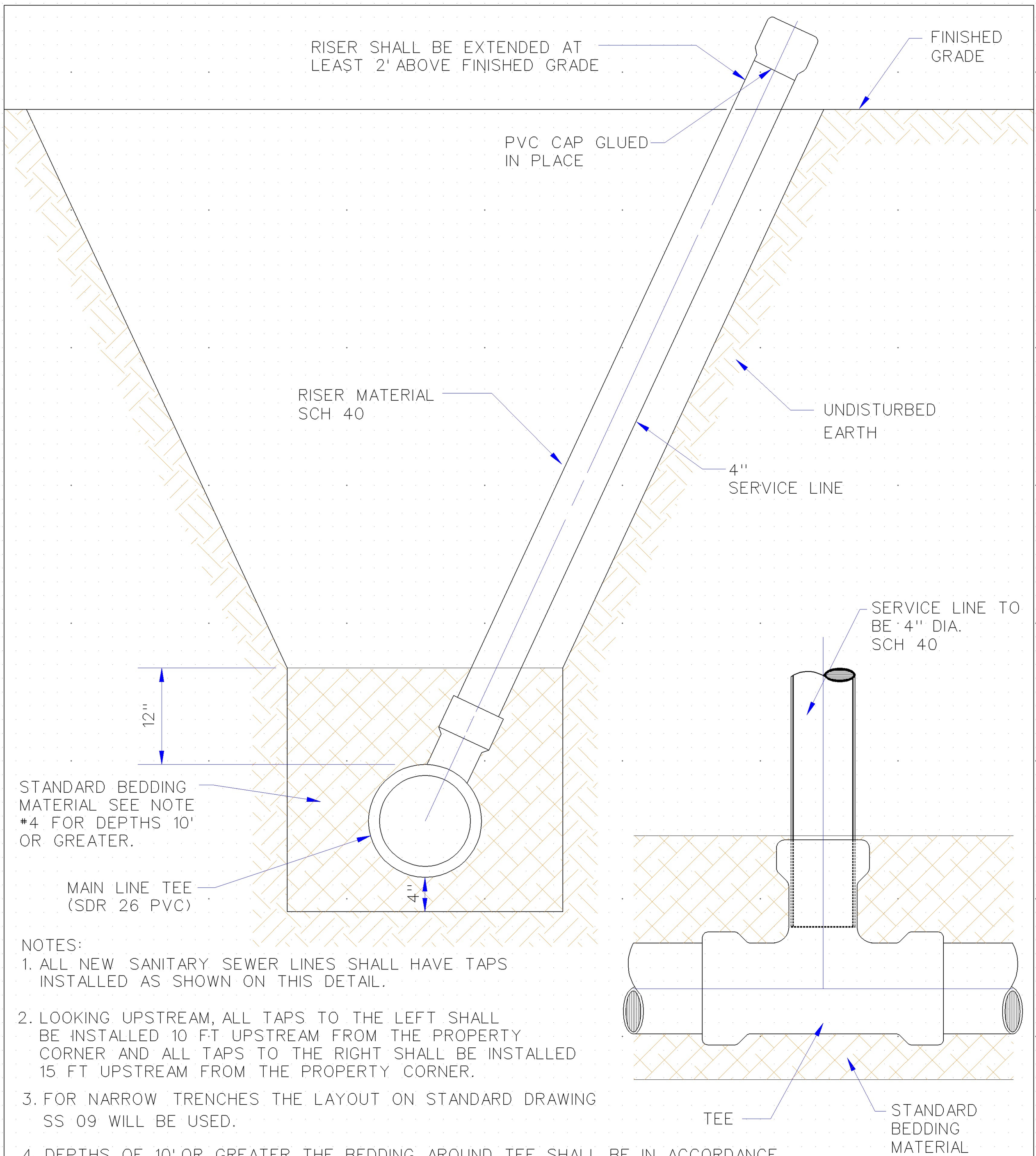

NOTES:

1. ALL NEW SANITARY SEWER LINES SHALL HAVE TAPS INSTALLED AS SHOWN ON THIS DETAIL.
2. LOOKING UPSTREAM, ALL TAPS TO THE LEFT SHALL BE INSTALLED 10 FT UPSTREAM FROM THE PROPERTY CORNER AND ALL TAPS TO THE RIGHT SHALL BE INSTALLED 15 FT UPSTREAM FROM THE PROPERTY CORNER.
3. FOR NARROW TRENCHES THE LAYOUT ON STANDARD DRAWING SS 09 WILL BE USED.
4. DEPTHS OF 10' OR GREATER THE BEDDING AROUND TEE SHALL BE IN ACCORDANCE WITH THE MANUFACTURERS RECOMMENDATIONS.

SANITARY SEWER TAP AND RISER

City Engineer Approval:		CITY OF NORMAN, OKLAHOMA	
Approval Date:	Revision Date: 5-02-2006	Rev. No. 4	DRAWING NO. SS 08

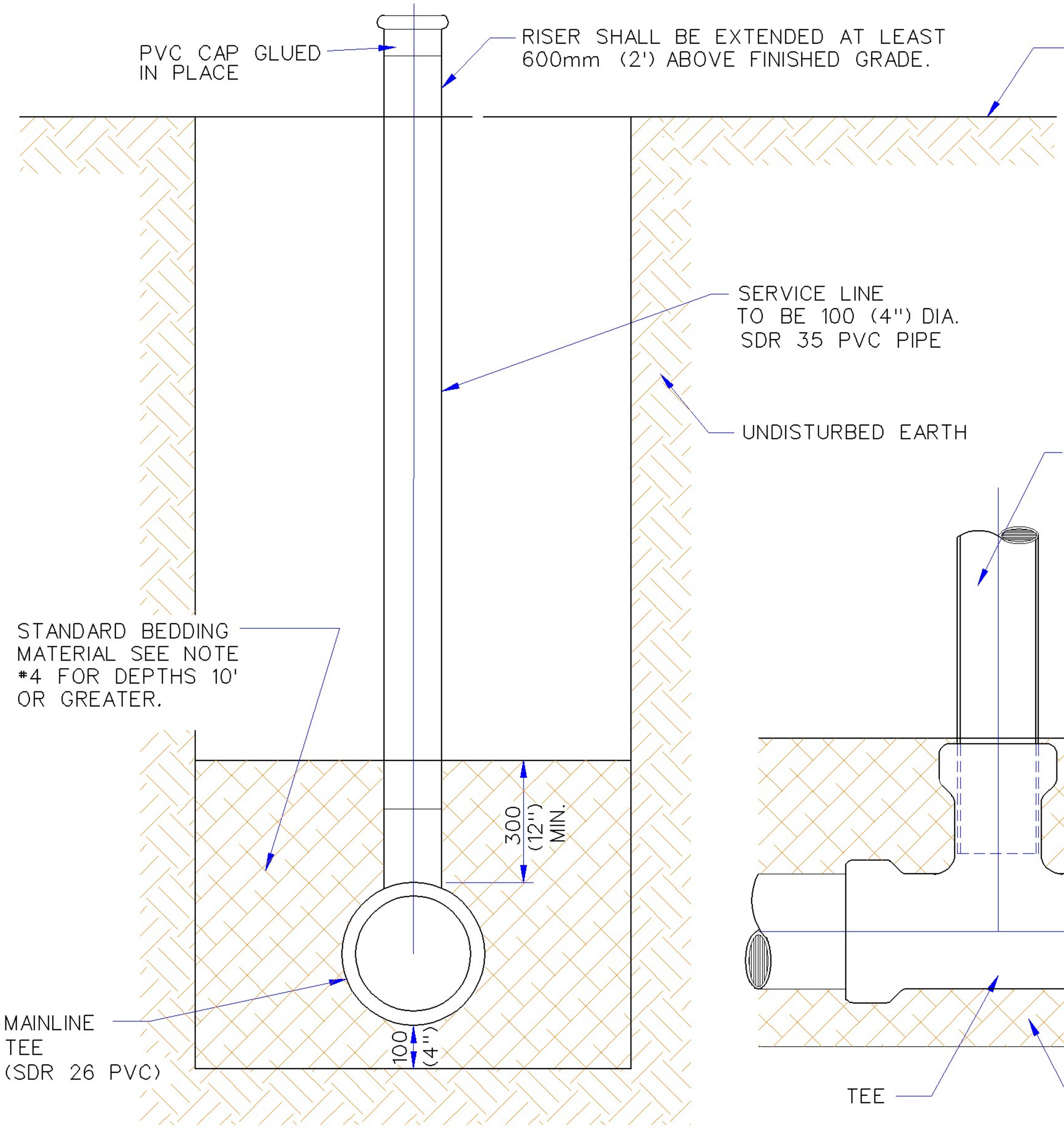

NOTES:

1. ALL NEW SANITARY SEWER LINES SHALL HAVE TAPS INSTALLED AS SHOWN ON THIS DETAIL.
2. LOOKING UPSTREAM, ALL TAPS TO THE LEFT SHALL BE INSTALLED 10 FT UPSTREAM FROM THE PROPERTY CORNER AND ALL TAPS TO THE RIGHT SHALL BE INSTALLED 15 FT UPSTREAM FROM THE PROPERTY CORNER.
3. FOR WIDE TRENCHES THE LAYOUT ON STANDARD DRAWING SS 08 WILL BE USED.
4. DEPTHS OF 10' OR GREATER THE BEDDING AROUND TEE SHALL BE IN ACCORDANCE WITH THE MANUFACTURERS RECOMMENDATIONS.

METRIC UNITS ARE IN MM WITH ENGLISH UNITS IN PARENTHESIS, UNLESS INDICATED OTHERWISE.

SANITARY SEWER TAP AND RISER (NARROW TRENCH)

City Engineer Approval:		CITY OF NORMAN, OKLAHOMA	
Approval Date:	Revision Date: 12-08-2000	Rev. No. 2	DRAWING NO. SS 09

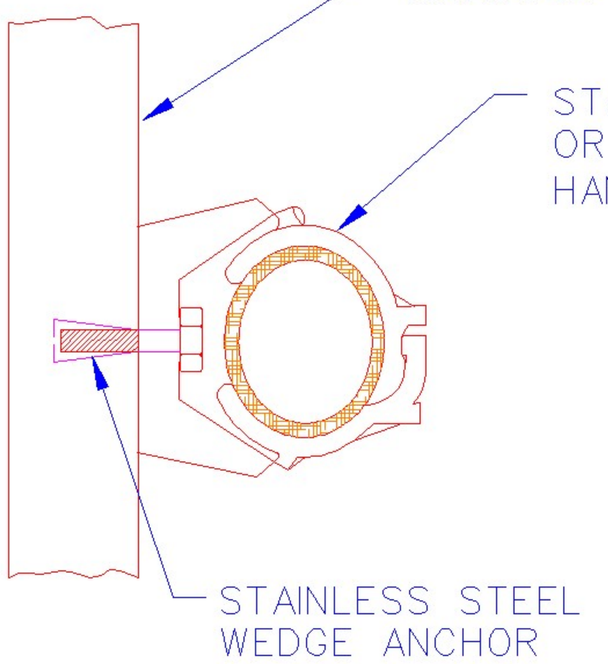

SECTION A-A

NOT TO SCALE

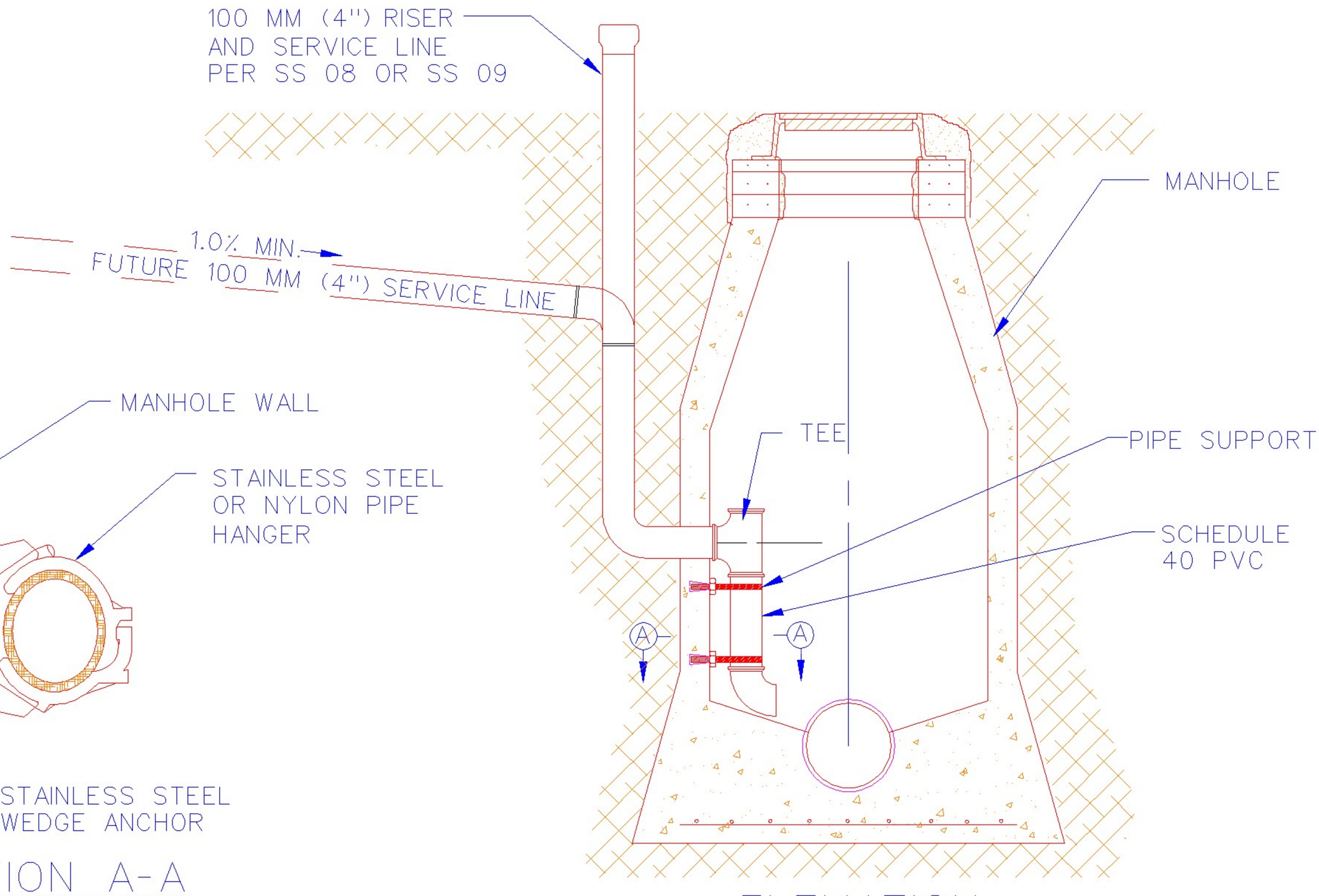

ELEVATION

NOT TO SCALE

NOTE:
DROP TYPE TAP IS REQUIRED WHEN DISTANCE FROM SERVICE LINE FLOW LINE TO MANHOLE FLOW LINE EXCEEDS 0.6 M (2').

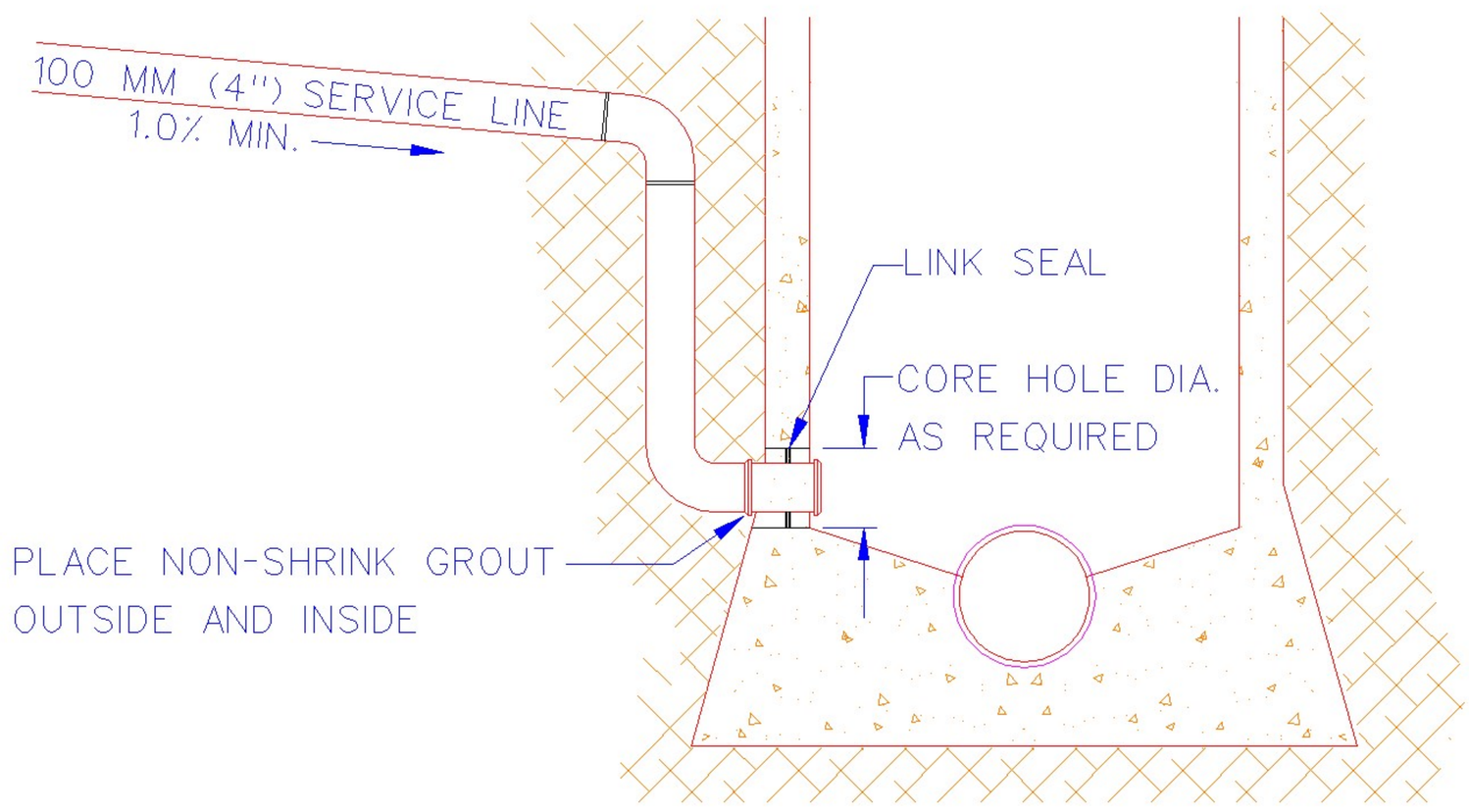

TAP OF EXISTING MANHOLE

NOT TO SCALE

METRIC UNITS ARE IN MM WITH ENGLISH UNITS IN PARENTHESIS, UNLESS INDICATED OTHERWISE.

SANITARY SEWER TAP AT MANHOLE

City Engineer Approval:		CITY OF NORMAN, OKLAHOMA	
Approval Date:	Revision Date: 11-22-2004	Rev. No. 1	DRAWING NO. SS 10

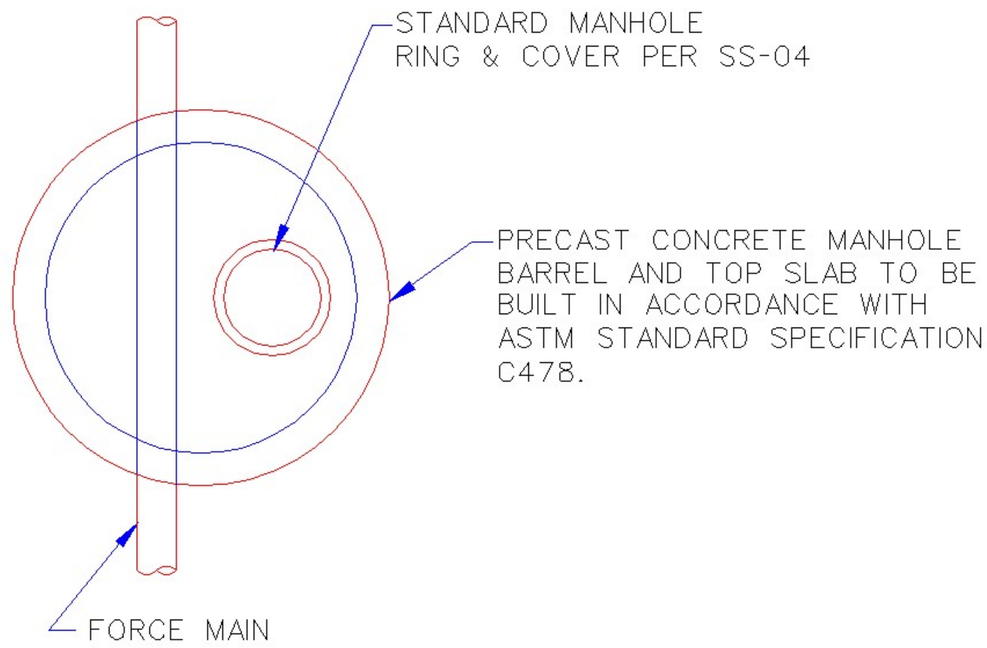

PLAN

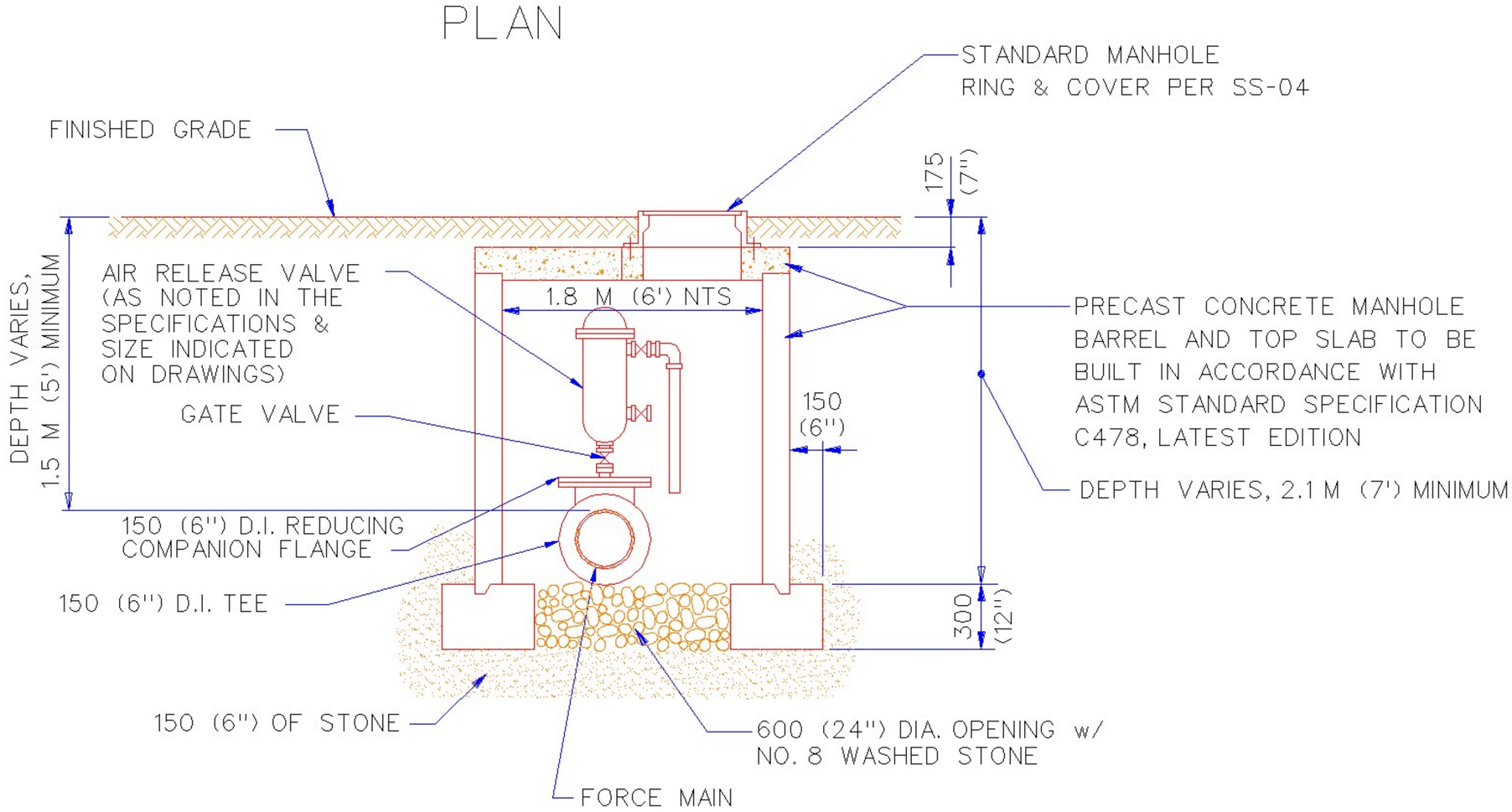

SECTION

METRIC UNITS ARE IN MM WITH ENGLISH UNITS IN PARENTHESIS, UNLESS INDICATED OTHERWISE.

SEWAGE AIR RELIEF VALVE

City Engineer Approval:		CITY OF NORMAN, OKLAHOMA	
Approval Date:	Revision Date:	Rev. No. 0	DRAWING NO. SS 11

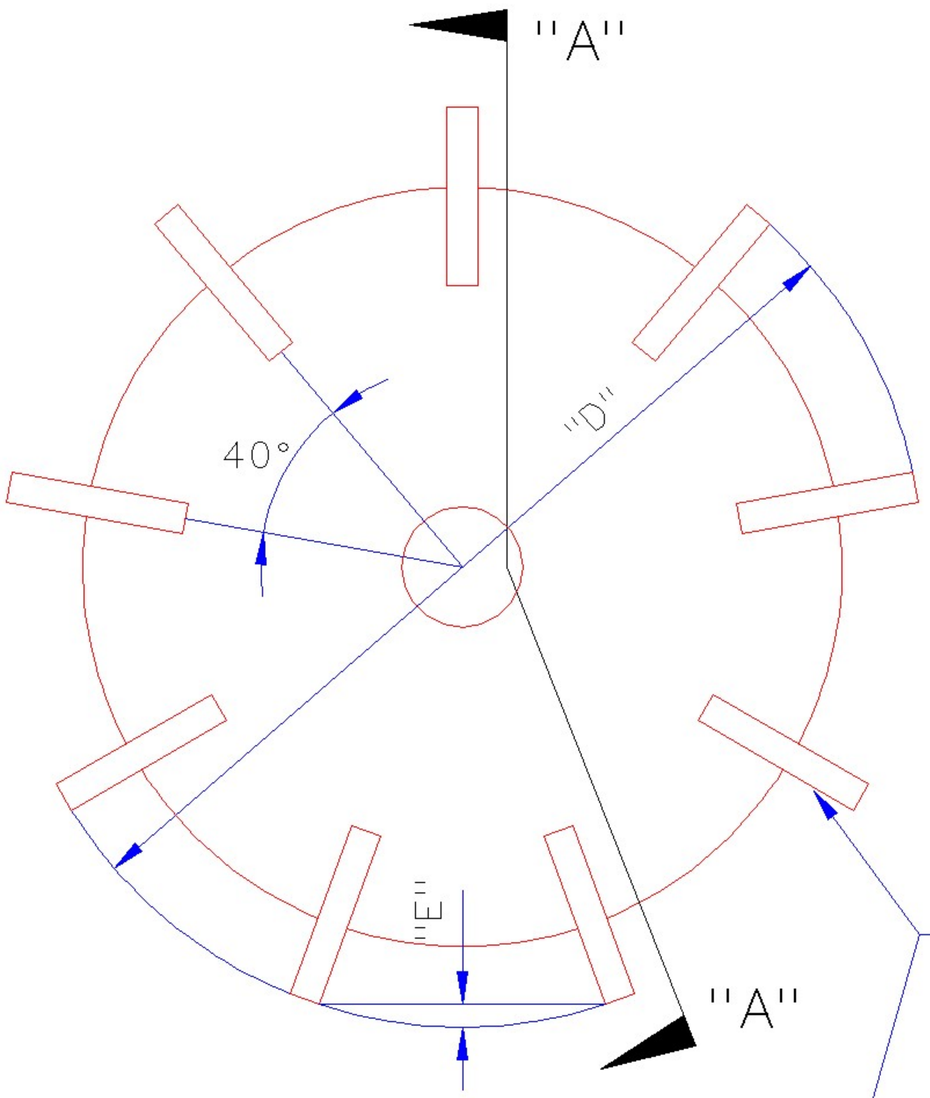

ASTM D 3034 (PSM)							
				4% DEFLECTION		5% DEFLECTION	
NOM. DIA.		"L"		"D" - SDR 35		"D" - SDR 35	
MM	IN.	MM	IN.	MM	IN.	MM	IN.
150	6"	150	6"	143	5.703	141	5.650
200	8"	200	8"	191	7.637	189	7.565
250	10"	250	10"	239	9.546	236	9.456
300	12"	250	10"	284	11.359	281	11.251
375	15"	300	12"	348	13.910	344	13.779

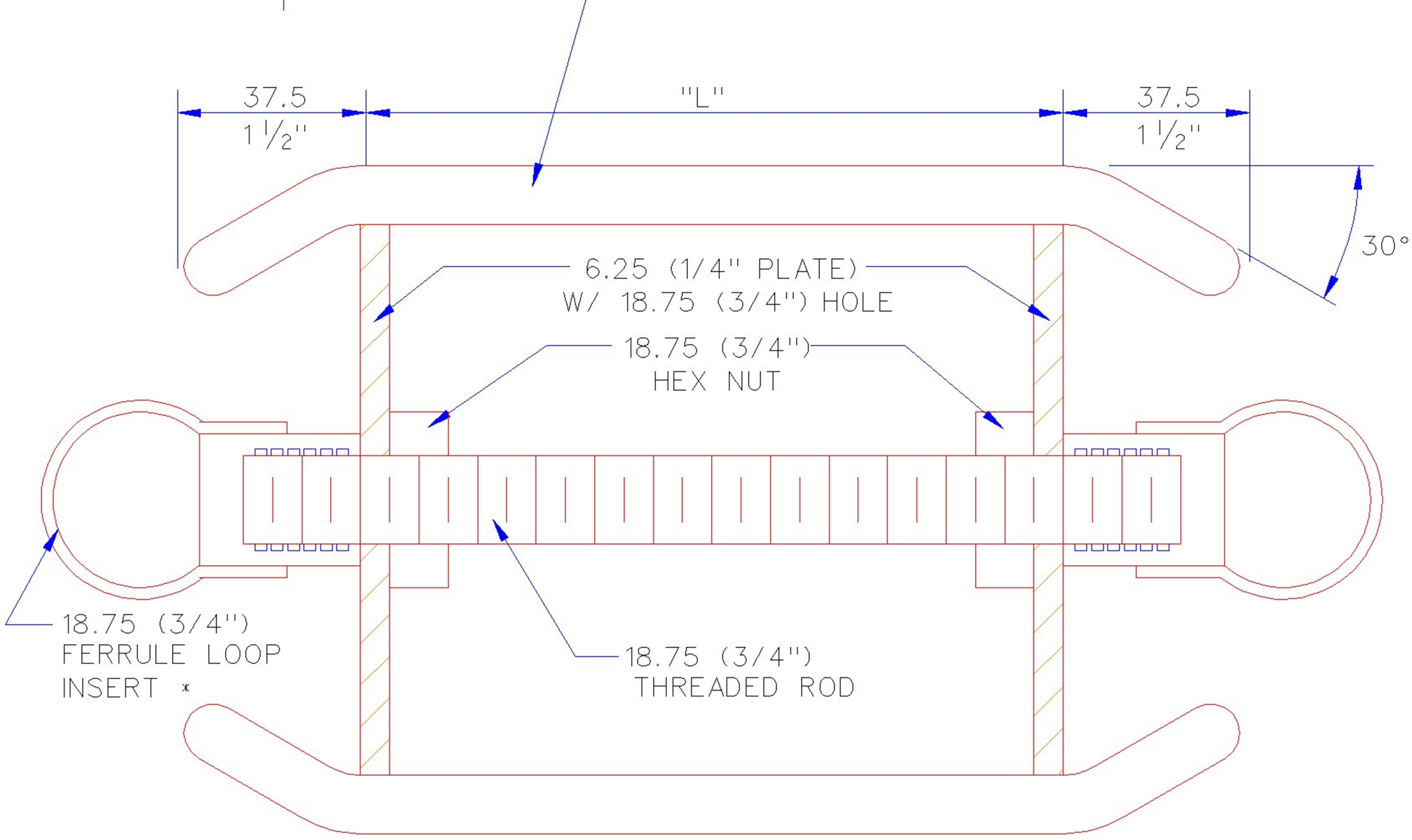

SECTION "A"-"A"

MIN. PLA. DIAMETER
GAGE DIAMETER HAS BEEN CALCULATED TO CORRECT CHORD LENGTH ERROR "E"

NOTES:

1. USE 4% GAGE IF DEFLECTION TEST IS MADE WITHIN 6 MONTHS OF INSTALLATION. USE 5% THEREAFTER
2. MARK ALL GAGES WITH ASTM SPECIFICATION NUMBER, SDR NUMBER AND DEFLECTION.
3. THE 12.5 (1/2") BAR STOCK ON THE EDGE PROVIDES CLEARANCE TO PASS SMALL AMOUNTS OF SOIL WHICH MAY BE IN PIPE.

* BURKE CONCRETE ACCESSORIES INC.

METRIC UNITS ARE IN MM WITH ENGLISH UNITS IN PARENTHESIS, UNLESS INDICATED OTHERWISE.

SEWER DEFLECTION GAGE

City Engineer Approval:		CITY OF NORMAN, OKLAHOMA	
Approval Date:	Revision Date:	Rev. No. 0	DRAWING NO. SS 12

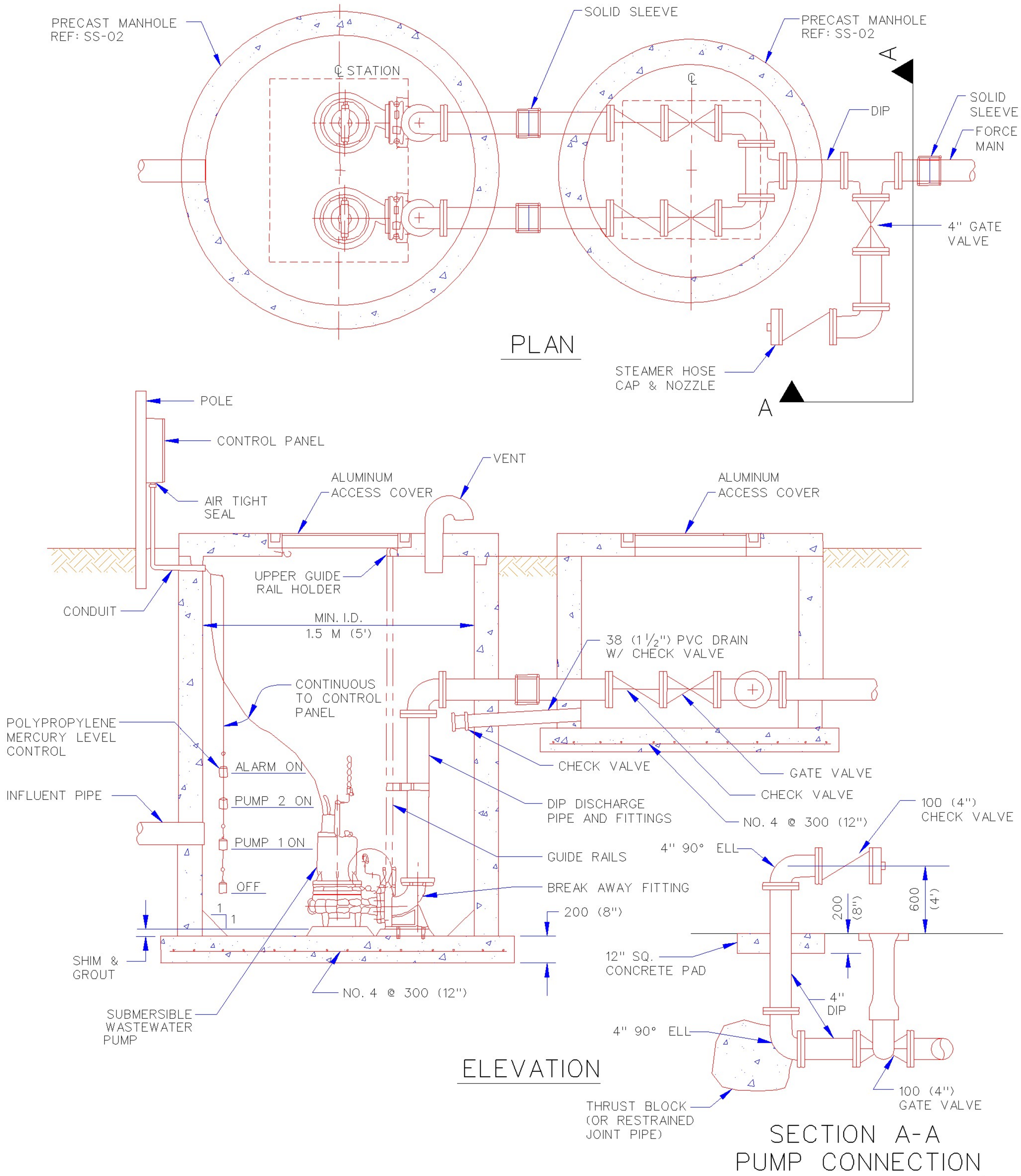

METRIC UNITS ARE IN MM WITH ENGLISH UNITS IN PARENTHESIS, UNLESS INDICATED OTHERWISE.

SUBMERSIBLE LIFT STATION

City Engineer Approval:		CITY OF NORMAN, OKLAHOMA	
Approval Date:	Revision Date:	Rev. No. 0	DRAWING NO. SS 13

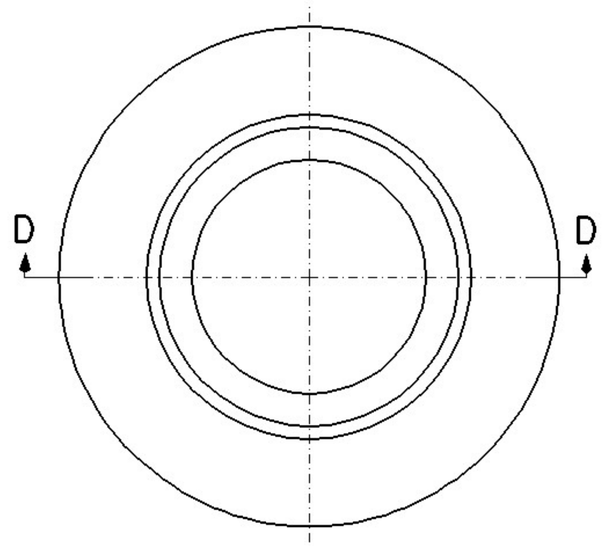

PLAN

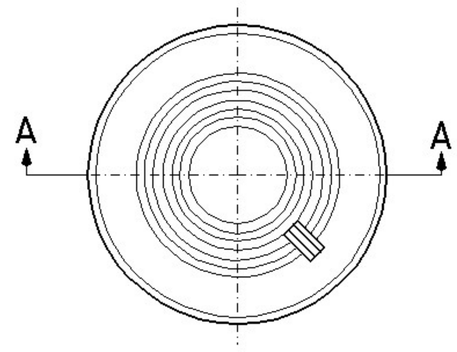

TOP OF COVER

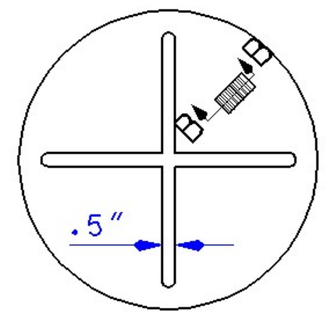

BOTTOM OF COVER

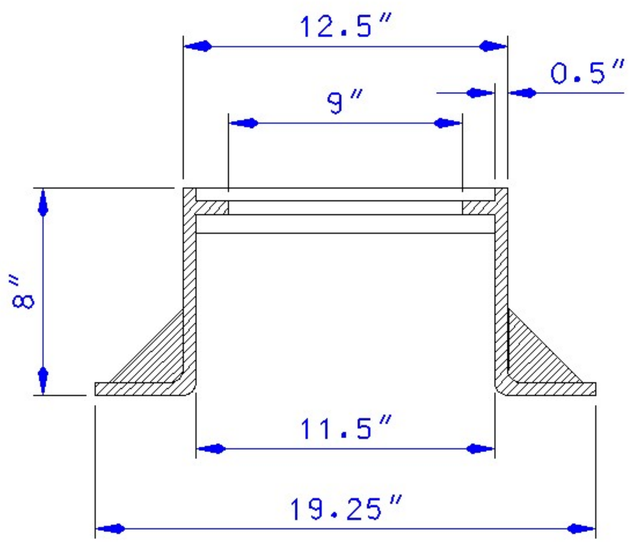

SECTION "D-D"
LAMPHOLE FRAME

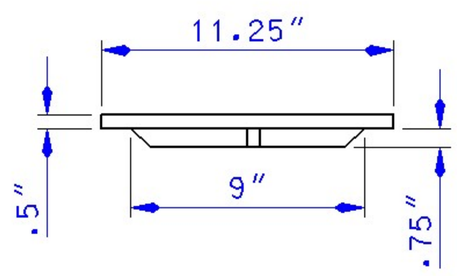

SECTION "A-A"
LAMPHOLE COVER

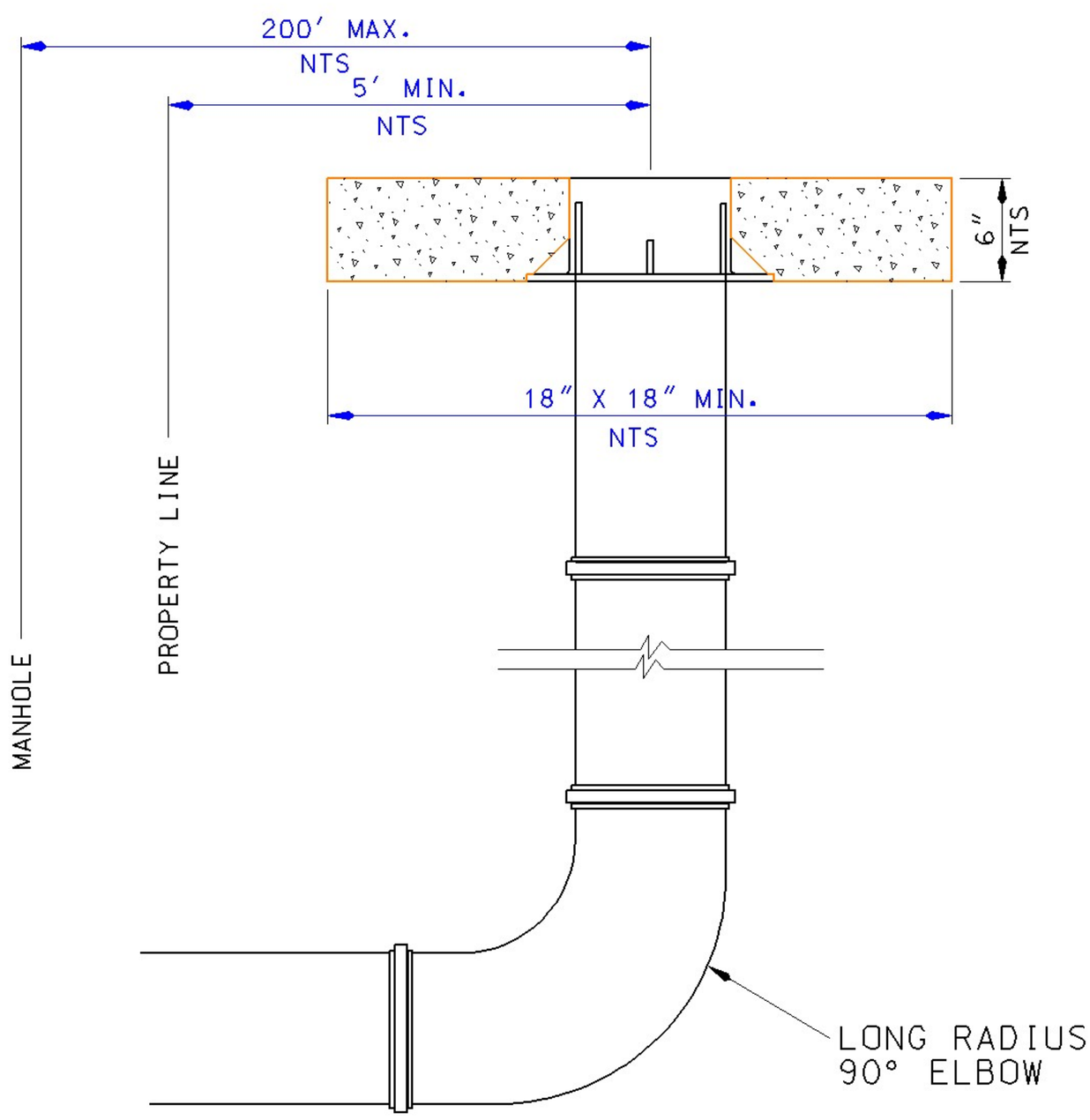

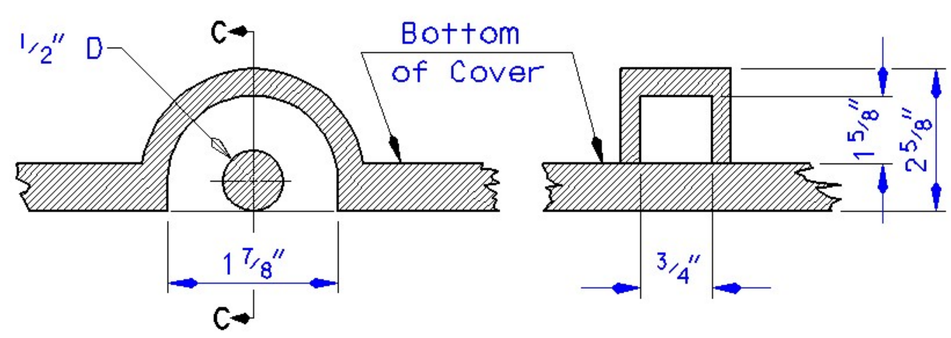

SECTION "B-B"

SECTION "C-C"

LIFTING EYE DETAIL
NTS

SCALE: 1"=1'
UNO

LAMPHOLE DETAILS

City Engineer Approval:		CITY OF NORMAN, OKLAHOMA	
Approval Date:	Revision Date:	Rev. No. 0	DRAWING NO. SS 14

Rev. No. 0

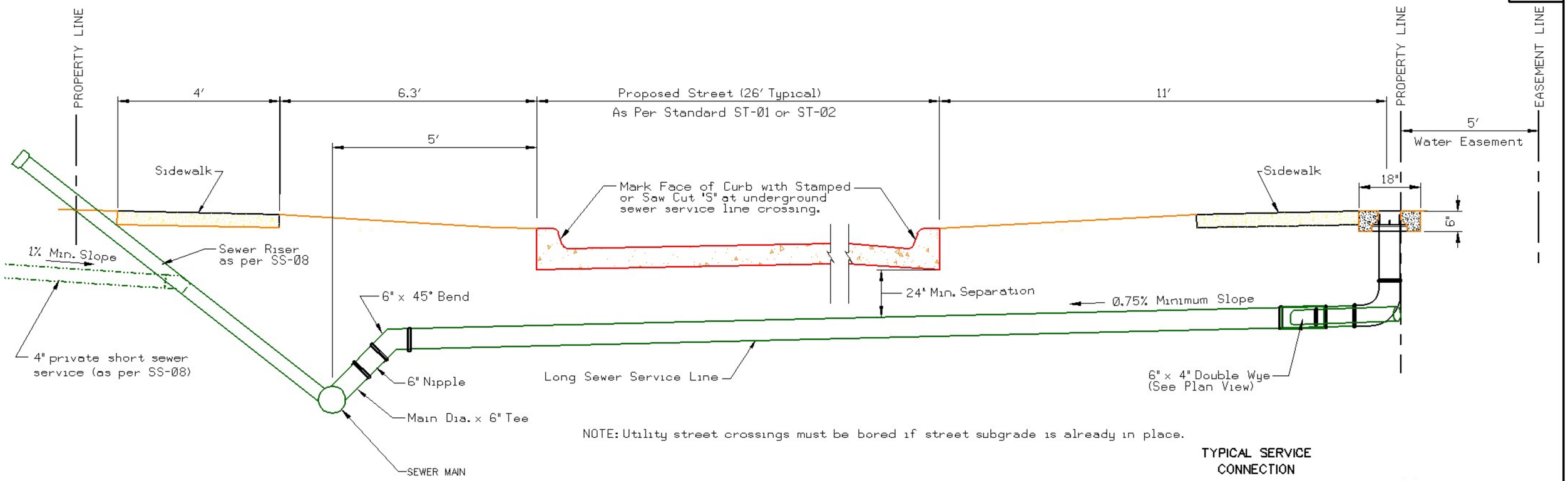

NOTE: Utility street crossings must be bored if street subgrade is already in place.

TYPICAL SERVICE CONNECTION

LOCAL OR COLLECTOR STREET
6" SEWER SERVICE LINE INSTALLATION

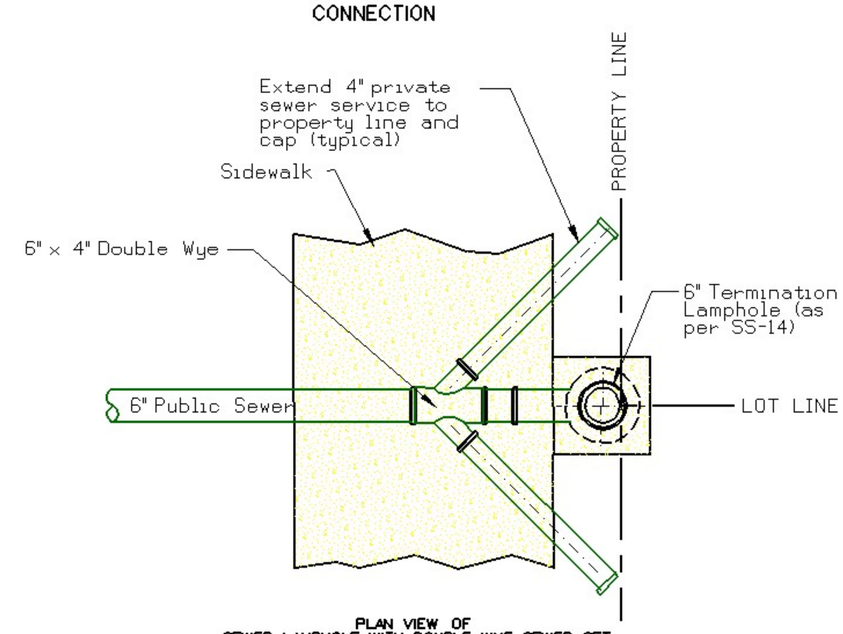

PLAN VIEW OF SEWER LAMPHOLE WITH DOUBLE WYE SEWER SET

NOTES:

1. This standard indicates the desired geometric configuration referenced to street pavings and property lines. The single 6" service line serving two lots is recommended by the city.
2. All sewer service lines and fittings installed within the street right-of-way (ROW) shall be SDR 26 PVC pipe or better.
3. Long sewer services for two adjacent lots shall be provided in one trench. The developer/contractor has the option of installing a single 6-inch diameter public service line with double wye and termination lamphole as detailed herein or two 4-inch private service lines with individual risers at the property line.
4. The minimum vertical separation between the street base and the top of the long sewer service pipe is 24 inches.
5. The minimum vertical grade difference for a 6-inch public sewer service line is 24 inches as measured by subtracting the flow line of the main sewer from the flow line of the termination lamphole.
6. Minimum downward slope of a sewer service line crossing the street ROW is 1.00% for 4-inch pipe and 0.75% for 6-inch pipe.
7. Backfill for sewer services beneath and 2 feet either side of the roadway shall be SBM as per SS-01, or sand.
8. Short service lines shall be constructed as per SS 08 except that the service line shall be extended so that a vertical riser terminates just beyond the property line.
9. Alternate configurations may be installed in lieu of that shown upon approval of the Utilities Engineer.

Engineering Division, City of Norman

6" SEWER SERVICE CONNECTION INSTALLATION

APPROVED BY: _____ DATE _____ BOB HANGER, CITY ENGINEER	DRAWN:	DATE: 11/17/2004	Drawing No: SS-15 PAGE: 4000 - 94